蘇州佳世達 DQ9

承認書

客戶 : DIVA
料號 : 2BAD6930032 (M3537)
品名 : REAR COVER ASSY (QD2 21.5" BLACK)
日期 : 2026/06/08

QISDA No.:6K.6G701.001

設計驗證
工程課
2026 -06- 08
發行
蘇達科技開發股份有限公司

REV.	DATE	DESCRIPTION	BY	APVD
A	2025/10/8	RRODUCTION RELEASE	Owen	Laslie
B	2026/4/13	CHANGE CONTROL DIMENSIONS & TOLERANCES △A	Owen	Laslie

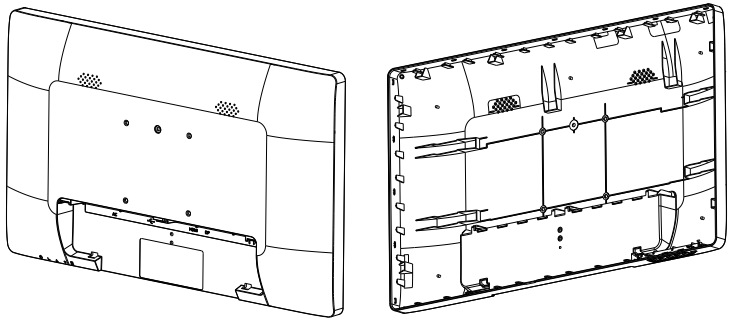

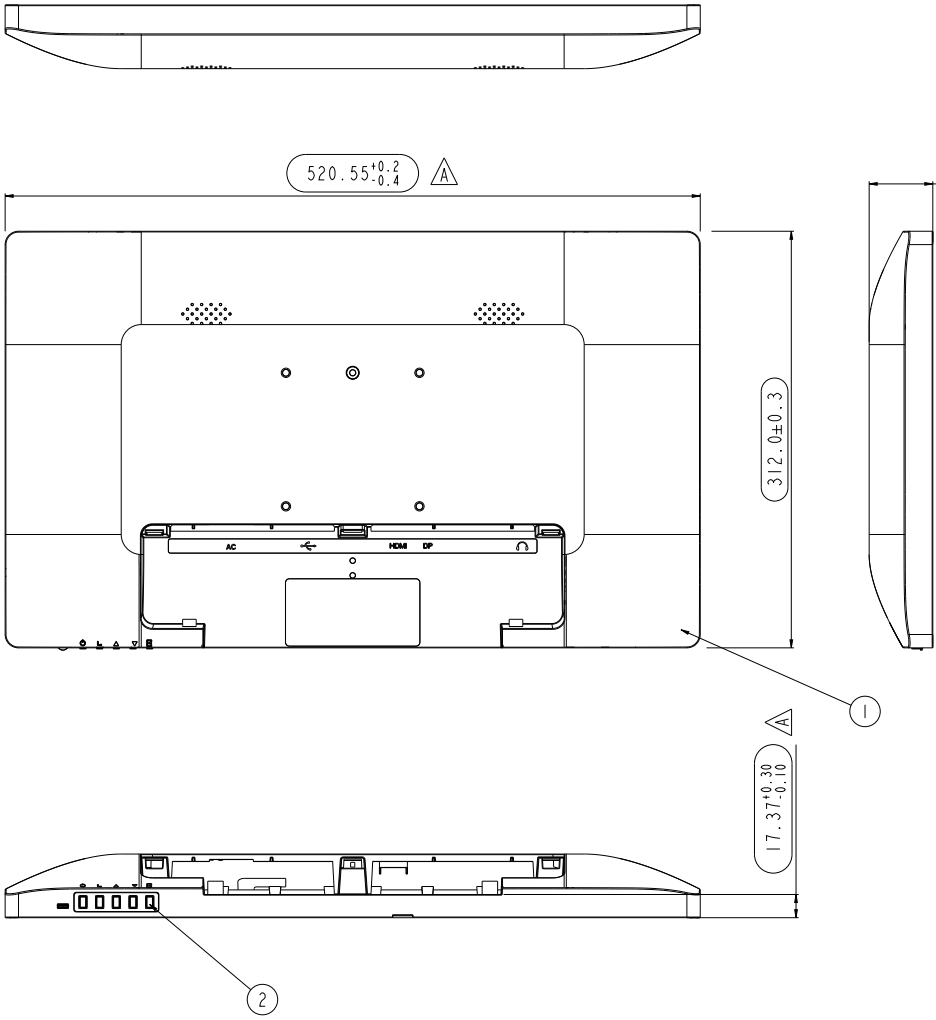

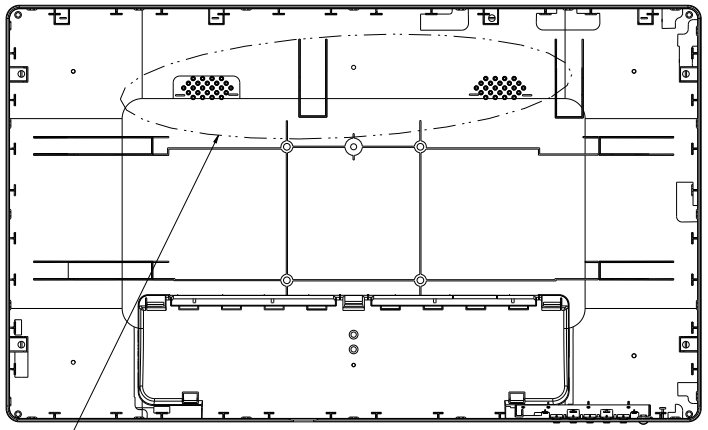

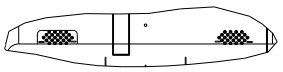

THROUGH HOLE

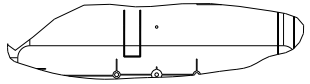

BLIND HOLE

ITEM NO	DESC	QTY
2	KEY BUTTON	1
1	REAR COVER	1

設計驗證
工程課
2026-06-08
發行

REAR COVER ASSY						
ITEM NO	QISDA P/N	QISDA DESCRIPTION	DIVA P/N	DIVA DESCRIPTION	CHANGE CORE	CORE P/N
1	6K.6G701.001	ASSY REAR COVER QD2181AI-P	2BAD6930032	REAR COVER ASSY (QD2 21.5" BLACK)	THROUGH HOLE	BN8/BN9
2	6K.6G701.011	ASSY REAR COVER WHITE QD2181AI-P	2BAD7110032	REAR COVER ASSY (QD2 21.5" WHITE)	THROUGH HOLE	BN8/BN9
3	6K.6G703.001	ASSY REAR COVER BVH QD2181AI-P	N/A	N/A	BLIND HOLE	BN10/BN11

RANGE OF DIMENSION	TOLERANCE CLASS DESIGNATION V		
	fine	medium	coarse
UP TO 3	±0.05	±0.1	±0.2
OVER 3~6	±0.05	±0.1	±0.3
OVER 6~30	±0.1	±0.2	±0.5
OVER 30~120	±0.15	±0.3	±0.8
OVER 120~400	±0.2	±0.5	±1.2
OVER 400~1000	±0.3	±0.8	±2.0
OVER 1000~2000	±0.5	±1.2	±3.0
OVER 2000~4000	-	±2.0	±8.0
ANGLE ±1° (±1.75/100)			

THIRD ANGLE PROJECTION

UNITS: mm | SCALE: 1/2 | SHEET: 1 OF 3 | MODEL NO.: QD11.21.5"

MATERIAL: | TREATMENT:

DSGD by	Owen	Oct-8-25
CHK by		
APVD by	Laslie	Oct-8-25

PART NAME: ASSY REAR COVER

DIVA P/N: SEE TABLE

Qisda NO.: SEE TABLE

APVD NO.:

3D FILE NAME: 00215.000.REAR.COVER.QD2.IP65

DIVA Laboratories ,Ltd.

REV.	DATE	DESCRIPTION	BY	APVD
A	2025/9/18	PRODUCTION RELEASE	Owen	Laslie
B	2026/4/13	CHANGE CONTROL DIMENSIONS & TOLERANCES ⚠	Owen	Laslie

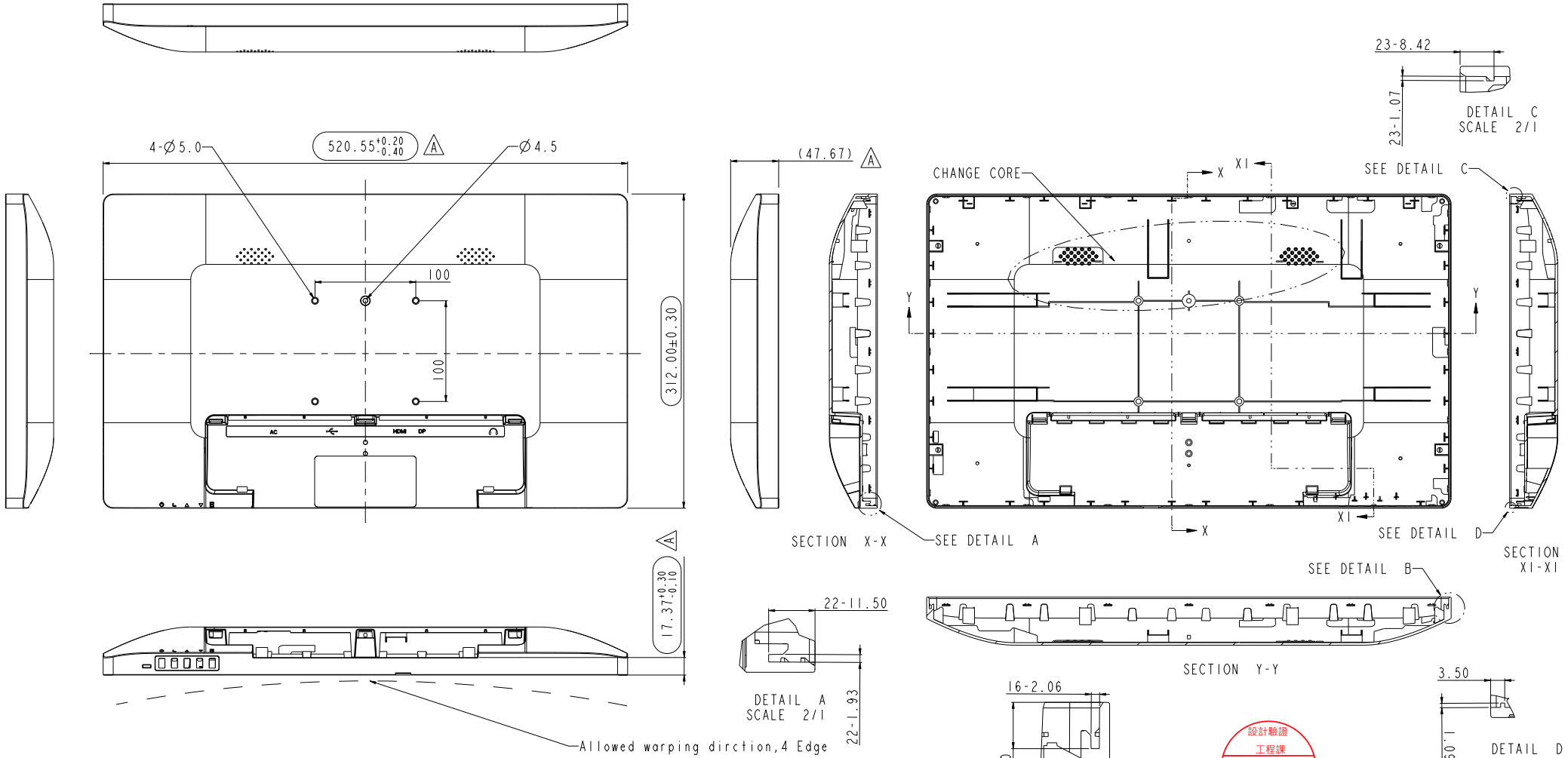

QISDA P/N	QISDA DESCRIPTION	DIVA P/N	DIVA DESCRIPTION	CHANGE CORE	CORE P/N
3J.6G701.B01	RC TOOLING QD 2181A1-P	N/A	N/A	N/A	N/A
3J.6G701.B11	RC QD2181A1-P	3MD693P2010	REAR COVER (BLACK QD2_21.5")	THROUGH HOLE	BN8/BN9
3J.6G701.B21	RC WHITE QD2181A1-P	3MD693P2020	REAR COVER (WHITE QD2 21.5")	THROUGH HOLE	BN8/BN9
3J.6G702.B11	RC BVH QD2181A1-P	3MD693P2030	REAR COVER (BLACK QD2_21.5",BVH)	BLIND HOLE	BN10/BN11

NOTES:
1.MATERIAL:PC+ABS,Bayblend FR3010 HF
2.RESIN COLOR:
2-1.DI8007-R(APPROX.RAL 9004).
2-2.90273 WHITE(APPROX.RAL 9003)
3.TEXTUER:MT-11010.
4.GENERALLY THINKNESS:2.5mm.
5.WARPAGE AND FLANTNE4SS:<1.2mm.
6.◯ INSPECTION dIMENSION.
7.UNSPECIFIED dIMENSION REFER TO CAD DRAWING fILE.
8.DIVA QC INSPECTION DOCUMENT NO.:QWI-020(PLASTIC)

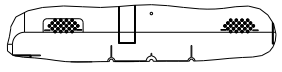
THROUGH HOLE

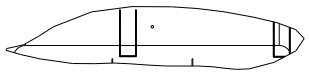
BLIND HOLE

設計驗證
工程課
2026-06-08
發行

RANGE OF DIMENSION	TOLERANCE CLASS DESIGNATION V		
	fine	medium	coarse
UP TO 3	±0.05	±0.1	±0.2
OVER 3-6	±0.05	±0.1	±0.3
OVER 6-30	±0.1	±0.2	±0.5
OVER 30-120	±0.15	±0.3	±0.8
OVER 120-400	±0.2	±0.5	±1.2
OVER 400-1000	±0.3	±0.8	±2.0
OVER 1000-2000	±0.5	±1.2	±3.0
OVER 2000-4000	-	±2.0	±8.0
ANGLE ±1° (±1.75/100)			

THIRD ANGLE PROJECTION

UNITS: mm	SCALE: 1/2	SHEET: 2 OF 3	MODEL NO.: QD11.21.5
MATERIAL: PC+ABS		TREATMENT:	
DSGD by	Owen	Sep-18-25	PART NAME: REAR COVER
CHK by			DIVA P/N: See table
APVD by	Laslie	Sep-18-25	Qisda NO.: See table
APVD NO.:		3D FILE NAME: 00215.000.REAR.COVER.QD2.IP65	DIVA Laboratories ,Ltd.

REV.	DATE	DESCRIPTION	BY	APVD
A	2025/7/10	PRODUCTION RELEASE	Rex	Laslie

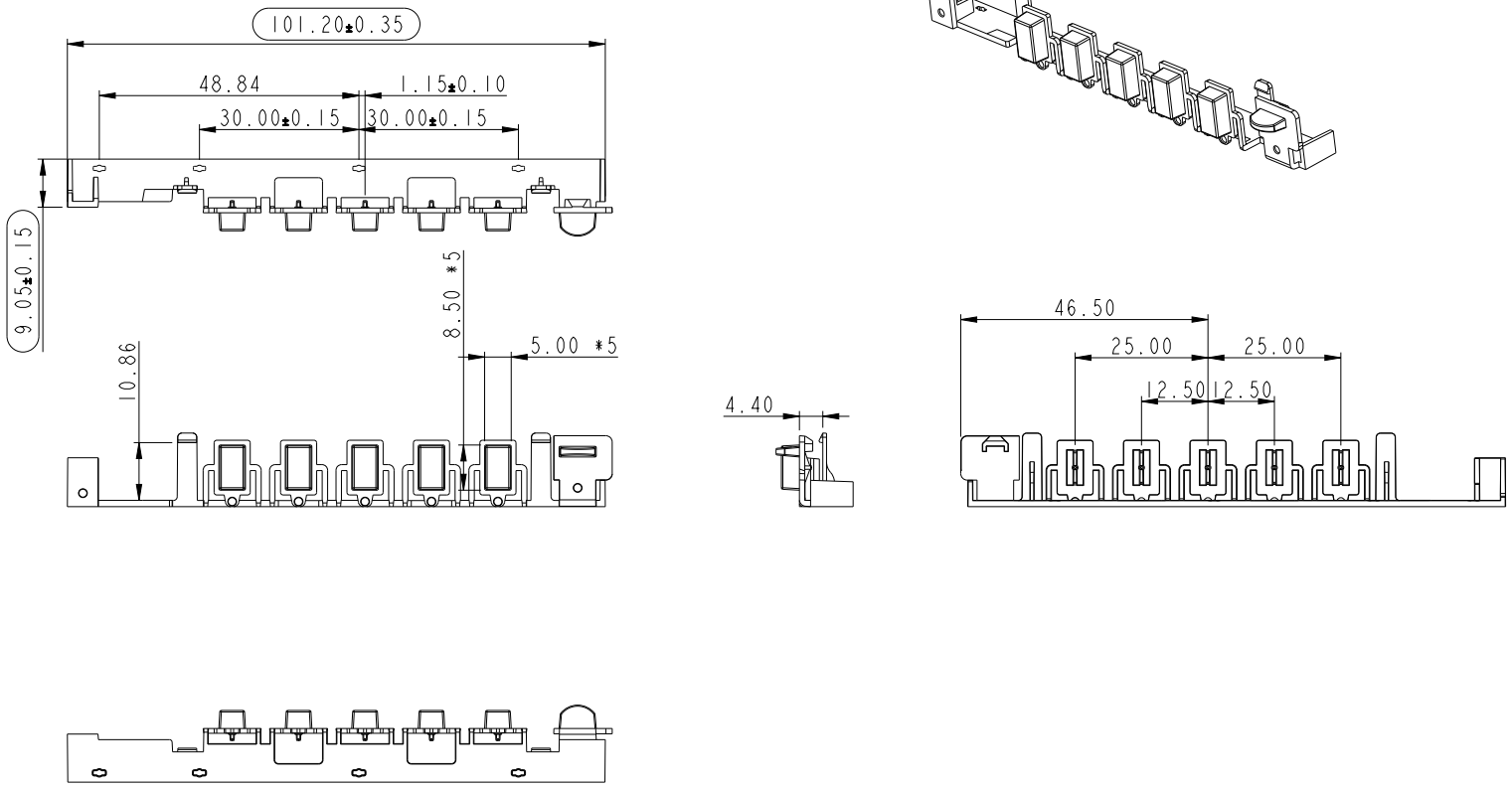

NOTES:
1.MATERIAL:PC 121R
COLOR: TRANSLUCENT
2.RoHS COMPLIANT.
3.DIVA QC INSPECTION DOCUMENT
NO.:QWI-020 (PLASTIC)

設計驗證
工程課
2026-06-08
發行

RANGE OF DIMENSION	TOLERANCE CLASS DESIGNATION			
	V			
	fine	medium	coarse	Rubber/Sponge/Mylar/Gasket
0.5 UP TO 3	±0.05	±0.1	±0.2	±0.2
OVER 3~6	±0.05	±0.1	±0.3	±0.2
OVER 6~30	±0.1	±0.2	±0.5	±0.25
OVER 30~120	±0.15	±0.3	±0.8	±0.3
OVER 120~400	±0.2	±0.5	±1.2	±0.5
OVER 400~1000	±0.3	±0.8	±2.0	±0.8
ANGLE ±1° (±1.75/100)				

THIRD ANGLE PROJECTION

DSGD by	Rex Tseng	Jul-10-25	
CHK by	Owen	Jul-10-25	
APVD by	Laslie	Jul-10-25	

APVD NO.:

3D FILE NAME: 00215.000.REAR_COVER.QD2.IP65

UNITS: mm	SCALE: 1/1	SHEET: 3 OF 3	MODEL NO.: QD11.23.8*
MATERIAL: PC		TREATMENT:	MT-11010
PART NAME:	KEY FOB(QD2)		
DIVA P/N:	3MD693P4010		
Qisda NO.:	4B.6G601.B11		

DIVA Laboratories ,Ltd.

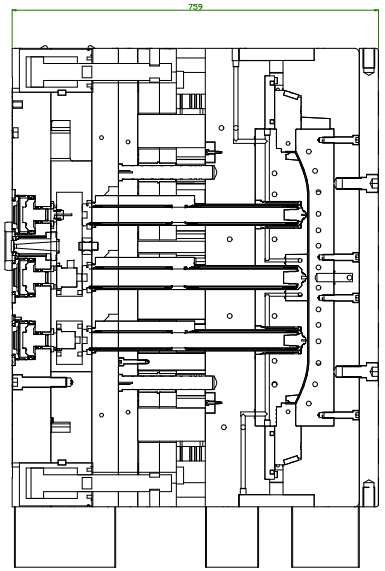

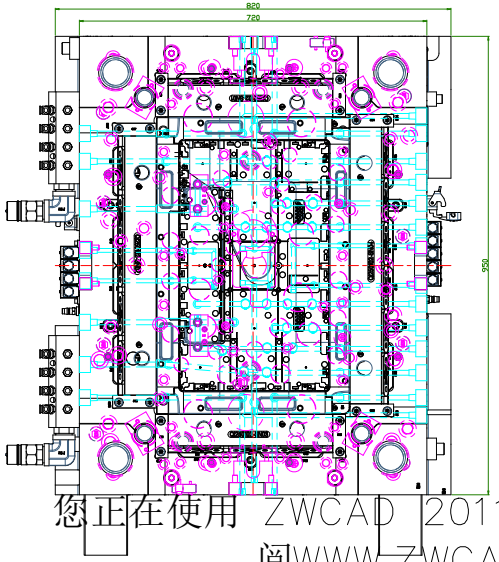

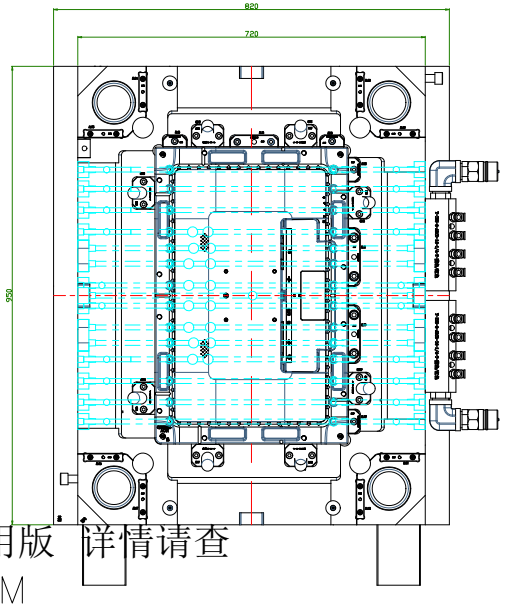

您正在使用 ZWCAD 2011 试用版 详情请查
阅WWW.ZWCAD.COM

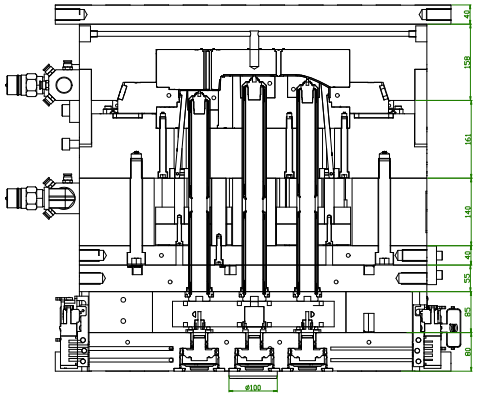

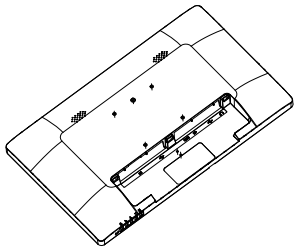

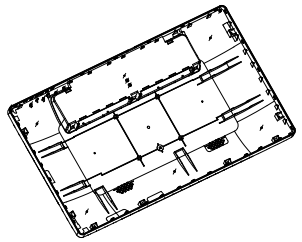

未注公差 0. ±0.2 .0 ±0.1 .00 ±0.01 000 ±0.005	设计	WF	3D		模号	QI250102	比例 1:1
	绘图		塑料	PC+ABS	图名	QD2181AI-P	分机
	校对		缩水率	4.8/1000	品名	REAR-COVER	视角
页次 1/1 版别 A	承认		苏州佳世达				

SA成型条件表

成型厂	DQ9	模具厂	VST0	机台类型	电动	螺杆直径	80	版本：	A
机种	QD2181AL-P	料号	3J.6G701.B11	品名	后壳	机台吨位	650T	机台编号	D12
模号	QI250102	原料型号	PC+ABS	原料颜色	BLACK	模具类型	热流道	成型日期	2025/7/9

成型资讯及参数

温 度 设 定

烘料温度	90℃
烘料时间	4Hrs

段数	射嘴	一段	二段	三段	四段	五段	六段	
温度(℃)	265	265	255	245	235			
模温(℃)	设定	A	B	C	D			
公模	机水	滑块50						
母模	65度							
温控箱温度设定								

成品重量	678G	料头重量	0G
模穴数	1穴		

时序设定		1	2	3	4	5	6	7	8	9
	闭	1.85	2	1.85	1.8	0.25	1.8	0.85	0	1.8
	开	2.5	2.5	2.5	4	4	4	1.5	3.8	1.5

氮气设定		延时	1	2	3	4	5	6	7
	时间								
	压力								

时 间 压 力 速 度 设 定

锁模压力	6100T

射 出	一段	二段	三段	四段	五段	六段
压 力	185	2.3				
速 度	45	50	85	75	45	10
射出位置	150	145	130	60	45	

切换方式	位置			保压切换	50
保 压	一段	二段	三段	四段	射出时间	6S
保压压力	50	60		55	冷却时间	30S
保压时间	1.5	2			成型周期	65S

背压/射终	12/14.15	计量/松退	150/3.5
是否全自动	□是 □否		

水路图

公模 操作侧

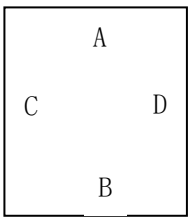

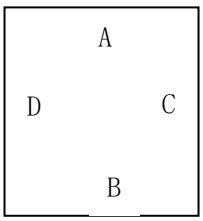

母模 操作侧

佳世达TE审核： 冯浩　　成型主管：梁明　　工程：余新永　　技术员： 王锦兵

Qisda

Dimension Approval Sheet

Model Name:	QD2181AL-P	**Sample Approval Sheet NO.:**	
Part Name:	REAR COVER	**Material:**	PC+ABS Bayblend FR3010
Part Number:	3J.6G701.B11 **REV:** A0	**Color:**	BLACK
Vendor:	DQ9	**Date:**	2026/4/15

Inspection Gauge:

Coordinate Measuring Machine	(CMM)	Micro Scope	(M)	Radius Gauge	
Caliper	(C)	Height Gauge	(HG)	Block Gauge	
Micrometer	(M)	Projector	(P)	Visual	
Pin Gauge	(PG)	Thickness Gauge	(T)	Lever Type Dial Test	

Distribution

R&D	
QC	
Purchase	
Vendor	

Vendor Input | **Low** | **High**

If the Range is Greater Than 50% of the Total Tolerance the Cell will be RED

Item	Dim. Loc.	Gage Code	Cav. No	Spec.	Upper Tol	Lower Tol	Upper Limit	Lower Limit		Sample 1#	Sample 2#	Sample 3#	RD Check	Average	Status	Range	Disposition	Comments
1		C	1	520.55	0.2	0.4	520.85	520.15		520.520	520.580	520.620		520.57333	OK	0.041		调整公差
2		C	2	312	0.3	0.3	312.3	311.7		312.021	312.020	312.010		312.017	OK	0.005		
3		CMM	3	17.37	0.3	0.1	17.67	17.27		17.510	17.470	17.480		17.486667	OK	0.017		变更管控
4		CMM		5	0.05	0.05	5.05	4.95		4.960	4.970	4.980		4.97	OK	0.008		
5		CMM		5	0.2	0.2	5.2	4.8		4.920	4.910	4.930		4.92	OK	0.008		
6		CMM		5	0.2	0.2	5.2	4.8		4.920	4.910	4.910		4.9133333	OK	0.005		
7		CMM		5	0.1	0.1	5.1	4.9		4.920	4.920	4.910		4.9166667	OK	0.005		
8		CMM		4.5	0.1	0.1	4.6	4.4		4.500	4.510	4.490		4.5	OK	0.008		
9		CMM		100	0.15	0.15	100.15	99.85		99.920	99.930	99.970		99.94	OK	0.022		
10		CMM		100	0.15	0.15	100.15	99.85		100.020	100.040	100.020		100.02667	OK	0.009		
11		CMM		8.42	0.1	0.1	8.52	8.32		8.485	8.476	8.469		8.4766667	OK	0.007		
12		CMM		8.42	0.1	0.1	8.52	8.32		8.502	8.514	8.493		8.503	OK	0.009		
13		CMM		8.42	0.1	0.1	8.52	8.32		8.441	8.436	8.429		8.4353333	OK	0.005		
14		CMM		8.42	0.1	0.1	8.52	8.32		8.490	8.481	8.475		8.482	OK	0.006		
15		CMM		8.42	0.1	0.1	8.52	8.32		8.469	8.472	8.436		8.459	OK	0.016		
16		CMM		8.42	0.1	0.1	8.52	8.32		8.434	8.426	8.437		8.4323333	OK	0.005		
17		CMM		8.42	0.1	0.1	8.52	8.32		8.369	8.396	8.365		8.3766667	OK	0.014		
18		CMM		8.42	0.1	0.1	8.52	8.32		8.476	8.462	8.474		8.4706667	OK	0.006		
19		CMM		8.42	0.1	0.1	8.52	8.32		8.341	8.356	8.367		8.3546667	OK	0.011		
20		CMM		8.42	0.1	0.1	8.52	8.32		8.464	8.435	8.476		8.4583333	OK	0.017		
21		CMM		8.42	0.1	0.1	8.52	8.32		8.520	8.490	8.478		8.496	OK	0.018		
22		CMM		8.42	0.1	0.1	8.52	8.32		8.427	8.460	8.434		8.4403333	OK	0.014		
23		CMM		8.42	0.1	0.1	8.52	8.32		8.449	8.472	8.462		8.461	OK	0.009		
24		CMM		8.42	0.1	0.1	8.52	8.32		8.361	8.365	8.382		8.3693333	OK	0.009		
25		CMM		8.42	0.1	0.1	8.52	8.32		8.359	8.426	8.435		8.4066667	OK	0.034		
26		CMM		8.42	0.1	0.1	8.52	8.32		8.422	8.423	8.345		8.3966667	OK	0.037		
27		CMM		8.42	0.1	0.1	8.52	8.32		8.389	8.391	8.436		8.4053333	OK	0.022		
28		CMM		8.42	0.1	0.1	8.52	8.32		8.426	8.438	8.361		8.4084667	OK	0.034		
29		CMM		8.42	0.1	0.1	8.52	8.32		8.448	8.436	8.420		8.4346667	OK	0.011		
30		CMM		8.42	0.1	0.1	8.52	8.32		8.410	8.431	8.324		8.3883333	OK	0.046		
31		CMM		8.42	0.1	0.1	8.52	8.32		8.449	8.450	8.460		8.453	OK	0.005		
32		CMM		8.42	0.1	0.1	8.52	8.32		8.333	8.420	8.410		8.3876667	OK	0.039		
33		CMM		8.42	0.1	0.1	8.52	8.32		8.444	8.460	8.450		8.4513333	OK	0.007		
34		CMM		1.07	0.05	0.05	1.12	1.02		1.040	1.066	1.070		1.0586667	OK	0.013		
35		CMM		1.07	0.05	0.05	1.12	1.02		1.050	1.056	1.050		1.052	OK	0.003		
36		CMM		1.07	0.05	0.05	1.12	1.02		1.060	1.042	1.050		1.0506667	OK	0.007		
37		CMM		1.07	0.05	0.05	1.12	1.02		1.036	1.040	1.040		1.0386667	OK	0.002		
38		CMM		1.07	0.05	0.05	1.12	1.02		1.043	1.045	1.045		1.0443333	OK	0.001		
39		CMM		1.07	0.05	0.05	1.12	1.02		1.035	1.054	1.042		1.0436667	OK	0.008		
40		CMM		1.07	0.05	0.05	1.12	1.02		1.043	1.045	1.032		1.04	OK	0.006		
41		CMM		1.07	0.05	0.05	1.12	1.02		1.026	1.034	1.050		1.0366667	OK	0.010		
42		CMM		1.07	0.05	0.05	1.12	1.02		1.045	1.036	1.050		1.0436667	OK	0.006		
43		CMM		1.07	0.05	0.05	1.12	1.02		1.035	1.028	1.042		1.035	OK	0.006		
44		CMM		1.07	0.05	0.05	1.12	1.02		1.036	1.048	1.049		1.0443333	OK	0.006		
45		CMM		1.07	0.05	0.05	1.12	1.02		1.072	1.073	1.073		1.0726667	OK	0.000		
46		CMM		1.07	0.05	0.05	1.12	1.02		1.078	1.072	1.056		1.0686667	OK	0.009		
47		CMM		1.07	0.05	0.05	1.12	1.02		1.075	1.076	1.068		1.073	OK	0.004		
48		CMM		1.07	0.05	0.05	1.12	1.02		1.058	1.059	1.065		1.0606667	OK	0.003		
49		CMM		1.07	0.05	0.05	1.12	1.02		1.067	1.061	1.064		1.064	OK	0.002		
50		CMM		1.07	0.05	0.05	1.12	1.02		1.054	1.062	1.067		1.061	OK	0.005		
51		CMM		1.07	0.05	0.05	1.12	1.02		1.058	1.046	1.052		1.052	OK	0.005		
52		CMM		1.07	0.05	0.05	1.12	1.02		1.035	1.049	1.075		1.053	OK	0.017		
53		CMM		1.07	0.05	0.05	1.12	1.02		1.072	1.085	1.076		1.0776667	OK	0.005		
54		CMM		1.07	0.05	0.05	1.12	1.02		1.081	1.082	1.079		1.0806667	OK	0.001		
55		CMM		1.07	0.05	0.05	1.12	1.02		1.076	1.076	1.078		1.0766667	OK	0.001		

Qisda

Dimension Approval Sheet

Model Name:	QD2181AL-P	**Sample Approval Sheet NO.:**	
Part Name:	REAR COVER	**Material:**	PC+ABS Bayblend FR3010
Part Number:	3J.6G701.B11 **REV:** A0	**Color:**	BLACK
Vendor:	DQ9	**Date:**	2026/4/15

Inspection Gauge:

Coordinate Measuring Machine	(CMM)	Micro Scope	(M)	Radius Gauge	
Caliper	(C)	Height Gauge	(HG)	Block Gauge	
Micrometer	(M)	Projector	(P)	Visual	
Pin Gauge	(PG)	Thickness Gauge	(T)	Lever Type Dial Test	

Distribution

R&D	
QC	
Purchase	
Vendor	

Vendor Input | **Low** | **High**

If the Range is Greater Than 50% of the Total Tolerance the Cell will be RED

Item	Dim. Loc.	Gage Code	Cav. No	Spec.	Upper Tol	Lower Tol	Upper Limit	Lower Limit		Sample 1#	Sample 2#	Sample 3#	RD Check	Average	Status	Range	Disposition	Comments
56		CMM		1.07	0.05	0.05	1.12	1.02		1.076	1.074	1.071		1.0736667	OK	0.002		
57		CMM		11.5	0.1	0.1	11.6	11.4		11.560	11.520	11.520		11.533333	OK	0.019		
58		CMM		11.5	0.1	0.1	11.6	11.4		11.570	11.540	11.526		11.545333	OK	0.018		
59		CMM		11.5	0.1	0.1	11.6	11.4		11.486	11.492	11.472		11.483333	OK	0.008		
60		CMM		11.5	0.1	0.1	11.6	11.4		11.525	11.510	11.536		11.523667	OK	0.011		
61		CMM		11.5	0.1	0.1	11.6	11.4		11.476	11.558	11.586		11.54	OK	0.047		
62		CMM		11.5	0.1	0.1	11.6	11.4		11.530	11.543	11.526		11.533	OK	0.007		
63		CMM		11.5	0.1	0.1	11.6	11.4		11.481	11.482	11.492		11.485	OK	0.005		
64		CMM		11.5	0.1	0.1	11.6	11.4		11.530	11.524	11.524		11.526	OK	0.003		
65		CMM		11.5	0.1	0.1	11.6	11.4		11.552	11.524	11.534		11.536667	OK	0.012		
66		CMM		11.5	0.1	0.1	11.6	11.4		11.563	11.546	11.585		11.564667	OK	0.016		
67		CMM		11.5	0.1	0.1	11.6	11.4		11.536	11.524	11.536		11.532	OK	0.006		
68		CMM		11.5	0.1	0.1	11.6	11.4		11.492	11.483	11.468		11.481	OK	0.010		
69		CMM		11.5	0.1	0.1	11.6	11.4		11.485	11.524	11.537		11.515333	OK	0.022		
70		CMM		11.5	0.1	0.1	11.6	11.4		11.468	11.475	11.496		11.479667	OK	0.012		
71		CMM		11.5	0.1	0.1	11.6	11.4		11.523	11.524	11.549		11.532	OK	0.012		
72		CMM		11.5	0.1	0.1	11.6	11.4		11.495	11.486	11.520		11.500333	OK	0.014		
73		CMM		11.5	0.1	0.1	11.6	11.4		11.526	11.514	11.518		11.519333	OK	0.005		
74		CMM		11.5	0.1	0.1	11.6	11.4		11.536	11.524	11.514		11.524667	OK	0.009		
75		CMM		11.5	0.1	0.1	11.6	11.4		11.524	11.522	11.501		11.515667	OK	0.010		
76		CMM		11.5	0.1	0.1	11.6	11.4		11.560	11.552	11.542		11.551333	OK	0.007		
77		CMM		11.5	0.1	0.1	11.6	11.4		11.526	11.514	11.520		11.52	OK	0.005		
78		CMM		11.5	0.1	0.1	11.6	11.4		11.523	11.563	11.534		11.54	OK	0.017		
79		CMM		11.5	0.1	0.1	11.6	11.4		11.528	11.498	11.514		11.513333	OK	0.012		
80		CMM		11.5	0.1	0.1	11.6	11.4		11.536	11.546	11.528		11.536667	OK	0.007		
81		CMM		11.5	0.1	0.1	11.6	11.4		11.527	11.489	11.492		11.502667	OK	0.017		
82		CMM		11.5	0.1	0.1	11.6	11.4		11.536	11.549	11.528		11.537667	OK	0.009		
83		CMM		11.5	0.1	0.1	11.6	11.4		11.526	11.514	11.524		11.521333	OK	0.005		
84		CMM		1.93	0.05	0.05	1.98	1.88		1.951	1.925	1.946		1.9406667	OK	0.011		
85		CMM		1.93	0.05	0.05	1.98	1.88		1.946	1.925	1.936		1.9356667	OK	0.009		
86		CMM		1.93	0.05	0.05	1.98	1.88		1.928	1.926	1.945		1.933	OK	0.009		
87		CMM		1.93	0.05	0.05	1.98	1.88		1.936	1.945	1.948		1.943	OK	0.005		
88		CMM		1.93	0.05	0.05	1.98	1.88		1.926	1.948	1.935		1.9363333	OK	0.009		
89		CMM		1.93	0.05	0.05	1.98	1.88		1.935	1.927	1.924		1.9286667	OK	0.005		
90		CMM		1.93	0.05	0.05	1.98	1.88		1.946	1.925	1.927		1.9326667	OK	0.009		
91		CMM		1.93	0.05	0.05	1.98	1.88		1.927	1.936	1.934		1.9323333	OK	0.004		
92		CMM		1.93	0.05	0.05	1.98	1.88		1.908	1.924	1.926		1.9193333	OK	0.008		
93		CMM		1.93	0.05	0.05	1.98	1.88		1.932	1.915	1.928		1.925	OK	0.007		
94		CMM		1.93	0.05	0.05	1.98	1.88		1.926	1.927	1.924		1.9256667	OK	0.001		
95		CMM		1.93	0.05	0.05	1.98	1.88		1.927	1.964	1.924		1.9383333	OK	0.018		
96		CMM		1.93	0.05	0.05	1.98	1.88		1.941	1.933	1.954		1.9426667	OK	0.009		
97		CMM		1.93	0.05	0.05	1.98	1.88		1.936	1.924	1.928		1.9293333	OK	0.005		
98		CMM		1.93	0.05	0.05	1.98	1.88		1.924	1.928	1.934		1.9286667	OK	0.004		
99		CMM		1.93	0.05	0.05	1.98	1.88		1.926	1.931	1.911		1.9226667	OK	0.008		
100		CMM		1.93	0.05	0.05	1.98	1.88		1.935	1.946	1.925		1.9353333	OK	0.009		
101		CMM		1.93	0.05	0.05	1.98	1.88		1.925	1.924	1.955		1.9346667	OK	0.014		
102		CMM		1.93	0.05	0.05	1.98	1.88		1.927	1.964	1.944		1.945	OK	0.015		
103		CMM		1.93	0.05	0.05	1.98	1.88		1.931	1.928	1.927		1.9286667	OK	0.002		
104		CMM		1.93	0.05	0.05	1.98	1.88		1.933	1.944	1.942		1.9396667	OK	0.005		
105		CMM		1.93	0.05	0.05	1.98	1.88		1.924	1.954	1.945		1.941	OK	0.013		
106		CMM		2.06	0.05	0.05	2.11	2.01		2.046	2.043	2.041		2.0433333	OK	0.002		
107		CMM		2.06	0.05	0.05	2.11	2.01		2.032	2.048	2.048		2.0426667	OK	0.008		
108		CMM		2.06	0.05	0.05	2.11	2.01		2.035	2.056	2.045		2.0453333	OK	0.009		
109		CMM		2.06	0.05	0.05	2.11	2.01		2.041	2.046	2.047		2.0446667	OK	0.003		
110		CMM		2.06	0.05	0.05	2.11	2.01		2.048	2.056	2.057		2.0536667	OK	0.004		

Qisda

Dimension Approval Sheet

Model Name:	QD2181AL-P	**Sample Approval Sheet NO.:**	
Part Name:	REAR COVER	**Material:**	PC+ABS Bayblend FR3010
Part Number:	3J.6G701.B11 **REV:** A0	**Color:**	BLACK
Vendor:	DQ9	**Date:**	2026/4/15

Inspection Gauge:

Coordinate Measuring Machine	(CMM)	Micro Scope	(M)	Radius Gauge	
Caliper	(C)	Height Gauge	(HG)	Block Gauge	
Micrometer	(M)	Projector	(P)	Visual	
Pin Gauge	(PG)	Thickness Gauge	(T)	Lever Type Dial Test	

Distribution

R&D	
QC	
Purchase	
Vendor	

Vendor Input | **Low** | **High**

If the Range is Greater Than 50% of the Total Tolerance the Cell will be RED

Item	Dim. Loc.	Gage Code	Cav. No	Spec.	Upper Tol	Lower Tol	Upper Limit	Lower Limit		Sample 1#	Sample 2#	Sample 3#	RD Check	Average	Status	Range	Disposition	Comments
111		CMM		2.06	0.05	0.05	2.11	2.01		2.067	2.060	2.058		2.0616667	OK	0.004		
112		CMM		2.06	0.05	0.05	2.11	2.01		2.065	2.068	2.068		2.067	OK	0.001		
113		CMM		2.06	0.05	0.05	2.11	2.01		2.051	2.057	2.046		2.0513333	OK	0.004		
114		CMM		2.06	0.05	0.05	2.11	2.01		2.046	2.042	2.047		2.045	OK	0.002		
115		CMM		2.06	0.05	0.05	2.11	2.01		2.048	2.070	2.038		2.052	OK	0.013		
116		CMM		2.06	0.05	0.05	2.11	2.01		2.035	2.047	2.042		2.0413333	OK	0.005		
117		CMM		2.06	0.05	0.05	2.11	2.01		2.063	2.065	2.046		2.058	OK	0.009		
118		CMM		2.06	0.05	0.05	2.11	2.01		2.064	2.046	2.068		2.0593333	OK	0.010		
119		CMM		2.06	0.05	0.05	2.11	2.01		2.062	2.058	2.041		2.0536667	OK	0.009		
120		CMM		2.06	0.05	0.05	2.11	2.01		2.066	2.051	2.048		2.055	OK	0.008		
121		CMM		2.06	0.05	0.05	2.11	2.01		2.068	2.064	2.038		2.0566667	OK	0.013		
122		CMM		11.5	0.1	0.1	11.6	11.4		11.521	11.526	11.542		11.529667	OK	0.009		
123		CMM		11.5	0.1	0.1	11.6	11.4		11.526	11.524	11.547		11.532333	OK	0.010		
124		CMM		11.5	0.1	0.1	11.6	11.4		11.524	11.534	11.522		11.526667	OK	0.005		
125		CMM		11.5	0.1	0.1	11.6	11.4		11.574	11.522	11.534		11.543333	OK	0.022		
126		CMM		11.5	0.1	0.1	11.6	11.4		11.534	11.544	11.547		11.541667	OK	0.006		
127		CMM		11.5	0.1	0.1	11.6	11.4		11.562	11.561	11.526		11.549667	OK	0.017		
128		CMM		11.5	0.1	0.1	11.6	11.4		11.533	11.510	11.534		11.525667	OK	0.011		
129		CMM		11.5	0.1	0.1	11.6	11.4		11.543	11.536	11.542		11.540333	OK	0.003		
130		CMM		11.5	0.1	0.1	11.6	11.4		11.535	11.526	11.547		11.536	OK	0.009		
131		CMM		11.5	0.1	0.1	11.6	11.4		11.527	11.558	11.536		11.540333	OK	0.013		
132		CMM		11.5	0.1	0.1	11.6	11.4		11.534	11.546	11.524		11.534667	OK	0.009		
133		CMM		11.5	0.1	0.1	11.6	11.4		11.536	11.575	11.542		11.551	OK	0.017		
134		CMM		11.5	0.1	0.1	11.6	11.4		11.563	11.586	11.574		11.574333	OK	0.009		
135		CMM		11.5	0.1	0.1	11.6	11.4		11.546	11.554	11.553		11.551	OK	0.004		
136		CMM		11.5	0.1	0.1	11.6	11.4		11.558	11.596	11.574		11.576	OK	0.016		
137		CMM		11.5	0.1	0.1	11.6	11.4		11.530	11.580	11.570		11.56	OK	0.022		
138		CMM		3.5	0.05	0.05	3.55	3.45		3.520	3.510	3.530		3.52	OK	0.008		
139		CMM		1.09	0.05	0.05	1.14	1.04		1.080	1.120	1.140		1.1133333	OK	0.025		

Initiator:Guofeng Zhang Reviewed by :Carlos Q Chen Approve by: Owen_Chiang

AP_GP BOM Report

Qisda P/N	3J.6G701.B11
Qisda Item description	RC BLACK QD2181AI-P
Maker	Qisda Molding Factory
Maker P/N	3J.6G701.B11
Create date	2025/09/23

Component type	Description	Supplier	Subpart type	Subpart Description	Subpart Supplier	Sample Description	Remark	Report No.	Test Date	Cd	Pb	Hg	Cr6+	PBBs/PBDEs	Br	Cl	Br+Cl	DIBP	DEHP	BBP	DBP	F	I	Exemptions
Plastic Housing	FR3010HF 901510	航耀	Plastic Resin of Housing	FR3010HF 901510	航耀	黑色塑胶颗粒	航耀是Covestro(科思创)代理商	QHJ24030388802/CH;QHJ24030388 01/CH	2024/04/10;2024/04/03	N.D	N.D	N.D	N.D	N.D	N.D	N.D	N.D	N.D	N.D	N.D	N.D	1570	N.D	
Summary data										N.D	N.D	N.D	N.D	N.D	N.D	N.D	N.D	N.D	N.D	N.D	N.D	1570	N.D	