SPECIFICATION FOR APPROVAL

Customer : DIVA

Customer P/N: 3ZAD12V50Q2 (Z0517)

Part No : _____ **Rev :** _____

Description : AC-DC Adapter

Delta Model No : MEA-065A12C 6KA

Document Rev : 00

Sample Issue Date : Sep.26, 2023

設計驗證
工程課
2023.11.15
發行
鈺緯科技開發股份有限公司

DELTA ELECTRONICS, INC.

16, Tung Yuan Road
Chungli Industrial Zone.
Taoyuan Hsien 320, Taiwan, R.O.C
Internet : http:/www.deltaww.com
TEL:886-3-4526107 FAX:886-3-4343617

TABLE OF CONTENTS

1. Revision History
2. Electrical Specification
3. Physical Dimension
4. Label Drawing
5. Packing
6. Safety License

Please send one copy of this specification back after you signed approval for production pre-arrangement.

Customer Sign : _____ **Date :** _____

Approved By : Jason.HH.Chang **Date :** 2023/9/26

Engineer By: Max.Luo **M.Engineer By:** Bryan.Huang **Approved By:** Jason.HH.Chang

1. Revision History

DELTA P/N	MEA-065A12C 6KA	SHEET 1 OF 1
CONTENT	Revision History	DATE Sep.26, 2023

1.Revision History

REV.	DESCRIPTION	ENGINEER	DATE
00	ISSUE	Max.Luo	09/26/2023

2. Electrical Specification

REV.	Description	Date
S00	117-239041 SPEC ISSUE (MODIFY FROM MEA-065A12C A-A)	09/25’23

台達電子工業股份有限公司
DELTA ELECTRONICS, INC.

THESE DRAWINGS AND SPECIFICATIONS ARE THE PROPERTY OF DELTA ELECTRONICS, INC. AND SHALL NOT BE REPRODUCED OR USED AS THE BASIS FOR THE MANUFACTURE OR SELL OF APPARATUSES OR DEVICES WITHOUT PERMISSION.

DESCRIPTION :
電氣規格(Electrical Specification)

MODEL NO. :
MEA-065A12C 6KA

Date	Drawn	Design (EE)	Design (ME)	DOCUMENT NAME:	REV.
09/25’23	陳麗琴	羅建樟	黃玟瑀	**ES-065A12C 6KA**	**S00**

1. INTRODUCTIONS

This is a switching mode adaptor.

2. INPUT SPECIFICATIONS

2.1 Input Voltage

The Adaptor shall operate from 90Vac to 264Vac.

It is normal for 100Vac to 240Vac.

2.2 Input frequency

The Adaptor shall operate with an input frequency from 47Hz to 63Hz.

It is normal from 50Hz to 60Hz.

2.3 Input current

Maximum steady state input current is less than 1.5A rms. @ 115Vac input and 0.75A rms. @ 230Vac at maximum load.

2.4 Inrush current

The inrush current must less than 50A at 115Vac and 100A at 230Vac. Ambient at room temperature with cold start.

3. OUTPUT SPECIFICATIONS

The measured methods of output ripple and noise:

T1. Performed by 20MHz bandwidth in oscilloscope

Output Rated Power	Output Voltage	Output Rated Current	Output Peak Current	Total Regulation	Ripple &Noise
60W	12Vdc	5A	N/A	+0.6V/-0.6V	<120mVp-p

T2. Applied 0.1uF ceramic capacitor and 47uF electrolytic capacitor across output connector terminals

T3. Measured at the end of DC cable

T4. Measured at output 5A

T5. At room temperature.

4. GENERAL FEATURES

4.1 Power efficiency

> 88% at average efficiency @115Vac & 230Vac (Burn in 30 mins)

115Vac full load burn in 30 mins before test and measure at the end of DC cable.

4.2 Hold up time

This Adapter is capable to maintain output voltage within section 3.0 specified and more than 10 milliseconds at 115Vac input voltage and full load.

4.3 Protection

4.3.1 Over voltage protection

The Adapter will be protected while any single component failure and output voltage will be < 18V for internally generated OVP.

Protection mode：Latch off

4.3.2 Short circuit protection

The Adapter is protected at a short happened between the output terminals and shall not damage and shut down.

Protection mode：Auto recovery (Hiccup mode)

4.3.3 Over temperature protection

When the power supply operates over the temperature or over load limit, the power supply will be shut down automatically to protect itself.

Protection mode：Latch off

4.3.4 Over Current protection

The power supply is protected at an over load happened and shall not damage, and shut down. The acting point of OCP must be less than 9A .

Protection mode：Auto recovery (Hiccup mode)

4.4 Leakage current

The total combined leakage current shall not exceed 100 microamperes when test at 264VAC, 60Hz in a normal operating condition.

4.5 Fusing

Both lines (Line and Neutral) of the non-polarized, 2 wire (non-grounded) A.C. input are to be fused.

4.6 Hi-Pot test

AC input to output 4KVac, and limit current < 10mA. Test condition:60sec (Max: 10mA, Arc current 16mA).

AC input to PE 1.5KVac, and limit current < 10mA. Test condition:60sec (Max: 10mA, Arc current 10mA).

Output to PE 0.5KVac, and limit current < 10mA. Test condition:60sec (Max: 10mA, Arc current 10mA).

4.7 AC PLUG DISCHARGE

Both AC plug pin edges shall be measured by rated input current without output load condition at which DC withdraws after 1 second. After 1 second, input voltage shall be less than 60V.

5. ENVIRONMENT SPECIFICATIONS

5.1 Operating temperature

The Adapter is capable to operate from -10 to 60℃ (>40℃ de-rate power by 2.5%/℃).

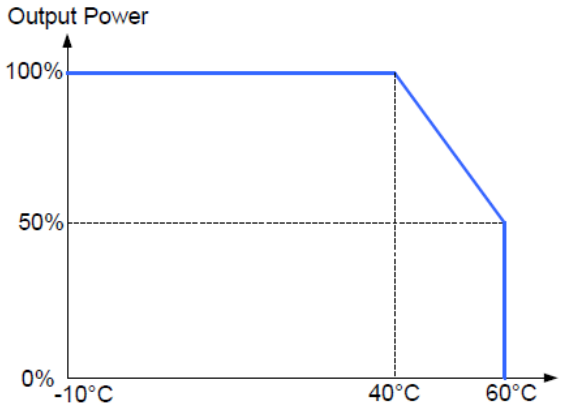

5.2 Storage temperature

The Adapter is capable to be stored from –40 to 85℃.

5.3 Relative humidity

5% to 95% non-condensing

5.4 Altitude

It will operate at any altitude between 0 to 5000m

5.5 MTBF

> 1000K hours (calculated, 115Vac and 25℃ at full load)

5.6 Burn in operating specification

Input voltage: 220Vac /50Hz

Output load: 95 +/- 5% of full load

Environment temperature: 40 deg C

Burn In test time 24 hours ~4hours B/I

6. INTERNATIONAL STANDARDS

6.1 Safety standards

IEC 60601-1 :2012 (Edition 3.1) / IEC 60950 / IEC 62368

UL 60601

EN 60601 / EN 60950 / EN 62368

6.2 EMC Requirements

	Test	Test Method	Additional Requirements/Information
Immunity	Electrostatic Discharge (ESD)	IEC 61000-4-2 Level 4 Criteria A Air Discharge: 15kV Contact Discharge: 8kV	
	Radiated RF	IEC 61000-4-3 2 Hz & 1kHz 80% AM Modulation 80-2700 MHz, 10V/m AM modulation: 385MHz-5785MHz, 28V/m Pulse mode and other modulation	In addition to table 9 below.
	Electrical Fast Transients (EFT) and Bursts	IEC 61000-4-4 Level 3 Criteria A: 2kV	
	Surge Withstand	IEC 61000-4-5 Level 3 Criteria A Common Mode: 2kV Differential Mode: 1kV	
	Conducted RF	IEC 61000-4-6 $3V_{rms}$; 0.15-80 MHz & $6V_{rms}$ at ISM and Amateur radio bands, 2 Hz & 1kHz, 80% AM Modulation	
	Magnetic Field	IEC 61000-4-8	50 and 60 Hz@ 30A/m; minimum dwell time 1 minute each axis

	AC Line Variations Sag, Surge, Dropouts	IEC 61000-4-11	Criteria A @Po=56W-0% UT, 0.5 cycle (10ms), 0°/45°/90°/135°/180°/225°/270°/315°/360 Criteria B 0% UT, 1 cycle (20ms), Criteria A 70% UT, 25 cycle (500ms), Criteria B 0% UT, 250 cycle (5000ms),
Emissions	Radiated RF	EN 55011 / EN 55032	6dB Margin Class B
	Conducted RF	EN 55011 / EN 55032	6dB Margin Class B
	Harmonic Current	IEC 61000-3-2	Class A
	Voltage Flicker	IEC 61000-3-3	

Table 9 – Test specifications for ENCLOSURE PORT IMMUNITY to RF wireless communications equipment

Test frequency (MHz)	Band [a] (MHz)	Service [a]	Modulation [b]	Maximum power (W)	Distance (m)	IMMUNITY TEST LEVEL (V/m)
385	380 –390	TETRA 400	Pulse modulation [b] 18 Hz	1,8	0,3	27
450	430 – 470	GMRS 460, FRS 460	FM [c] ± 5 kHz deviation 1 kHz sine	2	0,3	28
710	704 – 787	LTE Band 13, 17	Pulse modulation [b] 217 Hz	0,2	0,3	9
745						
780						
810	800 – 960	GSM 800/900, TETRA 800, iDEN 820, CDMA 850, LTE Band 5	Pulse modulation [b] 18 Hz	2	0,3	28
870						
930						
1 720	1 700 – 1 990	GSM 1800; CDMA 1900; GSM 1900; DECT; LTE Band 1, 3, 4, 25; UMTS	Pulse modulation [b] 217 Hz	2	0,3	28
1 845						
1 970						
2 450	2 400 – 2 570	Bluetooth, WLAN, 802.11 b/g/n, RFID 2450, LTE Band 7	Pulse modulation [b] 217 Hz	2	0,3	28
5 240	5 100 – 5 800	WLAN 802.11 a/n	Pulse modulation [b] 217 Hz	0,2	0,3	9
5 500						
5 785						

NOTE If necessary to achieve the IMMUNITY TEST LEVEL, the distance between the transmitting antenna and the ME EQUIPMENT or ME SYSTEM may be reduced to 1 m. The 1 m test distance is permitted by IEC 61000-4-3.

[a] For some services, only the uplink frequencies are included.

[b] The carrier shall be modulated using a 50 % duty cycle square wave signal.

[c] As an alternative to FM modulation, 50 % pulse modulation at 18 Hz may be used because while it does not represent actual modulation, it would be worst case.

7. MECHANICAL SPECIFICATION

7.1 Case material and color

Material: PC

Color: Black

7.2 Outline dimension

L x W x H = 115.0 x 50.0 x 29.0 mm (4.53 x 1.97 x 1.14 inch)

7.3 AC inlet

IEC320, C14 Standard

7.4 DC output cable and pin assignment

Model name	Description		
	Length	Cable type	Connector
MEA-065A12C A-A	1200 mm	UL1571, #16AWG*(1C+1S)	Huang Ji PN : 5525TVM250-1T00-02 or equivalent Mating with : CUI Inc., P/N : PJ-006B-SMT
MEA-065A12C 6-A MEA-065A12C 6KA MEA-065A12C 6GA	1200 mm	UL1571, #16AWG*(2C+1S)	HUAN HU PN: HYDP0400010-XX

7.5 Shock and vibration test requirement

7.5.1 Shock Test (Non-operation) IEC 6068-2-27 Basic Environment –Shock 1987;

-Peak Acceleration: 50G

-Duration: 11 ms

-Pulse Shape: half-sine

-Number of shocks: 3 shocks per directions.

7.5.2 Vibration test (Non-operation) IEC 6068-2-64 Basic Environment –Random Vibration 1993;

-Pulse Shape: Random

5~100Hz 0.015 G2/HZ

100~137Hz 6 dB/Oct

137~350Hz 0.008 G2/HZ

350~500Hz -6 dB/Oct

-Acceleration: 2.09 Grms

-Duration: 20 min per perpendicular axis

8. Mechanical Test Process

Item	Reference	Test Condition	Criteria
Ball Impact	IEC 60601-1 (15.3.3)	1. Test height：130cm 2. Test place：1 sample 1 time 3. Steel ball, weight 0.5kg 4. Concrete floor.	1. If case has any crack. The golden finger can't touch inside components 2. Hi- Pot must meet specification.
Drop Test	10000-0258	TEST 1(Non-operating) 1. Drop height: H= 76 cm. 2. Drop test place：once /surface 3. Drop surface: concrete	1. ATS function Pass. 2. No PWB copper pad peeling and broken. 3. No soldering crack. 4. No component broken.
		TEST2(Non-operating) 1. Drop height: H= 10cm 2. Numbers of drop: 10 times /surface. 3. Drop surface: concrete	
	IEC 60601-1 (15.3.4.1)	(Non-operating) 1. Drop height：110cm 2. Drop test place：once /surface 3. Drop surface: concrete	1. If case has any crack. The golden finger can't touch inside components. 2. Hi- Pot must meet specification.
Tumble Test	(10000-0258)	1. Drop height: 50cm 2. Tumble cycles: 50 cycles 3. Check function after 50 cycles	1. The function must be normal 2. Hi- Pot must meet specification. 3. AC pin 微彎曲可接受, 但仍要能插入插座.
IPX2	IEC60601-1-11	1. Height:<20mm 2. Gradient:15 degree 3. Water equivalent: 3mm/min (±0.5mm/min) 4. 2.5 min for each face total 10 min (4 faces) 5. Total 2 PCS	1. Open case to check has water or not 2. Need no water in case
DC Power Cord Tensile Test		A static load shall be applied and sustained for a period. Excessive load shall not be applied in this test, unless special request. 1. Load (w): 10 kgf 2. Durance: 60 sec	1. Contact part and bushing shall not be detached.

DC Power cord Bending test		Hang the specified weight and swing it to one direction and return to the original position then swing to the opposite direction and return to the original position. This constitutes one cycle. The DC power supply shall be subjected to the specified cycles a specified speed. 1. Weight: 200g 2. Swing angle (θ): ±60° 3. Cycles: 3,000 cycles 4. Speed: 40 cycles/min. 5. Compliance : Plug-SR, Case-SR, Core-SR 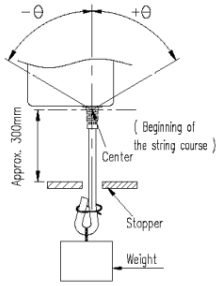	1. Disconnection rate of the wire shall be less than 30% 2. No damage to the insulations, etc.
Adhesion of specification labels		Firmly apply pressure sensitive adhesive tape on the middle of the specification label to the lengthwise direction. Pull the tape off quickly at a 90∘angle to the surface of the label once. 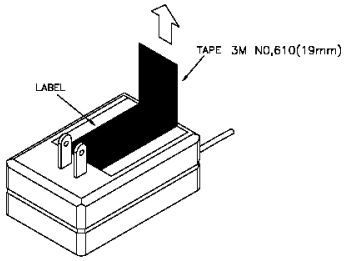	

Label Temperature test		1. The label is supposed to be pasted on PC, PC+ABS and ABS case evenly and properly for 24 hours. 2. The label will be burnt in 72 hours in oven which temperature is 85°C. 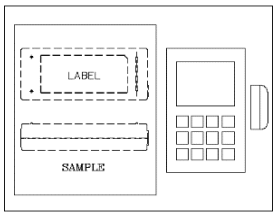	The label can't be any bulge and warp.
Wiggle test		AC cable inserted fully into AC inlet to wiggle 6000 times, 30 times per minute, then adjust the fixture to fit the wiggle angle in up and down each side 5 degree, ac cable up and down without current flow. (example: L=40 mm , amplitude = +- 3.5 mm , force = 10 kg) 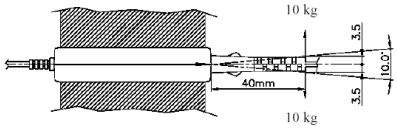	1. After this test, no found the AC inlet or pin damage. 2. Without distinct damage in appearance. 3. ATS function Pass.
AC plug in-out cycle test		AC plug in-out of AC inlet 6000 times, 30 times/min. without current flow. 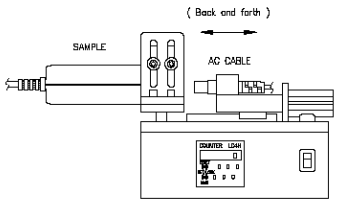	1. No found the AC inlet or pin damage. 2. ATS function Pass. Without distinct damage in appearance. 3. Refer to IEC 320 requirement.
Side Compression Test	(10000-0157-0008)	Apply a force of 100kgf over an 8 cm (Min) diameter plate at 500 mm/min with a Tensile/Compression machine.	Confirm that the power adapter is safe and functional.

Product Application: Medical Power

3. Physical Dimension

FIG. 2

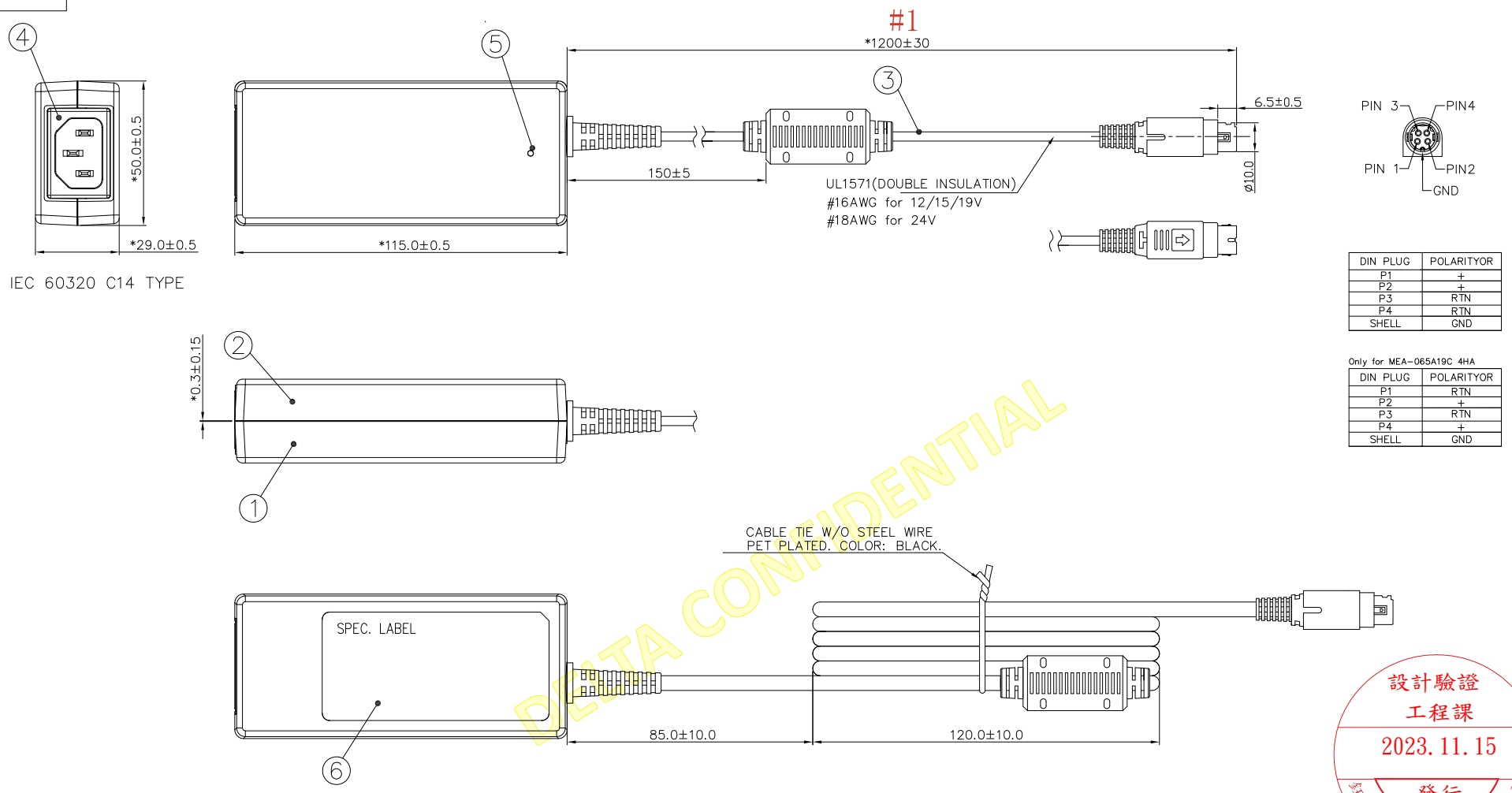

DIN PLUG	POLARITYOR
P1	+
P2	+
P3	RTN
P4	RTN
SHELL	GND

Only for MEA-065A19C 4HA

DIN PLUG	POLARITYOR
P1	RTN
P2	+
P3	RTN
P4	+
SHELL	GND

DELTA CONFIDENTIAL

設計驗證
工程課
2023.11.15
發行
鈺鑽科技開發股份有限公司

ITEM	PART NAME	COLOR
1	COVER	BLACK
2	CHASSIS	BLACK
3	POWER CORD	BLACK
4	SOCKET	BLACK
5	LED	GREEN
6	LABEL	BLACK

NOTES:
1. PLUG'S SHAPE: 4 PIN DIN (LOCK TYPE) .
2. PLUG'S POLARITY: PLEASE SEE TBALE
3. MARKED * MARK MUST BE INSPECTED AND CONTROLLED STRICTLY BY QA.

3ZAD12V50Q2(Z0517)

台達電子工業股份有限公司
DELTA ELECTRONICS, INC.

Drawn: BRYAN.HUANG
Design: BRYAN.HUANG

THESE DRAWINGS AND SPECIFICATIONS ARE THE PROPERTY OF DELTA ELECTRONICS, INC. AND SHALL NOT BE REPRODUCED OR USED AS THE BASIS FOR THE MANUFACTURE OR SELL OF APPARATUSES OR DEVICES WITHOUT PERMISSION.

THIRD ANGLE PROJECTION

Description: PHYSICAL DIMENSION

DIMENSIONAL TOLERANCES
HOLES : ±0.05 ANGLES : ±0.5°

( )		(V.)	( )	( )
<30	: ±0.25	DECIMALS	UP~100 : ±0.2	250~300 : ±0.4	UP~600 : ±1.5
>30~100	: ±0.35	X : ±0.3	100~150 : ±0.25	300~350 : ±0.45	600~900 : ±2.4
>100~300	: ±0.5	X.X : ±0.2	150~200 : ±0.3	350~400 : ±0.5	900~OVER : ±3.1
ABOVE 300	: ±0.8	X.XX : ±0.1	200~250 : ±0.35		

A2 SIZE

Part No. MEA-065AXXC SERIES

REV. 07

SCALE – | UNIT MM | USED ON MEA-065AXXC SERIES

SHEET 4 OF 6

ISSUE DATE: 09/15'23

FRAME NAME: DF-MEA2H-1R01.DWG

4. Label Drawing

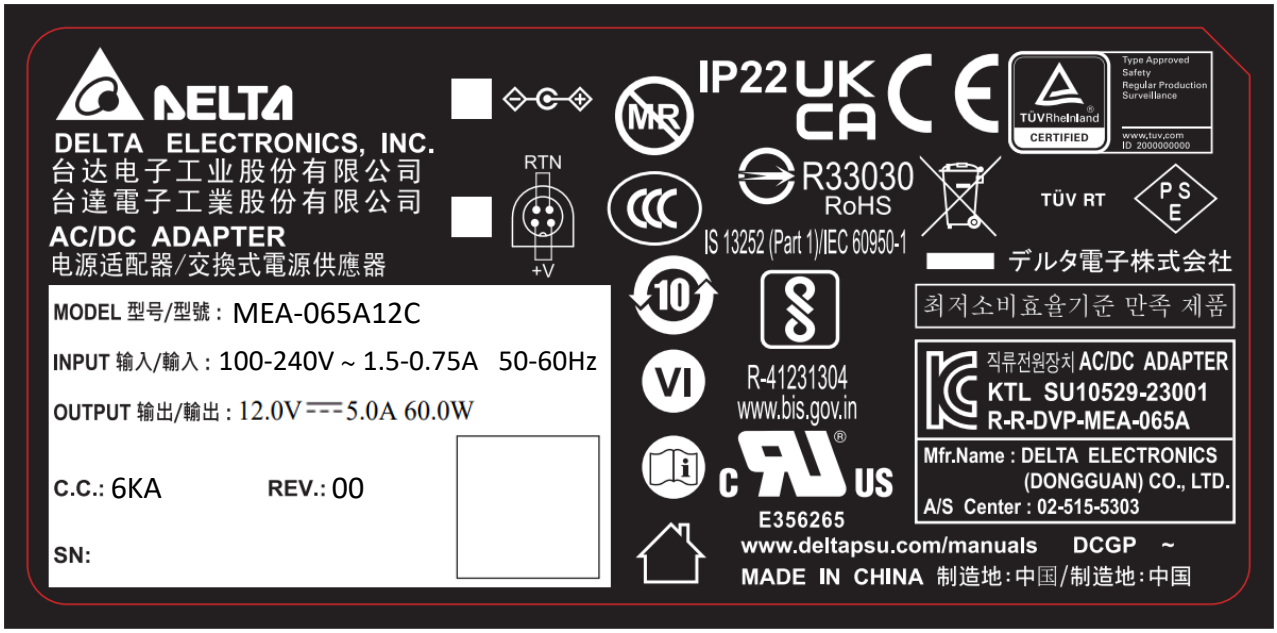

Part No.	REV:	USE ON :	DATE	Label
3265769371	01	MEA-065A12C 6KA	09/21'23	

5. Packing

NOTES:
1. 40PCS/CARTON*2*3CARTONS/LAYER*4LAYERS=960PCS/PALLET
2. ALL THE PACKING MATERIAL SHOULD MEET DELTA GENERAL SPEC:10000-0162.

ITEM	PART NO.	NAME	OUTSIDE DIM.(mm)	Q'TY	REMARK	
01	35138362XX	CARTON	506X406X215	1/40	25.000	TP
02	35143258XX	PARTITION	488X388X182	1/40	25.000	TP
⚠ 03	35022486XX	PE BAG	430X100X0.05	1/1	1.000	PCE
04	35108969XX	PAD PAPER	480X380X3	2/40	50.000	TP
05	3524029200	PALLET	1220X1016X120	1/960	1.042	TP
06	35101844XX	ANGLE PAPER	900X55X55	8/960	8.334	TP
07	35201427XX	PLASTIC STRIP	W=12 t=0.5	27/960	28.125	MMT
08	35200824XX	PE FILM	T=0.02mm	150g/960	0.157	GRM
09	35200899XX	PE SHEET	1500X1300	1/960	1.042	TP

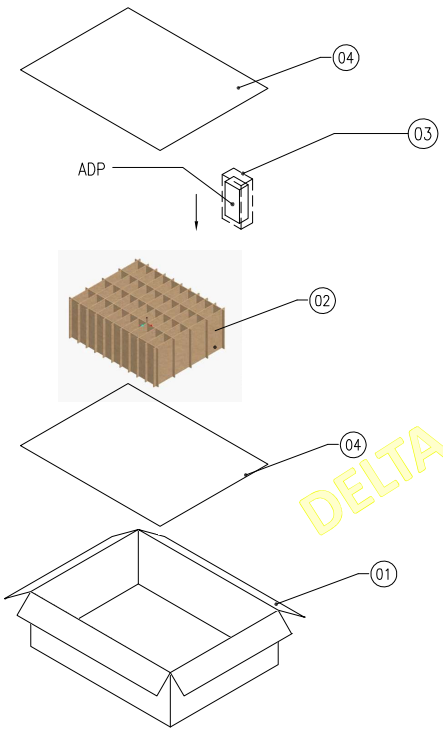

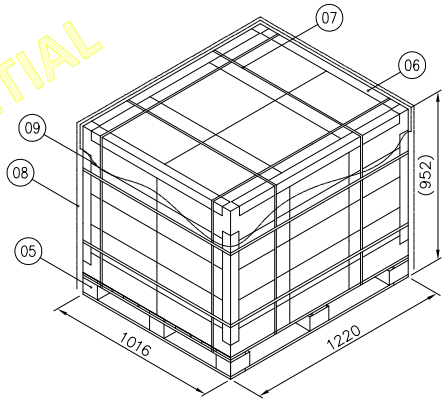

DELTA CONFIDENTIAL

台達電子工業股份有限公司
DELTA ELECTRONICS, INC.

Drawn: Rock.wen 03/07'22
Design: Rock.wen 03/07'22

THESE DRAWINGS AND SPECIFICATIONS ARE THE PROPERTY OF DELTA ELECTRONICS, INC. AND SHALL NOT BE REPRODUCED OR USED AS THE BASIS FOR THE MANUFACTURE OR SELL OF APPARATUSES OR DEVICES WITHOUT PERMISSION.

THIRD ANGLE PROJECTION

Description: PML

DIMENSIONAL TOLERANCES HOLES : ±0.05 ANGLES : ±0.5°

( )		(V)		( )		( )	
<30	: ±0.25	DECIMALS		UP~100	: ±0.2	250~300	: ±0.4	UP~600	: ±1.5
>30~100	: ±0.35	X	: ±0.3	100~150	: ±0.25	300~350	: ±0.45	600~900	: ±2.4
>100~300	: ±0.5	X.X	: ±0.2	150~200	: ±0.3	350~400	: ±0.5	900~OVER	: ±3.1
ABOVE 300	: ±0.6	X.XX	: ±0.1	200~250	: ±0.35				

A3 SIZE

Part No. 3526657801

REV. 01

SCALE -- UNIT mm USED ON MEA-065A12C A-A

SHEET 2 OF 2 ISSUE DATE: 03/07'22

FRAME NAME: DF-MEA3H-1R01.DWG

6. Safety License

Ref. Certif. No.

DK-137070-UL

IEC SYSTEM FOR MUTUAL RECOGNITION OF TEST CERTIFICATES FOR ELECTRICAL EQUIPMENT (IECEE) CB SCHEME

CB TEST CERTIFICATE

Product	AC/DC Medical Adapter
Name and address of the applicant	DELTA ELECTRONICS INC 3 Tungyuan Road Chungli Industrial Zone Taoyuan City 32063 Taiwan
Name and address of the manufacturer	DELTA ELECTRONICS INC 3 Tungyuan Road Chungli Industrial Zone Taoyuan City 32063 Taiwan
Name and address of the factory Note: *When more than one factory, please report on page 2*	DELTA ELECTRONICS (JIANGSU) LTD. No 1688 Jiangxing East Road Wujiang Economic and Technological Development Zone Suzhou City, Jiangsu Province, 215200 China ☒ Additional Information on page 2
Ratings and principal characteristics	Input rating: 100 - 240 Vac, 1.5-0.75 A, 50-60 Hz ☒ Additional Information on page 2
Trademark / Brand (if any)	DELTA
Customer's Testing Facility (CTF) Stage used	
Model / Type Ref.	MEA-065A19C, MEA-065A15C, MEA-065A24C, MEA-065A12C
Additional information (if necessary may also be reported on page 2)	National Difference specified in the CB Test Report The risk management requirements of the standard were not addressed ☐ Additional Information on page 2
A sample of the product was tested and found to be in conformity with	IEC 60601-1:2005, IEC 60601-1:2005/AMD1:2012, IEC 60601-1:2005/AMD2:2020
As shown in the Test Report Ref. No. which forms part of this Certificate	E356265-D1116-1/A0/C0-CB issued on 2023-01-16

This CB Test Certificate is issued by the National Certification Body

UL Solutions

☐ UL Solutions (US), 333 Pfingsten Rd IL 60062, Northbrook, USA
☒ UL Solutions (Demko), Borupvang 5A DK-2750 Ballerup, DENMARK
☐ UL Solutions (JP), Marunouchi Trust Tower Main Building 6F, 1-8-3 Marunouchi, Chiyoda-ku, Tokyo 100-0005, JAPAN
☐ UL Solutions (CA), 7 Underwriters Road, Toronto, M1R 3B4 Ontario, CANADA

For full legal entity names see www.ul.com/ncbnames

Date: 2023-01-30

Signature:
Jan-Erik Storgaard

Ref. Certif. No.

DK-137070-UL

Factory(ies):

DELTA ELECTRONICS (THAILAND) PUBLIC CO LTD
909 Soi 9 Moo 4
Bangpoo Industrial Estate (E.P.Z.)
Pattana 1 Road
Tambol Phraksa Amphur Muang Samutprakarn 10280
Thailand

Delta Electronics (Dongguan) Co Ltd
No 33 Pantao Road
Shijie Town Dongguan, Guangdong, 523308
China

Delta Electronics (Thailand) Public Company Limited
111/6 Moo 9, Wellgrow Industrial Estate, Bangna-Trad Road, Tambol Bangwua, Amphur Bangpakong Chachoengsao 24180
Thailand

Delta Electronics (Dongguan) Co., Ltd Southwest Branch
No 33 Pantao Road, Shijie Town Dongguan, Guangdong, 523308
China

Delta Electronics India Private Limited-SEZ Unit
Delta SEZ Notified at SY No 16/1B2B
Part & 16/1B2A Part Plot No1
Industrial Park Kurubarapalli Village Krishnagiri Dist, Tamil Nadu 635115
India

Additional Ratings:

Output rating (Full load):
MEA-065A12C: 12 Vdc, 5 A
MEA-065A15C: 15 Vdc, 4.33 A
MEA-065A19C: 19 Vdc, 3.42 A
MEA-065A24C: 24 Vdc, 2.71 A

When ambient 40 degree C - output full load, ambient 60 degree C - output half load

Additional information (if necessary)

☐ UL Solutions (US), 333 Pfingsten Rd IL 60062, Northbrook, USA
☒ UL Solutions (Demko), Borupvang 5A DK-2750 Ballerup, DENMARK
☐ UL Solutions (JP), Marunouchi Trust Tower Main Building 6F, 1-8-3 Marunouchi, Chiyoda-ku, Tokyo 100-0005, JAPAN
☐ UL Solutions (CA), 7 Underwriters Road, Toronto, M1R 3B4 Ontario, CANADA

For full legal entity names see www.ul.com/ncbnames

Date: 2023-01-30

Signature:

Jan-Erik Storgaard

Ref. Certif. No.

DK-91760-M1-UL

IEC SYSTEM FOR MUTUAL RECOGNITION OF TEST CERTIFICATES FOR ELECTRICAL EQUIPMENT (IECEE) CB SCHEME

CB TEST CERTIFICATE

Product	AC/DC MEDICAL ADAPTER
Name and address of the applicant	DELTA ELECTRONICS INC 3 TUNGYUAN ROAD CHUNGLI INDUSTRIAL ZONE TAOYUAN CITY 32063 TAIWAN
Name and address of the manufacturer	DELTA ELECTRONICS INC 3 TUNGYUAN ROAD CHUNGLI INDUSTRIAL ZONE TAOYUAN CITY 32063 TAIWAN
Name and address of the factory Note: *When more than one factory, please report on page 2*	Delta Electronics (Thailand) Public Co., Ltd. 909 Soi 9 Moo 4, Bangpoo Industrial Estate (E.P.Z.), Pattana 1 Road, Tambol Phraksa, Amphur Muang, Samutprakarn 10280, Thailand ☒ Additional Information on page 2
Ratings and principal characteristics	Input: 100-240V~, 1.5-0.75A, 50-60Hz; OUTPUT: 1) 24 Vdc/ 2.71 A 2) 19 Vdc/ 3.42 A 3) 15 Vdc/ 4.33 A 4) 12 Vdc/ 5 A
Trademark (if any)	
Customer's Testing Facility (CTF) Stage used	
Model / Type Ref.	1) MEA-065A24C, 2) MEA-065A19C, 3) MEA-065A15C, 4) MEA-065A12C
Additional information (if necessary may also be reported on page 2)	The report was revised to include technical modifications. ☒ Additional Information on page 2
A sample of the product was tested and found to be in conformity with	IEC 60950-1:2005/AMD1:2009, IEC 60950-1:2005, IEC 60950-1:2005/AMD2:2013
As shown in the Test Report Ref. No. which forms part of this Certificate	E131881-A6046-CB-1 issued on 2021-12-19

This CB Test Certificate is issued by the National Certification Body

☐ UL (US), 333 Pfingsten Rd IL 60062, Northbrook, USA
☒ UL (Demko), Borupvang 5A DK-2750 Ballerup, DENMARK
☐ UL (JP), Marunouchi Trust Tower Main Building 6F, 1-8-3 Marunouchi, Chiyoda-ku, Tokyo 100-0005, JAPAN
☐ UL (CA), 7 Underwriters Road, Toronto, M1R 3B4 Ontario, CANADA

For full legal entity names see www.ul.com/ncbnames

Date: 2021-12-20
Original Issue Date: 2020-01-06

Signature:
Jan-Erik Storgaard

Ref. Certif. No.

DK-91760-M1-UL

Factory(ies):
Delta Electronics (Dongguan) Co., Ltd.
No.33 Pantao Road Shijie Town Dongguan Guangdong 523308
China

Delta Electronics (Jiangsu) Ltd.
215200, No.1688, Jiangxing East Road, Wujiang Economic and Technological Development Zone, Suzhou City, Jiangsu Province, P. R. China

DELTA ELECTRONICS (WUHU) LTD.
No. 138, Jiuhua North Road, LongShan Street, Economic technical Development Area Wuhu City, Anhui Province, P. R. China

Delta Electronics (Thailand) Public Co., Ltd.
111/6 Moo 9, Wellgrow Industrial Estate, Bangna-Trad Road, Tambol Bangwua, Amphur Bangpakong, Chachoengsao 24180, Thailand

Delta Electronics (Dongguan) Co., Ltd Southwest Branch
No.33 Pantao Road Shijie Town Dongguan Guangdong 523308
China

Delta Electronics India Private Limited-SEZ Unit
Delta SEZ Notified at SY No. 16/1B2B Part & 16/1B2A Part Plot No.1, Industrial Park, Kurubarapalli Village Krishnagiri Dist, Tamil Nadu, 635115, INDIA

Additionally evaluated to: EN 60950-1:2006, EN 60950-1:2006/A11:2009, EN 60950-1:2006/A1:2010, EN 60950-1:2006/A12:2011, EN 60950-1:2006/A2:2013,
National Difference specified in the CB Test Report
Summary of Modifications:
(1) Add and update factory information;
(2) Update manufacturer name from LOTTE ADVANCED MATERIALS CO LTD to LOTTE CHEMICAL CORPORATION for Plastic Enclosure;
(3) Update manufacturer name from Europtronic (Taiwan) Ind. Corp. to Europtronic (SuZhou) Co. Ltd. for X-Capacitor (CX1);
(4) Update manufacturer name from EPCOS to TDK for X-Capacitor (CX1);
(5) Update the rating for most sources of X-Capacitor (CX1).

Additional information (if necessary)

☐ UL (US), 333 Pfingsten Rd IL 60062, Northbrook, USA
☒ UL (Demko), Borupvang 5A DK-2750 Ballerup, DENMARK
☐ UL (JP), Marunouchi Trust Tower Main Building 6F, 1-8-3 Marunouchi, Chiyoda-ku, Tokyo 100-0005, JAPAN
☐ UL (CA), 7 Underwriters Road, Toronto, M1R 3B4 Ontario, CANADA

For full legal entity names see www.ul.com/ncbnames

Date: 2021-12-20
Original Issue Date: 2020-01-06

Signature:
Jan-Erik Storgaard

Ref. Certif. No.

DK-133062-UL

IEC SYSTEM FOR MUTUAL RECOGNITION OF TEST CERTIFICATES FOR ELECTRICAL EQUIPMENT (IECEE) CB SCHEME

CB TEST CERTIFICATE

Product	AC/DC MEDICAL ADAPTER
Name and address of the applicant	DELTA ELECTRONICS INC 3 Tungyuan Road Chungli Industrial Zone Taoyuan City 32063 Taiwan
Name and address of the manufacturer	DELTA ELECTRONICS INC 3 Tungyuan Road Chungli Industrial Zone Taoyuan City 32063 Taiwan
Name and address of the factory Note: *When more than one factory, please report on page 2*	Delta Electronics (Dongguan) Co Ltd No 33 Pantao Road Shijie Town Dongguan, Guangdong, 523308 China ☒ Additional Information on page 2
Ratings and principal characteristics	Input: 100-240V~, 1.5-0.75A, 50-60Hz, OUTPUT: 1) 24 Vdc/ 2.71 A 2) 19 Vdc/ 3.42 A 3) 15 Vdc/ 4.33 A 4) 12 Vdc/ 5 A
Trademark / Brand (if any)	
Customer's Testing Facility (CTF) Stage used	
Model / Type Ref.	1) MEA-065A24C, 2) MEA-065A19C, 3) MEA-065A15C, 4) MEA-065A12C
Additional information (if necessary may also be reported on page 2)	**Additionally evaluated to:** EN IEC 62368-1:2020, EN IEC 62368-1:2020/A11:2020 National Differences specified in the CB Test Report. ☐ Additional Information on page 2
A sample of the product was tested and found to be in conformity with	IEC 62368-1:2018
As shown in the Test Report Ref. No. which forms part of this Certificate	E131881-A6838-CB-1 issued on 2022-10-02

This CB Test Certificate is issued by the National Certification Body

UL Solutions

☐ UL Solutions (US), 333 Pfingsten Rd IL 60062, Northbrook, USA
☒ UL Solutions (Demko), Borupvang 5A DK-2750 Ballerup, DENMARK
☐ UL Solutions (JP), Marunouchi Trust Tower Main Building 6F, 1-8-3 Marunouchi, Chiyoda-ku, Tokyo 100-0005, JAPAN
☐ UL Solutions (CA), 7 Underwriters Road, Toronto, M1R 3B4 Ontario, CANADA

For full legal entity names see www.ul.com/ncbnames

Date: 2022-10-03

Signature:
Jan-Erik Storgaard

Ref. Certif. No.

DK-133062-UL

Factory(ies):

Delta Electronics (Dongguan) Co., Ltd Southwest Branch
No 33 Pantao Road, Shijie Town Dongguan, Guangdong, 523308
China

DELTA ELECTRONICS (JIANGSU) LTD.
No 1688 Jiangxing East Road Wujiang Economic and Technological Development Zone Suzhou City, Jiangsu Province, 215200
China

DELTA ELECTRONICS (THAILAND) PUBLIC CO LTD
909 Soi 9 Moo 4 Bangpoo Industrial Estate (E.P.Z.) Pattana 1 Road Tambol Phraksa Amphur Muang Samutprakarn 10280
Thailand

Delta Electronics (Thailand) Public Company Limited
111/6 Moo 9, Wellgrow Industrial Estate, Bangna-Trad Road, Tambol Bangwua, Amphur Bangpakong Chachoengsao 24180
Thailand

Delta Electronics India Private Limited-SEZ Unit
Delta SEZ Notified at SY No 16/1B2B Part & 16/1B2A Part Plot No1
Industrial Park Kurubarapalli Village Krishnagiri Dist, Tamil Nadu 635115
India

Delta Electronics (Wuhu) Ltd
No. 138 Jiuhua North Road LongShan Street Economic-technical Development Area Wuhu City, Anhui Province, 241008
China

Additional information (if necessary)

UL Solutions

☐ UL Solutions (US), 333 Pfingsten Rd IL 60062, Northbrook, USA
☒ UL Solutions (Demko), Borupvang 5A DK-2750 Ballerup, DENMARK
☐ UL Solutions (JP), Marunouchi Trust Tower Main Building 6F, 1-8-3 Marunouchi, Chiyoda-ku, Tokyo 100-0005, JAPAN
☐ UL Solutions (CA), 7 Underwriters Road, Toronto, M1R 3B4 Ontario, CANADA

For full legal entity names see www.ul.com/ncbnames

Date: 2022-10-03

Signature:

Jan-Erik Storgaard

中国国家强制性产品认证证书

证书编号：2022010907468681

发证日期：2023 年 01 月 11 日

有效期至：2027 年 05 月 10 日

认证委托人名称及注册地址	台达电子工业股份有限公司 台湾桃园县龟山乡山顶村兴邦路 31 之 1 号
产品生产者名称及注册地址	台达电子工业股份有限公司 台湾桃园县龟山乡山顶村兴邦路 31 之 1 号
生产企业名称及生产地址	台达电子(东莞)有限公司西南分公司 中国广东省东莞市石碣镇蟠桃路 33 号
产品名称和系列、规格、型号	电源适配器 MEA-065A12C, MEA-065A15C, MEA-065A19C, MEA-065A24C; 输入: 100-240Vac, 1.5-0.75A, 50-60Hz; 输出：12Vdc/5A (适用于机种 MEA-065A12C); 15Vdc/4.33A (适用于机种 MEA-065A15C); 19Vdc/3.42A (适用于机种 MEA-065A19C); 24Vdc/2.71A (适用于机种 MEA-065A24C); 不带电线组件销售，仅适用于海 拔 5000 米及以下
产品标准和技术要求	GB 17625.1-2012;GB 4943.1-2022;GB/T 9254.1-2021

上述产品符合 CNCA-C09-01:2014 认证规则的要求，特发此证。

证书有效期内本证书的有效性依据发证机构的定期监督获得保持。

本证书为变更证书，证书首次颁发日期：2022 年 05 月 11 日

经中国合格评定国家认可委员会认可 CNAS C001-P

可通过扫描下方二维码或登录国家认监委网站（www.cnca.gov.cn）查验证书信息

签发：谢肇煦

中国质量认证中心

CERTIFICATE FOR CHINA COMPULSORY PRODUCT CERTIFICATION

CERTIFICATE NO.: 2022010907468681

Valid from: Jan.11,2023

Valid until: May.10,2027

NAME AND REGISTERED ADDRESS OF THE APPLICANT	Delta Electronics, Inc. 31-1, Shien Pan Road, Shanding Village, Guishanshan, Taoyuan County 33370, Taiwan
NAME AND REGISTERED ADDRESS OF THE MANUFACTURER	Delta Electronics, Inc. 31-1, Shien Pan Road, Shanding Village, Guishanshan, Taoyuan County 33370, Taiwan
NAME AND LOCATION OF THE FACTORY	Delta Electronics (Dongguan) Co., Ltd. Southwest Branch. No.33, Pantao Road, Shijie Town, Dongguan, Guangdong 523308, P. R. China
PRODUCT MODEL(S)	AC/DC ADAPTER MEA-065A12C, MEA-065A15C, MEA-065A19C, MEA-065A24C; Input: 100-240Vac, 1.5-0.75A, 50-60Hz; Output：12Vdc/5A (For MEA-065A12C); 15Vdc/4.33A (For MEA-065A15C); 19Vdc/3.42A (For MEA-065A19C); 24Vdc/2.71A (For MEA-065A24C); Sale without cord set. Altitude up to 5000m
STANDARDS AND TECHNICAL REQUIREMENTS	GB 17625.1-2012;GB 4943.1-2022;GB/T 9254.1-2021

This is to certify that the above mentioned product(s) complies with the requirements of implementation rules for compulsory certification(REFNO. CNCA-C09-01:2014)

The validity of the certificate is subject to positive result of the regular follow up inspection by issuing certification body until the expiry date.

Date of original issued: May.11,2022

Accredited by China National Accreditation Service for Conformity Assessment CNAS C001-P

The certificate information is available through the QR code below or CNCA's website: www.cnca.gov.cn

SIGNATURE: 谢肇煦

CHINA QUALITY CERTIFICATION CENTRE

Delta Electronics, Inc

Declaration of Conformity

Ref No: EISBG -102P-201910007-CE

Manufacturer name: Delta Electronics, Inc.

Add: 3, Tungyuan Road, Chungli Industrial Zone, Taoyuan City 32063, Taiwan

Tel: 886- 3- 4526107

Fax: 886 -3- 4527314

Is herewith confirmed the following equipment

Product: AC/DC MEDICAL ADAPTER

Brand name: DELTA

Type Designation: MEA-065A12C, MEA-065A15C, MEA-065A19C, MEA-065A24C

Input Rating: 100-240Vac, 1.5-0.75A, 50-60 Hz

Output rating: 12V/5A (for MEA-065A12C); 15V/4.33A (for MEA-065A15C); 19V/3.42A (for MEA-065A19C); 24V/2.71A (for MEA-065A24C)

Comply with the following directives and requirements set out in the Council Directive on the Approximation for the Laws of the Member States

- ☒ Low Voltage Directive 2014/35/EU
  - ☒ EN 62368-1:2014+A11:2017
- ☐ MDR Regulation 2017/745
  - ☒ EN 60601-1: 2006/A1 :2013/A12 :2014
  - ☒ EN 60601-1-2: 2015
  - ☒ CISPR 11:2009+A1:2010 (Group I, Class B)
  - ☒ IEC 61000-3-2: 2014
  - ☒ IEC 61000-3-3: 2013
- ☒ EMC Directive 2014/30/EU
  - ☐ EN 55032 : 2012+AC :2013 Class B
  - ☐ EN 55032 : 2015+AC :2016 Class B
  - ☒ EN 55032 : 2015+A11 :2020 Class B
  - ☐ EN 55035 : 2017
  - ☒ EN 55035 : 2017+A11 :2020
  - ☐ EN 55024 : 2010
  - ☒ EN 61000-3-2 : 2014
  - ☒ EN IEC 61000-3-2 : 2019
  - ☒ EN 61000-3-3 : 2013
  - ☒ EN 61000-3-3 : 2013+A1:2019
  - ☒ IEC 61000-4-2 : 2008: Edition 2.0
  - ☒ IEC 61000-4-3 : 2010: Edition 3.2

Delta Electronics, Inc

- ☒ IEC 61000-4-4 : 2012: Edition 3.0
- ☒ IEC 61000-4-5 : 2014 : Edition 3.1
- ☒ IEC 61000-4-6 : 2013: Edition 4.0
- ☒ IEC 61000-4-8 : 2009: Edition 2.0
- ☒ IEC 61000-4-11 : 2017: Edition 2.1

☒ RoHS Directive 2011/65/EU+ (EU) 2020/659

- ☒ EN IEC 63000:2018

☒ Commission Regulation (EU) 2019/1782, ErP Directive 2009/125/EC

- ☒ EN 50563: 2011+A1: 2013

This declaration of conformity is issued under the sole responsibility of the manufacturer.

Person responsible for making this declaration

Name, Surname: Sam Tien

Title: Principal Engineer

Place: Taiwan

Date: 2021-06-04

Signature: 

Delta Electronics, Inc

UKCA Declaration of Conformity

Ref No: EISBG -102P-201910007-UKCA

Manufacturer name: Delta Electronics, Inc.

Add: 3, Tungyuan Road, Chungli Industrial Zone, Taoyuan City 32063, Taiwan

Tel: 886- 3- 4526107

Fax: 886 -3- 4527314

Is herewith confirmed the following equipment

Product: AC/DC MEDICAL ADAPTER

Brand name: DELTA

Type Designation: MEA-065A12C, MEA-065A15C, MEA-065A19C, MEA-065A24C

Input Rating: 100-240Vac, 1.5-0.75A, 50-60 Hz

Output rating: 12V/5A (for MEA-065A12C); 15V/4.33A (for MEA-065A15C); 19V/3.42A (for MEA-065A19C); 24V/2.71A (for MEA-065A24C)

On 1 January 2021 the UK standards will be the same in substance and with the same reference as the standards used in the EU. However, they will use the prefix 'BS' to indicate that they are standards adopted by the British Standards Institution as the UK's national standards body.

The UK regulations that correspond to the EU directives are as linked.

- ☒ Electrical Equipment (Safety) Regulations 2016
  - ☒ BS EN 62368-1:2014+A11:2017
- ☒ Medical Devices Regulations 2002 (SI 2002 No 618, as amended) (UK MDR 2002)
  - ☒ BS EN 60601-1: 2006/A1 :2013/A12 :2014
  - ☒ BS EN 60601-1-2: 2015
  - ☒ CISPR 11:2009+A1:2010 (Group I, Class B)
  - ☒ IEC 61000-3-2: 2014
  - ☒ IEC 61000-3-3: 2013
- ☒ Electromagnetic Compatibility Regulations 2016
  - ☐ BS EN 55032 : 2012+AC :2013 Class B
  - ☐ BS EN 55032 : 2015+AC :2016 Class B
  - ☒ BS EN 55032 : 2015+A11 :2020 Class B
  - ☐ BS EN 55035 : 2017
  - ☒ BS EN 55035 : 2017+A11 :2020
  - ☐ BS EN 55024 : 2010
  - ☒ BS EN 61000-3-2 : 2014
  - ☒ BS EN IEC 61000-3-2 : 2019
  - ☒ BS EN 61000-3-3 : 2013

- ☒ BS EN 61000-3-3 : 2013+A1:2019
- ☒ IEC 61000-4-2 : 2008: Edition 2.0
- ☒ IEC 61000-4-3 : 2010: Edition 3.2
- ☒ IEC 61000-4-4 : 2012: Edition 3.0
- ☒ IEC 61000-4-5 : 2014 : Edition 3.1
- ☒ IEC 61000-4-6 : 2013: Edition 4.0
- ☒ IEC 61000-4-8 : 2009: Edition 2.0
- ☒ IEC 61000-4-11 : 2017: Edition 2.1

☒ The Restriction of the Use of Certain Hazardous Substances in Electrical and Electronic Equipment Regulations 2012 (as amended 2019,2020)

- ☒ BS EN IEC 63000 :2018

☒ The Ecodesign for Energy-Related Products and Energy Information (Amendment) (EU Exit) Regulations 2019

- ☒ BS EN 50563: 2011+A1: 2013

This declaration of conformity is issued under the sole responsibility of the manufacturer.

Person responsible for making this declaration

Name, Surname: Sam Tien

Title: Principal Engineer

Place: Taiwan

Date: 2021-06-04

Signature: 

DELTA ELECTRONICS, INC.

Statement of Compliance

****

Reference no: IPSBU-102P-202108002
Issued Date: 2021/09/17

This equipment has been evaluated in accordance with Japan Technical requirements Clause 2 and found to comply with the requirements. Detailed information is stated as the following.

	Model	Output	Certificate No.	Type Classification Control No.
1	MEA-065A12C (MEA-065A12C A-A)	12Vdc, 5A	JD 50518747	CL-01
2	MEA-065A15C (MEA-065A15C A-A)	15Vdc, 4.33A	JD 50518747	CL-01
3	MEA-065A19C (MEA-065A19C A-A)	19Vdc, 3.42A	JD 50518747	CL-02
4	MEA-065A24C (MEA-065A24C A-A)	24Vdc, 2.71A	JD 50518747	CL-02

Customer: DELTA ELECTRONICS (JAPAN), INC.

Importer Name: デルタ電子株式会社

Issued date of certificate: 2021/9/17

Validity of certificate: 2026/9/16

Factory: Delta Electronics (Jiangsu) Ltd

Prepared by:

Mila Huang
Senior Engineer
Regulatory & Reliability Engineering
Safety@deltaww.com
Ext.2572

Reviewed by:

Livia Hsueh
Principal Engineer
Regulatory & Reliability Engineering
Safety@deltaww.com
Ext.2059

☒ Provide the certificate via Delta sales

Signed by Delta Sales		Date	
Signed by Customer: Company name/ Contact Person		Date	

【写し Authorized Valid Copy】

適合同等証明書

Equivalent of the Certificate of Conformity

TÜVRheinland®

証明書番号 Certificate No.	ページ Page
JD 50518747	1

申請者照会番号 Applicant Reference	検査機関照会番号 Our Reference	発行年月日 Date of Issue
Laip-238519461	ZTW1-BCC-CN21ZO6A 001	2021 年 09 月 17 日

申請者 Applicant

Delta Electronics (Jiangsu) Ltd.

215200, No. 1688, Jiangxing East Road, Wujiang Economic and Technological Development Zone, Suzhou City, Jiangsu Province, P. R. China

製造工場 Manufacturing Plant

Delta Electronics (Jiangsu) Ltd.

215200, No. 1688, Jiangxing East Road, Wujiang Economic and Technological Development Zone, Suzhou City, Jiangsu Province, P. R. China

TÜV RT PSE

検査の方法 Inspection Method

- 技術上の基準を定める省令の解釈 別表第十二：J62368-1(2020), J55032(H29), J3000(H25)
  Interpretation on Ministerial Ordinance establishing Technical Requirements Appendix 12: J62368-1(2020), J55032(H29), J3000(H25)
- 施行規則別表第四（交流用電気機械器具）
  Appendix 4 of the Enforcement Regulations (AC Electric Appliances)

特定電気用品名
Name of Specified Electrical Appliance and Material
：直流電源装置
DC Power Supply Unit

型式の区分
Type Classification
：（「添付 1.0」参照）
(Refer to "Attachment 1.0")

証明書の有効期間
Validity of Certificate
：本証明書は、施行令で規定された期間である 2026 年 09 月 16 日まで有効です。
This certificate is effective until 16 September, 2026, being the period stipulated by the Enforcement Ordinance.

電気用品安全法第 8 条第 1 項に規定する技術基準及び同法第 9 条第 2 項の経済産業省令で定める基準（法第 9 条第 1 項第 2 号に係る検査に係るものに限る）に適合していることを証明します。
This is to certify that the above-mentioned Specified Electrical Appliances and Materials complies with the technical requirements stipulated in Paragraph 1 of Article 8 of Electrical Appliances and Materials Safety Act (here under referred to as the Act) and the requirements defined by the ordinance of the Ministry of Economy, Trade and Industry based on Paragraph 2 of Article 9 of the Act (limited to Item 2 of Paragraph 1 of Article 9 for Inspection of the Act).

注意事項 Notes

(1) この適合同等証明書は、提出された試験用の電気用品に関して評価を行った上で交付したものであり、同一の型式の区分にある電気用品について電気用品安全法第 8 条第 1 項に規定する技術基準適合確認の義務を履行したことを示すものではありません。
This Certificate of Conformity is issued only for those submitted test samples that are in conformity with Technical Requirements. It does not mean, for electrical products within the same classification, that the manufacturer has fulfilled the obligation to be in compliance with the technical standards specified based on Article 8, Item 1 of the Electrical Appliance and Material Safety Act.

(2) この適合同等証明書は、別紙に記載されている型式の区分の範囲内及び区分の組み合わせについてのみ有効です。
This Certificate of Conformity is valid only in conjunction with type classification sheet(s) specified as attached.

注記：本「写し」は、電気用品安全法施行規則第十三条第一号に基づき上記申請者の申請を受けて交付するものであり、本写しを申請者から受け取る輸入事業者は同法の要件を遵守しなければならない。NOTE: This Authorized Valid Copy is issued by receiving an application from the above applicant in accordance with Article 13, Item 1 of the Enforcement Regulations of Electrical Appliance and Material Safety Act. The Importer receiving this Authorized Valid Copy from the applicant shall comply with the requirements of the said Act.

テュフ ラインランド 台湾リミテッド
TÜV Rheinland Taiwan Ltd.

１１階、７５８、パートウロード、セクション４、ショウサン区、台北１０５、台湾
11F, No. 758, Bade Rd., Sec. 4, Songshan Dist., Taipei 105, Taiwan, R.O.C.

発行者 Issued by

氏名 Name Best Chen

ベスト チェン

TÜV Rheinland Taiwan Ltd. Certification Body

10/020 d 04.08 ® TÜV, TUEV and TUV are registered trademarks. Utilisation and application requires prior approval.

【写し Authorized Valid Copy】

TÜVRheinland®

添付 Attachment：1.0　　発行日 Date of Issue：2021 年 09 月 17 日

【型式の区分 Type Classification**】**

型式区分管理 No: (Type Classification Control No:) ： CL-01

証明書番号 (Certificate No.) ： JD 50518747

特定電気用品名 (Name of Specified Electrical Appliance and Material) ： 直流電源装置 DC Power Supply Unit

申請者 (Applicant) ： **Delta Electronics (Jiangsu) Ltd.**

海外製造事業者 (Overseas Manufacturer/factory) ： **Delta Electronics (Jiangsu) Ltd.**

要素 Factor	区分 Classification
定格入力電圧 (Rated input voltage)	125V 以下のもの及び 125V を超えるもの (125V or less, and exceeding 125V)
入力側の定格容量 (Rated capacity on input side)	100VA を超え 200VA 以下のもの (Exceeding 100VA, and less than or equal to 200VA)
定格周波数（変圧器を有するものの場合に限る。） (Rated frequency (limited to those with transformer)	50Hz のもの及び 60Hz のもの (50Hz, and 60Hz)
交流用端子 (AC terminal)	ないもの (Without AC terminal)
直流定格電圧 (Rated DC voltage)	15V 以下のもの (15V or less)
変圧器 (Transformer)	あるもの (With transformer)
変圧器の巻線の絶縁の種類 (Transformer winding insulation class)	B 種のもの (Class B)
直流電圧の調整装置 (DC voltage adjusting mechanism)	ないもの (Without adjusting mechanism)
回路の保護機構 (Circuit protection device)	あるもの (With circuit protection device)
器体スイッチ (Body switch)	ないもの (Without body switch)
外郭の材料 (Outer case material)	合成樹脂のもの (Plastic)
用途 (Application)	電池充電用のもの及びその他のもの (For battery charging, and Others)
電源電線と器体との接続の方式 (Method of attaching power supply cord)	接続器利用のもの (Coupling device)
二重絶縁 (Double insulation)	施してないもの (Without double insulation)

テュフ　ラインランド　台湾リミテッド
TÜV Rheinland Taiwan Ltd.
１１階、７５８、パートウロード、セクション４、ショウサン区、台北１０５、台湾
11F, No. 758, Bade Rd., Sec. 4, Songshan Dist., Taipei 105, Taiwan, R.O.C.

発行者 Issued by

氏名 Name Best Chen
ベスト　チェン

10/020 d 04.08 ® TÜV, TUEV and TUV are registered trademarks. Utilisation and application requires prior approval.

【写し Authorized Valid Copy】

適合同等証明書

Equivalent of the Certificate of Conformity

TÜVRheinland®

証明書番号 Certificate No.	ページ Page
JD 50518747	1

申請者照会番号 Applicant Reference	検査機関照会番号 Our Reference	発行年月日 Date of Issue
Laip-238519461	ZTW1-BCC-CN21ZO6A 001	2021 年 09 月 17 日

申請者 Applicant

Delta Electronics (Jiangsu) Ltd.

215200, No. 1688, Jiangxing East Road, Wujiang Economic and Technological Development Zone, Suzhou City, Jiangsu Province, P. R. China

製造工場 Manufacturing Plant

Delta Electronics (Jiangsu) Ltd.

215200, No. 1688, Jiangxing East Road, Wujiang Economic and Technological Development Zone, Suzhou City, Jiangsu Province, P. R. China

TÜV RT PSE

検査の方法 Inspection Method

・技術上の基準を定める省令の解釈 別表第十二：J62368-1(2020), J55032(H29), J3000(H25)
Interpretation on Ministerial Ordinance establishing Technical Requirements Appendix 12: J62368-1(2020), J55032(H29), J3000(H25)

・施行規則別表第四（交流用電気機械器具）
Appendix 4 of the Enforcement Regulations (AC Electric Appliances)

特定電気用品名
Name of Specified Electrical Appliance and Material
：直流電源装置
DC Power Supply Unit

型式の区分
Type Classification
：（「添付 1.0」参照）
(Refer to "Attachment 1.0")

証明書の有効期間
Validity of Certificate
：本証明書は、施行令で規定された期間である 2026 年 09 月 16 日まで有効です。
This certificate is effective until 16 September, 2026, being the period stipulated by the Enforcement Ordinance.

電気用品安全法第 8 条第 1 項に規定する技術基準及び同法第 9 条第 2 項の経済産業省令で定める基準（法第 9 条第 1 項第 2 号に係る検査に係るものに限る）に適合していることを証明します。
This is to certify that the above-mentioned Specified Electrical Appliances and Materials complies with the technical requirements stipulated in Paragraph 1 of Article 8 of Electrical Appliances and Materials Safety Act (here under referred to as the Act) and the requirements defined by the ordinance of the Ministry of Economy, Trade and Industry based on Paragraph 2 of Article 9 of the Act (limited to Item 2 of Paragraph 1 of Article 9 for Inspection of the Act).

注意事項 Notes

(1) この適合同等証明書は、提出された試験用の電気用品に関して評価を行った上で交付したものであり、同一の型式の区分にある電気用品について電気用品安全法第 8 条第 1 項に規定する技術基準適合確認の義務を履行したことを示すものではありません。
This Certificate of Conformity is issued only for those submitted test samples that are in conformity with Technical Requirements. It does not mean, for electrical products within the same classification, that the manufacturer has fulfilled the obligation to be in compliance with the technical standards specified based on Article 8, Item 1 of the Electrical Appliance and Material Safety Act.

(2) この適合同等証明書は、別紙に記載されている型式の区分の範囲内及び区分の組み合わせについてのみ有効です。
This Certificate of Conformity is valid only in conjunction with type classification sheet(s) specified as attached.

注記：本「写し」は、電気用品安全法施行規則第十三条第一号に基づき上記申請者の申請を受けて交付するものであり、本写しを申請者から受け取る輸入事業者は同法の要件を遵守しなければならない。NOTE: This Authorized Valid Copy is issued by receiving an application from the above applicant in accordance with Article 13, Item 1 of the Enforcement Regulations of Electrical Appliance and Material Safety Act. The Importer receiving this Authorized Valid Copy from the applicant shall comply with the requirements of the said Act.

テュフ ラインランド 台湾リミテッド
TÜV Rheinland Taiwan Ltd.

１１階、７５８、パートウロード、セクション４、ショウサン区、台北１０５、台湾
11F, No. 758, Bade Rd., Sec. 4, Songshan Dist., Taipei 105, Taiwan, R.O.C.

発行者 Issued by

氏名 Name BestChen ベスト チェン

TÜV Rheinland Taiwan Ltd. Certification Body

10/020 d 04.08 © TÜV, TUEV and TUV are registered trademarks. Utilisation and application requires prior approval.

【写し Authorized Valid Copy】

TÜVRheinland®

添付 Attachment：1.0　　発行日 Date of Issue：2021 年 09 月 17 日

【型式の区分 Type Classification**】**

型式区分管理 No: (Type Classification Control No:) ： CL-02

証 明 書 番 号 (Certificate No.) ： JD 50518747

特 定 電 気 用 品 名 (Name of Specified Electrical Appliance and Material) ： 直流電源装置 DC Power Supply Unit

申 請 者 (Applicant) ： **Delta Electronics (Jiangsu) Ltd.**

海外製造事業者 (Overseas Manufacturer/factory) ： **Delta Electronics (Jiangsu) Ltd.**

要 素 Factor	区 分 Classification
定格入力電圧 (Rated input voltage)	125V 以下のもの及び 125V を超えるもの (125V or less, and exceeding 125V)
入力側の定格容量 (Rated capacity on input side)	100VA を超え 200VA 以下のもの (Exceeding 100VA, and less than or equal to 200VA)
定格周波数（変圧器を有するものの場合に限る。） (Rated frequency (limited to those with transformer)	50Hz のもの及び 60Hz のもの (50Hz, and 60Hz)
交流用端子 (AC terminal)	ないもの (Without AC terminal)
直流定格電圧 (Rated DC voltage)	15V を超え 30V 以下のもの (Exceeding 15V, and less than or equal to 30V)
変圧器 (Transformer)	あるもの (With transformer)
変圧器の巻線の絶縁の種類 (Transformer winding insulation class)	B 種のもの (Class B)
直流電圧の調整装置 (DC voltage adjusting mechanism)	ないもの (Without adjusting mechanism)
回路の保護機構 (Circuit protection device)	あるもの (With circuit protection device)
器体スイッチ (Body switch)	ないもの (Without body switch)
外郭の材料 (Outer case material)	合成樹脂のもの (Plastic)
用途 (Application)	電池充電用のもの及びその他のもの (For battery charging, and Others)
電源電線と器体との接続の方式 (Method of attaching power supply cord)	接続器利用のもの (Coupling device)
二重絶縁 (Double insulation)	施してないもの (Without double insulation)

テュフ　ラインランド　台湾リミテッド
TÜV Rheinland Taiwan Ltd.
１１階、７５８、パートウロード、セクション４、ショウサン区、台北１０５、台湾
11F, No. 758, Bade Rd., Sec. 4, Songshan Dist., Taipei 105, Taiwan, R.O.C.

発行者 Issued by

氏名 Name　Best Chen ベスト・チェン

TÜVRheinland Taiwan Ltd. TÜVRheinland Certification Body

10/020 d 04.08 ® TÜV, TUEV and TUV are registered trademarks. Utilisation and application requires prior approval.

16 Tungyuan Road,
Chungli Industrial Zone,
Taoyuan County 32063, Taiwan

REACH Compliance Declaration

We hereby certify that products manufactured by Delta Electronics, Inc. are fully comply with requirements of European Union Regulation (EC) 1907/2006 concerning the Registration, Evaluation, Authorization and Restriction of Chemicals (REACH).

- With regard to the requirements of Article 33 of REACH: Duty to communicate information on substances in articles. We declare that some of the SVHCs (the Candidate List of Substances of Very High Concern for authorization currently released by ECHA till the date of July 8, 2021) are present in Delta' s products in concentrations above 0.1%.

Chemical substances	CAS No.	Concentration	Note
Lead oxide	1317-36-8	500000 ppm	RoHS Exemptions 7(c)
Lead	7439-92-1	950000 ppm	RoHS Exemptions 7(a) RoHS Exemptions 6(a)
Potassium perfluorobutane sulfonate (KPFBS)	29420-49-3	5000 ppm	Insulator

- With regard to the requirement of Article 67 of REACH : A substance on its own, in a preparation or in an article, for which Annex XVII, contains a restriction shall not be manufactured, placed on the market or used unless it complies with the conditions of that restriction. We declare that none of the substances in the conditions of restriction is present in Delta' s products.

-Comply ANNEX XVII entry51, combination of DBP, BBP, DIBP, DEHP is less than 1000 ppm.

Certify model list: Please refer list below

Signature: Kendy Cho
Name: Kendy Cho
Title: Assistant Manager
Date: November 12, 2021

3 Tungyuan Road,
Chungli Industrial Zone,
Taoyuan County 32063, Taiwan

DECLARATION OF CONFORMITY

Delta declare that we are following the RoHS Directive 2011/65/EU and EU/2015/863 to ban hazardous substances in the products. Products delivered to your company or your subsidiary/associated companies directly or via third parties. Packages used for our products also comply with Directive 94/62/EC.

Certified Part:

Delta Part Number	RoHS Status	Exemptions
Please refer list below	Compliant with Exemptions	6c, 7a, 7c

6(c) Copper alloy containing up to 4% lead by weight.
7(a) Lead in high melting temperature type solders (i.e. lead-based alloys containing 85% by weight or more lead).
7(c)-I Electrical and electronic components containing lead in a glass or ceramic other than dielectric ceramic in capacitors, e.g. piezoelectronic devices, or in a glass or ceramic matrix compound.
7(c)-II Lead in dielectric ceramic in capacitors for a rated voltage of 125V AC or 250V DC or higher.

Delta Electronics, Inc.

Signature: .....Kendy Cho.....

Date: May 12, 2021

Name: Mr. Kendy Cho

Phone: 886-34526107 #7710

Title: Assistant Manager

Email: Kendy.cho@deltaww.com

Notwithstanding the foregoing, Delta does not confirm and assure RoHS Directive compliance and does not assume any liability based on claims and/or damages resulting from (i) materials and/or components consigned and/or designated by Customer; or ii) Buy-and- Sell components; or iii) compliance to specifications originated from and/or furnished by Customer to Delta.

Anlage Fertigungsstättenliste
/Attachment List of Factories

R 50456389 0001

Anlagenrevision / Annex revision 1

1 Delta Electronics (Thailand) Public Co., Ltd.
909 Soi 9 Moo 4, Bangpoo Industrial Estate (E.P.Z.), Pattana 1 Road,
Tambol Phraksa, Amphur Muang,
Samutprakarn 10280
Thailand

2 Delta Electronics (Jiangsu) Ltd.
215200, No.1688, Jiangxing East Road,
Wujiang Economic and Technological Development Zone
Suzhou City, Jiangsu Province
P.R. China

3 Delta Electronics (Dongguan) Co., Ltd.
No.33, Pantao Road, Shijie Town,
Dongguan, Guangdong 523308,
P.R. China

Dieser Anhang ersetzt den Vorgänger vom/
This annex replaces the previous annex dated

Datum / Date 02.01.2020

Zertifizierungsstelle
/ Certification Body

Dipl.-Ing. W. Hsu

10/020 d 04.08 ® TÜV, TUEV and TUV are registered trademarks. Utilisation and application requires prior approval.

Zertifikat *Certificate*

TÜVRheinland®

Zertifikat Nr. *Certificate No.*
R 50456389

Blatt *Sheet*
0001

Ihr Zeichen *Client Reference*	Unser Zeichen *Our Reference*	Ausstellungsdatum *Date of Issue*
EISBG-102P-201910007	ZTW1--50328680 001	02.01.2020 *(day/mo/yr)*

Genehmigungsinhaber *License Holder*
Delta Electronics, Inc.
3, Tungyuan Road,
Chungli Industrial Zone
Taoyuan City 32063
Taiwan

Fertigungsstätte *Manufacturing Plant*
Refer to latest revision
of the annex list of factories

Prüfzeichen *Test Mark*

TÜVRheinland® ZERTIFIZIERT
Regelmäßige Produktionsüberwachung
Sicherheit
Bauart geprüft
www.tuv.com
ID 1419077140

Geprüft nach *Tested acc. to*
IEC 60601-1:2005+A1
EN 60601-1:2006+A11+A1+A12
IEC 60601-1-6:2010+A1
EN 60601-1-6:2010+A1
IEC 62366:2007+A1
EN 62366:2008+A1

Zertifiziertes Produkt (Geräteidentifikation)
Certified Product (Product Identification)

Lizenzentgelte - Einheit
License Fee - Unit

Externes Schaltnetzteil (AC/DC MEDICAL ADAPTER)

Bezeichnung (Type Designation)	: MEA-065A12C	8
Nennspannungen (Rated Voltages)	: AC 100-240V, 50-60Hz	
Nennströme (Rated Currents)	: 1.5-0.75A	
Ausgänge (Outputs)	: DC 12V/5A	

Schutzklasse (Protection Class) : I
Max. Betriebshöhe (Max. Operating Altitude) : 5000m
Max. Umgebungstemperatur (Max. Ambient Temperature) : 40°C (full load)
60°C (de-rating half load)
Vermerk: Die Prüfecke ist mit dem Endgerät zu berücksichtigen, da die Temperaturprüfungen beim erster Fehler Überlast nicht mit der Prüfecke bewertet wurden.
Remark: Test corner shall be considered in end application, since the temperature tests of single fault condition (overload) were not considered test corner.

8

ANLAGE (Appendix): 1

Dem Zertifikat liegt unsere Prüf- und Zertifizierungsordnung zugrunde und es bestätigt die Konformität des Produktes mit den oben genannten Standards und Prüfgrundlagen. Zusätzliche Anforderungen in Ländern, in denen das Produkt in Verkehr gebracht werden soll, müssen zusätzlich betrachtet werden. Die Herstellung des zertifizierten Produktes wird überwacht.
This certificate is based on our Testing and Certification Regulation and states the conformity of the product with the standards and testing requirements as indicated above. Any additional requirements in countries where the product is going to be marketed have to be considered additionally. The manufacturing of the certified product is subject to surveillance.

Zertifizierungsstelle

TÜVRheinland LGA Products GmbH Zertifizierungsstelle

Dipl.-Ing. W. Hsu

TÜV Rheinland LGA Products GmbH, Tillystraße 2, 90431 Nürnberg
Tel.: +49 221 806-1371 e-mail: cert-validity@de.tuv.com
Fax: +49 221 806-3935 http://www.tuv.com/safety

10/020 d 04.08 ® TÜV, TUEV and TUV are registered trademarks. Utilisation and application requires prior approval.

Anlage Fertigungsstättenliste
/Attachment List of Factories

R 50456389 0001

1 Delta Electronics (Jiangsu) Ltd.
215200, No.1688, Jiangxing East Road,
Wujiang Economic and Technological
Development Zone, Suzhou City,
Jiangsu Province
P. R. China

2 Delta Electronics (Thailand)
Public Co., Ltd.
909 Soi 9 Moo 4, Bangpoo Industrial
Estate (E.P.Z.), Pattana 1 Road
Tambol Phraksa, Amphur Muang,
Samutprakarn 10280
Thailand

Dieser Anhang ersetzt den Vorgänger vom/
This annex replaces the previous annex dated

Datum / Date 02.01.2020

Zertifizierungsstelle
/ Certification Body

Dipl.-Ing. W. Hsu

TÜV Rheinland LGA Products GmbH
TÜVRheinland
Zertifizierungsstelle

10/020 d 04.08 ® TÜV, TUEV and TUV are registered trademarks. Utilisation and application requires prior approval.

Zertifikat *Certificate*

TÜVRheinland®

Zertifikat Nr. *Certificate No.*
R 50456389

Blatt *Sheet*
0002

Ihr Zeichen *Client Reference*	Unser Zeichen *Our Reference*	Ausstellungsdatum	*Date of Issue*
EISBG-102P-201910007	ZTW1--50328680 001	02.01.2020	*(day/mo/yr)*

Genehmigungsinhaber *License Holder*
Delta Electronics, Inc.
3, Tungyuan Road,
Chungli Industrial Zone
Taoyuan City 32063
Taiwan

Fertigungsstätte *Manufacturing Plant*
Refer to latest revision
of the annex list of factories

Prüfzeichen *Test Mark*

TÜVRheinland® ZERTIFIZIERT
Regelmäßige Produktionsüberwachung
Sicherheit
Bauart geprüft
www.tuv.com
ID 1419077140

Geprüft nach *Tested acc. to*
IEC 60601-1:2005+A1
EN 60601-1:2006+A11+A1+A12
IEC 60601-1-6:2010+A1
EN 60601-1-6:2010+A1
IEC 62366:2007+A1
EN 62366:2008+A1

Zertifiziertes Produkt (Geräteidentifikation)
Certified Product (Product Identification)

Lizenzentgelte - Einheit
License Fee - Unit

Externes Schaltnetzteil (AC/DC MEDICAL ADAPTER)

Wie Blatt (As Page) 01

Bezeichnung (Type Designation)	: 1)	MEA-065A15C	1
	2)	MEA-065A19C	1
	3)	MEA-065A24C	1
Ausgänge (Outputs)	: 1)	DC 15V/4.33A	
	2)	DC 19V/3.42A	
	3)	DC 24V/2.71A	

3

ANLAGE (Appendix): 1

Dem Zertifikat liegt unsere Prüf- und Zertifizierungsordnung zugrunde und es bestätigt die Konformität des Produktes mit den oben genannten Standards und Prüfgrundlagen. Zusätzliche Anforderungen in Ländern, in denen das Produkt in Verkehr gebracht werden soll, müssen zusätzlich betrachtet werden. Die Herstellung des zertifizierten Produktes wird überwacht.
This certificate is based on our Testing and Certification Regulation and states the conformity of the product with the standards and testing requirements as indicated above. Any additional requirements in countries where the product is going to be marketed have to be considered additionally. The manufacturing of the certified product is subject to surveillance.

TÜV Rheinland LGA Products GmbH, Tillystraße 2, 90431 Nürnberg
Tel.: +49 221 806-1371 e-mail: cert-validity@de.tuv.com
Fax: +49 221 806-3935 http://www.tuv.com/safety

Zertifizierungsstelle

TÜV Rheinland LGA Products GmbH TÜVRheinland® Zertifizierungsstelle

Dipl.-Ing. W. Hsu

10/020 d 04.08 ® TÜV, TUEV and TUV are registered trademarks. Utilisation and application requires prior approval.

CERTIFICATE OF COMPLIANCE

Certificate Number	2023-01-16-E356265
Report Reference	E356265-D1078-1/A1/C0
Date	2023-01-16
Issued to:	DELTA ELECTRONICS INC
Applicant Company:	3 TUNGYUAN ROAD CHUNGLI INDUSTRIAL ZONE TAOYUAN CITY 32063 TAIWAN
Listed Company:	Same as Applicant
This is to certify that representative samples of	AC/DC Medical Adapter MEA-065A12C, MEA-065A15C, MEA-065A19C, MEA-065A24C
	Have been investigated by UL in accordance with the component requirements in the Standard(s) indicated on this Certificate. UL Recognized components are incomplete in certain constructional features or restricted in performance capabilities and are intended for installation in complete equipment submitted for investigation to UL LLC.
Standard(s) for Safety:	AAMI ES60601-1:2005, ES60601-1:2005/AMD1:2012, ES60601-1:2005/AMD2:2021; CAN/CSA-C22.2 No. 60601-1:08, CAN/CSA-C22.2 No. 60601-1:14 (including amendment 1), and Amendment 2:2022 (MOD) to CAN/CSA-C22.2 No. 60601-1:14
Additional Standards:	AAMI ES60601-1:2005, ES60601-1:2005/AMD1:2012, ES60601-1:2005/AMD2:2021; CAN/CSA-C22.2 No. 60601-1:08, CAN/CSA-C22.2 No. 60601-1:14 (including amendment 1), and Amendment 2:2022 (MOD) to CAN/CSA-C22.2 No. 60601-1:14; EN 60601-1:2006/ A1:2013/ A12:2014/ A2:2021
Additional Information:	See the UL Online Certifications Directory at https://iq.ulprospector.com for additional information.

This Certificate of Compliance does not provide authorization to apply the UL Recognized Component Mark. Only the UL Follow-Up Services Procedure provides authorization to apply the UL Mark.

Only those products bearing the UL Recognized Component Mark should be considered as being UL Certified and covered under UL's Follow-Up Services.

Bruce Mahrenholz, Director North American Certification Program

UL LLC

Any information and documentation involving UL Mark services are provided on behalf of UL LLC (UL) or any authorized licensee of UL. For questions, please contact a local UL Customer Service Representative at http://ul.com/aboutul/locations/