REV	DATE	DESCRIPTION	DRAFT	APPROVED
0	Jul-26-26	INITIAL RELEASE	Owen	

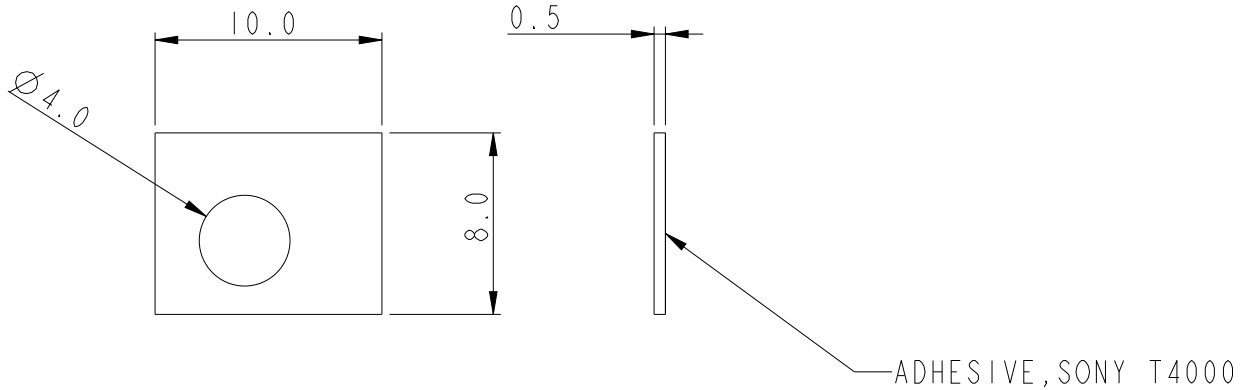

NOTE:
1. Material:
CR, T=0.5MM+SONY T4000
2. RoHS Compliant.
3. DIVA QC Inspection Document NO.:
QWI-020 (Plastic)

UNLESS OTHERWISE SPECIFIED
ALL DIMENSIONS ARE IN MM.
TOLERANCES:

.X = ± 0.5
.XX = ± 0.30
.XXX = ± 0.150
ANGLE = ± 1.0°

INTERPRET DIM AND TOL
PER ASME Y14.5-2009

THIRD ANGLE PROJECTION

MATERIAL: sponge
FINISH:

DRAWN BY: Owen Jul-26-26

CHECKED BY

APPROVED BY

Creo FILE NAME: PANEL_SPONGE_AUO

APPROVED NO.:

DIVA Laboratories. Ltd.

PART NAME:

PART NUMBER:

MFG. PART NUMBER

MODEL NAME:	SIZE:	SCALE:	SHEET:	REV
QD11_21.5"	A4	3/1	1 OF 1	0

THIS DOCUMENT IS SUPPLIED IN CONFIDENCE. NO REPRODUCTION OF THIS DOCUMENT IN PART OR IN WHOLE OR THEREON OF THE ITEMS SHOWN MAY BE MADE WITHOUT THE COPYRIGHT OWNERS WRITTEN PERMISSION.

ASME STANDARD, MM