Comparison Report

Package Dimension

OLD ：3FM00300822

AC SOCKET (R-301SN(B298),RICH BAY)

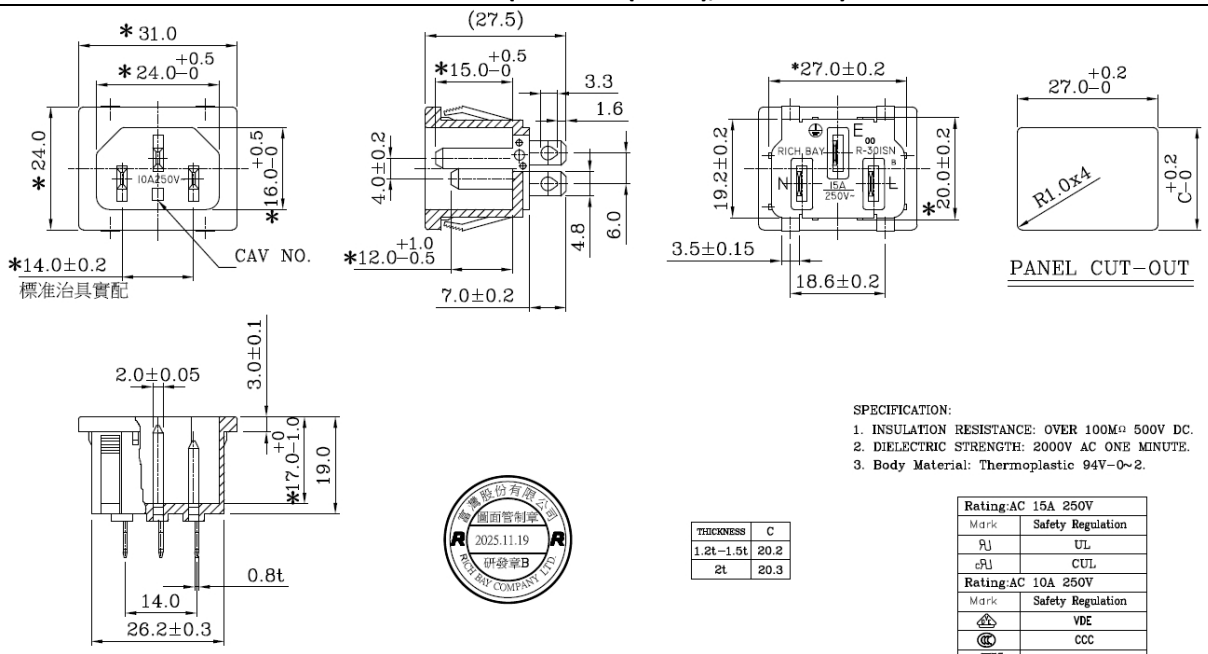

SPECIFICATION:
1. INSULATION RESISTANCE: OVER 100MΩ 500V DC.
2. DIELECTRIC STRENGTH: 2000V AC ONE MINUTE.
3. Body Material: Thermoplastic 94V−0~2.

THICKNESS	C
1.2t−1.5t	20.2
2t	20.3

Rating:AC 15A 250V	
Mark	Safety Regulation
	UL
	CUL
Rating:AC 10A 250V	
Mark	Safety Regulation
	VDE
	CCC
	ENEC

NEW : 3FM00300823

AC SOCKET (R-301SN(B00)-Z,RICH BAY)

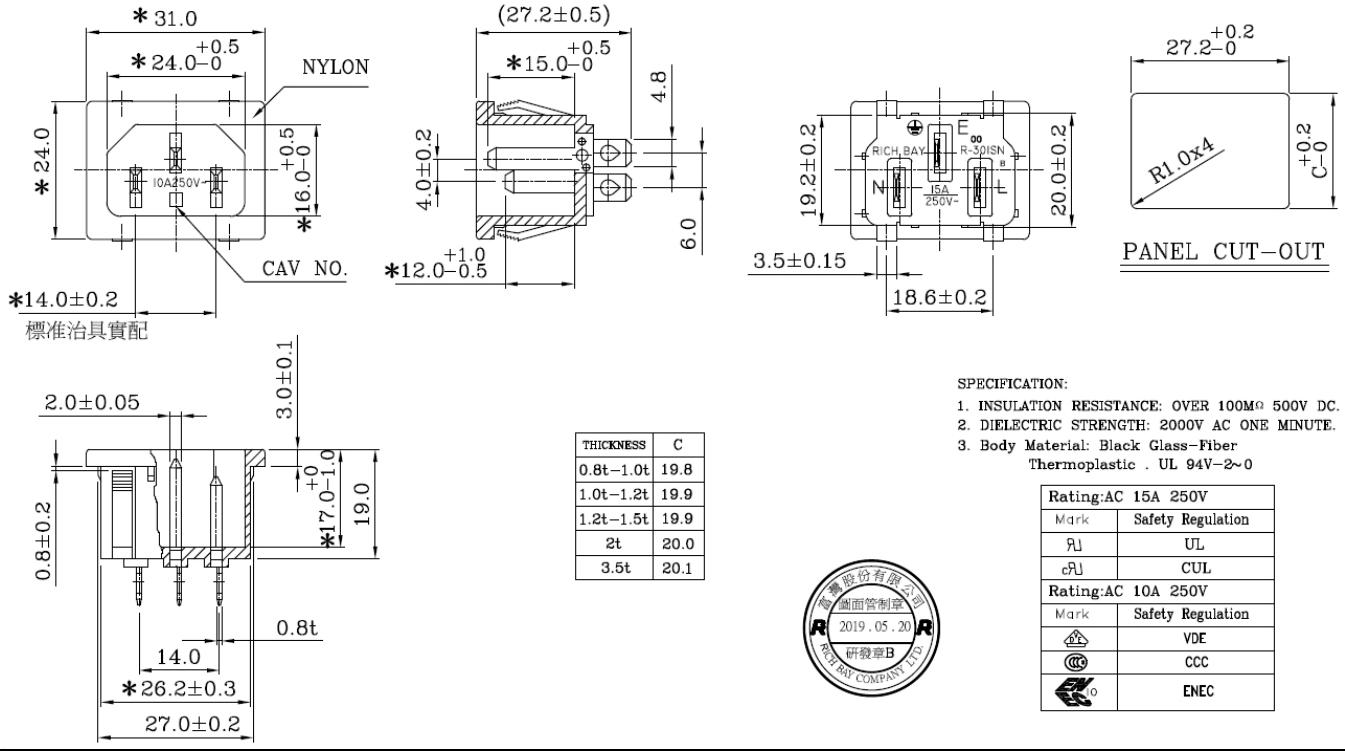

THICKNESS	C
0.8t−1.0t	19.8
1.0t−1.2t	19.9
1.2t−1.5t	19.9
2t	20.0
3.5t	20.1

SPECIFICATION:
1. INSULATION RESISTANCE: OVER 100MΩ 500V DC.
2. DIELECTRIC STRENGTH: 2000V AC ONE MINUTE.
3. Body Material: Black Glass−Fiber Thermoplastic . UL 94V−2~0

Rating:AC 15A 250V	
Mark	Safety Regulation
	UL
	CUL
Rating:AC 10A 250V	
Mark	Safety Regulation
	VDE
	CCC
	ENEC

Comparison Report

OLD ：3KH0007734A

AC SOCKET(R-301SN(B298))&GND WIRE,YOMIN

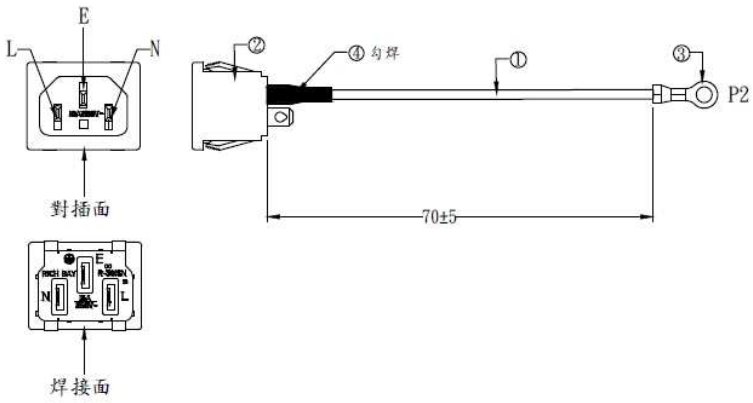

配線表：

P1	顏色	P2
E	黃/綠	TER
其他:NC		

NOTE:1.P1端焊接處,線材需脫皮10mmREF,捻線后全鍍錫并折彎（見圖示）.
2.線材需穿好套管,用橡皮筋扎好.

項目	材料名稱	用量
1	WIRE:UL1015#18 -LF- (REI HSING) 顏色:黃/綠	L=79mm 1PCS
2	電源插座:富灣 R-301SN(B298) 臺北購買	1PCS
3	TERMINAL:WST-B40405BS-2 限用	1PCS
4	HEAT SHRINK TUBE:BLACK 5.0Φ L=15±2mm 厚	1PCS



3

NEW : 3KH0007734B

AC SOCKET(R-301SN(B00)-Z &GND WIRE,YOMIN

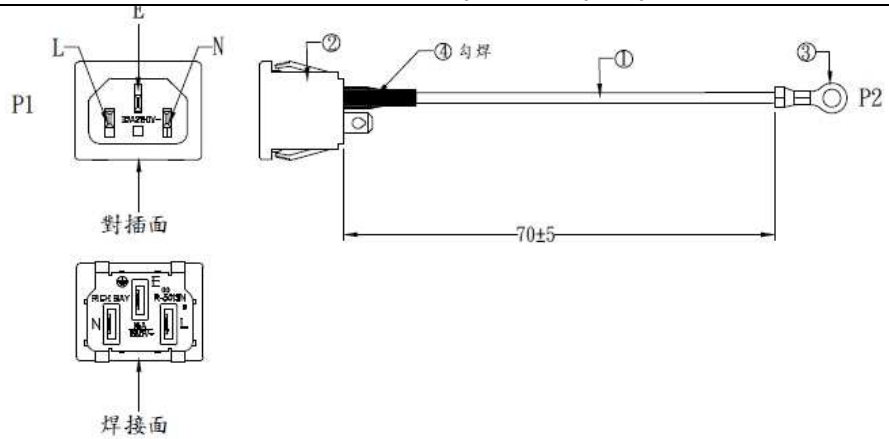

配線表：

P1	顏色	P2
E	黃/綠	TER
其他:NC		

NOTE:1.P1端焊接處,線材需脫皮10mmREF,捻線后全鍍錫并折彎（見圖示）.
2.線材需穿好套管,用橡皮筋扎好.

項目	材料名稱	用量
1	WIRE:UL1015#18 -LF- (REI HSING) 顏色:黃/綠	L=79mm 1PCS
2	電源插座:富灣 R-301SN(B00)-Z 臺北購買	1PCS
3	TERMINAL:WST-B40405BS-2 限用	1PCS
4	HEAT SHRINK TUBE:BLACK 5.0Φ L=15±2mm 厚	1PCS



3

DIVA Labs.

Comparison Report

PICTURES

Item	OLD ：3FM00300822 AC SOCKET (R-301SN(B00)-Z,RICH BAY)	NEW：3FM00300823 AC SOCKET (R-301SN(B00)-Z,RICH BAY)
Front View		
Top View	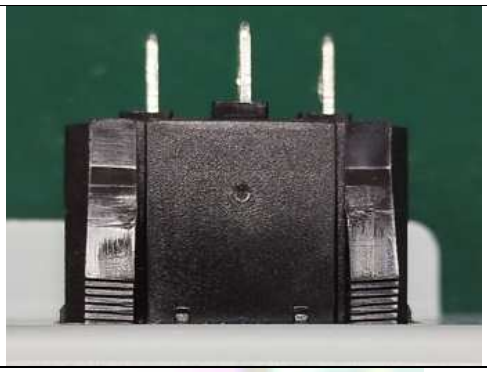	
Side View	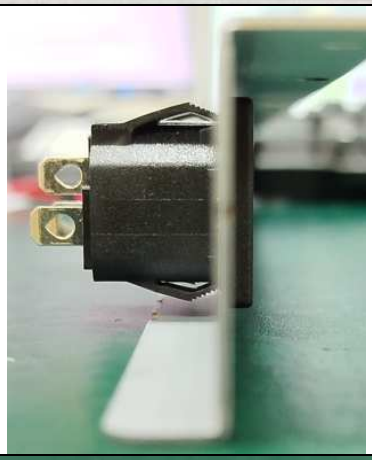	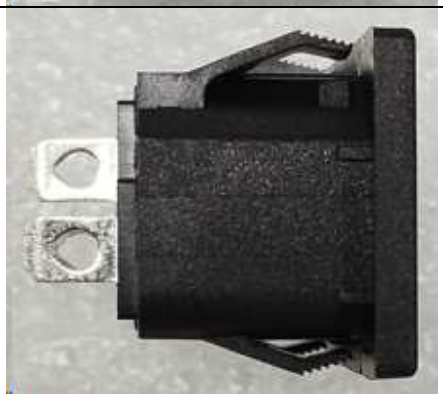
Back View		

DIVA Labs.

Comparison Report

Item	OLD ：3KH0007734A AC SOCKET(R-301SN(B298))&GND WIRE,YOMIN	NEW ：3KH0007734B AC SOCKET(R-301SN(B00)-Z &GND WIRE,YOMIN
Back View		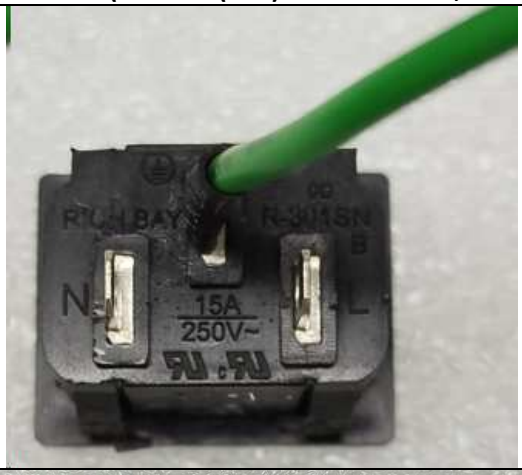
Side View		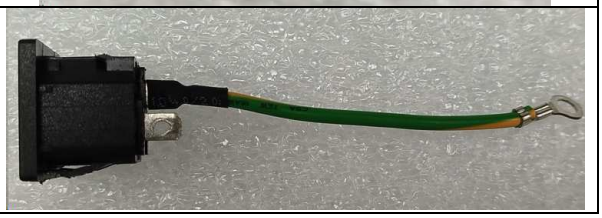

ELECTRICAL CHARACTERISTICS

Parameter	Symbol	Limits		Unit
		Old Part	New Part	
Type		AC Socket	AC Socket	
Insulation Resistance	R	100	100	MΩ
Dielectric Strength (@ 1 min)	V	2000	2000	VAC

MATERIAL CHARACTERISTICS

Parameter	Old Part	New Part
Body	UL 94V-2~0	UL 94V-2~0
Wire	UL1015#18 –LF–	UL1015#18 –LF–

CONCLUSION

This noncritical component change has been evaluated by DIVA; the initial successor evaluation showed the new successor is compatible with former model. None of the other components and program will be needed to recalibrate or implement. The ECN will be provided if you approve.