RoHS Compliant

Revision	Modify Record	Date
A/3	變更MINI DIN供應商	07/28/2026

Revision	Modify Record	Date
A/0	作 圖	08/05/2013
A/1	更改客戶料號為3KC00005220及補上插頭廠商與料號,線材印字	02/06/2015
A/2	補上螺絲廠商名稱	06/29/2015

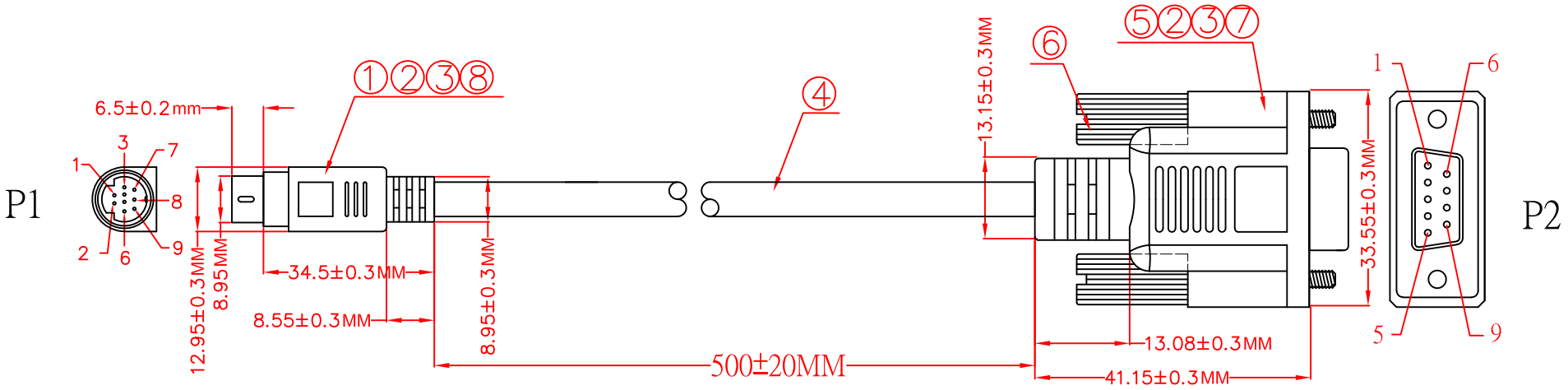

WIRING DIAGRAM

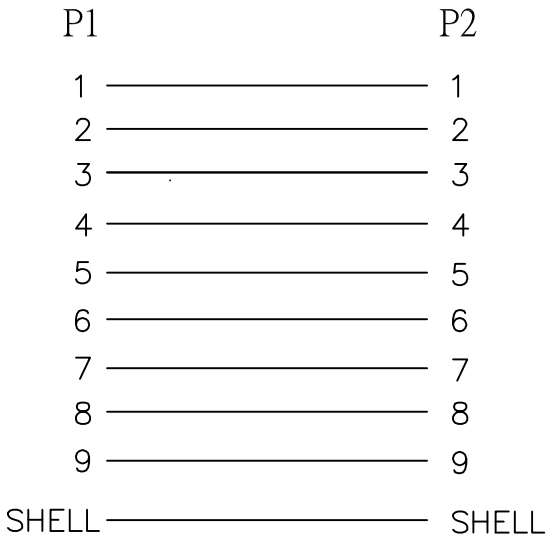

線材外被印字如下:(字高1.2MM,印白字)

E119932-U AWM 2464 80°C 300V 26AWG VW-1----------C

AWM I/IIA 80°C 300V 26AWG FTI COPARTNER

No.	Part No.	Q'ty	Units	Specification
8	50-9015-0008	1	PCS	PVC HEAT SHRINK TUBE BLCAK 1.5*8MM
7	50-9015-0015	1	PCS	PVC HEAT SHRINK TUBE ø1.5*15MM BLACK
6	88-2401-02	2	PCS	SCREW #4-40 37.5MM NICKEL PLATED(建信昌)
5	3600-JS-0901	1	PCS	DB9P FEMALE SOLDER TYPE 焊線前線後鍋黑膠(通泉: YQ-DB-09MBSiSS)
4	25-0926-010058	1	PCS	UL2464 26#+9C+AEB OD:6.0MM(96B) BLACK L:580MM
3	89-1001-0050	40	g	OUTER MOLDED PVC 50% BLACK
2	89-0000-0000	16	g	INNER MOLDED P.E
1	68-2100-0901-1	1	PCS	MINI DIN 9PIN MALE MOLD 端子: 車針式(精案: GT-MD029)

JAWSSTECH 兆鈺科技有限公司
JAWSSTECH TECHNOLOGIES LIMITED
地址:臺灣 新北市汐止區大同路二段171號3樓之3
TEL:886-02-86926686 FAX:886-02-86926343 Web:www.jawscable.com

Quality Symbols: ■ RoHS Compliant ☐ UL Approved

This drawing may not be copied or reproduced in any way,and may not be passed on to a third party without written permission.
Part-ownership and part-copyright of JAWS

Description	MINI 9P/M TO DB 9P/F CABLE		
Customer Name	YU WEI	Drawing No.	20130315
Customer No.	3KC00005220	Designed By	ZHANGYANGWU
Produce No.	13-210-E009	Approved By	
Date	03/24/2013	Scale	Not to scale

Third Angle Projection

Units: ■ MM ☐ Inch

Size: A4

RoHS Compliant

Revision	Modify Record	Date
A/3	變更MINI DIN供應商	07/28/2026
A/0	作 圖	08/19/2013
A/1	更改客戶料號為3KC00005220及補上插頭廠商與料號,線材印字	02/06/2015
A/2	補上螺絲廠商名稱	06/29/2015

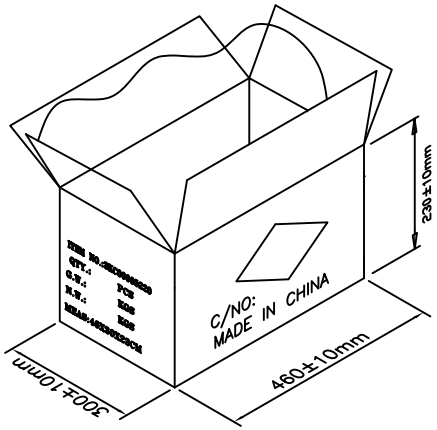

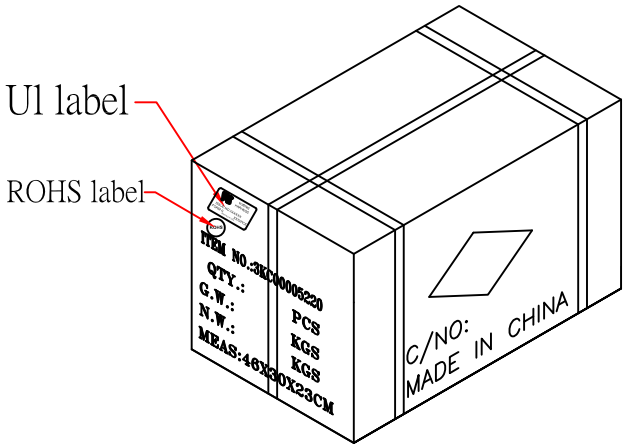

繞線方式:

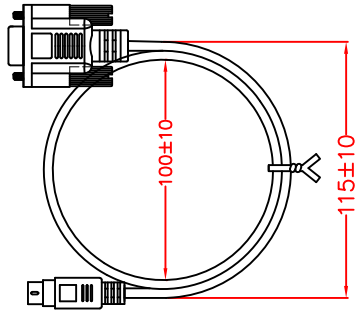

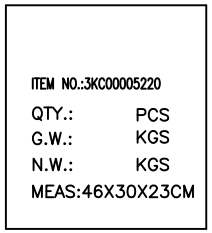

Side

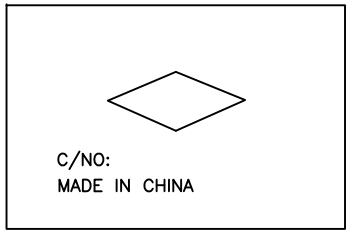

Front

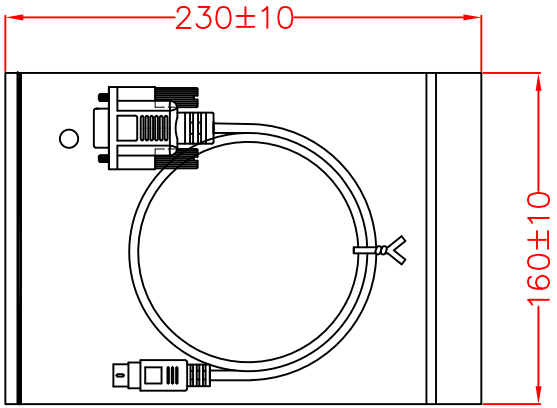

PE bag printing contect:



PLASTIC BAGS CAN BE DANGEROUS TO AVOID DANGER OF SUFFOCATION KEEP THIS WRAPPER AWAY FROM BABIES AND CHILDREN



Ul label

ROHS label

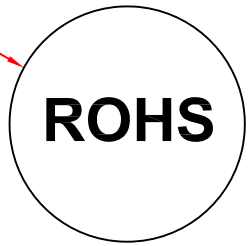

No.	Part No.	Q'ty	Units	Specification
5	95-001-00035		PCS	∮35mm ROHS label
4	99-030004428		PCS	PASTEBOARD: 440(L)*280(W)MM(A=A)
3	98-040072535		PCS	PE BAG:350(L)*250(W)*0.07(T)MM
2	98-040051623	1	PCS	PE BAG:230(L)*160(W)*0.05(T)MM
1	99-010463023		PCS	CARTON: 460(L)*300(W)*230(H)mm

JAWSSTECH 兆鈺科技有限公司
JAWSSTECH TECHNOLOGIES LIMITED
地址:臺灣 新北市汐止區大同路二段171號3樓之3
TEL:886-02-86926686 FAX:886-02-86926343 Web:www.jawscable.com

Quality Symbols
■ RoHS Compliant
□ UL Approved

This drawing may not be copied or reproduced in any way,and may not be passed on to a third party without written permission.
Part-ownership and part-copyright of JAWS

Description	MINI 9P/M TO DB 9P/F CABLE		
Customer Name	Yu Eei	Drawing No.	20130315
Customer No.	3KC00005220	Designed By	Zou Meiling
Produce No.	13-210-E009	Approved By	
Date	03/24/2013	Scale	Not to scale

Third Angle Projection

Units ■ MM □ Inch

Size A4