SUPER DARTER

承認書

SPECIFICATION FOR APPROVAL

客戶名稱: 鈺緯科技開發股份有限公司

日期: 2026-08-04

系列: WF08H Chip Res. 3RCxxxxD33Y (R0036)

WF12H, WF08H, WF06H, WF04H ±0.5%, ±0.1%

Brand Name: WALSIN

Approval By:

承認印:

設計驗證工程課
2026 -08- 07
發行
鈺緯科技開發股份有限公司

達而特企業股份有限公司
統一發票專用章
統一編號
23742666
負責人:朱榮輝
TEL:27892766
南港路3段80巷26號2F

達而特企業股份有限公司
SUPER DARTER CORPORATION
115台北市南港區南港路三段80巷26號2樓
2F, NO 26, LANE 80, SEC3, NANGANG RD, TAIPEI, TAIWAN, R.O.C.
TEL: 02-27892766 FAX: 02-27892767

項次	料　　號	原廠料號	規　　格
1		WF08HxxxxDTL	0805 10R-1M 0.5% 1/8W 100ppm

APPROVAL SHEET

WF10H, WF12H, WF08H, WF06H, WF04H

±0.5%, ±0.1%

Thick Film High Precision Chip Resistors

Size 1210, 1206, 0805, 0603, 0402

RoHS 2 Compliant with exemption7C-I

Halogen free

Walsin Technology Corporation
PASSIVE SYSTEM ALLIANCE
COPYRIGHT © WALSIN TECHNOLOGY CORPORATION. ALL RIGHTS RESERVED.

*Contents in this sheet are subject to change without prior notice.

Copyright © by Walsin Technology Corporation. | All rights reserved.

FEATURE

1. Small size and light weight
2. High reliability and stability
3. Reduced size of final equipment
4. High precision
5. Higher component and equipment reliability
6. RoHS 2 Compliant with exemption 7C-I and Halogen free products

APPLICATION

- Power supply
- PDA
- Digital meter
- Computer
- Palmtop computers

DESCRIPTION

The resistors are constructed in a high grade ceramic body (aluminum oxide). Internal metal electrodes are added at each end and connected by a resistive paste that is applied to the top surface of the substrate. The composition of the paste is adjusted to give the approximate resistance required and the value is trimmed to nominated value within tolerance which controlled by laser trimming of this resistive layer.

The resistive layer is covered with a protective coat. Finally, the two external end terminations are added. For ease of soldering the outer layer of these end terminations is a Tin (lead free) alloy.

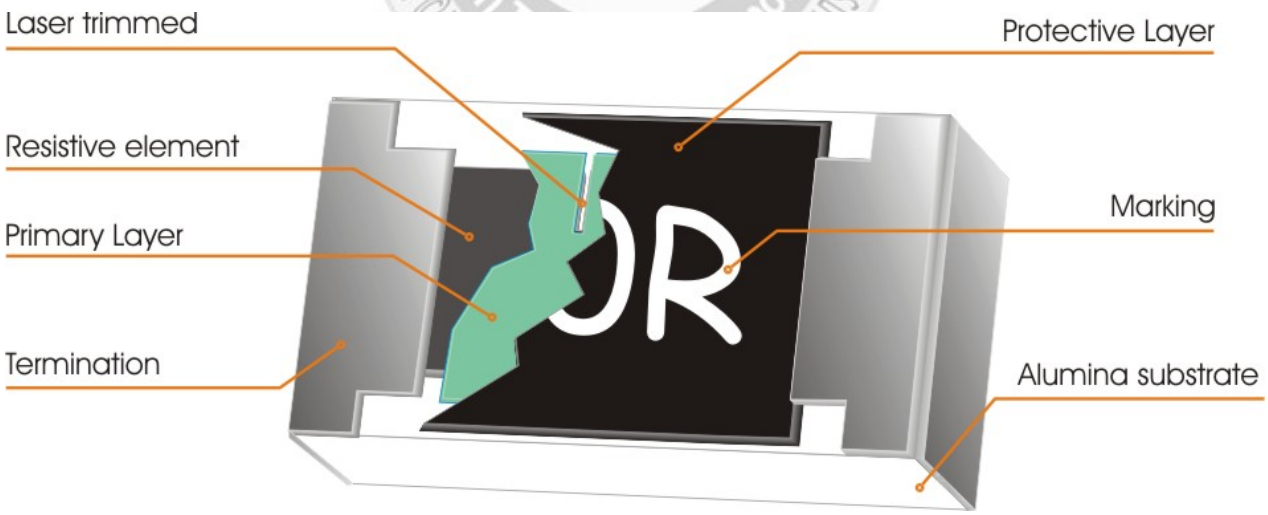

Fig 1. Construction of Chip-R

Copyright © by Walsin Technology Corporation. | All rights reserved.

QUICK REFERENCE DATA

Item	General Specification				
Series No.	WF10H	WF12H	WF08H	WF06H	WF04H
Size code	1210 (3226)	1206 (3216)	0805 (2125)	0603 (1608)	0402 (1005)
Resistance Range	10Ω ~ 1MΩ (E96+E24 series)				
Resistance Tolerance	±0.5%, ±0.1%				
TCR (ppm/°C) 10Ω≤ R ≤ 1MΩ	≤ ± 100 ppm/°C				
Max. dissipation at T_{amb}=70°C	1/2 W	1/4 W	1/8 W	1/10 W	1/16W
Max. Operation Voltage (DC or RMS)	200V	200V	150V	75V	50V
Max. overload voltage (DC or RMS)	400V	400V	300V	150V	100V
Climatic category	55/155/56				

Note :

1. This is the maximum voltage that may be continuously supplied to the resistor element, see “IEC publication 60115-8”
2. Max. Operation Voltage : So called RCWV (Rated Continuous Working Voltage) is determined by

$$RCWV = \sqrt{Rated\,Power \times Resistance\,Value}$$ or Max. RCWV listed above, whichever is lower.

DIMENSIONS(unit : mm)

Series No.	WF10H	WF12H	WF08H	WF06H	WF04H
L	3.10 ± 0.10	3.10 ± 0.1	2.0 ± 0.10	1.60 ± 0.10	1.00±0.05
W	2.60 ± 0.10	1.60 ± 0.1	1.25 ± 0.10	0.80 ± 0.10	0.50±0.05
Tt	0.50 ± 0.20	0.50 ± 0.2	0.40 ± 0.20	0.30 ± 0.10	0.20±0.10
Tb	0.50 ± 0.20	0.45 ± 0.2	0.40 ± 0.20	0.30 ± 0.20	0.25±0.10
T	0.55 ± 0.10	0.65 ± 0.15	0.5 ± 0.15	0.45 ± 0.15	0.35±0.05

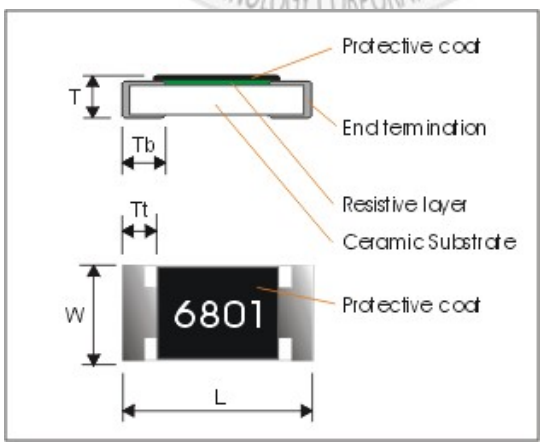

Copyright © by Walsin Technology Corporation. | All rights reserved.

CATALOGUE NUMBERS

The resistors have a catalogue number starting with :

WF06	H	3742	D	T	L
Size code WF10: 1210 WF12 : 1206 WF08 : 0805 WF06 : 0603 WF04 : 0402	**Type code** H : High precision, <1%	**Resistance code** E96+E24: 3 significant digits followed by no. of zeros 102Ω =1020 37.4KΩ =3742 220Ω =2200	**Tolerance** D : ±0.5% B : ±0.1%	**Packaging code** T : 7" Reeled taping	**Termination code** L = Sn base (lead free)

■ Reeled tape packaging: 8mm width paper taping 5,000pcs per 7" reel for 1210/1206/0805/0603,
10,000pcs per 7" reel for 0402.

MARKING

- **No marking code for 0402 size.**
- **3 digits marking for 0603 size:**

  WFxxH has same marking rule as WR ±1%

Nominal resistance	Description
1.E24 series	2 significant digits followed by No. of zeros .As *0603 WR06X* ±5% Example

RESISTANCE	4.7Ω	47Ω	470Ω	4K70	47K0	470K	4M70
3 digits marking	4R7	470	471	472	473	474	475

2.E96 series

The 1st two digit codes are referring to the CODE on the table, the 3rd code is the index of resistance value.
Repeat values between E24 and E96 series, whose marking are based on the E96 CODE table.

Code	Z	Y	X	A	B	C	D	E	F	G
Multiplier	10^{-3}	10^{-2}	10^{-1}	10^{0}	10^{1}	10^{2}	10^{3}	10^{4}	10^{5}	10^{6}

Example

RESISTANCE	1.78Ω	17.8Ω	178Ω	1K78	17K8	178K	1M78
3 digits marking	25Y	25X	25A	25B	25C	25D	25E

3. Remark: There is no marking for the items not under E24 and E96 series.

E96 CODE table:

CODE	R value	CODE	R-value	CODE	R-Value	CODE	R-value	CODE	R-value	CODE	R-value	CODE	R-value	CODE	R-value
01	**100**	13	**133**	25	**178**	37	**237**	49	**316**	61	**422**	73	**562**	85	**750**
02	**102**	14	**137**	26	**182**	38	**243**	50	**324**	62	**432**	74	**576**	86	**768**
03	**105**	15	**140**	27	**187**	39	**249**	51	**332**	63	**442**	75	**590**	87	**787**
04	**107**	16	**143**	28	**191**	40	**255**	52	**340**	64	**453**	76	**604**	88	**806**
05	**110**	17	**147**	29	**196**	41	**261**	53	**348**	65	**464**	77	**619**	89	**825**
06	**113**	18	**150**	30	**200**	42	**267**	54	**357**	66	**475**	78	**634**	90	**845**
07	**115**	19	**154**	31	**205**	43	**274**	55	**365**	67	**487**	79	**649**	91	**866**
08	**118**	20	**158**	32	**210**	44	**280**	56	**374**	68	**499**	80	**665**	92	**887**
09	**121**	21	**162**	33	**215**	45	**287**	57	**383**	69	**511**	81	**681**	93	**909**
10	**124**	22	**165**	34	**221**	46	**294**	58	**392**	70	**523**	82	**698**	94	**931**
11	**127**	23	**169**	35	**226**	47	**301**	59	**402**	71	**536**	83	**715**	95	**953**
12	**130**	24	**174**	36	**232**	48	**309**	60	**412**	72	**549**	84	**732**	96	**976**

4 digits marking（±1% : 1210,1206,0805）

Each resistor is marked with a four digits code on the protective coating to designate the nominal resistance value. For values below 97Ω6 the R is used as a digit. For values of 100Ω or greater, the first 3 digits are significant, and the fourth digit indicates the number of multiple to follow.

Example

RESISTANCE	10Ω	12Ω	100Ω	6800Ω	47000Ω	470000Ω
4 digits marking	10R0	12R0	1000	6801	4702	4703

Copyright © by Walsin Technology Corporation. | All rights reserved.

FUNCTIONAL DESCRIPTION

Product characterization

Standard values of nominal resistance are taken from the E96 & E24 series for resistors with a tolerance of ±0.5%, ±0.1%. The values of the E24/E96 series are in accordance with “IEC publication 60063”.

Derating

The power that the resistor can dissipate depends on the operating temperature; see Fig.2

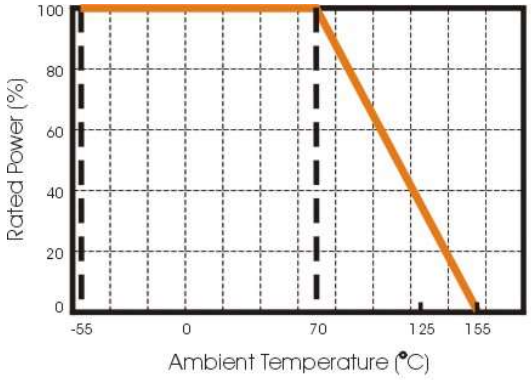

Figure 2. Maximum dissipation in percentage of rated power
As a function of the ambient temperature

MOUNTING

Due to their rectangular shapes and small tolerances, Surface Mountable Resistors are suitable for handling by automatic placement systems.

Chip placement can be on ceramic substrates and printed-circuit boards (PCBs).

Electrical connection to the circuit is by individual soldering condition.

Storage and Handling Conditions:

1. Products are recommended to be used up within two years since operation date as ensured shelf life. Check solderability in case shelf life extension is needed.
2. To store products with following condition:

   Temperature :5 to 40°C

   Humidity :20 to 70% relative humidity
3. Caution:

   a. Don't store products in a corrosive environment such as sulfide, chloride gas, or acid.

   It may cause oxdization of electrode, which easily be resulted in poor soldering.

   b. To store products on the shelf and avoid exposure to moisture.

   c. Don't expose products to excessive shock, vibration, direct sunlight and so on.

Copyright © by Walsin Technology Corporation. | All rights reserved.

SOLDERING CONDITION follows J-STD-020D

The robust construction of chip resistors allows them to be completely immersed in a solder bath of 260°C for 10 seconds. Therefore, it is possible to mount Surface Mount Resistors on one side of a PCB and other discrete components on the reverse (mixed PCBs).

Surface Mount Resistors are tested for solderability at 235°C during 2 seconds. The test condition for no leaching is 260°C for 30 seconds.

Typical examples of soldering processes that provide reliable joints without any damage are given in Fig 3

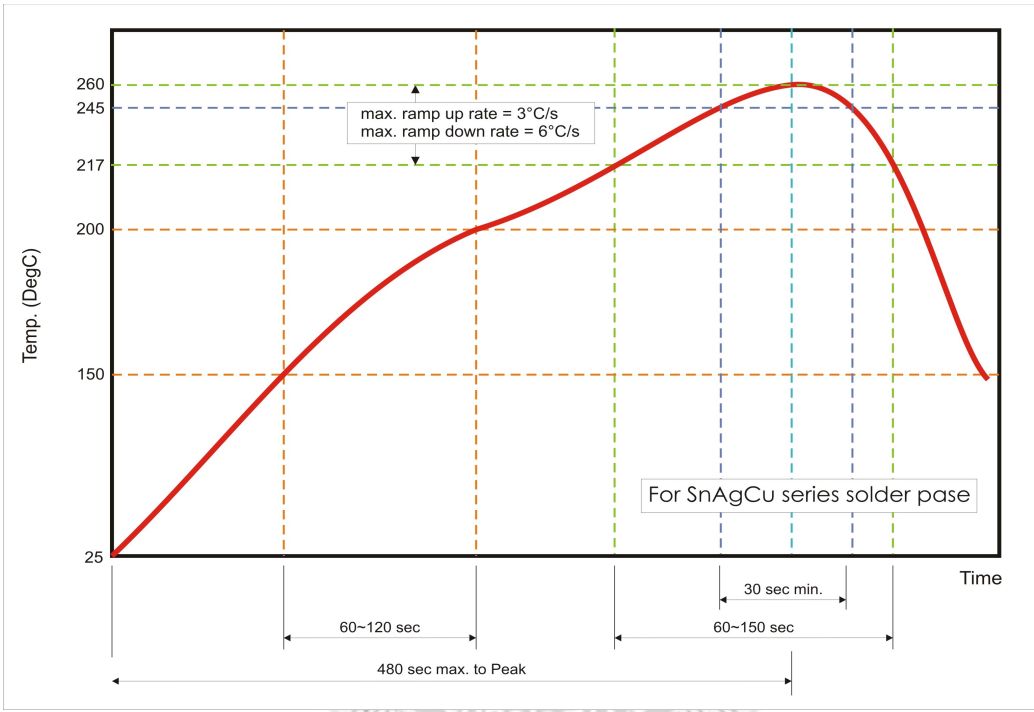

Fig 3. Recommended IR reflow soldering profile for SMT process with SnAgCu series solder paste

Copyright © by Walsin Technology Corporation. | All rights reserved.

TEST AND REQUIREMENTS (JIS C 5201-1 : 1998)

Essentially all tests are carried out according to the schedule of IEC publication 115-8, category **LCT**/**UCT**/56(rated temperature range : **L**ower **C**ategory **T**emperature, **U**pper **C**ategory **T**emperature; damp heat, long term, 56 days). The testing also meets the requirements specified by EIA, EIAJ and JIS.

The tests are carried out in accordance with IEC publication 68, "Recommended basic climatic and mechanical robustness testing procedure for electronic components" and under standard atmospheric conditions according to IEC 60068-1, subclause 5.3. Unless otherwise specified, the following value supplied :

Temperature: 15°C to 35°C.

Relative humidity: 45% to 75%.

Air pressure: 86kPa to 106 kPa (860 mbar to 1060 mbar).

All soldering tests are performed with midly activated flux.

TEST	PROCEDURE	REQUIREMENT
DC resistance **Clause 4.5**	DC resistance values measured at the test voltages specified below : <10Ω@0.1V, <100Ω@0.3V, <1KΩ@1.0V, <10KΩ@3V, <100KΩ@10V, <1MΩ@25V, <10MΩ@30V	Within the specified tolerance
Temperature Coefficient of Resistance(T.C.R) **Clause 4.8**	Natural resistance change per change in degree centigrade. $\frac{R_2 - R_1}{R_1(t_2 - t_1)} \times 10^6$ (ppm/°C) ; t1 : 20°C+5°C-1°C R1 : Resistance at reference temperature R2 : Resistance at test temperature	Refer to "QUICK REFERENCE DATA"
Short time overload (S.T.O.L) **Clause 4.13**	Permanent resistance change after a 5second application of a voltage 2.5 times RCWV or the maximum overload voltage specified in the above list, whichever is less.	ΔR/R max. ±(0.25%+0.05Ω)
Resistance to soldering heat(R.S.H) **Clause 4.18**	Un-mounted chips completely immersed for 10±1second in a SAC solder bath at 260 C ±5°C	no visible damage Δ R/R max. ±(0.25%+0.05Ω)
Solderability **Clause 4.17**	Un-mounted chips completely immersed for 2±0.5 second in a SAC solder bath at 235°C±5℃	good tinning (>95% covered) no visible damage
Temperature cycling **Clause 4.19**	30 minutes at -55°C±3°C, 2~3 minutes at 20°C+5°C-1°C, 30 minutes at +155°C±3°C, 2~3 minutes at 20°C+5°C-1°C, total 5 continuous cycles	no visible damage ΔR/R max. ±(0.25%+0.05Ω)
Load life (endurance) **Clause 4.25**	1000 +48/-0 hours, loaded with RCWV or Vmax in chamber controller 70±2°C, 1.5 hours on and 0.5 hours off	ΔR/R max. ±(1%+0.1Ω)
Load life in Humidity **Clause 4.24**	1000 +48/-0 hours, loaded with RCWV or Vmax in humidity chamber controller at 40°C±2°C and 90~95% relative humidity, 1.5hours on and 0.5 hours off	ΔR/R max. ±(1%+0.1Ω)
Bending strength **Clause 4.33**	Resistors mounted on a 90mm glass epoxy resin PCB(FR4); bending : 3 mm, once for 10 seconds	ΔR/R max. ±(0.25%+0.05Ω)
Adhesion **Clause 4.32**	Pressurizing force: 5N, Test time: 10±1sec.	No remarkable damage or removal of the terminations.
Insulation Resistance **Clause 4.6**	Apply the maximum overload voltage (DC) for 1minute	R≧10GΩ
Dielectric Withstand Voltage **Clause 4.7**	Apply the maximum overload voltage (AC) for 1 minute	No breakdown or flashover

Copyright © by Walsin Technology Corporation. | All rights reserved.

PACKAGING

Paper Tape specifications (unit :mm)

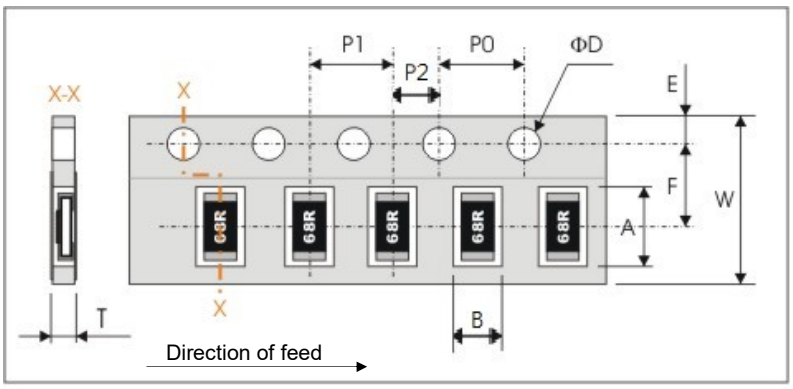

Series No.	A	B	W	F	E
WF10H	3.60±0.20	3.00±0.20	8.00±0.30	3.50±0.20	1.75±0.10
WF12H	3.60±0.20	2.00±0.20	8.00±0.30	3.50±0.2	1.75±0.10
WF08H	2.40±0.20	1.65±0.20	8.00±0.30	3.50±0.2	1.75±0.10
WF06H	1.90±0.20	1.10±0.20	8.00±0.30	3.50±0.2	1.75±0.10
WF04H	1.20±0.10	0.7±0.10	8.00±0.30	3.50±0.05	1.75±0.10

Series No.	P1	P0	P2	ΦD	T
WF10H	4.00±0.10	4.00±0.10	2.00±0.10	$\Phi 1.50^{+0.1}_{-0.0}$	Max. 1.0
WF12H	4.00±0.10	4.00±0.10	2.00±0.10		0.65±0.1
WF08H	4.00±0.10	4.00±0.10	2.00±0.10		0.65±0.1
WF06H	4.00±0.10	4.00±0.10	2.00±0.10		0.65±0.1
WF04H	2.00±0.10	4.00±0.10	2.00±0.10		0.40±0.05

Reel dimensions

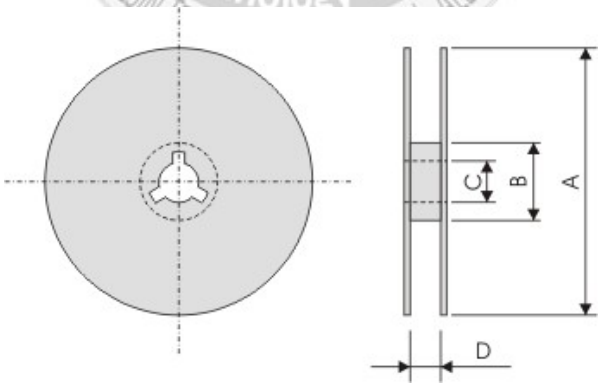

Symbol	A	B	C	D
(unit : mm)	Φ178.0±2.0	Φ60.0±1.0	13.0±0.2	9.0±0.5

Taping quantity

- Chip resistors 5,000 pcs/reel for WF10H, WF12H, WF08H, WF06H.
- Chip resistors 10,000 pcs/reel for WF04H.

Copyright © by Walsin Technology Corporation. | All rights reserved.