PRODUCT ENGINEERING SPECIFICATION
FOR
27” LCD MONITOR
(PROPRIETARY DOCUMENT)

CUSTOMER PRODUCT NAME: PC270522R

DIVA PRODUCT NAME: RGD2761AMII-GW(AG)

DIVA PRODUCT No.: 5A2A27235303201
1A2A27235303200

REV. D

CUSTOMER APPROVAL

APPROVED BY	DATE	NOTES
Jonathan Koeller	25 August 2026	

DIVA APPROVAL

APPROVED BY	PL	RD	PM
	Tony Chiu	Michael Young	Morris Pan
DATE	2026/08/21	2026/08/21	2026/08/21

TABLE OF CONTENTS

1. SCOPE 4
2. SPECIFICATION OVERVIEW 4
2.1 APPEARANCE COLOR AND MATERIAL 5
3. ELECTRICAL DESCRIPTION 5
3.1 SYSTEM BLOCK DIAGRAM 5
3.2 INTERFACE CONNECTOR 6
3.2.1 D-Sub 15pin Connector Pin Assignment 6
3.2.2 HDMI 19pin Connector Pin Assignment 6
3.2.3 Display Port 20pin Connector Pin Assignment 7
3.2.4 Audio Connector Pin Assignment 7
3.2.5 Power 4 Pin Connector Pin Assignment 8
3.3 OPTICAL CHARACTERISTICS 8
4. MECHANICAL DESCRIPTION 9
4.1 FRONT VIEW 9
4.2 REAR VIEW 10
5. USER CONTROL AND INDICATOR 11
5.1 POWER ON/OFF 11
5.2 OSD FUNCTION 11
5.3 CONTROLS 12
5.4 LED INDICATOR 12
6. DISPLAY TIMING 13
7. ACCESSORY 13
8. DRAWING 14
8.1 OUTLINE DRAWING 14
8.2 IO LABEL 14
8.3 MODEL LABEL 15
8.4 CARTON LABEL 16
8.5 CARTON ARTWORK 17
8.6 PACKING LIST 18
8.7 PALLET LOADING 19
9. APPENDIX 20
9.1 CRITICAL/NON-CRITICAL PARTS 20
9.2 WARRANTY 21
9.3 PANEL IIS SPEC 23
9.4 EDID Update 28

REVISION HISTORY

REV.	SHEET	DESCRIPTION	RELEASED BY	DATE
0	All	Initial	Anderson ,Jay ,Daniel , Alicia ,Roy ,Rongchi ,Cara	2022/12/20
1	4.12	P4 2.SPECIFICATION OVERVIEW Update a.POWER UNIT.(MEA-065A24C) P12 7.ACCESSORY Update. a.ADAPTER.(MEA-065A24C)	Daniel	2023/05/31
2	4.5.12	P4 Correct AC input from 100-250Vac to 100-240Vac P5 Correct AC input from 100-250Vac to 100-240Vac P12 Removed display timing of 832x264	Elvis, Daniel, Laslie, Rongchi, Alicia	2023/10/13
3	4.5.20	P4 Corrected panel response time from 20msec (Typ) to 12msec (Typ) Updated driver Board FW version Revised glass Transparency from≧88% to > 88% Corrected Dimension(Unpacked) from 650.61(W) x 441.77(H) x 69.27(T) to 650.61(W) x 401.77(H) x 69.27(T) Corrected weight(unpacked) from 8.6kg to 8.3kg Corrected weight (packed) from 11.4kg to 11.1kg P20 Updated 8.8 PALLET LOADIN to add pallet assembly method	Kim, Elvis,Morris	2024/01/15
A	1.9.11.13.15	P1 Update DIVA Product No to 1A2A27235303200 P9 4.1 FRONT VIEW P11 5.2 OSD FUNCTION P13 6 DISPLAY TIMING P15 8.2 MODEL LABEL	Elvis,Kim, Alicia	2024/03/15
B	15	P15 8.2 Update MODEL LABEL	Killy	2024/06/05
C	9,14,15,16	P9,14 Remove Logo on Cover lens P15,16. Update Label SN P16 Add Made in Taiwan on Carton label	Killy,Joseph	2025/12/31
D	28	Update EDID(DP、HDMI Audio on Ubuntu)	Tony	2026/08/21

1. SCOPE

The intent of this document is to specify the engineering specification which includes: Electrical specification Mechanical Drawing, User OSD control, Display Timing, and Packing accessories for **PRODUCT NAME : PC270522R_27" Color TFT LCD monitor.** Product shall meet RoHS and China RoHS directive.

2. SPECIFICATION OVERVIEW

ITEM		SPEC	UNIT
LCD PANEL	Model	AUO M270HVN02.0	
	Active Area (H:V)	597.6 (H) x 336.15 (V)	mm
	Viewing Angle (Typ.) (H/V)	178/178 (CR=10)	°
	Brightness (Typ.)	300 (Typ.) / 240 (Min.)	cd/m^2
	Contrast Ratio (Typ.)	3000 :1 (Typ.) / 1800 (Min.)	
	Response Time	12 (Typ.)	msec
	Pixel Number	1920 (x3) x 1080	pixel
	Pixel Pitch (H:V)	311.25 x 311.25	um
	Display Color	16.7M colors (8bits RGB)	color
	Backlight Lamp Life	30,000	hour
	Surface Treatment	Anti-Glare 3H	
DRIVER BD	Scaler	RTD2486TD (REALTEK)	
	Input horizontal timing range	30k-85k	Hz
	Input vertical timing range	50-80	Hz
	F/W ver.	PC270529R_231225R0V01	
INPUT SIGNAL	VGA	D-SUB 15Pin x 1	
	HDMI	HDMI 19Pin x 1	
	DP	DP 20pin x 1	
	Audio	Phone Jack 3.5mm x 1	
AUDIO	Speaker	3W x 2	
Glass	Type	AG Coating, Gloss 80±10	unit
	Transparency	>88%	%
POWER UNIT	AC Input	100-240Vac, 1.5-0.75 A, 50-60 Hz	
	DC output	24Vdc, 2.71A	
	External Power Supply	Delta, MEA-065A24C	
MONITOR UNIT	Rating	24Vdc, 1.4 A	
	Power Consumption (Max)	Full Brightness: 35 Power Saving: 3 Off: 3	W
MECHANICAL	Dimension (Unpacked) (W x H x D)	650.61(W) x 401.77(H) x 69.27(T)	mm
	Dimension (Packed) (W x H x D)	747(L) x 237(W) x 541(H)	mm
	Weight (Unpacked)	8.3	kg
	Weight (Packed)	11.1	kg

	Housing Color	DIVA standard White N9	
	Housing Material	PC/ABS	
	VESA Mounting Standard	100x100	Mm
ENVIRONMENTAL CONDITION	Operating Temp.	0 to 40	° C
	Storage Temp.	-20 to 60	° C
	Operating Humidity	30 to 75	% RH
	Storage Humidity	10 to 90	% RH
	Surface	50 max	° C
	MTBF (Parts Stress)	30,000	hour
COMPLIANCE	USA	cTÜVus (ANSI/AAMI ES60601-1 3.2, CAN/CSA C22.2 No. 60601-1 3.2), FCC part 15 subpart B	
	EU	CE,EN 55032/EN55035;IEC/EN 62368-1; IEC/EN60601-1,3.2;EN60601-1-2, 4.1; ROHS,WEEE,	

2.1 APPEARANCE COLOR AND MATERIAL

PART NAME	MATERIAL	COLOR	FINISH
BEZEL	Plastic	N9 White	No Painting
REAR COVER	Plastic	N9 White	No Painting
CABLE COVER	Plastic	Gray-5817	No Painting
STAND	Plastic/Metal	N9 White	No Painting

3. ELECTRICAL DESCRIPTION
3.1 SYSTEM BLOCK DIAGRAM

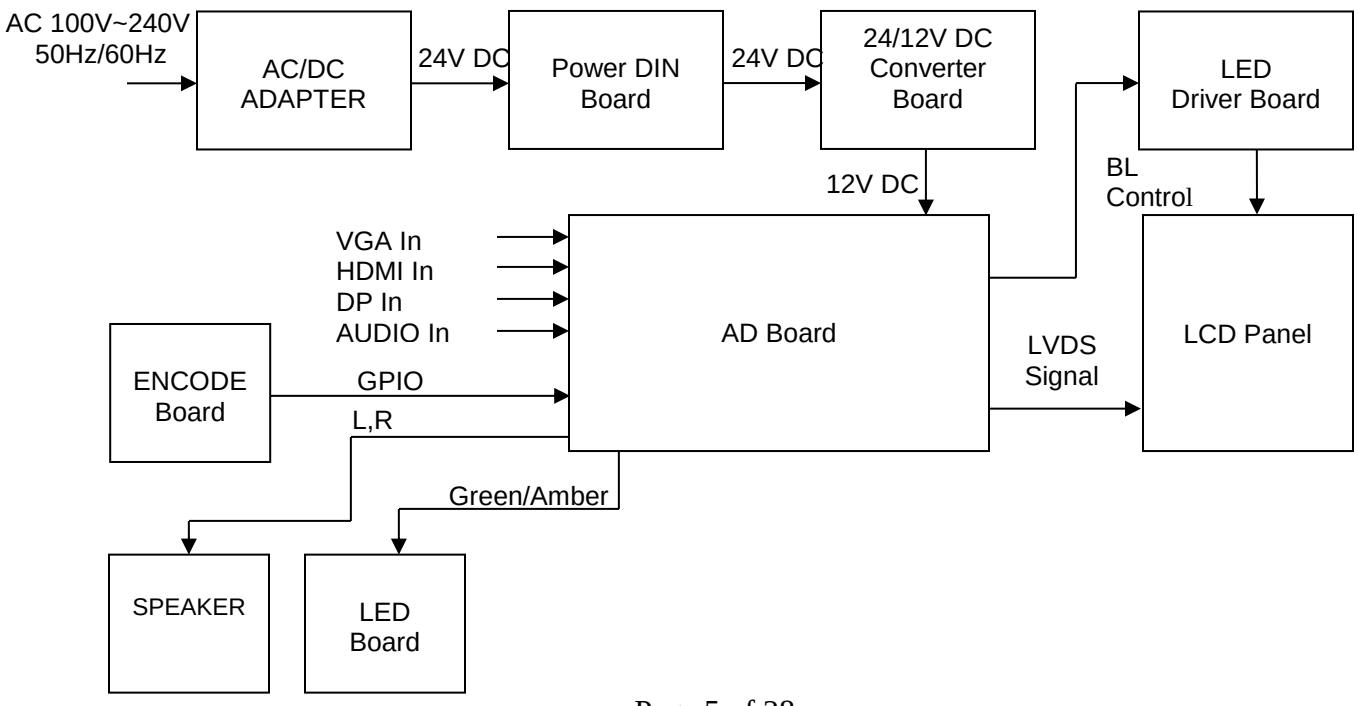

3.2 INTERFACE CONNECTOR

3.2.1 D-Sub 15pin Connector Pin Assignment

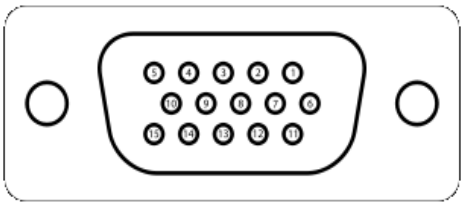

Pin No.	Signal Assignment	Pin No.	Signal Assignment
1	Red video	9	+5V
2	Green video	10	GND
3	Blue video	11	NC
4	NC	12	DDC SDA
5	GND	13	HSYNC
6	Red GND	14	VSYNC
7	Green GND	15	DDC SCL
8	Blue GND		

3.2.2 HDMI 19pin Connector Pin Assignment

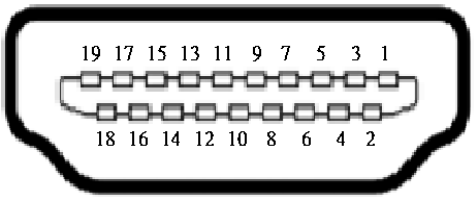

Pin No.	Signal Assignment	Pin No.	Signal Assignment
1	TMDS Data2+	11	TMDS Clock Shield
2	TMDS Data2 Shield	12	TMDS Clock–
3	TMDS Data2–	13	CEC
4	TMDS Data1+	14	Reserved (N.C. on device)
5	TMDS Data1 Shield	15	SCL
6	TMDS Data1–	16	SDA
7	TMDS Data0+	17	DDC/CEC Ground
8	TMDS Data0 Shield	18	+5V Power
9	TMDS Data0–	19	Hot Plug Detect
10	TMDS Clock+		

3.2.3 Display Port 20pin Connector Pin Assignment

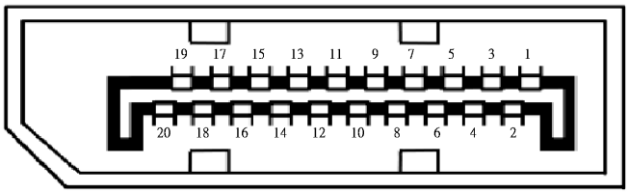

Pin No.	Signal Assignment	Pin No.	Signal Assignment
1	ML_Lane 0 (p)	11	GND
2	GND	12	ML_Lane 3 (n)
3	ML_Lane 0 (n)	13	GND
4	ML_Lane 1 (p)	14	GND
5	GND	15	AUX CH (p)
6	ML_Lane 1 (n)	16	GND
7	ML_Lane 2 (p)	17	AUX CH (n)
8	GND	18	Hot plug
9	ML_Lane 2 (n)	19	Return
10	ML_Lane 3 (p)	20	DP_PWR

3.2.4 Audio Connector Pin Assignment

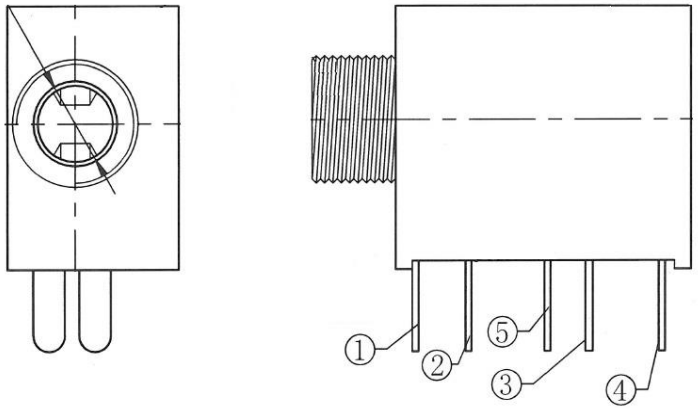

Pin No.	Signal Assignment	Pin No.	Signal Assignment
1	GND	4	GND
2	INL	5	GND
3	INR		

3.2.5 Power 4 Pin Connector Pin Assignment

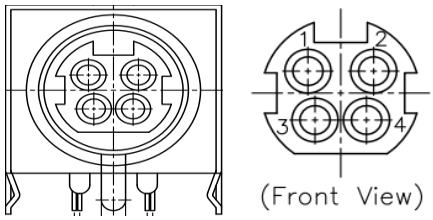

Pin No.	Signal Assignment
1	+24V
2	+24V
3	GND
4	GND

3.3 OPTICAL CHARACTERISTICS

Color Temp	Value					
Cool	x=	0.284	±0.03	y=	0.299	±0.03
Neutral	x=	0.313		y=	0.329	
Warm	x=	0.334		y=	0.343	
User	x=	0.313		y=	0.329	

4. MECHANICAL DESCRIPTION

4.1 FRONT VIEW



4.2 REAR VIEW

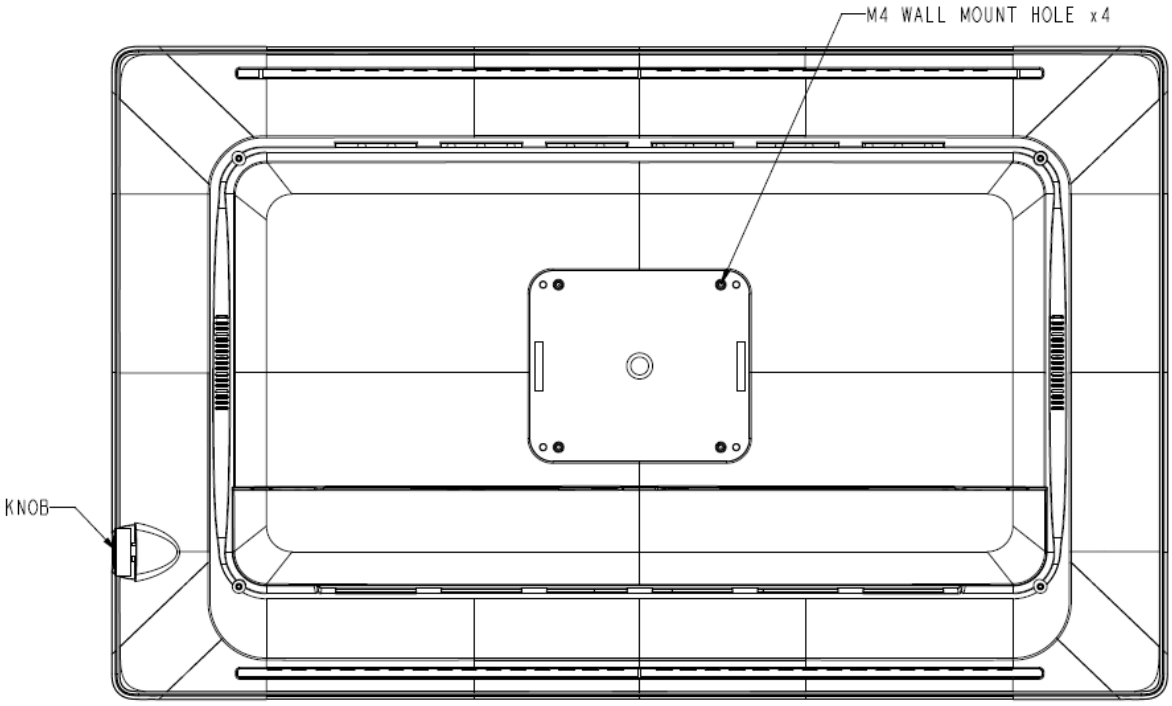

5. USER CONTROL AND INDICATOR

5.1 POWER ON/OFF

The monitor shall have a power control switch (either touchpad, knob or button) visible and accessible on the front or side of the monitor.

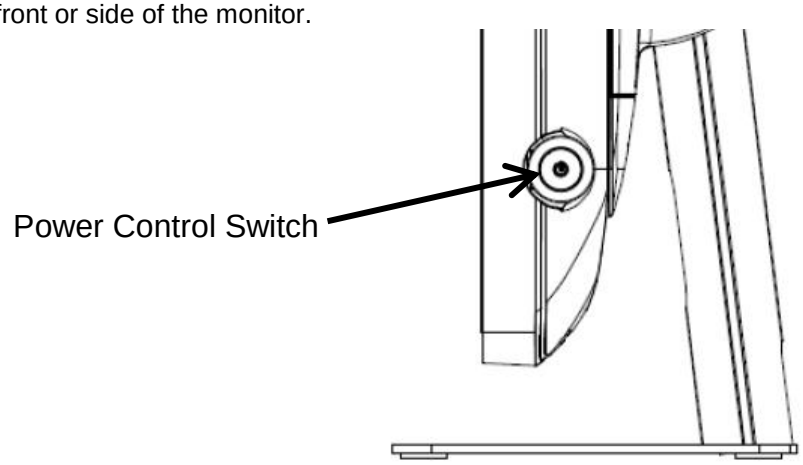

5.2 OSD FUNCTION

An On-Screen Display system shall be used, controlled by a Menu touch key, knob or Menu button.

LEVEL 1	LEVEL 2	LEVEL 3	LEVEL 4	Description
Exit				
Auto Setup (Analog Only)	Exit			
	Yes			
	No			
Brightness				
Contrast				
Display (Analog Only)	Exit			
	H. Position			Move the image left and right on the screen. Default value: 50
	V. Position			Move the image up and down on the screen. Default value: 50
Color Mode	Exit			
	Color Temperature	Exit		Default setting: Neutral Note: Cool=9300K Neutral=6500K Warm=5400K
		Cool		
		Neutral		
		Warm		
		User	Exit	
			Red	
			Green	
			Blue	
	Gamma	Exit		Adjust the Gamma value. Default setting: Gamma 2.2
		Neutral		
		Gamma 2.2		
		DICOM		
Audio	Exit			
	Input	Exit		
		Digital		Default value: Line In

LEVEL 1	LEVEL 2	LEVEL 3	LEVEL 4	Description
		Line In		
	Mute	Exit		
		On		Default value: Off
		Off		
	Volume			Default value: 50
Clock/Phase (Analog Only)	Exit			
	Clock			Adjust the clock of the image.
	Phase			Adjust the phase of the image.
Management	Exit			
	Scaling	Exit		Default setting: Full
		Full		
		5:4		
		4:3		
		16:9		
		1:1		
	OSD Display	Exit		
		OSD H. Position		Default value: 50
		OSD V. Position		Default value: 50
	Language	Exit		
		English		
		French		
		German		
		Italian		
		Spanish		
		Japanese		
	Source	Exit		
		Auto Source	Exit	
			On	Default value: On
			Off	
		VGA		Change to VGA source.
		HDMI		Change to HDMI source.
		DP		Change to DisplayPort source.
	Power Key Lock	Exit		Default setting: Unlocked
		Locked		
		Unlocked		
	Recall	Exit		Factory reset to the default settings.
		Yes		
Operating Hours				

5.3 CONTROLS

Press the Rotary Switch to display OSD Menu.
- When pressed, OSD menu will appear.
- When pressed for 3sec, the power will be turned off and deviate factory mode.
- Rotate the Rotary Switch to adjust and select Main Menu Options ([+],[-]).

5.4 LED INDICATOR

POWER INDICATOR STATUS	OPERATION DESCRIPTION
Green	Operating
Amber	Power saving mode
Off	Power off

6. DISPLAY TIMING

◎: Recommended timing O: Applied timing

Resolution	Pixel-rate [MHz]	Line-rate [kHz]	Frame-rate [Hz]	VGA	HDMI	DP
640x480	25.200	31.500	60.000	O	O	O
640x480	31.500	37.861	72.809	O		
640x480	31.500	37.500	75.000	O		
720x400	28.322	31.469	70.087	O	O	O
800x600	36.000	35.156	56.250	O		
800x600	40.000	37.879	60.317	O	O	O
800x600	50.000	48.077	72.188	O		
800x600	49.500	46.875	75.000	O		
1024x768	65.000	48.363	60.004	O	O	O
1024x768	75.000	56.476	70.069	O		
1024x768	78.750	60.023	75.029	O		
1280x1024	108.000	63.981	60.020	O	O	O
1280x1024	135.000	79.976	75.025	O		
1600x1200	162.000	75.000	60.000	O	O	O
1920x1080	148.504	67.502	60.002	◎	◎	◎
832x624	57.284	49.722	74.550			O

7. ACCESSORY

ACCESSORY NAME	DESCRIPTION	QUANTITY
ADAPTER	ADAPTER (24V/2.71A,MEA-065A24C6-A,DELTA)	1

8. DRAWING

8.1 OUTLINE DRAWING

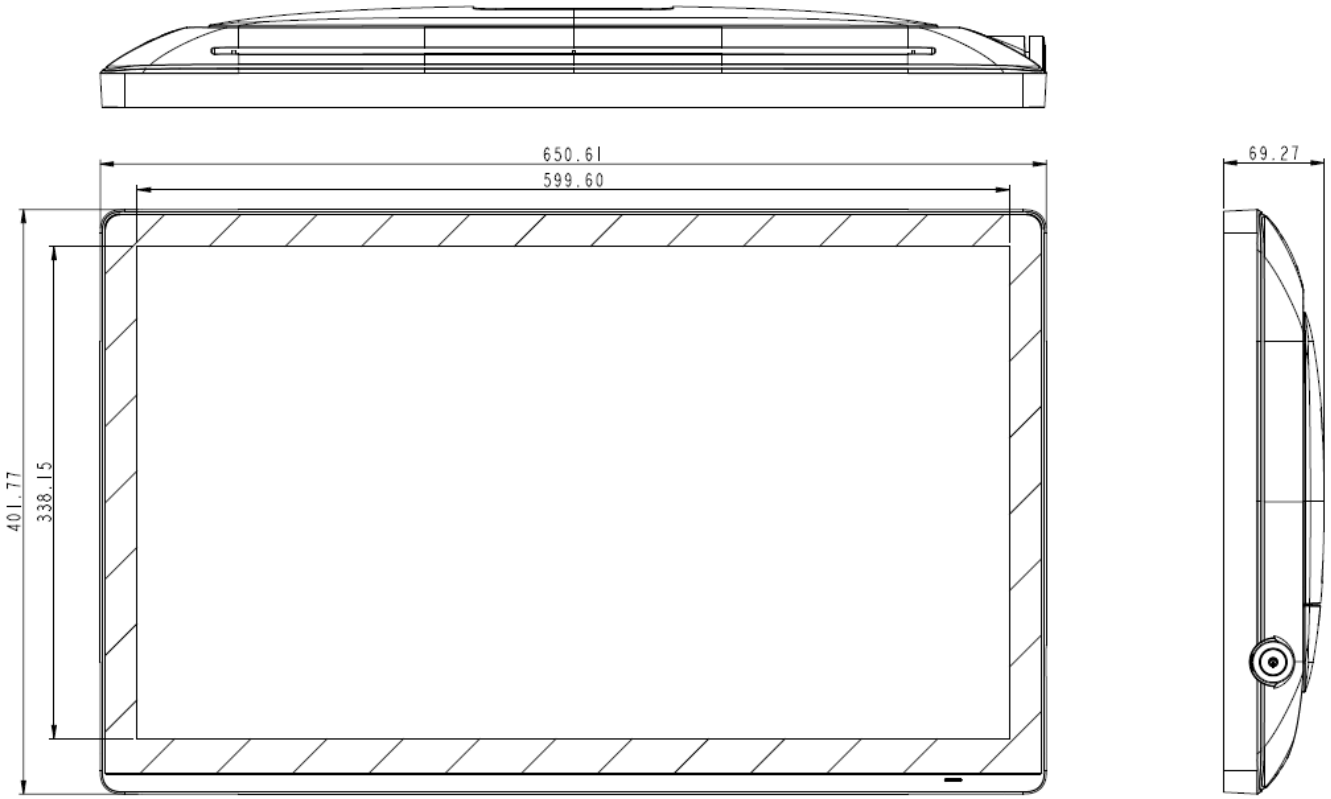

8.2 IO LABEL

3MD364FL110



8.3 MODEL LABEL

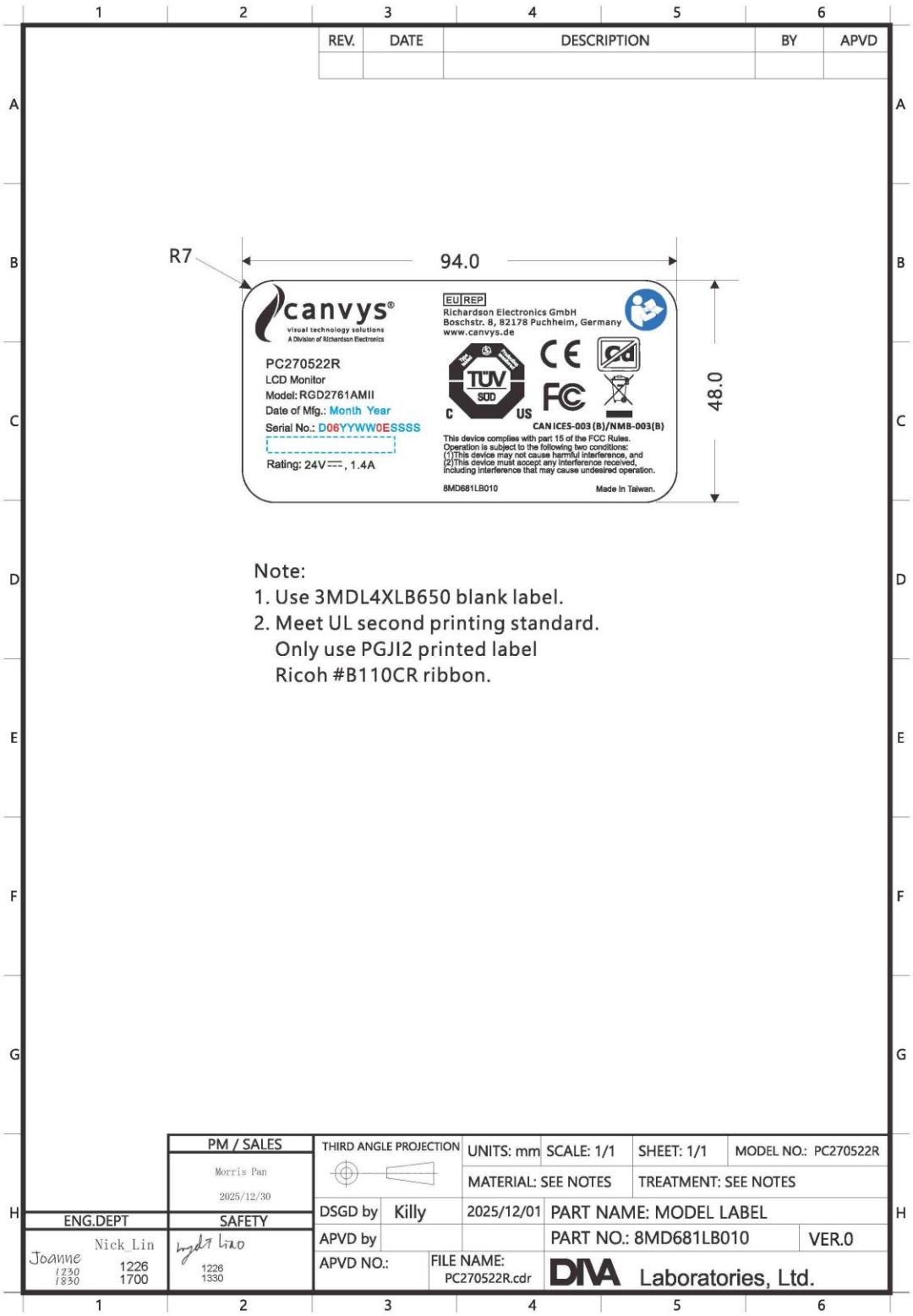

8.4 CARTON LABEL

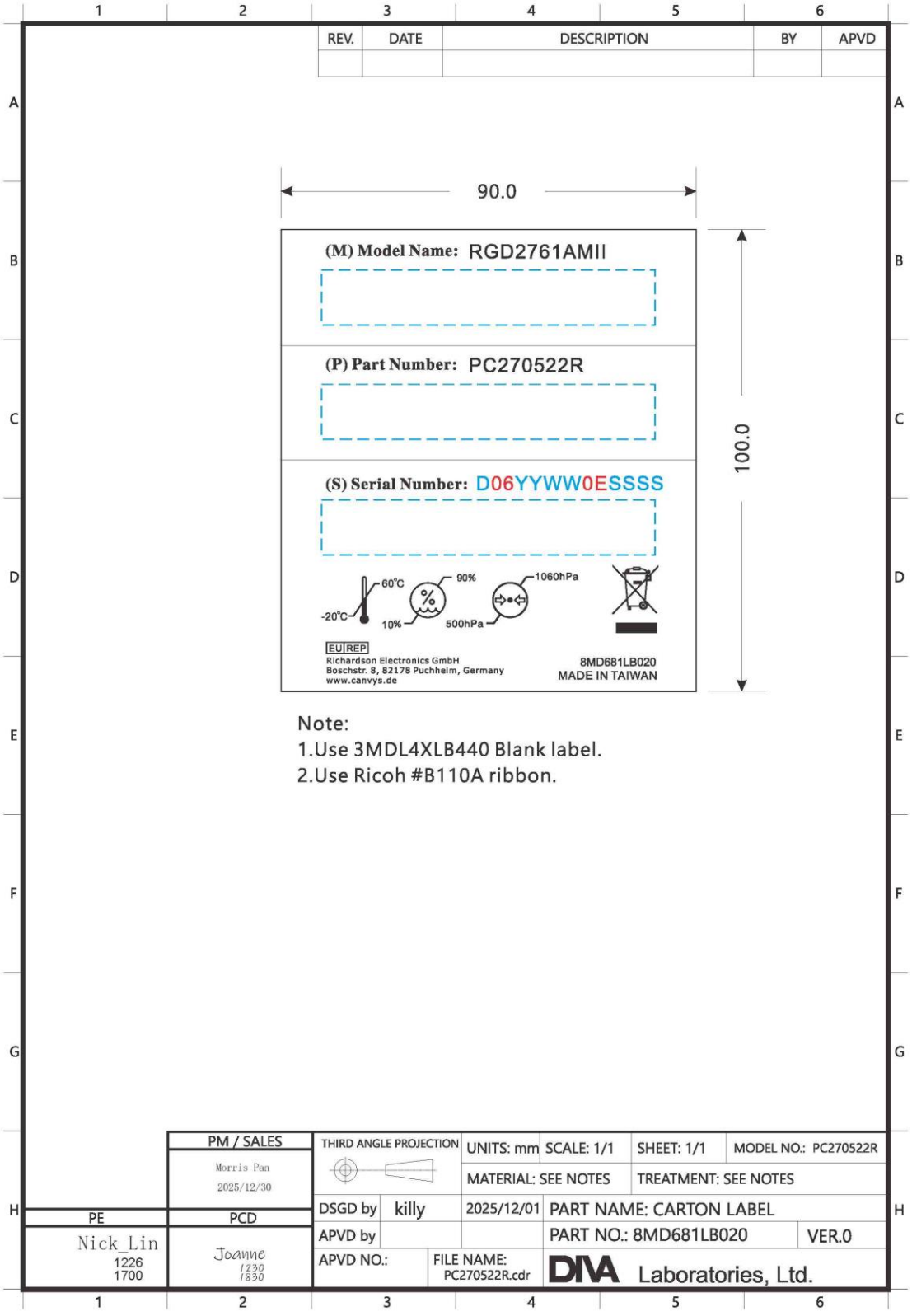

8.5 CARTON ARTWORK

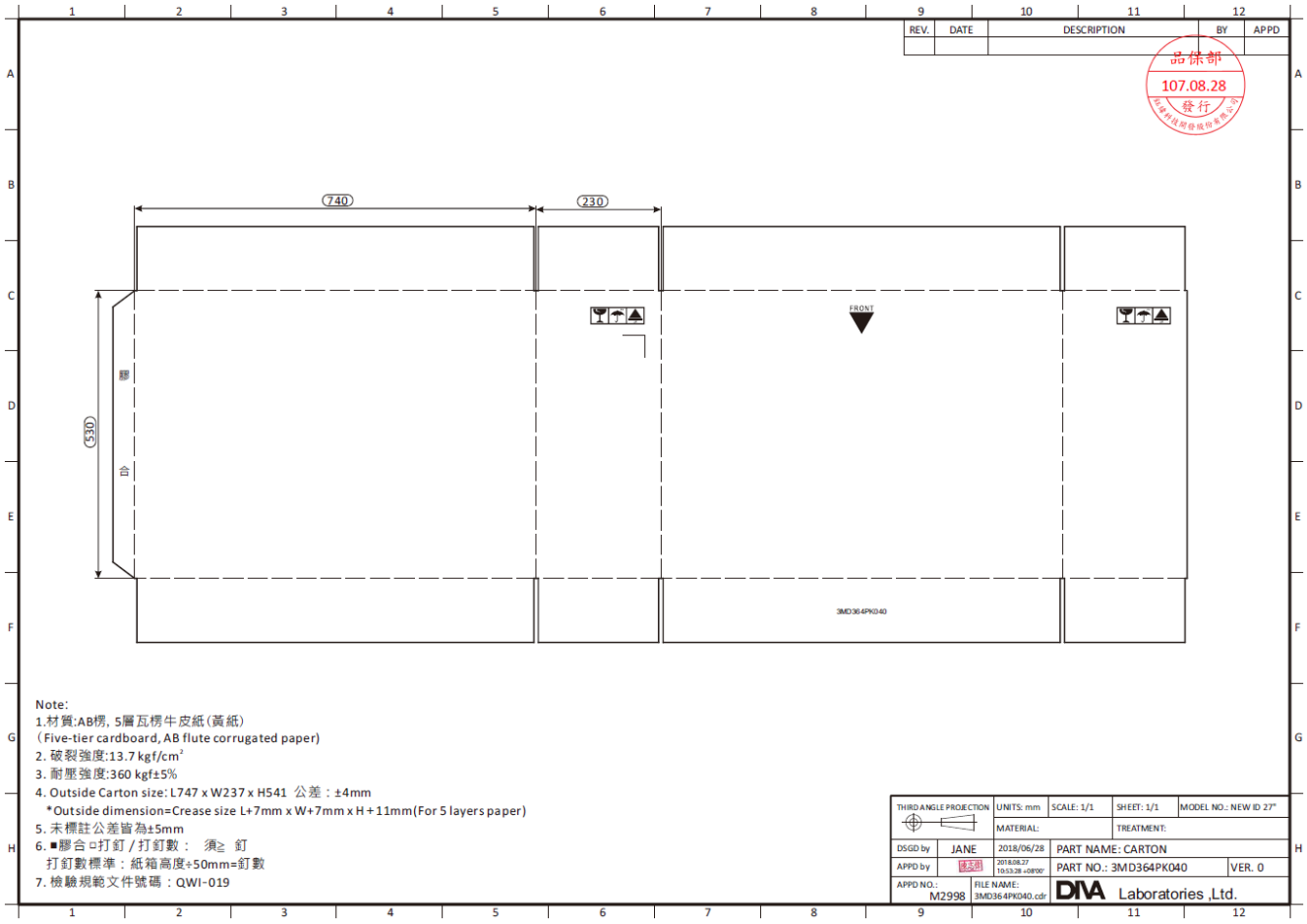

8.6 PACKING LIST

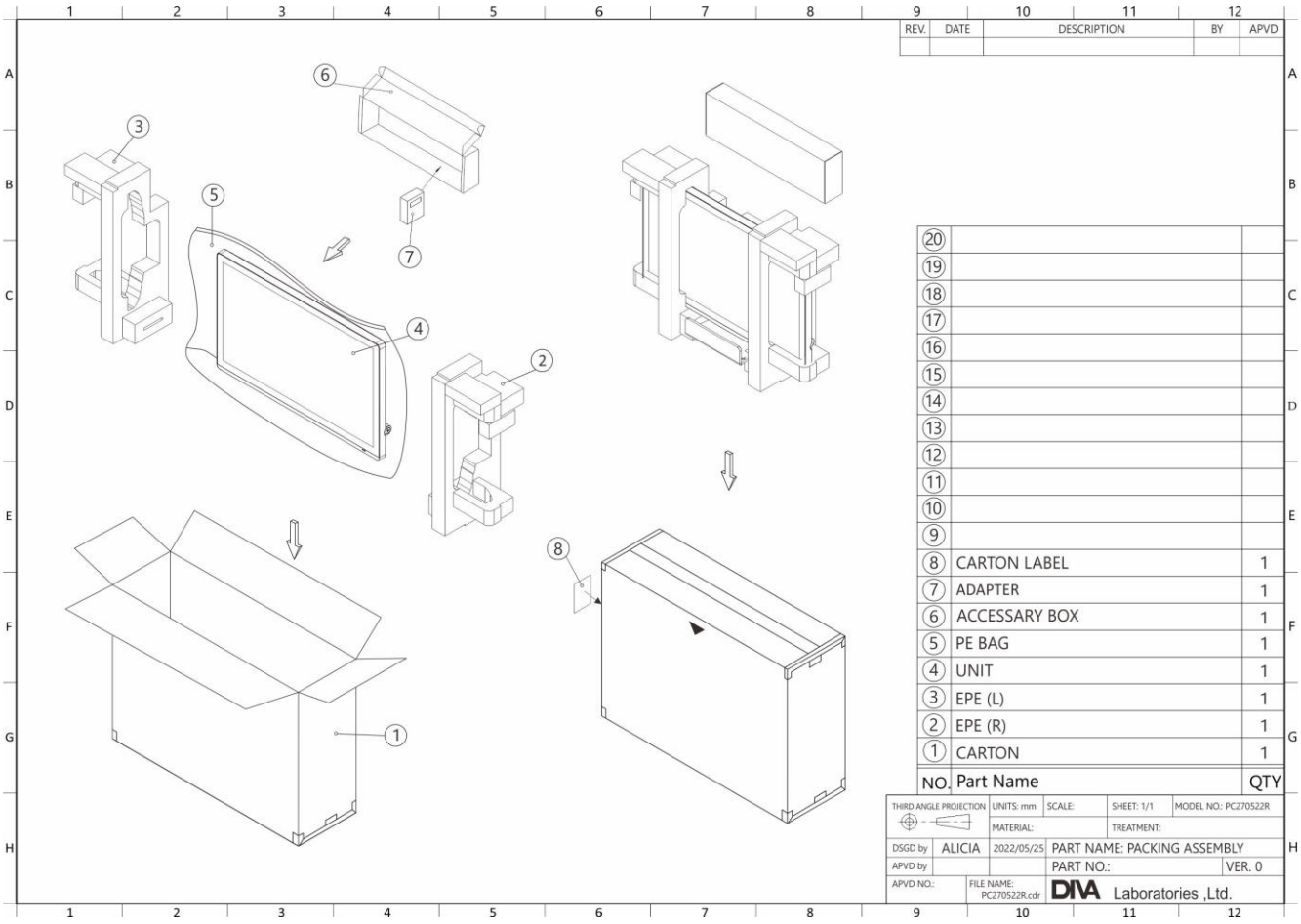

8.7 PALLET LOADING

Pallet Size:	Pallet P/N:	Packege Size:	Packege Weight(set):
L1070*W1100*H120	3N20A7B0B91	L747*W237*H541 mm	11.1 KG
QTY of Product(sets/one pallet):	AIR:10 sets	Hight:120.2 cm	
	SEA:15 sets	Hight:174.3 cm	

Pallet layout:

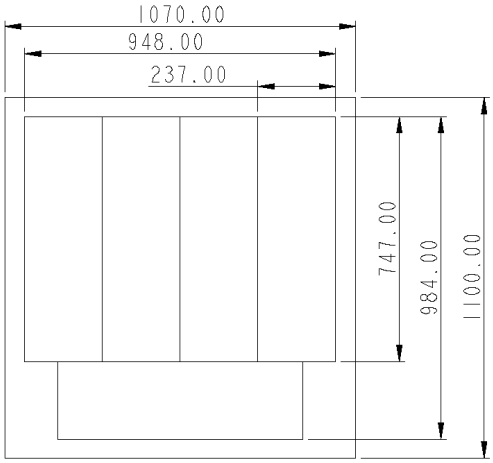

Pallet Assembly Method:

Corner Guard (Q'TY):	V	Top Edge	V	Side Edge
Plastic Straps(H&V):	V	Horizontal	V	Vertical
Stretch Film (Color):	V	Transparent		Black
Pallet (Material):	V	Fiber Paper		Plastic

NOTE: 1. Hieght(H):
AIR, H≤155 cm.
SEA, H≤225 cm.
2. Horizontal edge guard overlaps Vertical edge guard.
(See the Detail "A", 4 corner)
3. Stretch film not shown in the image.

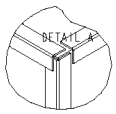

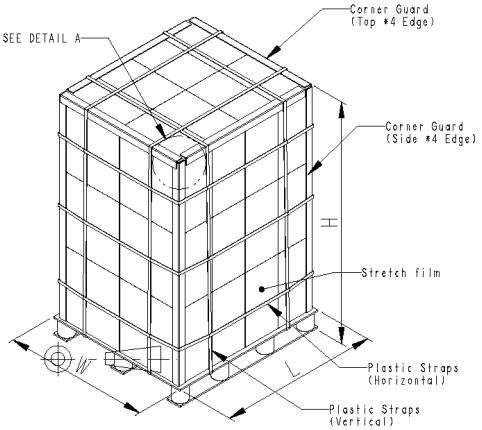

DSGN by	Kim	2024-01-09	MODEL NAME:
FILE NAME:	PALLET_SPEC_A		DIVA Laboratories ,Ltd.

9. APPENDIX
9.1 CRITICAL/NON-CRITICAL PARTS

Critical: Diva notifies customer of impending component change/EOL upon evaluating by Diva engineers. Diva provides available successor solutions and/or options to properly manage the EOL/ECN.

Non-Critical: Component is not affected by product performance and safety certification. ECN notification will be issued. Approval from the customer is not required.

Component	Status
Scalar IC	Critical
Power IC	Critical
Main Driver Board	Critical
Power Supply	Critical
LED Driver Board/ Inverter	Critical
LCD Panel	Critical
Touch Controller	Critical
Touch Sensor	Critical
Firmware	Critical
Stand / Bracket / Accessory	Non-Critical
Cable / Wire	Non-Critical
Subsidiary Mechanic Parts	Non-Critical
Subsidiary Sensor Board	Non-Critical
Subsidiary Interface Board	Non-Critical
Components (Memory, R/L/C, Crystal, Diode, Filter, Connector, Speaker, etc.)	Non-Critical

9.2 WARRANTY

A. Limited Warranty

DIVA Laboratories, Ltd. (“DIVA”) warrants the LCD monitor (the “Product” you have purchased from DIVA or from a DIVA or from an authorized DIVA reseller, to be free from defects in materials and workmanship under normal use for a period of two (2) years. The warranty period begins on the date of purchase. Your original purchase invoice (sales receipt) is your proof of purchase. If you cannot provide the original purchase invoice (sales receipt), the warranty period will be based on the manufacture date-code shown on the Product. A Product that has been exchanged is warranted from the original date of purchase. The burden of proving a warranty entitlement is solely on the customer.

This warranty extends only to the original purchaser; it is not transferable to anyone who subsequently purchases, leases, or otherwise obtains the Product. It excludes expendable parts. During the warranty period, DIVA will repair or replace covered hardware with new or equal to new parts and products. All exchanged parts and Products replaced under this warranty will become the property of DIVA. During the warranty period, there will be no charge for labor or parts. Freight costs to return products to DIVA will be the customer’s responsibility. If DIVA in it’ sole discretion determines that DIVA is unable to repair the Product to good working order, the product may be replaced with an equal product, solely at DIVA’s discretion. Customers must notify DIVA Technical Support, in writing within 30 days of a service incident. If DIVA determines that the product does not meet the warranty entitlements, then DIVA’s sole responsibility will be to offer a billable repair.

The Warranty is valid only in the countries or territories where the Distributors are located.

B. Warranty Limitation; Exclusion; Exclusive Remedies

This Limited Warranty does not extend to any Product that:

a) Is damaged as a result of use other than for its normal intended purpose, failure to use the product in accordance with the User’s Manual, misuse, abuse, or negligence;
b) Is damaged by the use of parts not manufactured or sold by DIVA and its distributors;
c) Is damaged due to any modifications of the product or its original serial number,
d) Is damaged a result of services by anyone other than DIVA or its certified centers.
e) Has Freight damage when returning the Product to DIVA or DIVA’s Service Center;
f) Has deterioration of expendable parts such as the LCD panel and/or backlight (e.g. image retention, burned-in, changes in color, changes in color uniformity, defects in pixels)
g) Is damaged due to unusual physical or electrical stress or interference such as failure or fluctuation of electrical power, lighting, static electricity, fire, floods, or any acts of God.

THIS WARRANTY IS MADE IN LIEU OF ALL OTHER WARRANTIES, RIGHTS OR CONDITIONS, EXPRESSLY OR IMPLIED, STATUTORY OR OTHERWISE, INCLUDING, BUT NOT LIMITED TO, ANY IMPLIED WARRANTY OF MERCHANTABILITY, FITNESS FOR A PARTICULAR PURPOSE AND CIRCUMSTANCES ARISING FOR DEALING, CUSTOM OR THE USAGE OF TRADE. THE BUYER IS RESPONSIBLE FOR DETERMINING IF THE PRODUCT IS SUITABLE FOR A SPECIFIC PURPOSE AND/OR MEETS THE BUYER’S PRODUCTION REQUIREMENTS. DIVA SHALL NOT BE HELD LIABLE FOR ANY DAMAGES, INCIDENTAL OR CONSEQUENTIAL, ARISING FROM OR IN CONNECTION TO THE USE OF THE PRODUCT WHETHER OR NOT IT IS CONSISTENT WITH ANY OTHER STATEMENT MADE IN THE WARRANTY DOCUMENT. THIS LIMITED WARRANTY GIVES THE BUYER SPECIFIC LEGAL RIGHTS. THERE MAY ALSO BE OTHER RIGHTS THAT VARY FROM STATE TO STATE. BUYERS ARE ADVISED TO CONSULT APPLICABLE STATE OR PROVINCIAL LAWS FOR FULL DETERMINATION OF THEIR RIGHTS.

C. DIVA Service Policies

Warranty service is subject to the following terms and conditions. Customers may contact DIVA’s service center or the customer’s dealer or distributor for their respective service entitlement and policies.

1. Service is available for Products purchased and located in the continental United States, Canada, Alaska, Hawaii and Puerto Rico. Shipments to customers cannot be made to PO Boxes. Material returned to the DIVA Service Center may not be sent via USPS.

2. Prior to obtaining warranty service you must contact the Technical Support group. Please have the model number, serial number, and date of purchase, ready when you call. The serial number (S/N) and model number are located on the back of the Product.

3. Products must be out of specification for service. DIVA is the sole judge of whether a product is out of specification.

4. DIVA Technical Support may attempt to help you resolve your problem over the telephone. During problem resolution, you are required to assist DIVA with its performing routine diagnostic procedures. If appropriate, DIVA will then issue you a Return Materials Authorizations (RMA) number to be used as a means of identifying the Product. NO PRODUCT MAY BE RETURNED FOR ANY REASON WITHOUT AN RMA. FAILURE TO DO SO MAY RESULT IN REFUSED SHIPMENTS.

5. Warranty service that cannot be provided via telephone requires you to ship the Product to the designated DIVA Service Center. The Service Center address will be supplied at the time the RMA is issued. You must prepay any shipping charges, export taxes, custom duties and taxes or any other charges associated with transporting the Product. In addition, you are responsible for insuring the Product during shipment. You assume any and all risk of loss during shipment and until delivery of the Product to the designated DIVA Service Center. You must use the original shipping and packing materials and provide a description of the symptoms of the problem. If the original shipping and Packing materials and boxes are not available, you are responsible for ensuring that the Product is properly packaged for shipping. THE RETURN MATERIALS AUTHORIZATION (RMA) NUMBER MUST BE PLACED ON THE EXTERIOR OF THE SHIPPING CONTAINER.

PHYSICAL DAMAGE THAT OCCURRS DURING SHIPMENT IS NOT WARRANTED.

6. THE RAMA EXPIRES 30 DAYS AFTER ITS ISSUANCE. DEFECTIVE PRODUCTS THAT HAVE A RMA MUST BE RETURNED WITHIN THAT TIME.

7. DIVA is not responsible for a Product shipped to the Authorized Service Center. Products that arrive physically or cosmetically damaged or scratched, including but not limited to, scratches on the Product, the panel, or bezel, or damage beyond normal usage, will not be eligible for replacement. In this event, remedial service will be repair and return. PRODUCTS THAT ARRIVE AT THE AUTHORIZED SERVICE CENTER WITH COSMETIC OR PHYSICAL DAMAGE WILL BE ASSESSED A REPAIR CHARGE.

9.3 PANEL IIS SPEC

1 Scope:

1.1 The incoming inspection standards shall be applied to TFT-LCD Modules (hereinafter called "Modules") that supplied by AU Optronics Corporation (hereinafter called "seller").

1.2 Specifications contains

- Electrical inspection specification
- Appearance specification
- Outside dimension specification

2 Incoming inspection:

The buyer (customer) shall inspect the modules within twenty calendar days of the delevery date (the "inspection period") at its own cost. The results of the inspection (acceptance or rejection) shall be recorded in writing, and a copy of this writing will be promptly sent to the seller.

The buyer may, under commercially reasonable reject procedures, reject an entire lot in the delivery involved if, within the inspection period ,such samples of modules within such lot show an unacceptable number of defects in accordance with this incoming inspection standards, provided however that the buyer must notify the seller in writing of any such rejection promptly, and not later than within three business days of the end of the inspection period.

Should the buyer fail to notify the seller within the inspection period, the buyer's right to reject the modules shall be lapsed and the modules shall be deemed to have been accepted by the buyer.

3 Inspection sampling method:

Unless otherwise agree in writing, the method of incoming inspection shall be based on MIL-STD-105E.

3.1 Lot size: Quantity per shipment lot per model.

3.2 Sampling type: Normal inspection, single sampling.

3.3 Sampling level: Level II.

3.4 Acceptable quality level (AQL):

Major defect: AQL=1.0%

Minor defect: AQL=2.5%

4 Inspection instruments:

4.1 Pattern generator: LD-2000 or equivalent model.

4.2 Video board: AUO video board or equivalent. The output of the signal should comply with the specification provided by AUO.

4.3 Luminance colorimeter: Topcon BM-7 or equivalent model

Only for Lisource Use

5 Inspection environment conditions:

5.1 Room temperature : 20 ~ 25℃.
5.2 Humidity: 65±5% RH.
5.3 Illumination: Fluorescent light (Day-Light Type) display surface illumination to be *300 ~ 700 Lux. (standard 500Lux.)*
5.4 To be a distance about 35±5 cm in front of LCD unit, viewing line should be perpendicular to the surface of the module judge the visual appearance with human's eyes *(±30° viewing edge will be allowed).*
5.5 Take off the protector of polarizer while judging the display area.
5.6 If there is any question while judging, check the panel again while operating.

6 Classification of defects:

Defects are classified as major defects and minor defects according to the degree of defectiveness defined herein.

Major defects: A major defect is a defect that is likely to result in failure, or to reduce materially the usability of the product for its intended purpose.
Minor defects: A minor defect either is a defect that is not likely to reduce materially the usability of the product for its intended purpose, or is a departure from an established having little bearing on the effective use or operation of the product.

6.1 Electrical inspection specification

	Inspection Item	Specification	
1	Line / Block defect	Can't be seen.	
2	Bright dots	≦ 2 dots (Note1, 4)	
3	Dark dots	≦ 5 dots	
4	Total dots defect	≦ 5 dots	
5	Adjacent dot defect (Note 1, 2, 3)	Two continuous bright dots (vertical, horizontal, oblique):	NA
		Three or more continuous bright dots (vertical, horizontal, oblique):	NA
		Two continuous dark dots (vertical, horizontal, oblique):	≦ 2 pairs
		Three or more continuous dark dots (vertical, horizontal, oblique):	NA
		Distance between 2 Bright dots:	≧ 15 mm
		Distance between 2 Dark dots:	≧ 15 mm
		Distance between Bright and Dark dot:	≧ 15 mm
6	Display non-uniformity Or Mura (Note 5,6)	Use 2% ND filter or judged by equivalent limit sample	

Note 1: For bright dot defect, bright area should be larger than 1/2 area of a sub-pixel to be count as 1 dot defect. A dot defect that is smaller than the defined dot defect will be treated as small bright dot.

The drawing of 1/2 area sub-pixel definition: The 1/2 area sub-pixel can be defined as below one or more of specific shapes (Fig.1).



Fig.1



Fig.2

Only for customer Use

All bright dot defects should not be noticeable by observer under specified inspection environment (Please refer to item 5).

Note 2: (Fig.2) Adjacent-dot defect (refer to picture, dot 1,2,..,8 around A are all A's adjacent dots) should be inspected under the same display pattern in any one of White /Black /Red /Green /Blue /Monotone Gray pattern.

Note 3: Adjacent-dot defect should be observed under any one of White /Black /Red /Green /Blue pattern. 1 pair of bright dots equals 2 dots. Inspection patterns: Standard inspection patterns of dot defect are listed below. AUO uses these patterns as standard criteria for judging dot defect. Please inform AUO if any other pattern is to be used to examine dot defect.

Test Pattern	Defect
Full Black	For bright dot(s)
Full White	For dark dot(s)
Monotone Red /Green /Blue	For bright and dark dot(s)

Note 4: The judgment criteria of particle occurred bright dot is the same as bright dot judgment criteria.

Note 5: The display uniformity (general mura) symptoms will use 2% ND Filter. That is, the definition of Not Noticeable means the symptom can be covered by 2% ND Filter. Movable mura should be ignored if the mura disappear after lightly patting on the mura area. And the weak line defect can be counted as mura which can be invisible while 2% ND filter applied.

Note 6: The inspection method of ND Filter - holding ND filter in front of the panel around 1 cm and examine the panel from 35±5 cm in the front view for 3 seconds.

Only for Lits Price Use

6.2 Appearance inspection specification

Judge area	Judge item		Inspection specification		Judge criterion	
					Major	Minor
Active Area (Note 4)	Particles, scratch and bubbles in display area (include bright & dark spot, Note 1, 2, 3)	Round	Average diameter (D) :(mm)	Numbers (N)		O
			D < 0.15	Disregarded		
			0.15 ≤ D ≤ 0.5	N ≤ 4		
			0.5 < D	N = 0		
		Linear	Width: W (mm) / Length: L (mm)	Numbers		O
			W< 0.07 and L < 2	Disregarded		
			0.07≤ W≤ 0.1 or 2 ≤ L ≤ 10	N ≤ 4		
			W> 0.1 or L >10	N = 0		
BM area polarizer dent (Note 5)	Dent	Round	D ≤ 2.0	N ≤ 2		O
Bezel	Scratch		No harm			O
	Dirt					O
	Wrap		No dangerous		O	
	Sunken		No harm		O	
Label (S/N, B/L, Week code)	No label		No		O	
	Invert label				O	
	Broken				O	
	Dirt		Word can be read.			O
	Not clear					O
	Word out of shape					O
	Mistake		No			O
	Position		Be attached on right position			O
Solder	Appearance		Can't see the abnormal color, shape, hurt, dirt (fused goods, etc.). If it is necessary, please prepare sample.		O	
Screw	Not enough		No		O	
	Limp		No		O	
Connector	Connection status		Need correct connection.		O	
FPC/FFC	Broken		No		O	

Note 1: When L>=2W, defect count as liner defect.
Note 2: D=1/2(W+L)

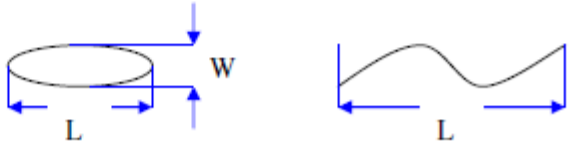

Note 3: To verify the responsbility of following defects was caused by supplier, the IQC checks as requested on above items before mass production such as the Polarizer Scratch, Gap Mura, TFT Glass broken…etc.

Only for Litsource Use

7 Inspection judgement:

7.1 The judgement of the shipped lot (acceptance or rejection) should follow the sampling plan of MIL-STD-105E, single sampling, normal inspection, level II.

7.2 If the number of defects is equal to or less than the applicable acceptance level, the lot shall be accepted.

7.3 If the number of defects is more than the applicable acceptance level, the lot shall be rejected and the buyer should inform the seller of the result of incoming inspection in writing

8 Precaution:

Please pay attention to the following items when you use the LCD Module with back-light unit.

8.1 Do not twist or bend the module and prevent the unsuitable external force for display module during assembly.

8.2 Adopt measures for good heat radiation. Be sure to use the module with in the specified temperature.

8.3 Avoid dust or oil mist during assembly.

8.4 Follow the correct power sequence while operating. Do not apply the invalid signal, otherwise, it will cause improper shut down and damage the module.

8.5 Less EMI: it will be more safety and less noise.

8.6 Please operate module in suitable temperature. The response time & brightness will drift by different temperature.

8.7 Avoid displaying a fixed pattern (exclude the white pattern) for a long period, which may lead to image sticking.

8.8 Be sure to turn off the power when connecting or disconnecting the circuit.

8.9 Polarizer scratches easily, please handle it carefully.

8.10 Display surface never likes dirt or stains.

8.11 A dewdrop may lead to destruction. Please wipe off any moisture before using module.

8.12 Sudden temperature changes cause condensation, and it will cause polarizer damaged.

8.13 High temperature and humidity may degrade performance. Please do not expose the module to the direct sunlight and so on.

8.14 Acetic acid or chlorine compounds are not friends with TFT display module.

8.15 Static electricity will damage the modules; please do not touch the module without any grounded device.

8.16 No parts of the panel should be dismantled without the presence of AU engineer or the product will not be warranted.

8.17 Be careful do not touch the rear side directly because of the backlight high voltage.

8.18 No strong vibration or shock. It will cause module broken.

8.19 Storage the modules in suitable environment with regular packing.

8.20 Be careful of injury from a broken display module. Please avoid the pressure adding to the surface (front or rear side) of modules, because it will cause the display non-uniformity or other function issue.

Original Source Use

9.4 EDID Update

DP EDID(Before)

8x	02	03	11	41	4C	90	14	05	13	04	12	11	16	15	02	03
9x	06	11	2B	A8	A0	60	C0	1C	30	30	20	25	00	56	50	21
Ax	00	00	1A	2C	33	48	A0	70	1A	1E	40	30	20	25	00	56
Bx	50	21	00	00	1A	1A	36	80	A0	70	38	1F	40	30	20	25
Cx	00	56	50	21	00	00	1E	00	00	00	00	00	00	00	00	00
Dx	00	00	00	00	00	00	00	00	00	00	00	00	00	00	00	00
Ex	00	00	00	00	00	00	00	00	00	00	00	00	00	00	00	00
Fx	00	00	00	00	00	00	00	00	00	00	00	00	00	00	00	A8

Function Select: Ext: Data Block:Audio, Video, Vendor, Speaker

DP EDID(After)

8x	02	03	19	71	4C	90	14	05	13	04	12	11	16	15	02	03
9x	06	23	09	07	07	83	08	00	00	11	2B	A8	A0	60	C0	1C
Ax	30	30	20	25	00	56	50	21	00	00	1A	2C	33	48	A0	70
Bx	1A	1E	40	30	20	25	00	56	50	21	00	00	1A	1A	36	80
Cx	A0	70	38	1F	40	30	20	25	00	56	50	21	00	00	1E	00
Dx	00	00	00	00	00	00	00	00	00	00	00	00	00	00	00	00
Ex	00	00	00	00	00	00	00	00	00	00	00	00	00	00	00	00
Fx	00	00	00	00	00	00	00	00	00	00	00	00	00	00	00	AB

Function Select: Ext: Data Block:Audio, Video, Vendor, Speaker

HDMI EDID(Before)

8x	02	03	11	41	47	90	01	04	03	12	13	1F	65	03	0C	00
9x	05	05	00	00	00	00	00	00	00	00	00	00	00	00	00	00
Ax	00	00	00	00	00	00	00	00	00	00	00	00	00	00	00	00
Bx	00	00	00	00	00	00	00	00	00	00	00	00	00	00	00	00
Cx	00	00	00	00	00	00	00	00	00	00	00	00	00	00	00	00
Dx	00	00	00	00	00	00	00	00	00	00	00	00	00	00	00	00
Ex	00	00	00	00	00	00	00	00	00	00	00	00	00	00	00	00
Fx	00	00	00	00	00	00	00	00	00	00	00	00	00	00	00	08

Function Select: Ext: Data Block:Audio, Video, Vendor, Speaker

HDMI EDID(After)

8x	02	03	1A	41	47	90	01	04	03	12	13	1F	23	09	07	07
9x	83	08	00	00	65	03	0C	00	10	00	00	00	00	00	00	00
Ax	00	00	00	00	00	00	00	00	00	00	00	00	00	00	00	00
Bx	00	00	00	00	00	00	00	00	00	00	00	00	00	00	00	00
Cx	00	00	00	00	00	00	00	00	00	00	00	00	00	00	00	00
Dx	00	00	00	00	00	00	00	00	00	00	00	00	00	00	00	00
Ex	00	00	00	00	00	00	00	00	00	00	00	00	00	00	00	00
Fx	00	00	00	00	00	00	00	00	00	00	00	00	00	00	00	34

Function Select: Ext: Data Block:Audio, Video, Vendor, Speaker

Under the Ubuntu OS environment, additional HDMI/DP audio information has been added to the EDID Data Block to improve audio compatibility