



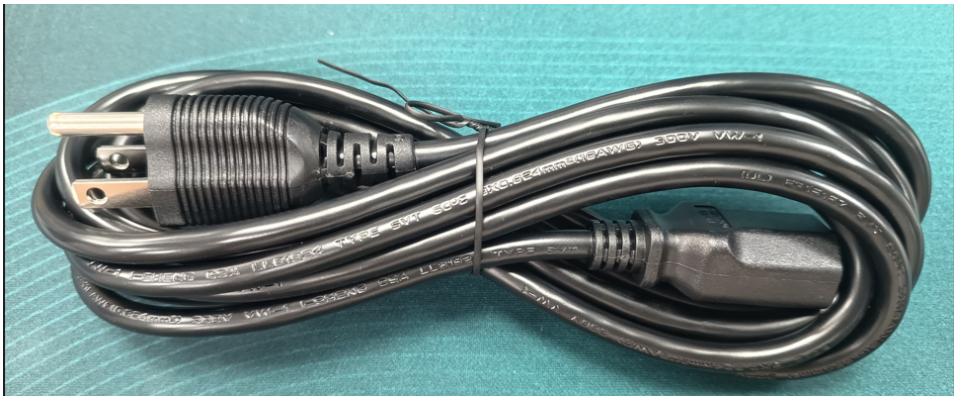









設計驗證工程課
2026 -09- 29
發行

鎰勝工業股份有限公司

I-SHENG ELECTRIC WIRE & CABLE CO., LTD.

APPROVAL SHEET

客戶 CUSTOMER	鈺緯
品名 STYLE NAME	POWER SUPPLY CORD
規格 MODEL NO.	SP-305B+IS-14N 美規 SVT 18AWGX3C 60℃ 凹字 CT-12(BLACK) 3000mm
客戶料號 PART NO.	3KP0000010G (K0128)

鎰勝料號 IS PART NO.	發行日期 ISSUED DATE	版本 VERSION
U4NVS33161230002	2026/7/9	A01

■ 鎰勝工業股份有限公司 I-SHENG ELECTRIC WIRE & CABLE CO., LTD.
台灣省桃園市龜山區大崗里頂湖路 50 號
50, Tin Hwu Road, Ta Gann Village, Gwai San Hsian, Tao Yuan Hsien, Taiwan 33378
TEL:886-3-3282391 FAX:886-3-3284228

■ 鎰勝電子(深圳)有限公司 I-SHENG MANUFACTURING(SONG GANG)FACTORY
廣東省深圳市寶安區松崗街道塘下湧大道旁第一幢
Building 1, TangXiaYong Street, Songgang Town, Bao'An District, Shenzhen, Guangdong, China 518105
TEL:86-755-33876988 FAX:86-755-33876800

■ 鎰勝電子科技(昆山)有限公司 I-SHENG ELECTRONICS (KUNSHAN) CO., LTD.
江蘇省昆山市經濟技術開發區泰山路 888 號
No. 888 Tai Shan Road, Kunshan Development Zone, Kun Shan City, Jiang Su Province, China 215300
TEL:86-512-57386890 FAX:86-512-57386891

■ 鎰勝工業(越南)有限公司 I-SHENG ELECTRIC WIRE & CABLE (VIETNAM)
越南北寧省北寧市雲陽坊桂武工業區
Que Vo I.P, Van Duong ward, Bac Ninh city, Bac Ninh province, Vietnam 0222
TEL: 84-222-3634237 FAX: 84-222-3634436

Approved by	Checked by	Prepared by	Customer Approval
陳永鎮	劉宗科	宋依芃	設計驗證工程課 2026 -09- 29 發行

◎◎◎◎◎ **Please sign back this cover page after your approval** ◎◎◎◎◎

I-SHENG ELECTRIC WIRE & CABLE CO., LTD.

工程變更通知單(ECN)

日期 Date: 2026/7/9		ECN No: 26ECNA69
變更機種(model change): US TYPE	變更原因(change reasons): ☐ 降低成本(cost down) ☐ 製程需要(production process) ☐ 規格變更(spec revised)	☐ 客戶需求 (customer requirement) ■ 安規變更 (Safety change) ☐ 更換材料(material change) ■ 其他(other)：
客戶(Customer) :	變更內容(change content):	
影響料號 (Effected model list):	庫存 (in stock)	

變更原因(change reason)

1. 根據 CSA 最新標準 CSA C22.2 No.21-18 第十版 & CSA C22.2 No.60320-1:19 要求，AC 認證產品需標示 ~ 或 AC
   由於此更新是基於最新標準修訂，不會對安全造成風險，因此沒有強制實施截止日期。截取 CSA 聲明內容如下供參考。完整聲明書請參考附件。
   In accordance with the latest editions of CSA standards—CSA C22.2 No. 21-18 (Tenth Edition) and CSA C22.2 No. 60320-1:19- a marking for AC-certified products, the international symbol “～” or the letters “AC” shall be used.
   As this update is based on the latest standard revisions and caused no risks. No mandatory deadline for implementing the marking change. The following examples are for reference.

2. 我司將於美規 AC 產品標示內容全面增加「～」符號，並以新型號取代舊型號。相關對照如下：
   In alignment with safety requirements for North American AC products, the "～" symbol will be added to the markings, and new models will implemented to replace the existing ones. The model replacement list is as follows**:**
   IS-14N replaces IS-14

3. 針對 IS-14N，我司將一併補上 CSA 標誌，以確保插頭與尾插兩端的標示內容達成一致。
   For IS-14N, the CSA logo will also be added to align the marking specifications between the plug and the connector.

4. 根據加州SB 343法規，包裝若未達法定可回收標準，禁止使用「循環箭頭」標誌，以免誤導消費者。現將PE袋回收標誌變更為「實心三角形」，以符合規範。關於該標誌之印刷顏色，法規並無特定要求。本法規將於2026年10月4日起強制全面執行，為避免罰款及產品退貨可能，須落實此項變更。
   According to California SB 343, packaging that does not meet legal recyclability standards is prohibited from using the "chasing arrows" symbol to avoid misleading consumers. The recycling symbol for PE bags must be transitioned to a "solid equilateral triangle" to comply

with the regulations. There are no specific requirements regarding printing colors.
本法規將於2026年10月4日起強制全面執行，為避免罰款及產品退貨可能，須落實此項變更。
As full enforcement begins on October 4, 2026, this change must be implemented to avoid potential fines and product recalls.

變更前(Before change)	變更後(After change)
SP-305B 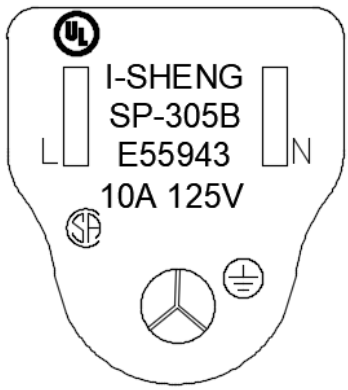	SP-305B 加 ~ 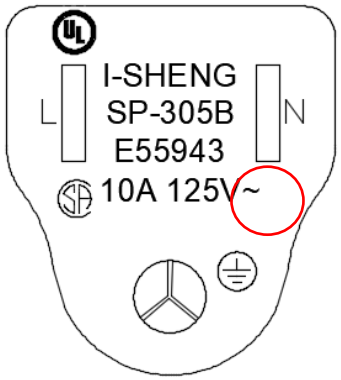
IS-14 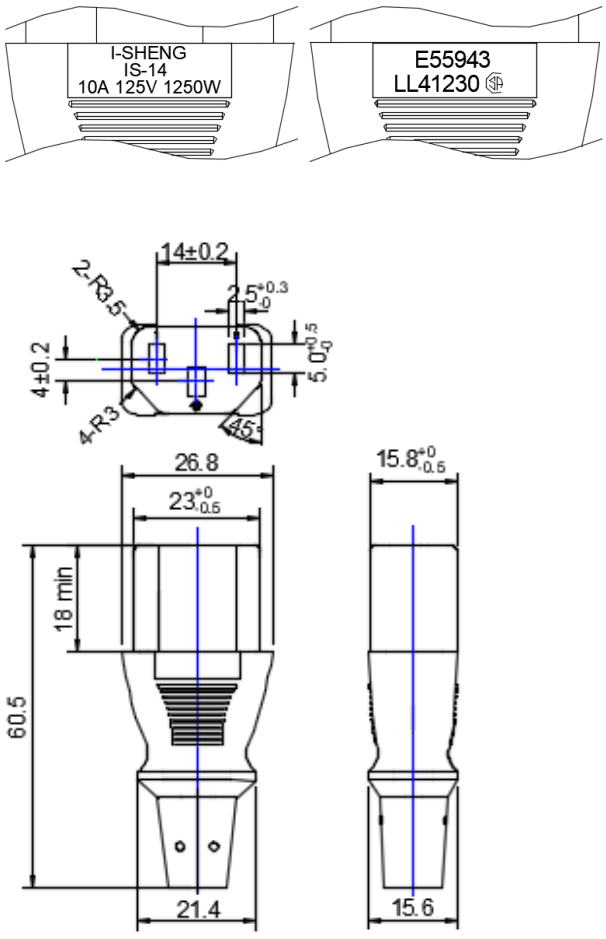	IS-14N 加 ~ & CSA logo 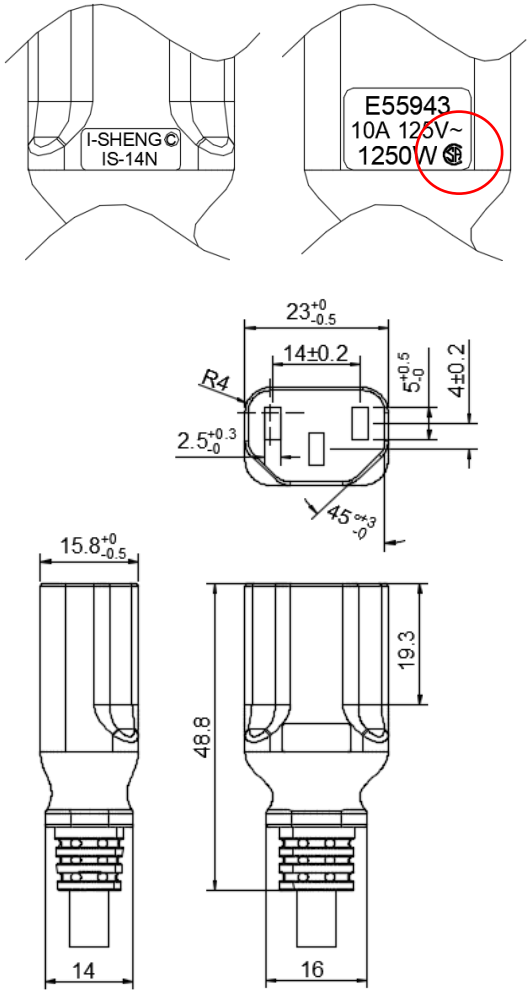

SP-30H 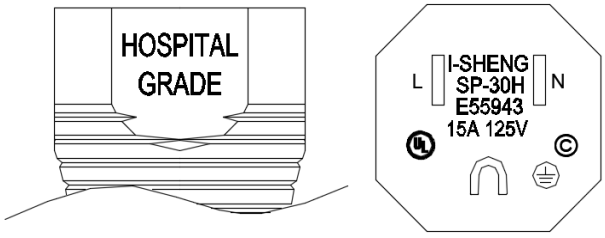	SP-30H 加 ~ 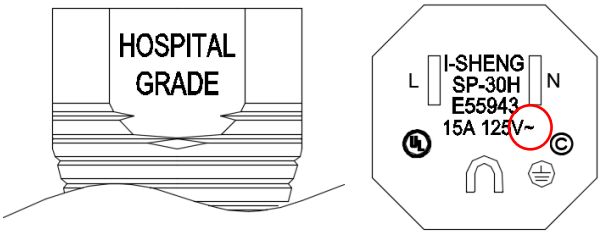
IS-14 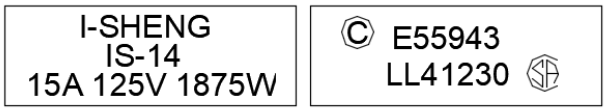	IS-14 加 ~ 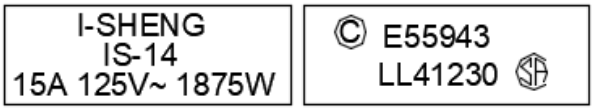
IS-14N 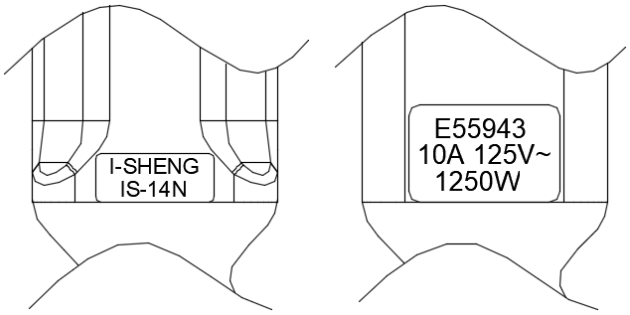	IS-14N 加 CSA logo 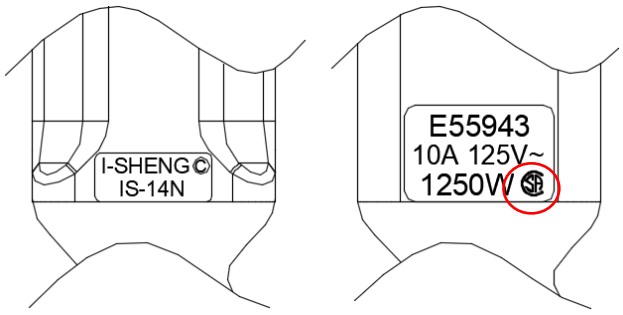
PE bag with chasing arrows symbol 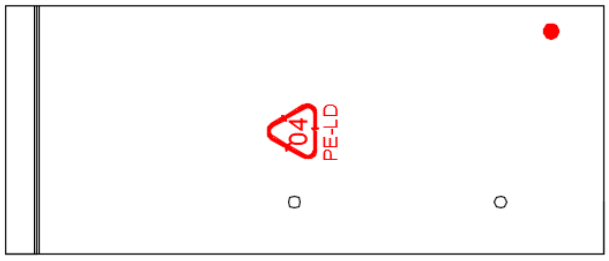	PE bag with solid equilateral triangle 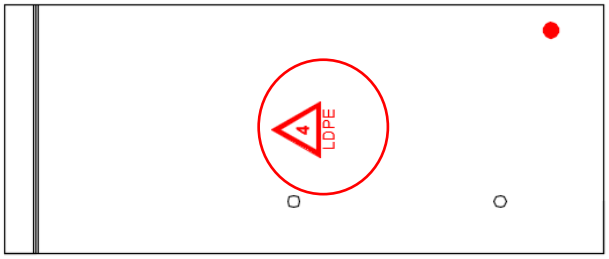
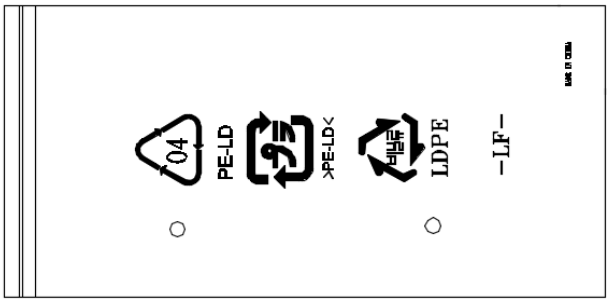	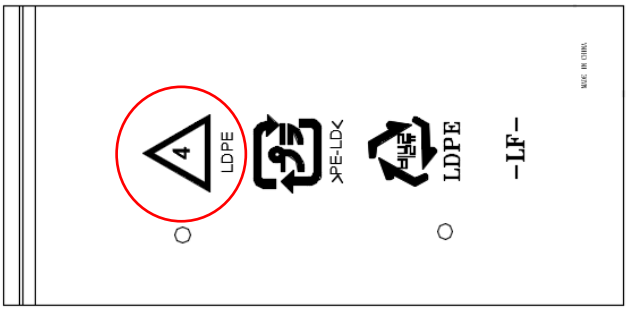
預定實施日期(Effectuated date)：	客戶確認(Customer approval)
After customer approval	

Approved by	Checked by	Prepared by
Tsen Chen	TK Liu	Apple Sung

FORM:I109b

:

AC/ DC Marking Requirement Update

Date Aug, 01, 2025

In accordance with the latest editions of CSA standards—CSA C22.2 No. 21-18 (Tenth Edition) and CSA C22.2 No. 60320-1:19—a marking requirement has been introduced for specific types of cord sets and power-supply cords.

Cord sets or power-supply cords that are certified exclusively for either alternating current (AC) or direct current (DC) must now bear a clearly visible marking indicating the type of electrical rating. The following symbols or letter designations shall be used:

- For AC-certified products: the international symbol “ ~ ” or the letters “ AC ”
- For DC-certified products: the international symbol “ ⎓ ” or the letters “ DC ”

As this update is based on the latest standard revisions and does not pose an immediate risk of injury or damage, there is no mandatory deadline for implementing the marking change. However, during routine factory inspections, inspectors will remind and request that manufacturers initiate a running change to comply with the updated marking requirements.

We kindly urge all relevant parties to arrange for the marking update at the earliest opportunity to ensure continued compliance with applicable standards.

:

交流電 / 直流電標示要求更新

日期：2025 年 9 月 1 日

依據 CSA 標準最新版本——CSA C22.2 No. 21-18（第十版）及 CSA C22.2 No. 60320-1:19——現針對特定類型之電源線組與電源供應線，新增交流電 / 直流電標示要求。

凡**僅**獲交流電（AC）或直流電（DC）認證之電源線組或電源供應線，須於產品上清楚標示其電氣額定類型。標示方式如下：

- 交流電（AC）產品：使用國際符號“~”或字母“AC”
- 直流電（DC）產品：使用國際符號“⎓”或字母“DC”

此更新係依據標準修訂內容所制定，並不構成產品立即性的使用風險與傷害，因此無強制實施期限。惟在例行工廠檢查期間，檢查人員將提醒並要求製造商進行逐步更新（running change），直到舊有庫存消耗完畢，以符合最新標示規範。

敬請各相關單位儘早安排標示更新作業，以確保持續符合 CSA 標準，並配合後續檢查流程順利進行。

如有任何疑問，歡迎與我們聯繫。感謝您一直以來的信任與支持，我們會持續全心為您服務，祝您業務順利，認證合規。

SB-343 Environmental advertising: recycling symbol: recyclability: products and packaging. (2021-2022)

SHARE THIS:

Date Published: 10/06/2021 09:00 PM

Senate Bill No. 343

CHAPTER 507

An act to amend Sections 17580 and 17580.5 of the Business and Professions Code, and to amend Sections 18015 and 42355.5 of, and to add Section 42355.51 to, the Public Resources Code, relating to environmental advertising.

[Approved by Governor October 05, 2021. Filed with Secretary of State October 05, 2021.]

LEGISLATIVE COUNSEL'S DIGEST

SB 343, Allen. Environmental advertising: recycling symbol: recyclability: products and packaging.

(1) Existing law declares that it is the public policy of the state that environmental marketing claims, whether explicit or implied, should be substantiated by competent and reliable evidence to prevent deceiving or misleading consumers about the environmental impact of plastic products and that, for consumers to have accurate and useful information about the environmental impact of plastic products, environmental marketing claims should adhere to uniform and recognized standards.

This bill would further declare that it is the public policy of the state that claims related to the recyclability of a product or packaging be truthful and that consumers deserve accurate and useful information related to how to properly handle the end of life of a product or packaging.

This bill would require the Department of Resources Recycling and Recovery, on or before January 1, 2024, in order to provide information to the public to evaluate whether a product or packaging is recyclable in the state and is of a material type and form that routinely become feedstock used in the production of new products and packaging, to update specified regulations to require disposal facility operators, among other operations and facilities, to provide information to the department regarding how material collected or processed by the operations and facilities was collected and what material types and forms are actively recovered, and not considered contaminants, by the operation or facility. The bill would require the department to conduct, publish on its internet website, and update as provided, a characterization study of material types and forms that are collected, sorted, sold, or transferred by solid waste facilities identified by the department for inclusion in the study. The bill would provide that, except as specified, a product or packaging is considered recyclable in the state if, based on the information published by the department, the product or packaging is of a material type and form collected for recycling by recycling programs for jurisdictions that collectively encompass at least 60% of the population of the state, among other statewide recyclability criteria.

(2) Under existing law, it is unlawful for any person to make any untruthful, deceptive, or misleading environmental marketing claim, whether explicit or implied. A violation of this requirement is a misdemeanor.

This bill would prohibit a person from offering for sale, selling, distributing, or importing into the state any product or packaging for which a deceptive or misleading claim about the recyclability of the product or packaging is made. The bill would provide that, except as specified, a product or packaging that displays a chasing arrows symbol, among other symbols, statements, or directions, is deemed to be a deceptive or misleading claim unless the product or packaging is considered recyclable pursuant to statewide recyclability

criteria and is of a material type and form that routinely becomes feedstock used in the production of new products or packaging, as provided. The bill would therefore expand the scope of an existing crime and impose a state-mandated local program.

(3) Under existing law, a person who represents in advertising or on the label or container of a consumer good that the consumer good that it manufactures or distributes is not harmful to, or is beneficial to, the natural environment, through the use of environmental terms, is required to maintain in its records specified information and documentation supporting the validity of the representation, including, if applicable, whether the consumer good conforms with the uniform standards contained in the Federal Trade Commission Guidelines for Environmental Marketing Claims for the use of the term "recyclable," among other terms. A violation of this requirement is a misdemeanor.

This bill would apply that recordkeeping requirement to a person who makes those representations through the use of a chasing arrows symbol, as defined, or by otherwise directing a consumer to recycle a consumer good. The bill would add to the required information and documentation for the use of the term "recyclable," the use of a chasing arrows symbol, or other representation that advises consumers to recycle a consumer good, whether the consumer good meets the criteria for statewide recyclability. The bill would provide that a direction to a consumer that accurately instructs the consumer to properly dispose of or otherwise properly handle a consumer good at the end of its useful life shall not be considered "otherwise directing a consumer to recycle a consumer good" if the consumer good is subject to one of several enumerated programs. The bill would provide that directing a consumer to compost or properly dispose of a consumer good through an organics recycling program is also not considered "otherwise directing a consumer to recycle a consumer good." A violation of these provisions would be a misdemeanor. The bill would therefore create a new crime and impose a state-mandated local program.

(4) Existing law requires all rigid plastic bottles and rigid plastic containers sold in the state to be labeled with a code that indicates the resin used to produce the bottles or containers, with specified numbers and letters placed in relation to a triangle.

This bill would prohibit the resin identification code from being placed inside a chasing arrows symbol, unless the rigid plastic bottle or rigid plastic container meets the requirements for statewide recyclability.

(5) The California Constitution requires the state to reimburse local agencies and school districts for certain costs mandated by the state. Statutory provisions establish procedures for making that reimbursement.

This bill would provide that no reimbursement is required by this act for a specified reason.

Vote: majority Appropriation: no Fiscal Committee: yes Local Program: yes

THE PEOPLE OF THE STATE OF CALIFORNIA DO ENACT AS FOLLOWS:

SECTION 1. Section 17580 of the Business and Professions Code is amended to read:

17580. (a) A person who represents in advertising or on the label or container of a consumer good that the consumer good that it manufactures or distributes is not harmful to, or is beneficial to, the natural environment, through the use of such terms as "environmental choice," "ecologically friendly," "earth friendly," "environmentally friendly," "ecologically sound," "environmentally sound," "environmentally safe," "ecologically safe," "environmentally lite," "green product," or any other like term, or through the use of a chasing arrows symbol or by otherwise directing a consumer to recycle the consumer good, shall maintain in written form in its records all of the following information and documentation supporting the validity of the representation:

(1) The reasons the person believes the representation to be true.

(2) Any significant adverse environmental impacts directly associated with the production, distribution, use, and disposal of the consumer good.

(3) Any measures that are taken by the person to reduce the environmental impacts directly associated with the production, distribution, and disposal of the consumer good.

(4) Violations of any federal, state, or local permits directly associated with the production or distribution of the consumer good.

(5) Whether, if applicable, the consumer good conforms with the uniform standards contained in the Federal Trade Commission Guidelines for Environmental Marketing Claims for the use of the terms "recycled," "recyclable," "biodegradable," "photodegradable," or "ozone friendly."

(6) If the person uses the term "recyclable," uses a chasing arrows symbol, or otherwise directs a consumer to recycle the consumer good, whether the consumer good meets all of the criteria for statewide recyclability pursuant to subdivision (d) of Section 42355.51 of the Public Resources Code.

(b) Information and documentation maintained pursuant to this section shall be furnished to any member of the public upon request.

(c) For purposes of this section, a wholesaler or retailer who does not initiate a representation by advertising or by placing the representation on a package shall not be deemed to have made the representation.

(d) It is the intent of the Legislature that the information and documentation supporting the validity of the representation maintained under this section shall be fully disclosed to the public, within the limits of all applicable laws.

(e) For purposes of this section, displaying a chasing arrows symbol or otherwise directing a consumer to recycle a consumer good shall not be considered misleading pursuant to Section 17580.5 or Section 42355.51 of the Public Resources Code if either of the following apply:

(1) The consumer good is required by any federal or California law or regulation to display a chasing arrows symbol, including, but not limited to, Section 103(b)(1) of the federal Mercury-Containing and Rechargeable Battery Management Act (42 U.S.C. Sec. 14322(b)(1)) and Section 25215.65 of the Health and Safety Code.

(2) The consumer good is a beverage container subject to the California Beverage Container Recycling and Litter Reduction Act (Division 12.1 (commencing with Section 14500) of the Public Resources Code).

(f) For purposes of this section, "chasing arrows symbol" means an equilateral triangle, formed by three arrows curved at their midpoints, depicting a clockwise path, with a short gap separating the apex of each arrow from the base of the adjacent arrow. "Chasing arrows symbol" also includes variants of that symbol that are likely to be interpreted by a consumer as an implication of recyclability, including, but not limited to, one or more arrows arranged in a circular pattern or around a globe.

(g) For purposes of this section, a direction to a consumer to properly dispose of or otherwise properly handle a consumer good at the end of its useful life shall not be considered "otherwise directing a consumer to recycle a consumer good" pursuant to subdivision (a) if both of the following requirements are met:

(1) The consumer good is subject to any of the following programs:

(A) Chapter 20 (commencing with Section 42970) of Part 3 of Division 30 of the Public Resources Code relating to product stewardship for carpets.

(B) The Used Mattress Recovery and Recycling Act (Chapter 21 (commencing with Section 42985) of Part 3 of Division 30 of the Public Resources Code).

(C) The California Tire Recycling Act (Chapter 17 (commencing with Section 42860) of Part 3 of Division 30 of the Public Resources Code).

(D) The Electronic Waste Recycling Act of 2003 (Chapter 8.5 (commencing with Section 42460) of Part 3 of Division 30 of the Public Resources Code).

(E) Article 10.3 (commencing with Section 25214.9) of Chapter 6.5 of Division 20 of the Health and Safety Code relating to electronic waste.

(F) The Rechargeable Battery Recycling Act of 2006 (Chapter 8.4 (commencing with Section 42451) of Part 3 of Division 30 of the Public Resources Code).

(G) The Cell Phone Recycling Act of 2004 (Chapter 8.6 (commencing with Section 42490) of Part 3 of Division 30 of the Public Resources Code).

(H) The architectural paint recovery program established pursuant to Chapter 5 (commencing with Section 48700) of Part 7 of Division 30 of the Public Resources Code.

(I) The Mercury Thermostat Collection Act of 2008 (Article 10.2.2 (commencing with Section 25214.8.10) of Chapter 6.5 of Division 20 of the Health and Safety Code).

(J) The Lead-Acid Battery Recycling Act of 2016 (Article 10.5 (commencing with Section 25215) of Chapter 6.5 of Division 20 of the Health and Safety Code).

(2) The direction to the consumer accurately instructs the consumer to dispose of the consumer good through participation in, and consistent with, one of the programs identified in paragraph (1) as that program applies to the consumer good.

(h) For purposes of this section, directing a consumer to compost or properly dispose of a consumer good through an organics recycling program shall not be considered "otherwise directing a consumer to recycle a consumer good" pursuant to subdivision (a).

SEC. 2. Section 17580.5 of the Business and Professions Code is amended to read:

17580.5. (a) It is unlawful for a person to make an untruthful, deceptive, or misleading environmental marketing claim, whether explicit or implied. For the purpose of this section, "environmental marketing claim" shall include any claim contained in the "Guides for the Use of Environmental Marketing Claims" published by the Federal Trade Commission.

(b) (1) It shall be a defense to any suit or complaint brought under this section that the person's environmental marketing claims conform to the standards or are consistent with the examples contained in the "Guides for the Use of Environmental Marketing Claims" published by the Federal Trade Commission.

(2) Paragraph (1) does not apply to either of the following:

(A) Claims for violations of subdivision (d) of Section 18015 of the Public Resources Code.

(B) Claims for violations of paragraph (1) of subdivision (b) of Section 42355.51 of the Public Resources Code.

SEC. 3. Section 18015 of the Public Resources Code is amended to read:

18015. (a) All rigid plastic bottles and rigid plastic containers sold in the state shall be labeled with a code that indicates the resin used to produce the rigid plastic bottle or rigid plastic container. Rigid plastic bottles or rigid plastic containers with labels and basecups of a different material shall be coded by their basic material. The code shall consist of a number placed inside a triangle, and letters placed below the triangle. The numbers and letters used shall be as follows:

1 = PETE (polyethylene terephthalate)

2 = HDPE (high density polyethylene)

3 = V (vinyl)

4 = LDPE (low density polyethylene)

5 = PP (polypropylene)

6 = PS (polystyrene)

7 = OTHER (includes multilayer)

(b) A "7" shall appear below the resin abbreviation when the bottle or container is composed of more than one layer of that resin.

(c) The Division of Recycling in the Department of Resources Recycling and Recovery shall maintain a list of abbreviations used on labels pursuant to subdivision (a) and shall provide a copy of that list to a person upon request.

(d) The resin identification code required pursuant to subdivision (a) shall not be placed inside a chasing arrows symbol, as defined in subdivision (f) of Section 17580 of the Business and Professions Code, unless the rigid plastic bottle or rigid plastic container meets the statewide recyclability criteria provided in subdivision (d) of Section 42355.51.

SEC. 4. Section 42355.5 of the Public Resources Code is amended to read:

42355.5. (a) The Legislature finds and declares that it is the public policy of the state that environmental marketing claims, whether explicit or implied, should be substantiated by competent and reliable evidence to prevent deceiving or misleading consumers about the environmental impact of plastic products. For consumers to have accurate and useful information about the environmental impact of plastic products, environmental marketing claims should adhere to uniform and recognized standards, including those standard specifications established by the American Society for Testing and Materials.

(b) The Legislature further finds and declares that it is the public policy of the state that claims related to the recyclability of a product or packaging be truthful in practice and accurate. Consumers deserve accurate and useful information related to how to properly handle the end of life of a product or packaging.

SEC. 5. Section 42355.51 is added to the Public Resources Code, to read:

42355.51. (a) A person shall not offer for sale, sell, distribute, or import into the state any product or packaging for which a deceptive or misleading claim about the recyclability of the product or packaging is made.

(b) (1) Subject to paragraph (2), a product or packaging that displays a chasing arrows symbol, a chasing arrows symbol surrounding a resin identification code, or any other symbol or statement indicating the product or packaging is recyclable, or otherwise directing the consumer to recycle the product or packaging, is deemed

to be a deceptive or misleading claim pursuant to this section and Section 17580.5 of the Business and Professions Code unless the product or packaging is considered recyclable in the state pursuant to subdivision (d) and is of a material type and form that routinely becomes feedstock used in the production of new products or packaging.

(2) Paragraph (1) does not apply to either of the following:

(A) Any product or packaging that is manufactured up to 18 months after the date the department publishes the first material characterization study required pursuant to subparagraph (B) of paragraph (1) of subdivision (d), or before January 1, 2024, whichever is later.

(B) Any product or packaging manufactured up to 18 months after the date the department updates the material characterization study pursuant to subparagraph (B) of paragraph (1) of subdivision (d), if the product or packaging satisfied or, for a new product or packaging, would have satisfied, the requirements to be considered recyclable in the state pursuant to subdivision (d) before the publication of the updated study.

(3) Subject to paragraph (2), for a product or packaging that is not considered to be recyclable in the state pursuant to subdivision (d), all of the following apply:

(A) Displaying a chasing arrows symbol or any other statement indicating the product is recyclable directly on the product shall be deemed to be deceptive or misleading pursuant to this section and Section 17580.5 of the Business and Professions Code.

(B) If a product or packaging has multiple material types, a chasing arrows symbol or statement indicating recyclability may be displayed on the external packaging that is considered to be recyclable in the state pursuant to subdivision (d) if the chasing arrows symbol or statement makes clear in the same or greater font, font size, or symbol size which other components of the product or packaging are not recyclable.

(C) Displaying a chasing arrows symbol or any other statement indicating recyclability on packaging containing a consumable product shall, for purposes of this section, be deemed to refer only to the packaging. For purposes of this subparagraph, "consumable product" means a commodity that is intended to be used and not disposed of.

(c) For purposes of this section, none of the following constitutes a deceptive or misleading claim about the recyclability of the product or packaging pursuant to this section or Section 17580.5 of the Business and Professions Code:

(1) A person using a chasing arrows symbol in combination with a clearly visible line placed at a 45-degree angle over the chasing arrows symbol to convey that an item is not recyclable.

(2) A consumer good that is required by any federal or California law or regulation to display a chasing arrows symbol, including, but not limited to, Section 103(b)(1) of the federal Mercury-Containing and Rechargeable Battery Management Act (42 U.S.C. Sec. 14322(b)(1)) and Section 25215.65 of the Health and Safety Code.

(3) Directing a consumer to compost or properly dispose of a consumer good through an organics recycling program.

(4) A resin identification code placed inside a solid equilateral triangle.

(d) (1) On or before January 1, 2024, in order to provide information to the public sufficient for evaluating whether a product or packaging is recyclable in the state according to the criteria set forth in paragraph (2) and are of material types and forms that routinely becomes feedstock used in the production of new products or packaging, the department shall do both of the following:

(A) (i) Update the regulations promulgated pursuant to Section 41821.5 to include both of the following in the information to be submitted to the department pursuant to that section:

(I) How the material collected or processed by the operations and facilities was collected.

(II) What material types and forms are actively recovered, and not considered contaminants, by the operation or facility.

(ii) The department shall publish the information required pursuant to clause (i) in a form the department deems appropriate for achieving the purpose of this section consistent with the requirements of paragraph (3) of subdivision (b) of Section 41821.5.

(B) (i) To get a representative sample of recycling programs in the state, the department shall conduct and publish on its internet website a characterization study of material types and forms that are collected, sorted, sold, or transferred by solid waste facilities deemed appropriate by the department for inclusion in the study. The department's activities pursuant to this subparagraph, including the department's

determination of the appropriate facilities to include in the study, are exempt from the Administrative Procedure Act (Chapter 3.5 (commencing with Section 11340) of Part 1 of Division 3 of Title 2 of the Government Code).

(ii) The department shall update the material characterization study required pursuant to this subparagraph every five years, with the first update being issued by the department in 2027.

(iii) Notwithstanding clauses (i) and (ii), the department may publish additional information that was not available at the time of the most recent periodic material characterization study regarding the appropriate characterization of material types and forms.

(iv) For purposes of studying a representative sample of material types and forms in the state, within 90 days of a department request, a facility shall allow for periodic sampling conducted by a designated representative of the department on a mutually-agreed upon date and time. The department shall not request a periodic sampling of a facility if that facility was sampled during the previous 24 months.

(v) For each material characterization study conducted pursuant to this subparagraph, the department shall publish on its internet website the preliminary findings of the study and conduct a public meeting to present the preliminary findings and receive public comments. The public meeting shall occur at least 30 days after the department publishes the preliminary findings. After receiving and considering public comments, and within 60 days of the public meeting, the department shall finalize and publish on its internet website the findings of the study.

(2) Subject to paragraph (3), a product or packaging is considered recyclable in the state if, based on information published by the department pursuant to subparagraph (B) of paragraph (1), the product or packaging is of a material type and form that meets both of the following requirements:

(A) The material type and form is collected for recycling by recycling programs for jurisdictions that collectively encompass at least 60 percent of the population of the state.

(B) (i) The material type and form is sorted into defined streams for recycling processes by large volume transfer or processing facilities, as defined in regulations adopted pursuant to Section 43020, that process materials and collectively serve at least 60 percent of recycling programs statewide, with the defined streams sent to and reclaimed at a reclaiming facility consistent with the requirements of the Basel Convention.

(ii) The department may adopt regulations modifying this requirement to encompass transfer or processing facilities other than large volume transfer or processing facilities, as the department deems appropriate for achieving the purposes of this section.

(3) A product or packaging shall not be considered recyclable in the state unless the product or packaging meets all of the following criteria, as applicable:

(A) For plastic packaging, the plastic packaging is designed to not include any components, inks, adhesives, or labels that prevent the recyclability of the packaging according to the APR Design® Guide published by the Association of Plastic Recyclers.

(B) For plastic products and non-plastic products and packaging, the product or packaging is designed to ensure recyclability and does not include any components, inks, adhesives, or labels that prevent the recyclability of the product or packaging.

(C) The product or packaging does not contain an intentionally added chemical identified pursuant to the regulations implementing subparagraph (4) of subdivision (g) of Section 42370.2.

(D) The product or packaging is not made from plastic or fiber that contains perfluoroalkyl or polyfluoroalkyl substances or PFAS that meets either of the following criteria:

(i) PFAS that a manufacturer has intentionally added to a product or packaging and that have a functional or technical effect in the product or packaging, including the PFAS components of intentionally added chemicals and PFAS that are intentional breakdown products of an added chemical that also have a functional or technical effect in the product.

(ii) The presence of PFAS in a product or product component or packaging or packaging component at or above 100 parts per million, as measured in total organic flourine.

(4) Notwithstanding paragraphs (2) and (3), a product or packaging is recyclable in the state if the product or packaging has a demonstrated recycling rate of at least 75 percent, meaning that not less than 75 percent of the product or packaging sorted and aggregated in the state is reprocessed into new products or packaging.

(5) (A) Before January 1, 2030, notwithstanding paragraphs (2) and (3), a product or packaging not collected pursuant to a curbside collection program is recyclable in the state if the non-curbside collection program

recovers at least 60 percent of the product or packaging in the program and the material has sufficient commercial value to be marketed for recycling and be transported at the end of its useful life to a transfer, processing, or recycling facility to be sorted and aggregated into defined streams by material type and form.

(B) After January 1, 2030, notwithstanding paragraphs (2) and (3), a product or packaging not collected pursuant to a curbside collection program is recyclable in the state if the non-curbside collection program recovers at least 75 percent of the product or packaging in the program and the material has sufficient commercial value to be marketed for recycling and be transported at the end of its useful life to a transfer, processing, or recycling facility to be sorted and aggregated into defined streams by material type and form.

(6) Notwithstanding paragraphs (2) and (3), a product or packaging is recyclable in the state if the product or packaging is part of, and in compliance with, a program established pursuant to state or federal law on or after January 1, 2022, governing the recyclability or disposal of that product or packaging if the director determines that the product or packaging will not increase contamination of curbside recycling or deceive consumers as to the recyclability of the product or packaging.

(7) The information published by the department pursuant to paragraph (1) shall not limit the discretion of a local agency under existing law to decide whether, and to what extent, a material type or form shall be accepted by a local recycling program.

(e) For purposes of this section, "chasing arrows symbol" has the meaning set forth in subdivision (f) of Section 17580 of the Business and Professions Code.

(f) Consistent with the waste hierarchy established pursuant to Section 40051, and pursuant to Section 40180, for purposes of this section, "recycling," "recyclable," and "recyclability" do not include transformation, as defined in Section 40201, EMSW conversion, or production of fuels.

SEC. 6. No reimbursement is required by this act pursuant to Section 6 of Article XIII B of the California Constitution because the only costs that may be incurred by a local agency or school district will be incurred because this act creates a new crime or infraction, eliminates a crime or infraction, or changes the penalty for a crime or infraction, within the meaning of Section 17556 of the Government Code, or changes the definition of a crime within the meaning of Section 6 of Article XIII B of the California Constitution.

NO.	品名規格	數量	料號
1	SP-305 固定座	1 PCS	MB305012
2	PVC 30P (SP-305B) CT-12	20 g	RPP03012
3	IS-14N 銅片	3 PCS	BBB14N00
4	IS-14N 內模套	1 SET	MI14N000
5	PVC 50P (IS-14N) CT-12	14 g	RPP05012
6	紅一點實心三角環保袋 12X26CM	1 PCS	KPRSX003

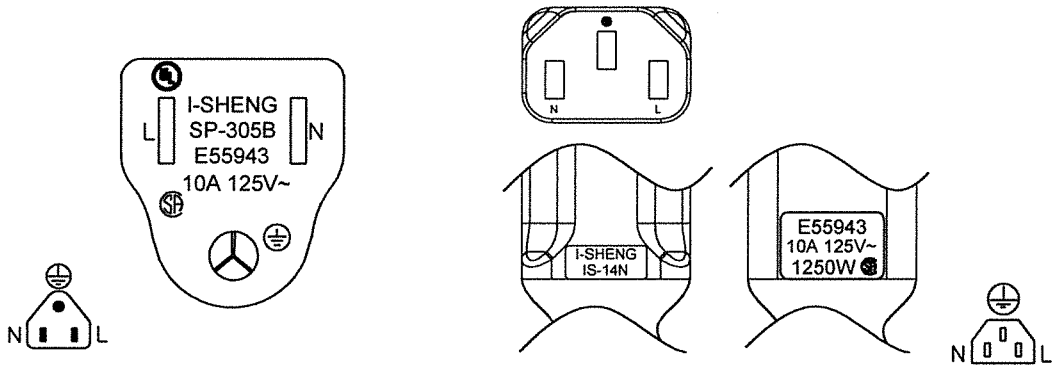

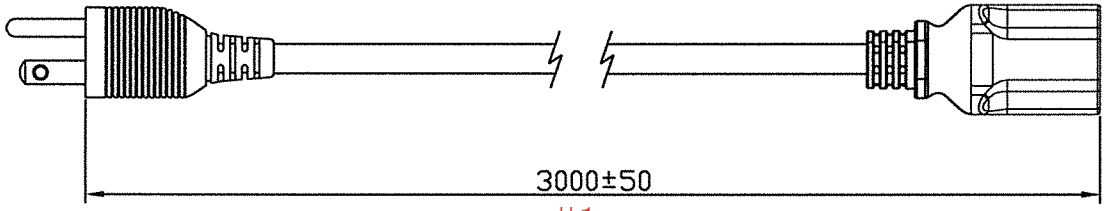

#1

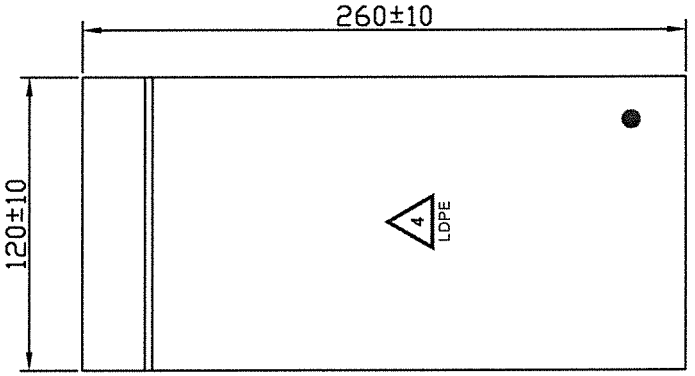

設計驗證工程課
2026 -09- 29
發行

環保袋 (PE BAG)

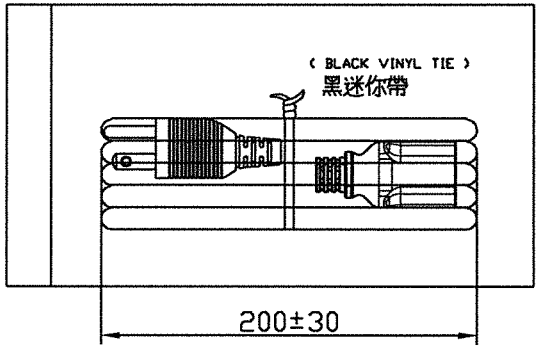

產地	□ TWIS □ SGIS □ KSIS				
線材	SVT 18/3 60°C 凹字 CT-12(BLACK)				
插頭	SP-305B + IS-14N	剪線長度	3000		
客戶	名稱	鈺緯	單位	mm	版次
	料號	3KP0000010G(K0128)	圖號	S115218-2	A

I-SHENG ELECTRIC WIRE & CABLE CO.,LTD.
鎰勝工業股份有限公司

製圖	洪素婉2026.6.8
審查	
核准	陳永鎮2026.6.8

U4N VS3316 12 300 02

WIRING COLOR:
E: Green
N: White
L: Black

線材印字:
(UL) E88265 SVT 60℃ 3X18AWG(0.824mm²) 300V VW-1 I-SHENG
CSA LL81924 TYPE SVT 60℃ 3X0.824mm²(18AWG) 300V VW-1

FORM:I101c

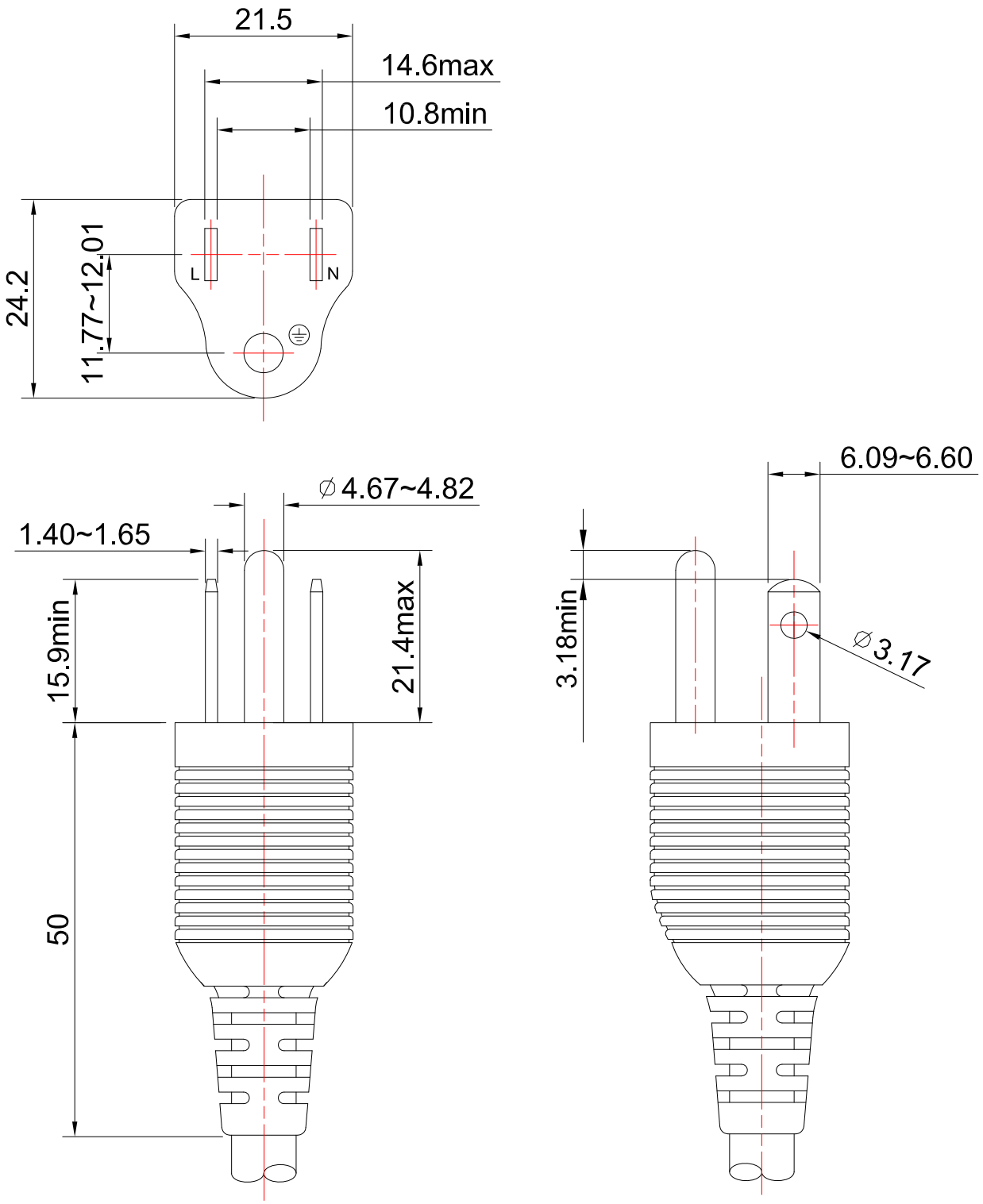

DWG. NAME	TYPE AND DIMENSIONS		
APPLY TO STANDARD	AMERICAN APPROVAL POWER SUPPLY CORD		
ISSUE DATE	2009/10/15	REV.	B
REVISE DATE	2011/05/25	UNIT	mm
TYPE	SP-305B	DWG. NO.	D5B-3
WIRE	SVT,SJT 18AWGX3C		
I-SHENG ELECTRIC WIRE & CABLE CO.,LTD. 鎰勝工業股份有限公司		DESIGN BY	BOBOAN
		REVIEW BY	FANNY
		APPROVE BY	RYAN

TOLERANCE	
≤ 1.0	±0.3
≤ 10.0	±0.5
≤ 20.0	±1.0
> 20.0	±2.0

FORM : I106a

MARKING

發行 ISSUED 2025.12.16	標準名稱 STD. NAME	AMERICAN APPROVAL POWER SUPPLY CORD	編號 FILE NO. D5B-3-2
修訂 REVISED B	品名 CAT NO.	SP-305B 成品標識示意圖	頁次 PAGE 1

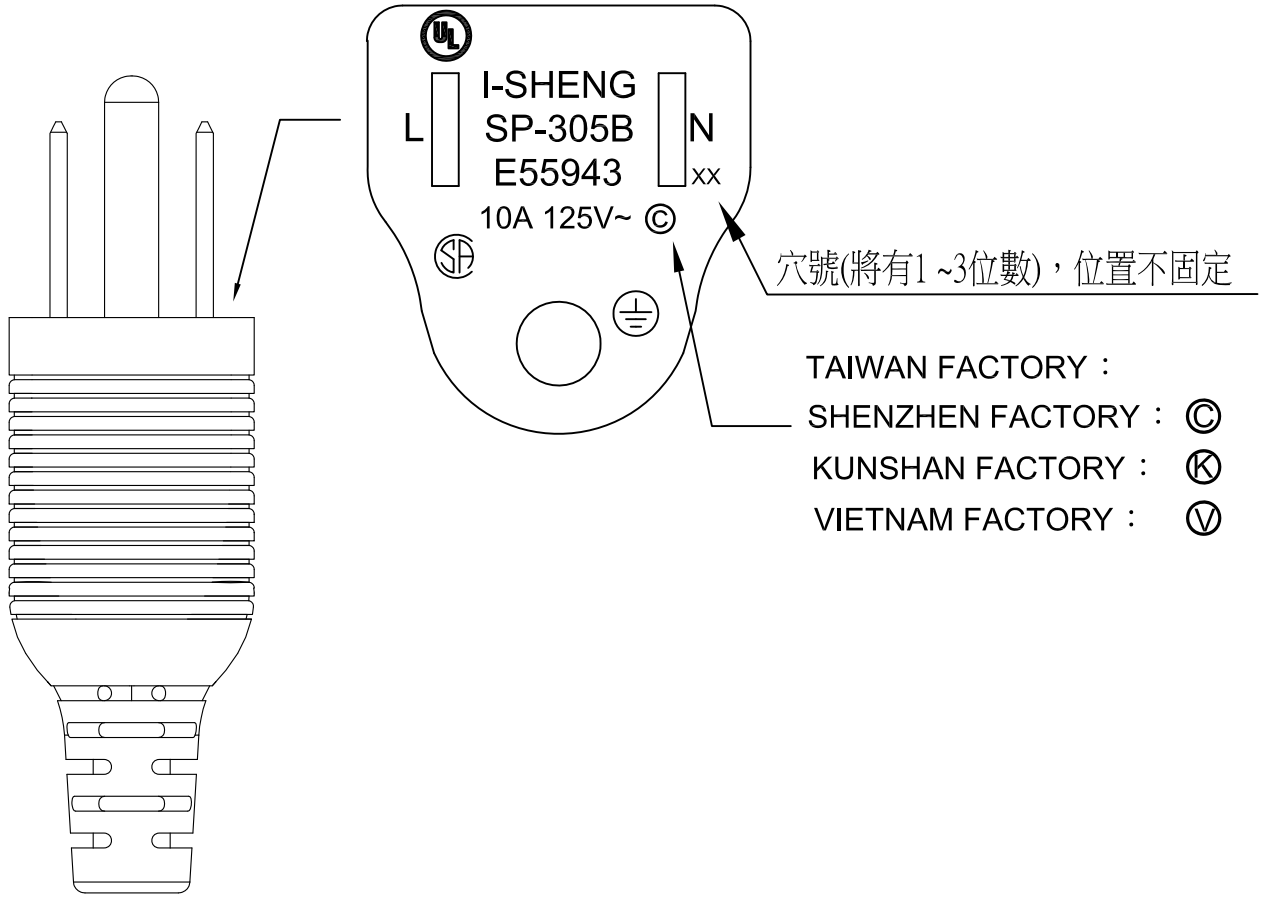

I-SHENG ELECTRIC WIRE & CABLE CO.,LTD.	製圖	洪素婉	審查	劉宗科	核准	陳永鎮

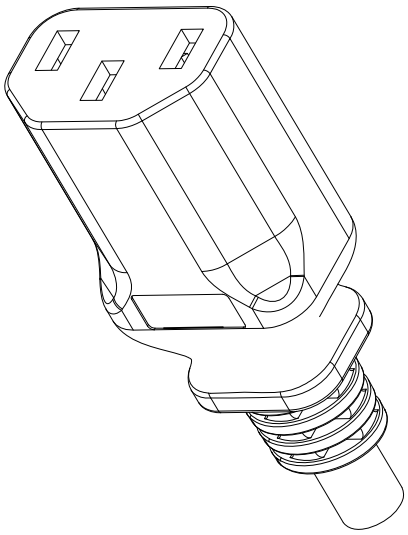

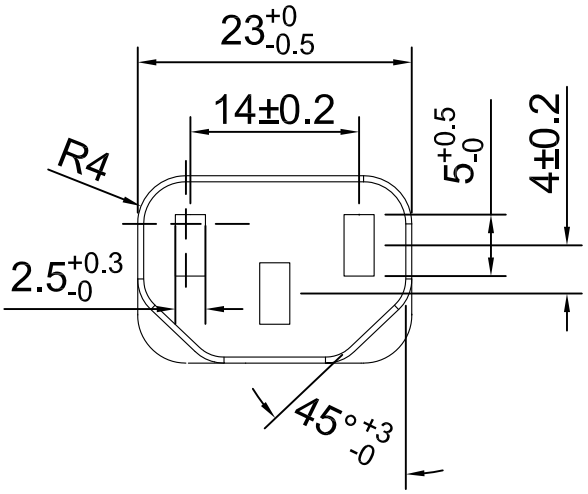

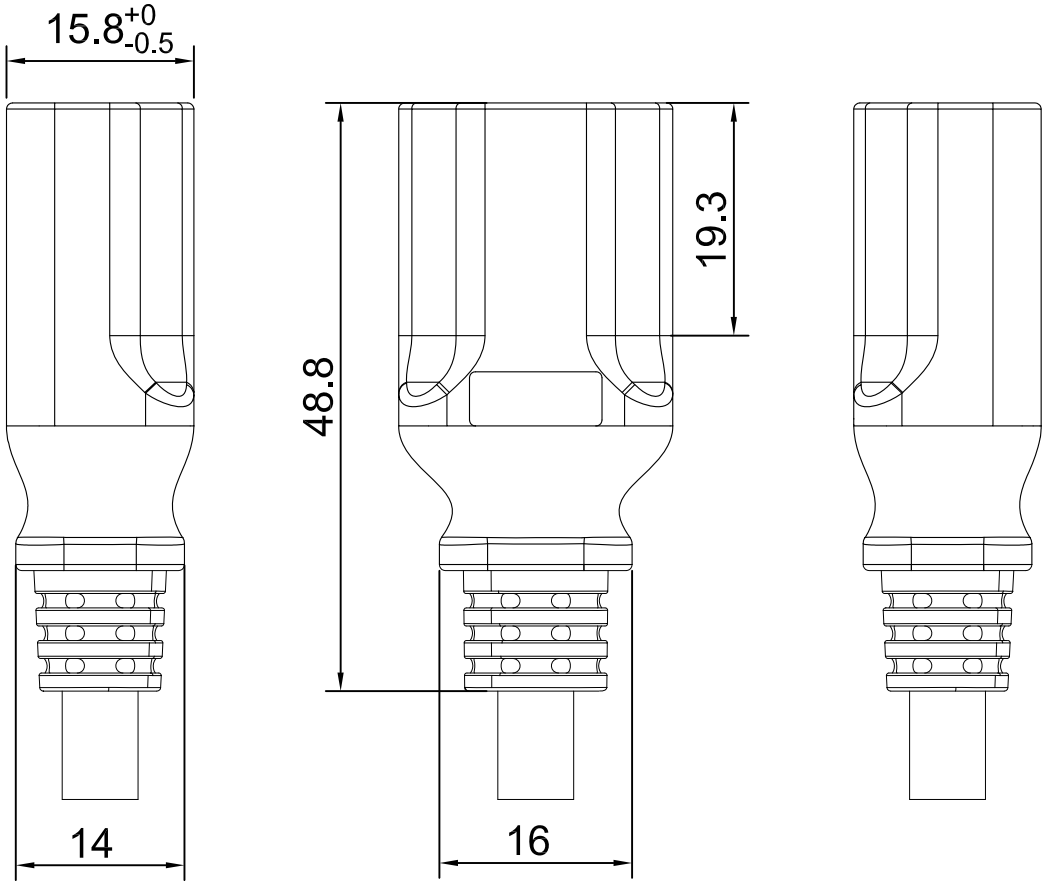

DWG. NAME	TYPE AND DIMENSIONS		
APPLY TO STANDARD	AMERICAN APPROVAL POWER SUPPLY CORD		
ISSUE DATE	2014/03/26	REV.	A
REVISE DATE		UNIT	mm
TYPE	IS-14N	DWG. NO.	L4N-1
WIRE	SVT 18AWG/3C		

TOLERANCE	
≤ 1.0	±0.3
≤ 10.0	±0.5
≤ 20.0	±1.0
> 20.0	±2.0

I-SHENG ELECTRIC WIRE & CABLE CO.,LTD.
鎰勝工業股份有限公司

DESIGN BY	Fanny Wang
REVIEW BY	James Chan
APPROVE BY	Ryan Lai

FORM : I106a

MARKING

發行 ISSUED 2026.5.8	標 準 名 稱 STD. NAME	AMERICAN APPROVAL POWER SUPPLY CORD	編號 FILE NO. L4N-1-1
修訂 REVISED C	品 名 CAT NO.	IS-14N 成品標識示意圖	頁次 PAGE 1

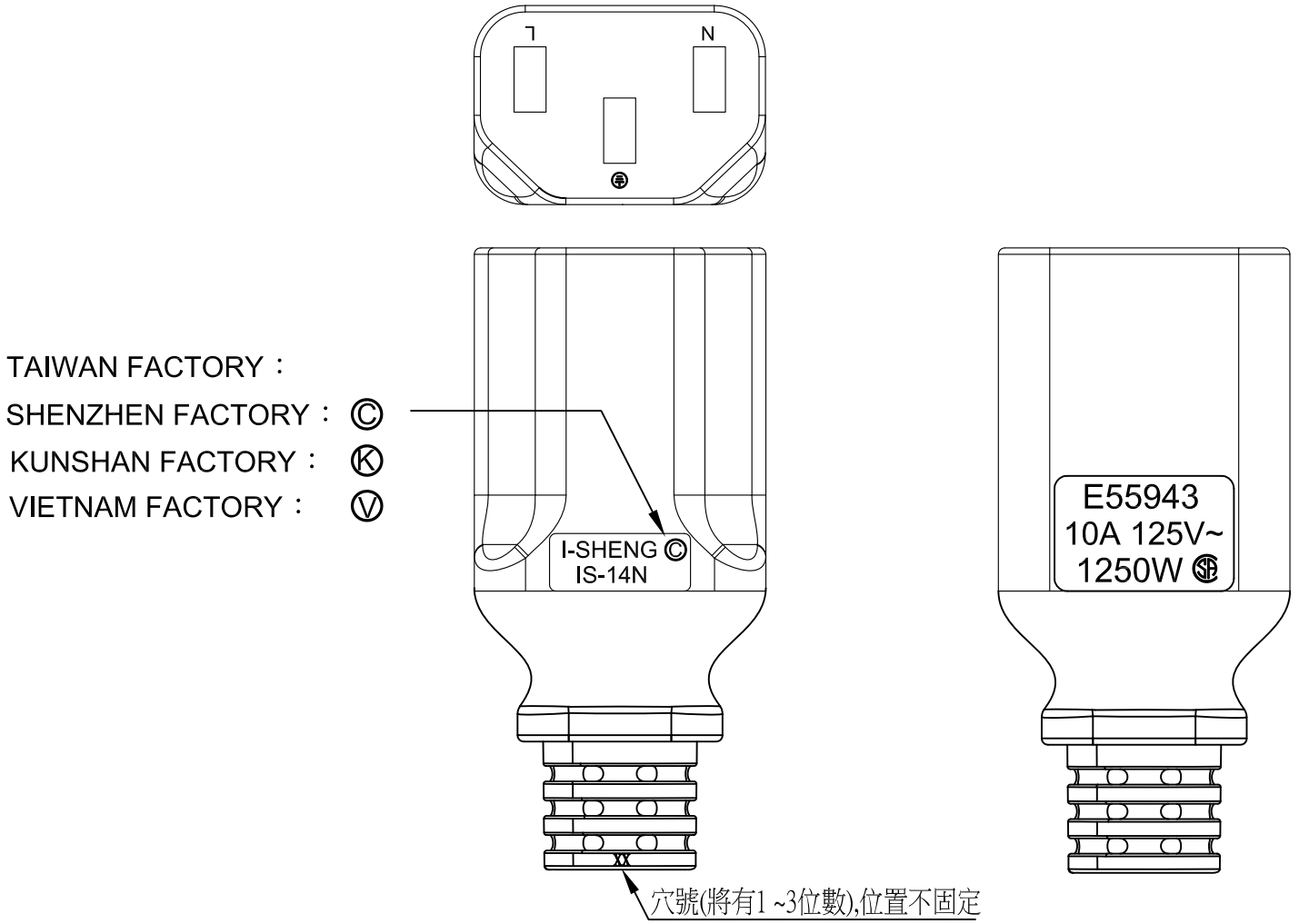

I-SHENG ELECTRIC WIRE & CABLE CO.,LTD.	製圖	洪素婉	審查	劉宗科	核准	陳永鎮

SPECIFICATION

Rev. 1.0

Issued	2026/7/7	Description	File No.	U4NVS3316
Revised		SP-305B+IS-14N SVT 18/3C 60℃	Page	1/1

1. Scope :
   This specification is applied to power supply cord conforming to:
   UL 62 UL 817 UL 60320 CSA C22.2

2. Construction and dimensions:
   In accordance with the following tables and attached drawings.

Item	Cat. No.	Rating		Approved No.	
		A	V	UL	CSA
Plug	SP-305B	10	125	E55943	LR 35162
Connector	IS-14N	10	125	E55943	LL 41230

Flexible cord					SVT 18/3C			
Approved No.					E88265、E314513、E315167、E531361、LL81924			
Rating					300V 60℃			
Conductor		Insulation			Jacket			Conductor Resistance
Nominal (mm^2) (AWG)	Composition (pcs/mm)	Avg. Thickness (mm)	Min Thickness (mm)	Diameter (mm)	Avg. Thickness (mm)	Min Thickness (mm)	Diameter	Max 22.4Ω/km at 20℃
18AWG	40/ ∮ 0.162 +0.003/-0.008	0.38	0.33	∮ 2.05±0.1	0.76	0.61	∮ 6.15±0.2	In case of dispute, Conductor resistance shall be the referee method.

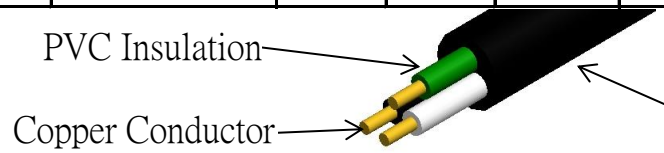

Insulation Color
Black
White
Green

3. Cable marking on the sheath:

Taiwan: (UL) E88265 SVT 60℃ 3X18AWG(0.824mm^2) 300V VW-1 I-SHENG CSA LL81924 TYPE SVT 60℃ 3X0.824mm^2(18AWG) 300V VW-1
Shenzhen: (UL) E88265-C SVT 60℃ 3X18AWG(0.824mm^2) 300V VW-1 I-SHENG CSA LL81924 TYPE SVT 60℃ 3X0.824mm^2(18AWG) 300V VW-1
(UL) E315167 SVT 60℃ 3X18AWG(0.824mm^2) 300V VW-1 I-SHENG CSA LL81924 TYPE SVT 60℃ 3X0.824mm^2(18AWG) 300V VW-1
Kunshan: (UL) E88265-K SVT 60℃ 3X18AWG(0.824mm^2) 300V VW-1 I-SHENG CSA LL81924 TYPE SVT 60℃ 3X0.824mm^2(18AWG) 300V VW-1
(UL) E314513 SVT 60℃ 3X18AWG(0.824mm^2) 300V VW-1 I-SHENG CSA LL81924 TYPE SVT 60℃ 3X0.824mm^2(18AWG) 300V VW-1
Vietnam: (UL) E88265-V SVT 60℃ 3X18AWG(0.824mm^2) 300V VW-1 I-SHENG CSA LL81924 TYPE SVT 60℃ 3X0.824mm^2(18AWG) 300V VW-1
(UL) E531361 SVT 60℃ 3X18AWG(0.824mm^2) 300V VW-1 I-SHENG CSA LL81924 TYPE SVT 60℃ 3X0.824mm^2(18AWG) 300V VW-1

I-SHENG ELECTRIC WIRE & CABLE CO., LTD.

發行 ISSUED 2000.03.05	標準名稱 STD.NAME	SPECIFICATION	檔案編號 FILE NO
修訂 REVISED 2021.06.01	題目 TITLE	THE CHARACTERISTIC OF POWER SUPPLY CORD FOR UL & CSA	SPEC-AC

Items 項目		Conditions 條件		Specification 規格
1	Insulation resistance 絕緣抵抗	The measurement shall be made after an open-circuit output of 500 V for 1 minute at an ambient temperature of 20℃.	a) Live parts of opposite polarity, b) Live parts and dead metal parts that are exposed to contact by persons or that may be grounded in service. c) Live parts and any surface of insulating material that is exposed to contact by persons or that may be in contact with ground in service.	The insulation resistance shall not be less than 100 MΩ.
2	Electric strength 耐電壓	Each cord set or power-supply cord shall be capable of withstanding without breakdown for a period of 1 minute The application of a 60-Hz potential of 2000 V between any two conductors. Testing transformer capacity (耐壓計容量) :500 VA or more Leakage current (遮斷電流) :2mA frequency (周波數) :50/60 Hz	Between two Conductors 2000V/1min. Between conductors And outside body. 2000V/1min.	There was no dielectric breakdown.
3	Temperature rise 溫昇	A rated current is passed through the circuit. The devices under test were caused to carry the test current continuously for a period of four hours.		The temperature rise shall not exceed 30 degrees above the ambient temperature.

I-SHENG ELECTRIC WIRE & CABLE CO., LTD.

發行 ISSUED 2000.03.05	標準名稱 STD.NAME	SPECIFICATION	檔案編號 FILE NO
修訂 REVISED 2021.06.01	題目 TITLE	THE CHARACTERISTIC OF POWER SUPPLY CORD FOR UL & CSA	SPEC-AC

<table>
<tr><th colspan="2">Items
項目</th><th>Conditions
條件</th><th>Specification
規格</th></tr>
<tr><td>4</td><td>Flexing test
屈曲強度
(plug)</td><td>For plug apply a minimum of 2,500 flexing cycles consist of rotation of the jaws from the vertical position until 90 degrees to one side, back past the vertical position until 90 degrees to the other side, and back to the vertical position. The rate of testing shall be 10 cycles per minute.
<table>
<tr><th></th><th>Load Weight (g)</th><th>Angle θ(⁰)</th><th>Furthermore 90°rotational direction (turns)</th><th>Rate of flexing per min (turns)</th></tr>
<tr><td>plug</td><td>SPT TYPES 113g
HPN TYPES 284g</td><td>90</td><td>2500</td><td>10</td></tr>
</table>
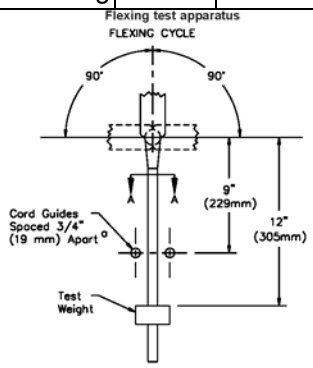
</td><td rowspan="2">After the test the sample shall show no damage except that breakage.</td></tr>
<tr><td></td><td>Flexing test
屈曲強度
(Connector)</td><td>The sample is loaded with a weight and the bending angle of 90° (45° on each side of the vertical),
the number of flexings being10000 times and the rate of flexing 60/min
circular section flexible cables are turned through 90° in the oscillating member after 5,000 flexings.
specimens with flat flexible cables are only bent in a direction.
<table>
<tr><th>Load Weight (N)</th><th>Angle θ(⁰)</th><th>Optional direction (turns)</th><th>Rate of flexing per min (turns)</th></tr>
<tr><td>0.75mm²↓ (10N)
1.0mm²↑ (20N)</td><td>45</td><td>10000</td><td>60</td></tr>
</table>
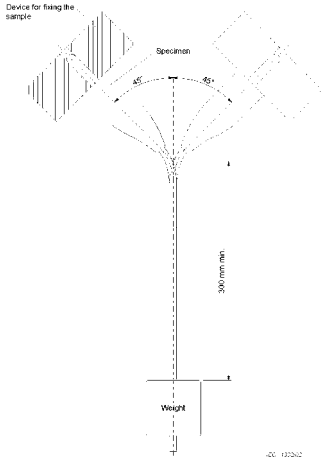
</td></tr>
</table>

I-SHENG ELECTRIC WIRE & CABLE CO., LTD.

發行 ISSUED 2000.03.05	標準名稱 STD.NAME	SPECIFICATION	檔案編號 FILE NO
修訂 REVISED 2021.06.01	題目 TITLE	THE CHARACTERISTIC OF POWER SUPPLY CORD FOR UL & CSA	SPEC-AC

<table>
<tr><th colspan="2">Items
項目</th><th>Conditions
條件</th><th>Specification
規格</th></tr>
<tr><td>5</td><td>Withdrawal force
引拔力</td><td>Verification of the maximum withdrawal force
The connector is inserted to the full depth into and withdrawn from the appropriate appliance inlet 10 times. It is then again inserted for a principal mass is such that it exerts a force equal to one-tenth of the maximum withdrawal force specified in the table and it shall be made in one piece and a supplementary.

Verification of the minimum withdrawal force
The test pin gauge is applied to each individual connector contact with the contact axes vertical and the gauge hanging vertically downwards. The total mass of the gauge shall be such as to exert the applicable force as show in table.
<table>
<tr><th rowspan="2">Type of connector</th><th colspan="3">Withdrawal force
N (kg)</th></tr>
<tr><th colspan="2">Multi-pin gauge</th><th>Single-pin gauge minimum</th></tr>
<tr><th></th><th>Max</th><th>Min</th><th></th></tr>
<tr><td>0.2A
2.5A
6A
10A</td><td>50
(5.1)</td><td>10
(1.0)</td><td>1.5
(0.15)</td></tr>
<tr><td>16A</td><td>60
(6.1)</td><td>15
(1.5)</td><td>2
(0.2)</td></tr>
</table>
</td><td>After Verification of the maximum withdrawal force test. The principal mass is hung on the connector without jolting and the supplementary mass is allowed to fall from a height of 5 cm on to the principal mass. The connector shall not remain in the appliance inlet.

After Verification of the minimum withdrawal force test.
The test pin gauge is applied gently, and care is taken not to knock the assembly when checking the minimum withdrawal force. The gauge shall not fall from the contact assembly within 3 sec.</td></tr>
<tr><td>6</td><td>Resistance to Aging
老化試驗</td><td>Samples of each catalog number were placed in an air-circulating oven maintained at 100 °C for 96 hours.</td><td>There was no cracking or deformation.</td></tr>
<tr><td>7</td><td>Polarity/Continuity
導通</td><td>The power cord shall be test polarity and continuity, the test voltage is 24V DC</td><td>Without breakdown</td></tr>
</table>

I-SHENG ELECTRIC WIRE & CABLE CO., LTD.

發行 ISSUED 2000.03.05	標準名稱 STD.NAME	SPECIFICATION	檔案編號 FILE NO
修訂 REVISED 2021.06.01	題目 TITLE	THE CHARACTERISTIC OF POWER SUPPLY CORD FOR UL & CSA	SPEC-AC

Items 項目		Conditions 條件	Specification 規格
8	Resistance to heat 耐熱試驗	The test being made in a heating cabinet at a temperature of 100 ±2℃. The specimen is clamped between steel jaws, having a cylindrical face of 25mm radius, a width of 15mm and a length of 50mm. The corners are rounded with a radius of 2.5mm. The specimen is clamped in such a way that the jaws press against it in the area where it is gripped in normal use, the centre line of the jaws coinciding as nearly as possible with the centre of this area. The force applied through the jaws is 20N.	After 1h, the jaws are removed and the specimen shall show no damage within the meaning of this standard.
9	Moisture resistance 耐濕性	The humidity treatment is carried out in a humidity cabinet containing air with a relative humidity maintained between 91% and 95%. The temperature of the air, at all places where specimens can be located, is maintained within ±1 ℃ of any convenient value t℃ between 20℃ and 30℃. Before being placed in the humidity cabinet, the specimens are brought to a temperature between t℃ and (t+4) ℃. The specimens are kept in the cabinet for - 168h (7 days) for connector with earthing contact and for appliance inlets with earthing contact, which are submitted as individual accessories, not incorporated in other equipment. - 48h (2 day) in all other cases.	After this treatment, the specimen shall show no damage.
10	Blade Connection Secureness 銅片與線材壓著力測試	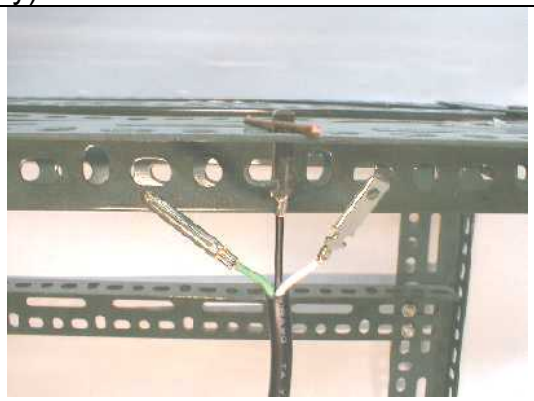 A pull of 20 lbf (89 N) shall be applied if the conductor is No. 18 AWG or larger in size. If a smaller cord is used, the pull shall be 8 lbf (36 N).	The connection shall not break under a pull applied for 1 minute between the element and the conductor before the element has been assembled into the fittings..

	Items 項目	Conditions 條件	Specification 規格
11	Blade security 銅片牢固力測試	Apply a straight pull of 98 Newton for 2 min between an attachment plug and blade(s). 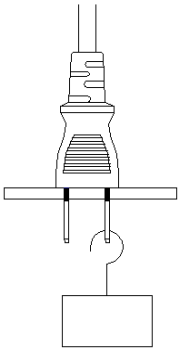	After the test, the blades shall not be displaced by more than 2.4mm.
12	Strain relief 外部拉力測試	Apply a straight pull of 137.2 Newton for 1 min between an attachment plug and a flexible cord and between a cord connector and a flexible cord. 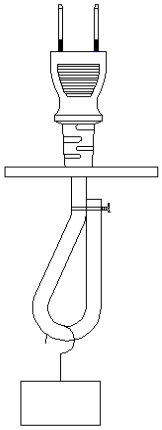 Between an attachment plug and a flexible cord 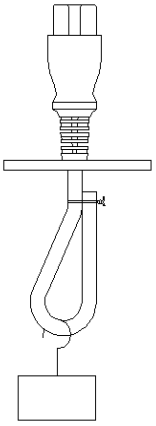 Between a cord connector and a flexible cord	Without damage, such as displacement or looseness or detachment of metal parts, conductor break, insulation damage etc.

I-SHENG ELECTRIC WIRE & CABLE CO., LTD.

發行 ISSUED 2000.03.05	標準名稱 STD.NAME	SPECIFICATION	檔案編號 FILE NO
修訂 REVISED 2021.06.01	題目 TITLE	THE CHARACTERISTIC OF POWER SUPPLY CORD FOR UL & CSA	SPEC-AC

Items 項目		Conditions 條件	Specification 規格
13	Abrupt Pull 突拉測試	Each of six representative assemblies consisting of an attachment plug or current tap molded onto a 12 inch (305 mm) length of flexible cord is necessary for the test. The angle is 45° to the vertical in the event that the grounding conductor doesn't break before any of the line conductors or the test is discontinued after the maximum of 25 impacts has been reached, the acceptability of the grounding conductor is to be verified by causing it to carry a current of 40 A at 6 – 12 V for 2 minutes. 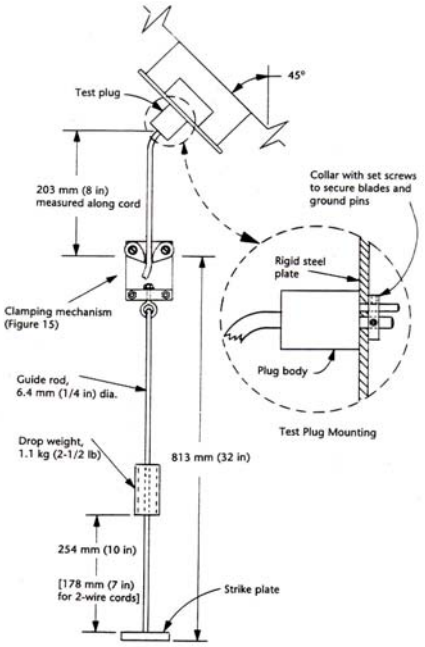 	For each sample, the grounding conductor did not open before any of the line conductors
14	Bending strength of connector body 本體機械強度	After the connector's point is fixed as shown in the figure below. Load of 10kg shall be applied vertically and slowly for 15 s. 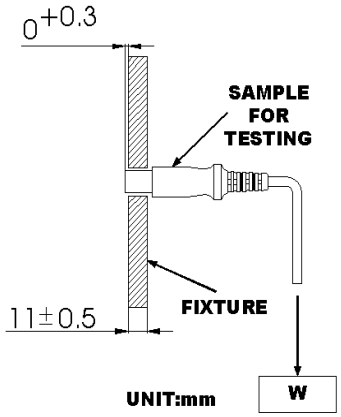 	After the test, the connector shall show no damage.