Customer 客戶名稱： Q I S D A

No 序列號:

Attention 聯繫人： Sunny

Approval Date 承認日期:

Your Part No 客戶料號： 2B.C0120.101

Sample No 樣品號.：

SPECIFICATION

規 格 說 明 書

Model 型號： U S B 3.0

Spec No 規格： U S B - A 2 D 1 1 3 F - 0 B 1 8 N - W

Customer Approval Status 客戶承認狀況	HUATAC File Publish Sign 華傑文件發行蓋章處
Dsg'd 設計:	Edition 版本： A
Chk'd 審核:	
App'd 批准:	
File Publish Sign 文件發行蓋章處	File clerk 文管:

HUA JIE (TAIWAN) CORP.

臺灣華傑股份有限公司

6F,NO.25,JI-LIN ROAD.CHUNG LI.

TAIWAN (CHUNGLI INDUSTRILA ZONE)

臺灣中壢工業開發區吉林路 25 號 6 樓

E-mail:huajie@mail.hua-jie.com

SUZHOU HUAJIE ELECTRONICS CO.LTD

蘇州華傑電子有限公司

NO.7.Zhangzhuang Road Huangqiao

Town Suzhou.China

中國江蘇省蘇州市黃橋鎮張莊路 7 號

技术部 15.12.02 卢红

Dsg'd 設計

技术部 15.12.02 杨勇

App'd 批准

Sales 業務員

REV	DESCRIPTION	DATE	ECN NO.	CHANGER
A-5	Add P/N	15.06.02		zw-Lin
A-6	Add P/N	15.06.17		zw-Lin
A-7	Update drawing	15.11.24		Great

P/N:
USB-A2D113F/108F-XX18X-W
- W=HF
- Shell plate spec: T=Tin plated, N=Nickel plated
- Housing colour: B=Black, L=Blue, W=White
- Contact plate spec: 0=FU", 1=3U",2=6U", 3=15U",4=30U"

Specification:
1. Current Rating: 1.8AMP for Pin1 and Pin4, 0.25AMP for Other contacts .
2. Voltage Rating: 30V.
3. Insulation Resistance: 100MΩ Min.
4. Contact Resistance: 30mΩ Max for Pin1 & Pin4 and Pin10 & Pin13; 50mΩ Max for Other contacts.
5. Dielectric Withstanding Voltage: 100V AC (RMS)

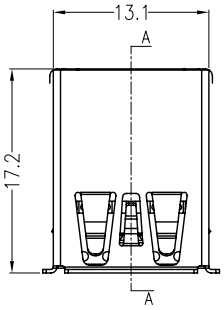

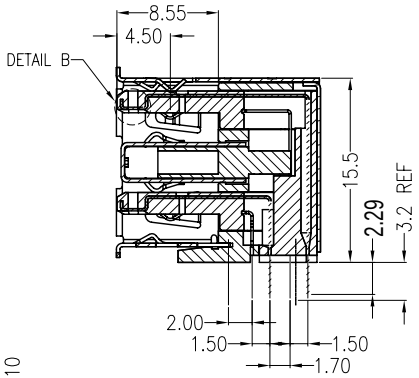

SECTION A-A
SCALE 1:1

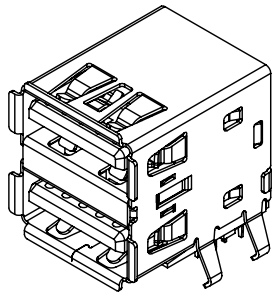
3D VIEW
SCALE 1:1

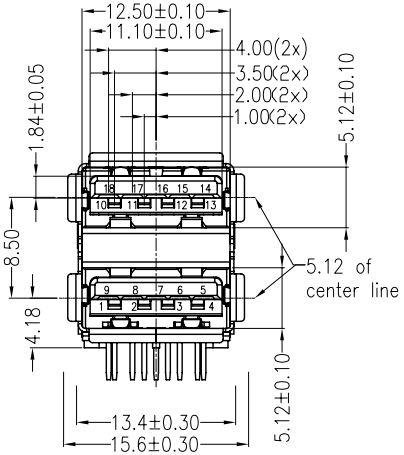

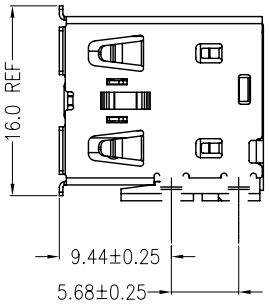

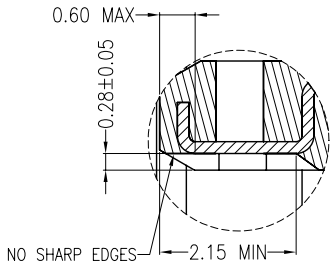

DETAIL B
SCALE 5:1

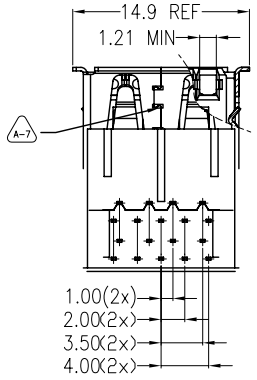

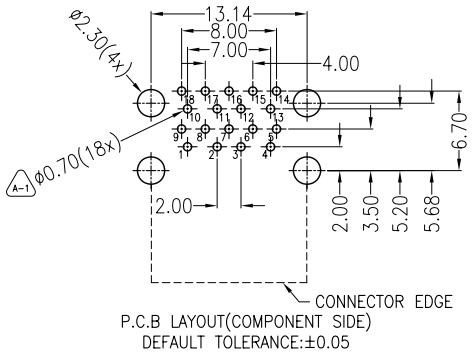

P.C.B LAYOUT(COMPONENT SIDE)
DEFAULT TOLERANCE:±0.05

Table 1:

10312418A010	PBT 蓝色无卤 FU 外壳铜料（镀镍）
10312218F001	PBT 蓝色无卤 足30U 外壳镀亮锡
10312418A009	上层PBT 白色无卤 下层PBT 蓝色无卤 1U Min 外壳镀镍
10312418A007	主体PBT 蓝色无卤 后塞PBT 黑色无卤 FU 外壳镀镍
USB-A2D108F-0L18N-W	PBT 蓝色无卤 FU 外壳铁料(镀镍)
USB-A2D108F-3L18N-W	PBT 蓝色无卤 15U 外壳铁料(镀镍)
USB-A2D108F-4L18N-W	PBT 蓝色无卤 30U 外壳铁料(镀镍)
USB-A2D113F-3L18N-W	PBT 蓝色无卤 15U 外壳铜料(镀镍)
USB-A2D113F-0B18N-W	PBT 黑色无卤 FU 外壳铜料(镀镍)
USB-A2D113F-4L18N-W	PBT 蓝色无卤 30U 外壳铜料(镀镍)

N.O	PART NAME	MATERIAL	QT.Y	REMARK
11	5p short terminal	C2680	5P	T=0.2mm
10	5p long terminal	C2680	5P	T=0.2mm
9	4p short terminal	C5191	4P	T=0.2mm
8	4p long terminal	C5191	4P	T=0.2mm
7	Middle cover	SUS 304	1Pcs	T=0.3mm
6	Cover	SPCC	1Pcs	T=0.3mm
5	Shell	SPCC/C2680	1Pcs	T=0.3mm
4	Stopper	PBT 无卤	1Pcs	Blue/Black
3	Insert mold short conector	PBT 无卤	1Pcs	Blue/Black
2	Insert mold long conector	PBT 无卤	1Pcs	Blue/Black/White
1	Housing	PBT 无卤	1Pcs	Blue/Black

SUZHOU HUAJIE ELECTRONICS CO.,LTD

X. ±0.38	X.° ±4°	UNIT:	mm	DR:	Great	TITLE:	USB 3.0 A 母双层 DIP 90°	
.X ±0.25	.X° ±2°	3DR:		DE:	Great			
.XX±0.20	.XX°	SCALE:	1:1	CHKD:		SHEET:	1/1	P/N: See table 1
.XXX±0.10	.XXX°							
CUSTOMER DRAWING		REV:	A-7	APPD:		D/N:	1110-0108	M/N:

版本	变 更 内 容	日 期	ENC NO.	变更人
A-4	变更客户专用二维码标签	2014-06-05	20140605113	肖小华
A-5	真空盒加真贴二维码标签	2016.11.12		薛小龙

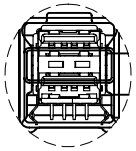

DETAIL E
SCALE:6:1



LABEL: "D"
SCALE: 5:1

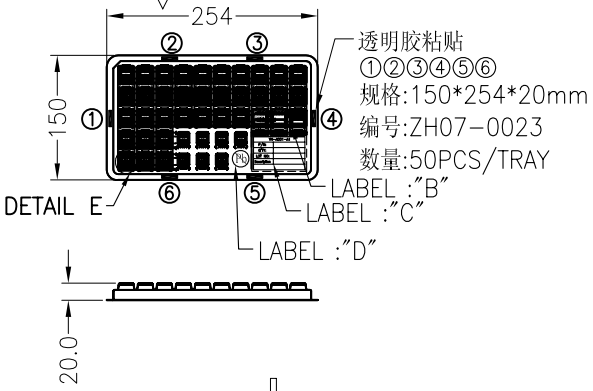

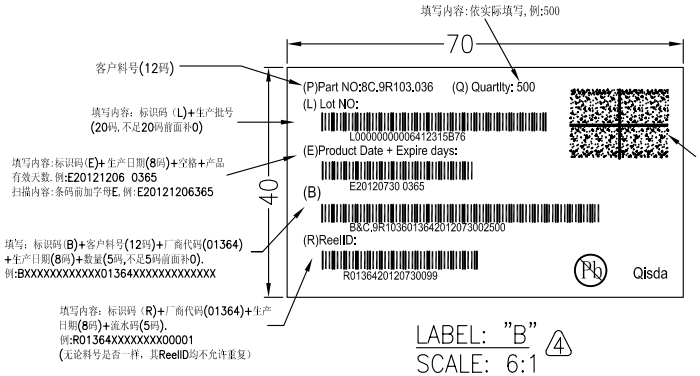

LABEL: "B" ④
SCALE: 6:1

填写内容:Lot No,E码,B码,及ReelID,每项内容之间用分号隔开且内容只放于一行中
L00000000006412315B76;
E20120730 0365;
B&C.9R10360136420120730025 00;
R0136420120700099

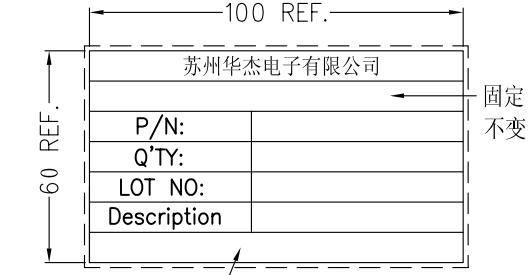

LABEL: "A" ②
SCALE: 3:1

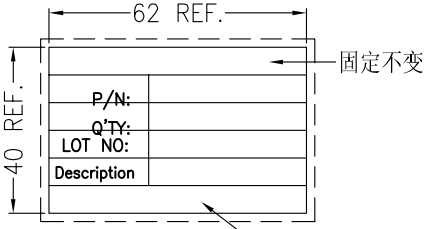

LABEL: "C"
SCALE: 5:1

客户料号(具体按客户当批订单料号为准)

注意事项:
1.包装盘与纸箱尺寸如图所示.
2.产品整齐地放于包装盘格子内,每盘放50PCS,用透明胶粘贴,右下角表面贴标签:LABEL"B",标签如图:LABEL"C";环保标签如图:LABEL"D".
3.每5盘捆为一扎(如尾数不够5盘,也将其捆在一起归为一扎),并用PE膜扎好,每扎左上角贴条码标签如图:LABEL"B".
4.每箱装数量2800PCS产品.
5.内外纸箱均需用封箱胶封好箱口,封箱必须是以"工"字型封箱,先贴横向长胶带,再贴纵向两条胶带,封箱后箱口的间隙不易过大.
6.尾数箱需用填充物填充,防止纸箱受力变形.
7.包装箱右侧麦右上角贴专用标签如图:LABEL"A";条码标签如图:LABEL"B";环保标签如图:LABEL"D".

5盘/扎

每扎左上角贴
LABEL:"B"

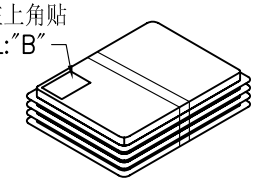

6扎/内箱

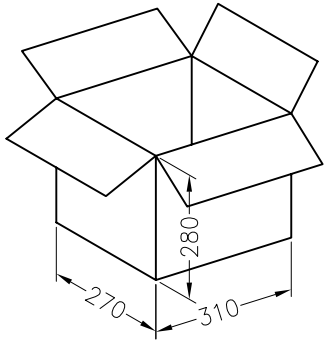

规格:310*270*280mm
编号:ZH08-0020

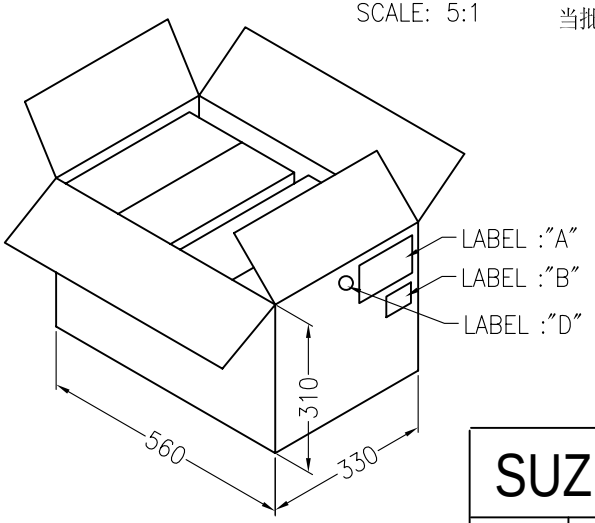

规格:560*330*310mm
编号:ZH08-0019

序号	名 称	编 号	数 量	单 重	材 质	规 格
4	外纸箱	ZH08-0019	1PCS	840g	K=K	560*330*310mm
3	内纸箱	ZH08-0020	2PCS	400g	B=B	310*270*280mm
2	真空盒	ZH07-0023	56PCS	40.8g	PVC	150*254*20mm
1	连接器	———	2800PCS	4.7g	——	———

SUZHOU HUAJIE ELECTRONICS CO.,LTD

X. ±1.00 .X ±0.50 .XX±0.30 .XXX	X.° ±4° .X° ±2° .XX° .XXX°	单位	mm	制图	薛小龙	品名规格	USB A母双层DIP 90度		
		角法		审核					
		比例	1:1	生产		页数	1/1	料号	USB-A2D113F-0B18N-W
包装图		版本	A-5	业务		图号	511-457	模号	———

1. SCOPE

This specification covers performance, methods and quality requirements for Universal Serial Bus (USB) plug and receptacle connectors. These connectors are cable mounted plug and printed circuit board mounted receptacle connectors.

2. REQUIREMENTS

2.1 Design and Construction

Product shall be of the design , construction and physical dimensions specified The in applicable product drawing.

2.2 Materials and Plating

They are specified on applicable product drawing.

2.3 Ratings

A. Voltage: 30 VAC (rms)

B. Current: 1.8 A

C. Operating temperature: -20℃ to +85℃

D. Storage temperature: -25℃ to +85℃

E. Nominal Temperature Rating: +20℃

2.4 Test Requirements and Procedures Summary

3. TEST Requirements and Procedures Summary

3.1. Electrical Performance

Item	Test Description	Test requirement	Test procedure
3.1.1	Insulation Resistance	100 MΩ. minimum.	EIA 364 – 21 Method 302 Test voltage 500±50V/DC between adjacent contacts of mated and unmated connector assemblies.
3.1.2	Dielectric Withstanding Voltage	The dielectric must Withstand 100V AC for one minute at sea level. No flashover & sparkover & excess leakage & breakdown	EIA 364 – 20 Test voltage 100V /AC between adjacent contacts of mated and unmated connector assemblies.
3.1.3	Low Level Contact Resistance	30 mΩ maximum initial for the Power (VBUS) and Ground(GND) contacts and 50 mΩ maximum initial for all other contacts when measured at 20 mV maximum open circuit at 100mA Mated contacts under test must be in a connector housing. 10 mΩ maximum change for post test LLCR Test shall be done in sequences defined In ELA 364-1000.01.	EIA 364-23B The object of this test is to detail a standard method to measure the electrical resistance across a pair of mated contacts under a low voltage/current condition Measurement to use the Kelvin 4-wite method

<table>
<tr><td>3.1.4</td><td>Contact Current Rating</td><td colspan="4">1.8A for VBUS and its corresponding GND pins (pin1 and pin4 for the USB3.0 standard-A and standard-B connectors; pin 1 and pin 5 for the USB3.0 Micro-B connector family) and at the same time 0.25A for all the other contacts minimum when measured at an ambient temperature of 25 degrees Celsius. with power applied to the contacts, the delta temperature must not exceed +30℃ degrees Celsius at any point in the USB3.0 connectors under test</td><td>EIA 364-70 Method 2
The object of this test procedure is to detail a standard method to assess the current carrying capacity of mated USB connector contacts.</td></tr>
<tr><td>3.1.5</td><td>Contact Capacitance</td><td colspan="4">2 pF maximum unmated per contact.</td><td>EIA 364-30
The object of this test is to detail a standard method to determine the capacitance between conductive elements of a USB connector.</td></tr>
<tr><td>3.1.6</td><td>Characteristic impedance</td><td colspan="4">The Differential characteristic impedance for the STP pairs should be controlled within 90±7Ω (83~~97Ω)</td><td>It should be measured with a TDR in a differential mold using a 200ps(10-90%)rise time.</td></tr>
<tr><td>3.1.7</td><td>Intra-pair skew</td><td colspan="4">The intra-pair skew for the STP pairs should be less than 15 ps per meter.</td><td>It should be measured with a TDT in a differential mode using a 200ps (10-90%) rise time</td></tr>
<tr><td>3.1.8</td><td>Propagation delay skew</td><td colspan="4">100ps/cable
(maximum for full speed cable)</td><td>It should be measured with a TDT in a differential mode using a 200ps (10-90%) rise time</td></tr>
<tr><td rowspan="7">3.1.9</td><td rowspan="7">Signal pair attenuation
(Maximum)</td><td>Frequency</td><td>30AWG</td><td>28AWG</td><td>26AWG</td><td rowspan="7">1. Connect the Network Analyzer output port (port1) to the input connector on the attenuation test fixture (note).
2. Connect the series “A” plug of the cable o be tested to the test fixture, leaving the other end open-circuited.
3. Calibrate the network analyzer and fixture using the appropriate calibration standards over the desired frequency range.</td></tr>
<tr><td>0.625GHZ</td><td>1.4dB/m</td><td>1.20 dB/m</td><td>TBD</td></tr>
<tr><td>1.25 GHZ</td><td>2.0 dB/m</td><td>1.80 dB/m</td><td>TBD</td></tr>
<tr><td>2.50 GHZ</td><td>3.0 dB/m</td><td>2.65 dB/m</td><td>TBD</td></tr>
<tr><td>5.00 GHZ</td><td>4.6 dB/m</td><td>4.35 dB/m</td><td>TBD</td></tr>
<tr><td>7.50 GHZ</td><td>TBD</td><td>TBD dB/m</td><td>TBD</td></tr>
</table>

3.1.10	Differential return loss	The differential returnloss, SDD11, measures the impedance mismatch in frequency domain. The differential return loss defined by following vertices: (100 MHz,-15dB), (f0/2,-15 dB), (f0,-12 dB), (2* f0, -5dB) and3 *f0,-2dB), where f0=2. 5GHz being the fundamental frequency. This is shown in Figure3.1.10;	EIA-360-108
		The measured differential return loss of a mated cable assembly must be below or on the differential return loss envelope	
3.1.11	Near-end crosstalk	The differential crosstalk measure the unwanted coupling Between differential pairs. Since the TX pair is right next to the RX pair for USB 3.0,only the differential near-end crosstalk(DDNEXT) is specified, as shown in Figure3.1.12 The mated cable assembly meets the DDNEXT requirement if its DDENXT is below or on the shown in Figuere3.1.12; the vertices that defines the DDNEXT limits (100 MHz, -32 dB), (f0,-32), (2*f0,-25 dB)and (3*f0, -25dB)	EIA-360-90
3.1.12	Differential crosstalk between USB3.0 and USB2.0 pairs	The differential near-end and far-end crosstalk between the USB2.0 pairs(D+/D-) and the USB3.0 Pairs (SSTX+/ SSTX -or SSRX+/SSRX-)shall be managed to be less than the limit shown in Figure 3.1.13; the vertices that defines the DDNEXT are: (100 MHz, -23dB), (f0,- 23dB) , (2*f0,-15dB) and (3*f0,-15 dB). This requirement applies only to the USB3.0 standard -A connector	EIA-360-90
3.1.13	Differential to common mode conversion	Since the common mode current is directly responsible for EM emission, limiting the differentia -To-common- mode conversion,SCD12,will limit EM Emission Figure 3-5illustrates the SCD12 requirement; a mated cable assembly passes the SCD12 requirement if its SCD12 is less than or equal to -20dB across the frequency range shown in Figure3.1.14	
3.2. Mechanical Performance			

3.2.1	Insertion Force	35 Newtons maximum at maximum rate of 12.5 mm(0.492”) per minute.	EIA 364-13 The object of this test is to detail a standard method for determining the mechanical forces required for inserting a USB connector.
3.2.2	Extraction Force	10 Newtons minimum at maximum rate of 12.5 mm(0.492”) per minute.	EIA 364-13 The object of this test is to detail a standard method for determining the mechanical forces required for extracting a USB connector.
3.2.3	Durability	Standard-A,Standard-B and Powered-B series: Standard Durability Class:1500 cycles High Durability Class:5000 cycles Micro Connector Family:10,000 cycles Cycle rate of 200 cycles per hour manually or 500 maximum.	EIA 364-09 The object of this test procedure is to detail a uniform test method for determining the effects caused by subjecting a USB connector to the conditioning action of insertion and extraction, simulating the expected life of the connectors. Durability cycling with a gauge is intended only to produce mechanical stress. Durability performed with mating components is intended to produce both mechanical and wear stress.
3.2.4	Cable pull-out	Subject the cable assembly to a 50N axial load for a min of one minute while clamping one end of the cable plug. No physical damage.	EIA 364-38 Test condition A
3.2.5	Physical shock	No discontinuities of 1*u*s or Longer duration. See Note1.	EIA364–27 Condition H. Subject mated connectors to 30 Gs half-sine shock' pulses of 11 ms duration. Three shocks in each direction applied along three mutually perpendicular planes 18 total shocks. See Figure C first test setup.
3.2.6	Peel strength	Minimum 150N when a soldered receptacle is pulled up from PCB in the vertical direction. No visible physical damages.	
3.2.7	Wrenching strength	(1) No plug receptacle damage:0-25N (2) The plug can be damaged, but in such a way that the receptacle does not sustain damage:25-50N	
3.2.8	Lead co-planarity	Co-planarity of all SMT leads shall be within 0.08mm range	

3.2.9	Random Vibration	No discontinuities of 1 υs or longer duration when mated USB connectors are subjected to 5.35 Gs RMS. 15 minutes in each of three mutually perpendicular planes.	EIA 364-28 Test Condition V Test Letter A This test procedure is applicable to USB connectors that may, in service, be subjected to conditions involving vibration. Whether a USB connector has to function during vibration or merely to survive conditions of vibration should be clearly stated by the detailed product specification. In either case, the relevant specification should always prescribe the acceptable performance tolerances.
3.3. Environment Performance			
3.3.1	Thermal shock	See Note1	EIA 364 – 32 Tests Condition I. 10 Cycles –55℃ and +85℃, The USB connectors under test must be mated.
3.3.2	Humidity Life	See Note1	EIA 364 – 31 Condition A. Method Ш.168 Hours minimum (seven complete cycles). The connector under test must be mated.
3.3.3	Temperature life	See Note1	EIA 364 -17A-87 Condition 2 Method A. Subject mated connectors to temperature Life at 85℃ for 250 hours
3.3.4	Mixed Flowing Gas	See Note1	EIA 364-65-92 Class II, Exposures Sample condition: Un-mating Temperature: 30±1℃ Humidity: 70±2%R.H Duration:250 hours Gas Concentration: (1) Cl2: 10±3ppb (2) NO2:200±50ppb (3) H2S: 10±5 ppb (4) SO2: 100±2 ppb
3.3.5	Solderability	USB contact solder shall cover a mini-mum of 95%of the surface being im-mersed, when solder at temperature 255 ℃+/-5℃ for immersion duration 5s	EIA 364-52 The object of this test procedure is To detail a uniform test method for determining USB connector solderability. The test procedure contained herein utilizes the solder dip technique. It is not intended to test or evaluate solder cup, solder eyelet, other hand-soldered type, or SMT type terminations.
3.3.6	Salt Spray	No evidence of physical damage No rust	The connector shall be subjected to a fine mist of salt solution at a temperature of 35±2℃ for 8h continuously (salt solution concentration 5 ± 1% by weight)

3.3.7 Environmental requirements

The connector interface environmental tests shall follow EIA364-1000.01.Environmental test methodology for assessing the performance of electrical connectors and sockets used in business office applications. The test groups/sequences and durations shall be derived from the following requirements:

(1) Durability(mating/un-mating)rating of 1500,5000 or 10000 cycles

(2) Field temperature:65℃

(3) Field life:7 years

Since the connector defined has far more than 0.127mm wipe length, Test Group 6 EIA-364-1000.01 is not required. The temperature life test duration and the mixed flowing gas test duration values are derived from EIA 364-1000.01 based on the field temperature per the following.

Temperature life test temperature and duration	105° C for 120 hours
Temperature life test temperature and duration for preconditioning	105° C for 72 hours
Mixed flowing gas duration	7 days

Note1: Shall meet visual requirements, show no physical damage.

3.4. Product qualification test sequence:

Test Examination	Test Group (a)							
	1	2	3	4	5	6	7	8
	Test Sequence (b)							
Examination	1,10	1,6	1,6	1,9	1,3	1,11	1,3	1,6
Critical Dimension							2	
Insulation resistance				3,7				
DWV				4,8				
LLCR	3,7	2,5	2,5					2,5
Capacitance				2				
Mating force	2							
Un-mating force	8							
Durability	4	3	3					4
Cable pull-out	9							
Physical shock	6							
Vibration	5							
Thermal shock				5				
Humidity				6				
Temperature life		4						
Solderability					2			
Mixed Flowing Gas			4					
Salt spray								3