Doc. Number :

☐ Tentative Specification
☐ Preliminary Specification
■ Approval Specification

MODEL NO.: R270DCE
SUFFIX: E01

Customer: DIVA

APPROVED BY **SIGNATURE**

Ver. C1

Name / Title

Please return 1 copy for your confirmation with your signature and comments.

Approved By	Checked By	Prepared By
吳柏勳	陳彥宇	黃美珍

Innolux confidential for DIVA Labs internal use only

CONTENTS

1. GENERAL DESCRIPTION 5
1.1 OVERVIEW 5
1.2 GENERAL SPECIFICATIONS 5
2. MECHANICAL SPECIFICATIONS 5
3. ABSOLUTE MAXIMUM RATINGS 5
3.1 ABSOLUTE RATINGS OF ENVIRONMENT 5
3.2 ELECTRICAL ABSOLUTE RATINGS 6
3.2.1 TFT LCD MODULE 6
4. ELECTRICAL SPECIFICATIONS 7
4.1 FUNCTION BLOCK DIAGRAM 7
4.2. INTERFACE CONNECTIONS 8
4.3 ELECTRICAL CHARACTERISTICS 10
4.3.1 LCD ELETRONICS SPECIFICATION 10
4.3.2 VCC POWER DIP CONDITION 11
4.3.3 CONVERTER ELECTRICAL CHARATERISTICS 12
4.3.4 CONVERTER INPUT CONNECTOR PIN ASSIGNMENT 13
4.4 eDP INPUT DATA MAPPING TABLE 15
4.4.1 COLOR DATA INPUT ASSIGNMENT 16
4.5 DISPLAY TIMING SPECIFICATIONS 17
4.6 eDP SIGNAL SPECIFICATIONS 18
4.6.1 eDP MAIN LINK SIGNAL 18
4.6.2 eDP AUX CHANNEL SIGNAL 21
4.6.3 eDP HPD SIGNAL 21
4.7 POWER ON/OFF SEQUENCE 22
5. OPTICAL CHARACTERISTICS 23
5.1 TEST CONDITIONS 23
5.2 OPTICAL SPECIFICATIONS 23
6. RELIABILITY TEST ITEM 27
7. PACKING 28
7.1 PACKING SPECIFICATIONS 28
7.2 PACKING METHOD 28
7.3 PALLET 29
7.4 UN-PACKING METHOD 30
8. INX MODULE LABEL 31
9. PRECAUTIONS 32

Innolux confidential for DIVA Labs internal use only

9.1 ASSEMBLY AND HANDLING PRECAUTIONS 32
9.2 STORAGE PRECAUTIONS 32
9.3 OPERATION PRECAUTIONS 32
9.4 SAFETY PRECAUTIONS 32
9.5 SAFETY STANDARDS 33
9.6 OTHER 33
Appendix OUTLINE DRAWING 34

Innolux confidential for DIVA Labs internal use only

REVISION HISTORY

Version	Date	Section	Description
3.0	3rd, Sep., 2026	All	Approval Specification was issued.

Innolux confidential for DIVA Labs internal use only

1. GENERAL DESCRIPTION

1.1 OVERVIEW

R270DCE-E01 is a 27”TFT Liquid Crystal Display medical module with LED Backlight unit and 51-pins-4 lane-eDP interface. This module supports 3840 x 2160 4K UHD can display 1.07B colors (8-bit+FRC). The converter module for backlight is built-in.

1.2 GENERAL SPECIFICATIONS

Item	Specification	Unit	Note
Screen Size	27” real diagonal		
Driver Element	a-si TFT active matrix	-	-
Pixel Number	3840 x R.G.B. x 2160	pixel	-
Pixel Pitch	0.1554 (H) x 0.1554 (V)	mm	-
Pixel Arrangement	RGB Vertical stripe	-	-
Display Colors	1.07B(8bit+FRC)	color	-
Transmissive Mode	Transmissive mode / Normally black	-	-
Surface Treatment	Anti-Glare coating(Haze 25%) , Hardness 3H,	-	-
Certification	This module is UL approved and RoHs compliant	-	
Luminance, White	1000	Cd/m2	
Power Consumption	Total 74.28W @cell Max 14.28W & BL Max 60 W		(1)

Note (1) The specified power consumption: Total= cell (reference 4.3.1)+BL (reference 4.3.3)

2. MECHANICAL SPECIFICATIONS

Item		Min.	Typ.	Max.	Unit	Note
Module Size	Horizontal (H)	615.7	616.7	617.7	mm	(1)
	Vertical (V)	359.3	360.3	361.3	mm	
	Thickness (T)	21.4	22.4	23.4	mm	
Bezel Area	Horizontal	-	601.9	-	mm	
	Vertical	-	340.3	-	mm	
Active Area	Horizontal	-	596.736	-	mm	
	Vertical	-	335.664	-	mm	
Weight		2200	2320	2440	g	

Note (1) Please refer to the attached drawings for more information of front and back outline dimensions.

3. ABSOLUTE MAXIMUM RATINGS

3.1 ABSOLUTE RATINGS OF ENVIRONMENT

Item	Symbol	Value		Unit	Note
		Min.	Max.		
Storage Temperature	TST	-20	60	ºC	(1)
Operating Ambient Temperature	TOP	0	50	ºC	(1), (2)

Note (1)

(a) 90 %RH Max. (Ta <40 ºC).

(b) Wet-bulb temperature should be 39 ºC Max.

(c) No condensation.

Innolux confidential for DVA Labs internal use only

Note (2) The temperature of panel surface should be 0 ºC min. and 60 ºC max.

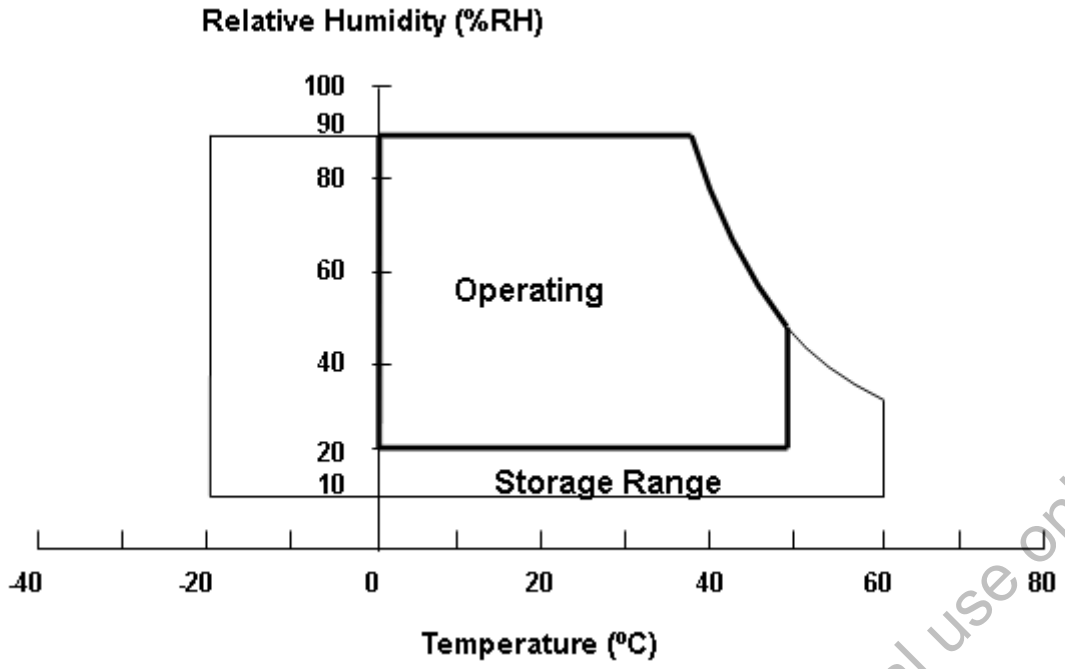

3.2 ELECTRICAL ABSOLUTE RATINGS

3.2.1 TFT LCD MODULE

Item	Symbol	Value		Unit	Note
		Min.	Max.		
Power Supply Voltage	VCCS	-0.3	13.5	V	(1)
Logic Input Voltage	V_{IN}	-0.3	3.6	V	

Note (1) Permanent damage to the device may occur if maximum values are exceeded. Function operation should be restricted to the conditions described under Normal Operating Conditions.

Note (2) Specified values are for input pin of LED light bar at Ta=25±2 ℃ (Refer to 4.3.3 and 4.3.4 for further information).

Innolux confidential for DIVA Labs internal use only

4. ELECTRICAL SPECIFICATIONS

4.1 FUNCTION BLOCK DIAGRAM

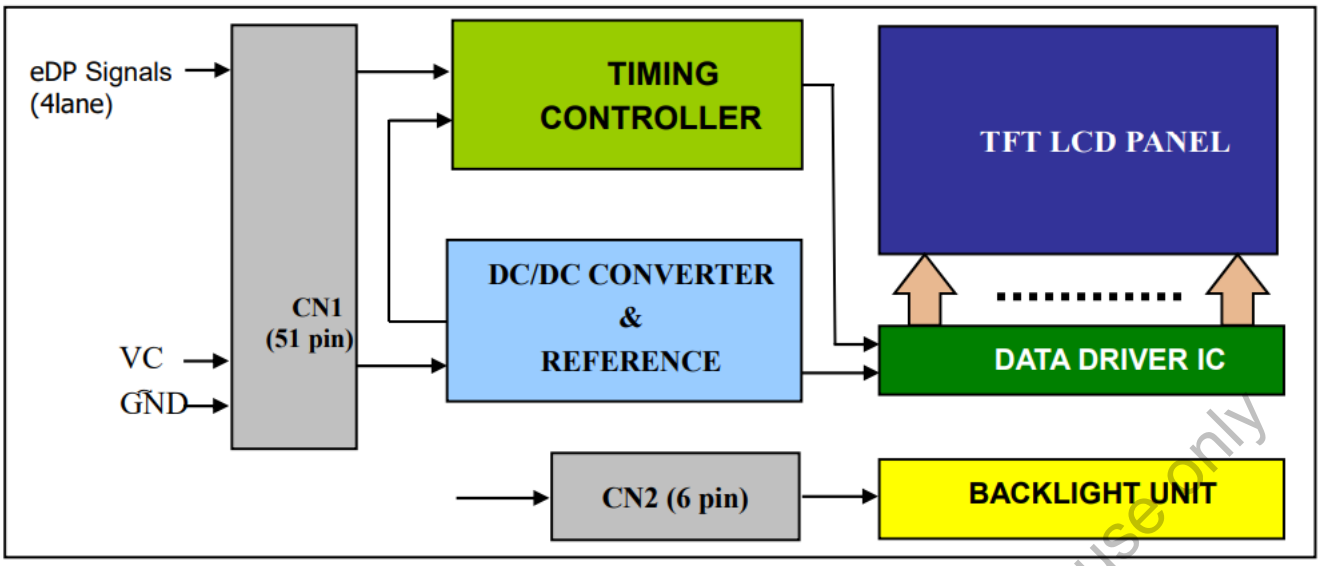

Innolux confidential for DIVA Labs internal use only

4.2. INTERFACE CONNECTIONS

PIN ASSIGNMENT(CN1：eDP 51pins)

Pin	Name	Description	Note
1	Vin	Power input (+12V)	
2	Vin	Power input (+12V)	
3	Vin	Power input (+12V)	
4	Vin	Power input (+12V)	
5	Vin	Power input (+12V)	
6	Vin	Power input (+12V)	
7	N.C.	No Connection	(1)
8	N.C.	No Connection	(1)
9	N.C.	No Connection	(1)
10	N.C.	No Connection	(1)
11	N.C.	No Connection	(1)
12	GND.	Ground	
13	N.C.	No Connection	(1)
14	N.C.	No Connection	(1)
15	N.C.	No Connection	(1)
16	GND.	Ground	
17	GND.	Ground	
18	RX0P	True Signal for Main Link 0	(4)
19	RX0N	Component Signal for Main Link 0	(4)
20	GND.	Ground	
21	RX1P	True Signal for Main Link 1	(4)
22	RX1N	Component Signal for Main Link 1	(4)
23	GND.	Ground	
24	RX2P	True Signal for Main Link 2	(4)
25	RX2N	Component Signal for Main Link 2	(4)
26	GND.	Ground	
27	RX3P	True Signal for Main Link 3	(4)
28	RX3N	Component Signal for Main Link 3	(4)
29	GND.	Ground	
30	AUXN	Component Signal for Auxiliary Channel	
31	AUXP	True Signal for Auxiliary Channel	
32	GND.	Ground	
33	HPD	Hot Plug Detect Signal	
34	GND.	Ground	
35	N.C.	No Connection	(1)
36	GND.	Ground	
37	N.C.	No Connection	(1)
38	N.C.	No Connection	(1)
39	GND.	Ground	
40	N.C.	No Connection	(1)
41	N.C.	No Connection	(1)
42	GND.	Ground	
43	N.C.	No Connection	(1)

Innolux confidential for DIVA Labs internal use only

44	N.C.	No Connection	(1)
45	GND.	Ground	
46	N.C.	No Connection	(1)
47	N.C.	No Connection	(1)
48	GND.	Ground	
49	N.C.	No Connection	(1)
50	N.C.	No Connection	(1)
51	GND.	Ground	

*Notice: There would be compatible issues if not using the indicated connectors in the matching list.

Connector Information

Note (1) Reserved for internal use. Please leave it open.

Note (2) Connector Part No.:

Item	Description
Type Part Number	P-Two 187059-51221
	FCN WF23-402-5133

Note (3) User's connector Part No:

Item	Description
Mating Wire Cable Connector Part No	JAE FI-RE5HL
	P-Two LVDS 28 type_187120-51001-3
	Hamburg FCC-W50-510001-000C or compatible

Note (4) eDP 4 Lane Main Link.

Note (5) The direction of pin assignment is shown as below

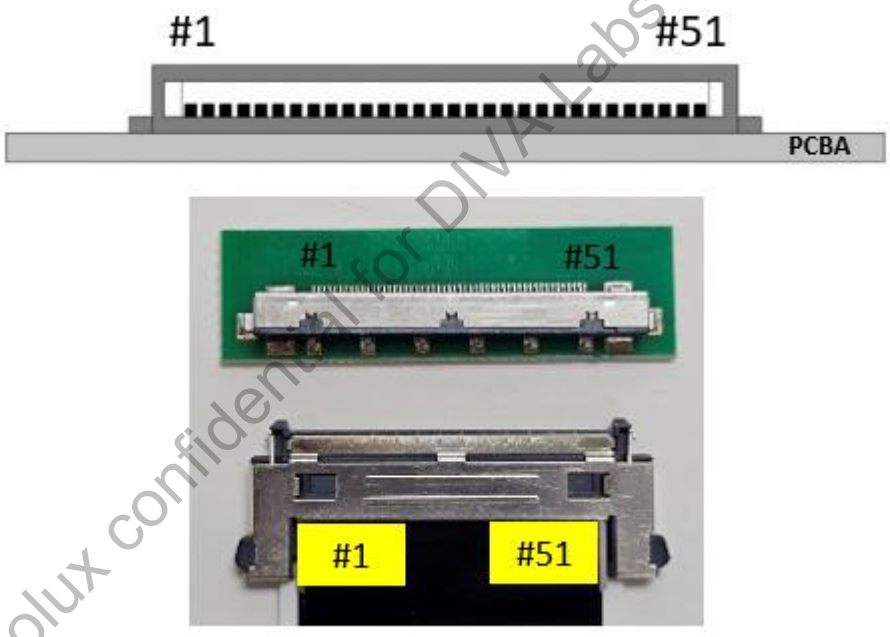

Innolux confidential for DIVA Labs internal use only

4.3 ELECTRICAL CHARACTERISTICS

4.3.1 LCD ELETRONICS SPECIFICATION

Parameter		Symbol	Value			Unit	Note
			Min.	Typ.	Max.		
Power Supply Voltage		Vcc	10.8	12	13.2	V	-
Ripple Voltage		V_{RP}	-	-	500	mV	(5)
Rush Current		I_{RUSH}	-	-	5	A	(2)
Power Supply Current	White	Icc	-	0.47	0.52	A	(3)a
	Black		-	0.44	0.48	A	(3)b
	Max Power Pattern		-	1.06	1.15	A	(3)c
Power Consumption	Typ. FR	PLCD	-	12.72	13.8	Watt	(4)
	Max. FR		-	13.08	14.28	Watt	
CMOS interface	Input high Threshold Voltage	VIH	2.7	-	3.3	V	-
	Input Low Threshold Voltage	VIL	0	-	0.7	V	-

Note (1) The ambient temperature is Ta = 25 ± 2 ºC.

Note (2) Measurement Conditions:

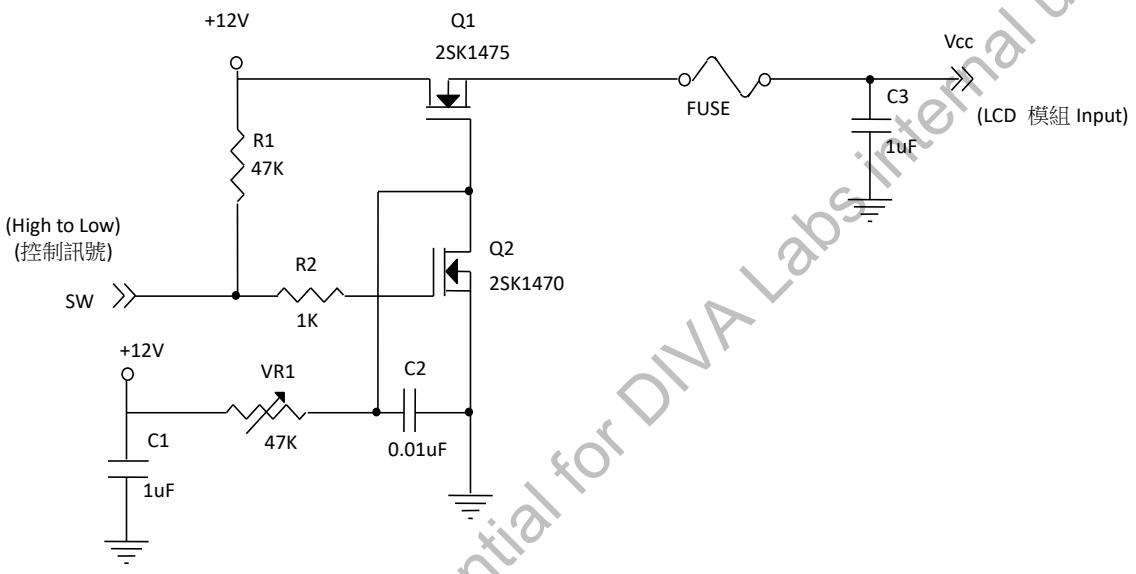

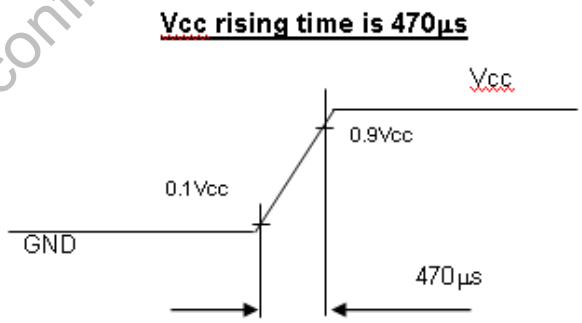

Innolux confidential for DIVA Labs internal use only

Note (3) The specified power supply current is under the conditions at Vcc = 12 V, Ta = 25 ± 2 ºC, Fr = 60Hz, whereas a power dissipation check pattern below is displayed.

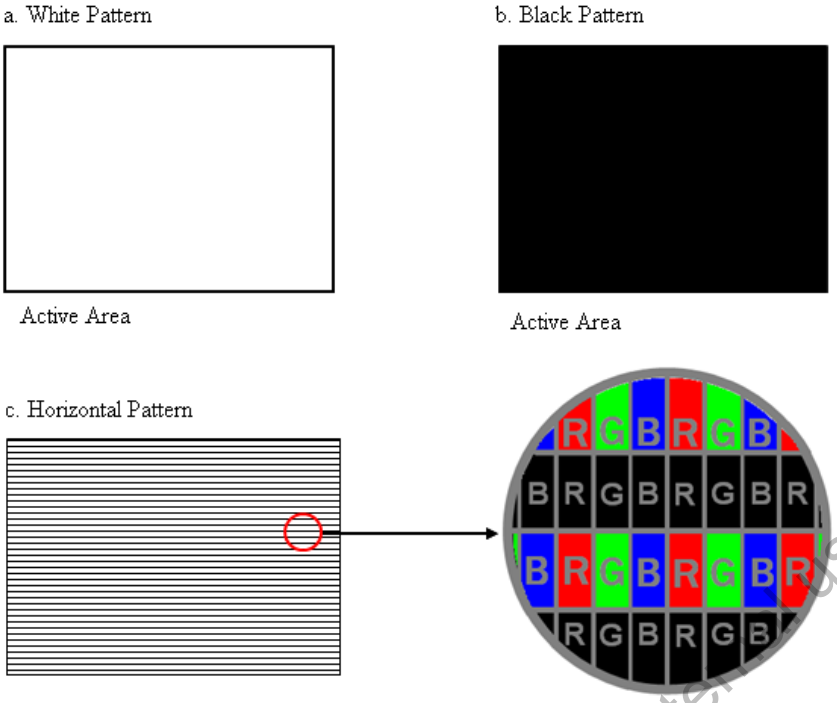

Note (4) The power consumption is specified at the pattern with the maximum current.

Note (5) Vcc =Typ. , Fr=Max. , Test pattern: White pattern

4.3.2 VCC POWER DIP CONDITION

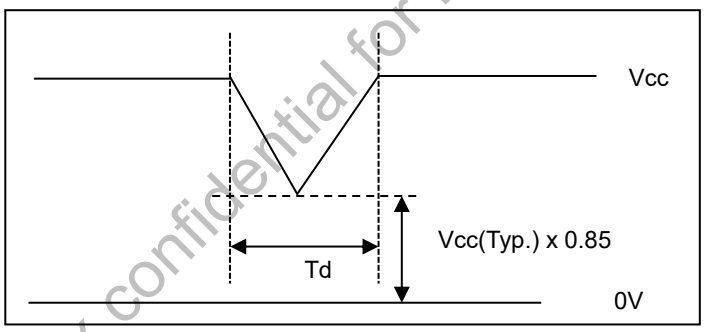

Dip condition: Td≦10ms

Innolux confidential for DIVA Labs internal use only

4.3.3 CONVERTER ELECTRICAL CHARATERISTICS

Ta =25 ± 2 ºC

Parameter		Symbol	Value			Unit	Note
			Min.	Typ.	Max.		
Converter Power Supply Voltage		V_i	22.8	24.0	25.2	V	(Duty 100%)
Converter Power Supply Current		I_i	---	2.3	2.5	A	@ Vi = 24V (Duty 100%)
Converter inrush current		I_{iRUSH}	---	---	8.0	A	@ Vi rising time=20ms (Vi=24V)
Input Power Consumption		P_j	---	55.0	60.0	W	@ Vi = 24V (Duty 100%)
BL Control Level	Backlight on	BLON	2.5	3.3	5.0	V	
	Backlight off		0	0	0.2	V	
PWM Control Level	PWM High Level	E_PWM	2.5	3.3	5.0	V	
	PWM Low Level		0	0	0.2	V	
PWM Control Duty Ratio			5		100	%	
PWM Control Frequency		f_{PWM}	150	160	170	Hz	(2),(3),(5) (Duty 100%)
PWM Noise Range		V_{Noise}	-	-	0.1	V	(5)
LED Life Time		L_{LED}	30000	-	-	Hrs	(1)

Note (1) The lifetime of LED is estimated data and defined as the time when LED packages continue to operate under the conditions at Ta = 25 ±2 ℃ until the brightness becomes ≦ 50% of its original value.

Power sequence and control signal timing are shown in the following figure

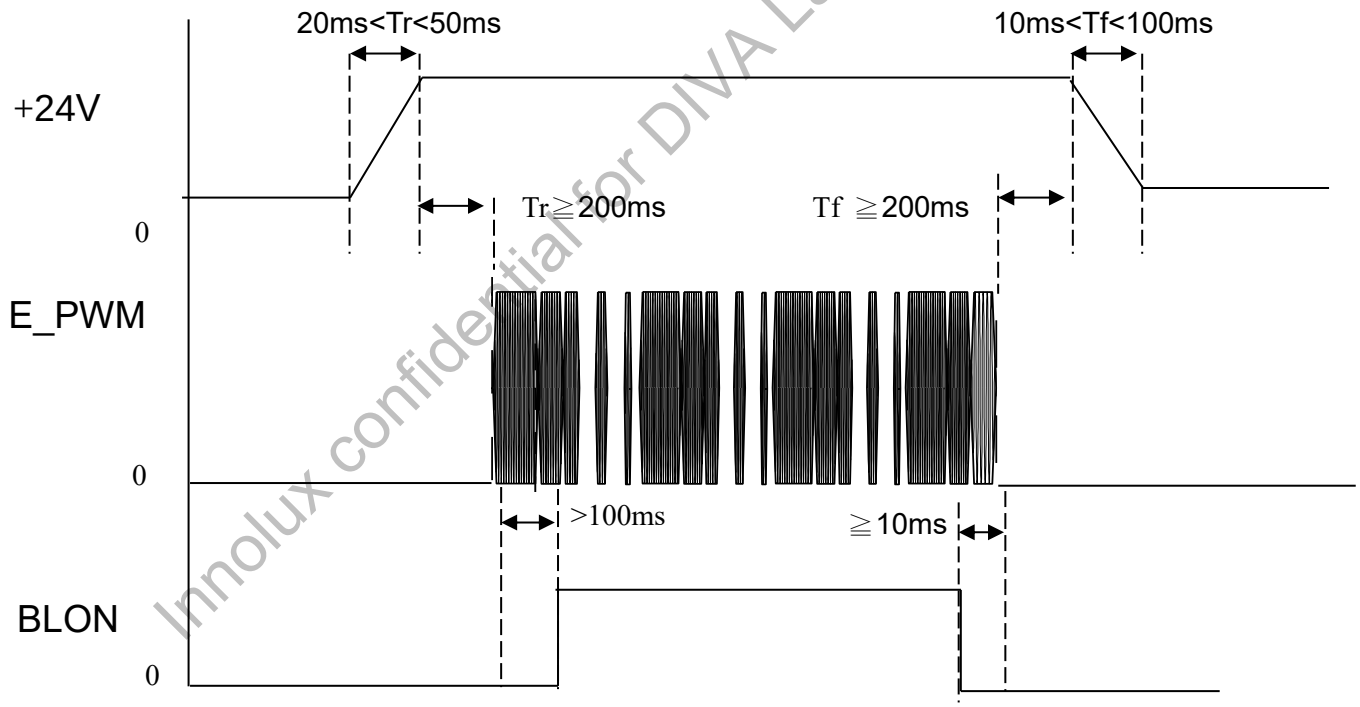

Innolux confidential for DIVA Labs internal use only

Note (2) While system is turned ON or OFF, the power sequences must follow as below descriptions

Turn ON sequence: Vi(+24V) → E_PWM signal → BLON

Turn OFF sequence: BLON → E_PWM signal → Vi(+24V)

Note (3) The Dimming signal should be valid before backlight turns on by BLON signal. It is inhibited to change the external PWM signal during backlight turn on period.

Note (4) The EPWM interface that inserts a pull up resistor to 5V in Max Duty (100%), please refers to below figure.

Note (5) EPWM signal have to input available frequency range.

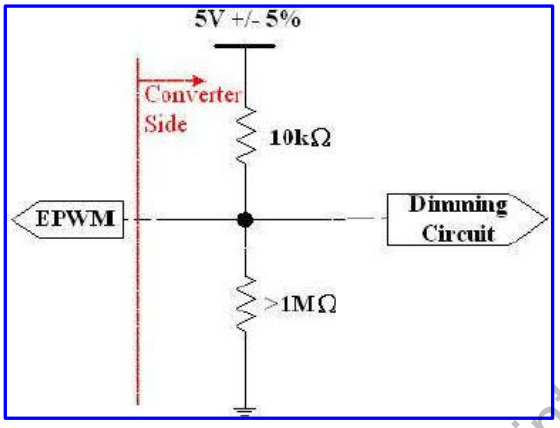

4.3.4 CONVERTER INPUT CONNECTOR PIN ASSIGNMENT

CN1 Connector: FCN JH2-D4-143N_D or equivalent

Pin number	Signal name	Feature
1	V_{BL}	+24 V
2	V_{BL}	+24 V
3	V_{BL}	+24 V
4	V_{BL}	+24 V
5	V_{BL}	+24 V
6	GND	GND
7	GND	GND
8	GND	GND
9	GND	GND
10	GND	GND
11	NC	NC
12	BLON	BL ON/OFF (ON:5V, OFF:0V)
13	NC	NC
14	E_PWM	External PWM Control for Positive (Hi Level: 5V, Lo Level: 0V)

Note (1) If Pin14 is open, E_PWM is 100% duty.

Note (2) Input connector pin order defined as follows

Innolux confidential for DIVA Labs internal use only

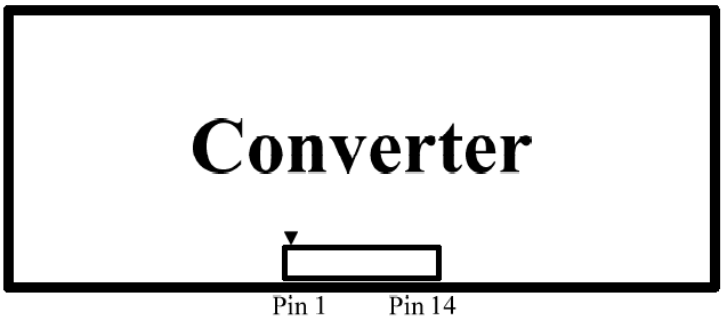

Input Connector

Innolux confidential for DIVA Labs internal use only

4.4 eDP INPUT DATA MAPPING TABLE

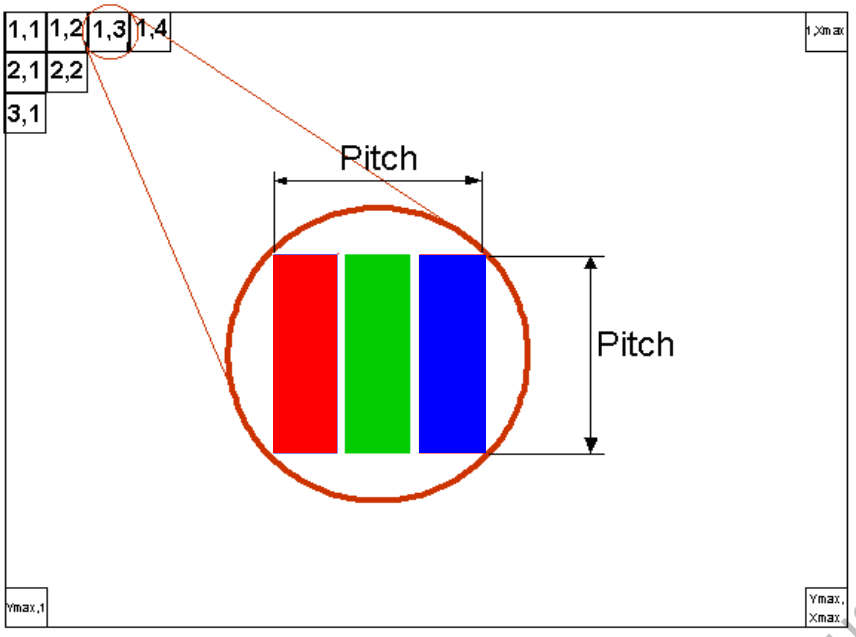

4 Lane eDP

Lane	Data Stream
Lane 0	1, 5, 9, ..., 3833, 3837
Lane 1	2, 6, 10, ..., 3834, 3838
Lane 2	3, 7, 11, ..., 3835, 3839
Lane 3	4, 8, 12, ..., 3836, 3840

4 lane 10 bits input Data format

Lane 0	Lane 1	Lane 2	Lane 3
R1-9:2	R2-9:2	R3-9:2	R4-9:2
R1-1:0 | G1-9:4	R2-1:0 | G2-9:4	R3-1:0 | G3-9:4	R4-1:0 | G4-9:4
G1-3:0 | B1-9:6	G2-3:0 | B2-9:6	G3-3:0 | B3-9:6	G4-3:0 | B4-9:6
B1-5:0 | R5-9:8	B2-5:0 | R6-9:8	B3-5:0 | R7-9:8	B4-5:0 | R8-9:8
R5-7:0	R6-7:0	R7-7:0	R8-7:0
G5-9:2	G6-9:2	G7-9:2	G8-9:2
G5-1:0 | B5-9:4	G6-1:0 | B6-9:4	G7-1:0 | B7-9:4	G8-1:0 | B8-9:4
B5-3:0 | R9-9:6	B6-3:0 | R10-9:6	B7-3:0 | R11-9:6	B8-3:0 | R12-9:6
R9-5:0 | G9-9:8	R10-5:0 | G10-9:8	R11-5:0 | G11-9:8	R12-5:0 | G12-9:8
G9-7:0	G10-7:0	G11-7:0	G12-7:0
B9-9:2	B10-9:2	B11-9:2	B12-9:2
B9-1:0 | R13-9:4	B10-1:0 | R14-9:4	B11-1:0 | R15-9:4	B12-1:0 | R16-9:4
R13-3:0 | G13-9:6	R14-3:0 | G14-9:6	R15-3:0 | G15-9:6	R16-3:0 | G16-9:6
G13-5:0 | B13-9:8	G14-5:0 | B14-9:8	G15-5:0 | B15-9:8	G16-5:0 | B16-9:8
B13-7:0	B14-7:0	B15-7:0	B16-7:0

Innolux confidential for DIVA Labs internal use only

4.4.1 COLOR DATA INPUT ASSIGNMENT

The brightness of each primary color (red, green and blue) is based on the 10-bit gray scale data input for the color. The higher the binary input, the brighter the color. The table below provides the assignment of color versus data input.

Color		Data Signal																													
		Red										Green										BLUE									
		R9	R8	G7	G6	R5	R4	R3	R2	R1	R0	G9	G8	G7	G6	G5	G4	G3	G2	G1	G0	B9	B8	B7	B6	B5	B4	B3	B2	B1	B0
Basic Colors	Black	0	0	0	0	0	0	0	0	0	0	0	0	0	0	0	0	0	0	0	0	0	0	0	0	0	0	0	0	0	0
	Red	1	1	1	1	1	1	1	1	1	1	0	0	0	0	0	0	0	0	0	0	0	0	0	0	0	0	0	0	0	0
	Green	0	0	0	0	0	0	0	0	0	0	1	1	1	1	1	1	1	1	1	1	0	0	0	0	0	0	0	0	0	0
	Blue	0	0	0	0	0	0	0	0	0	0	0	0	0	0	0	0	0	0	0	0	1	1	1	1	1	1	1	1	1	1
	Cyan	0	0	0	0	0	0	0	0	0	0	1	1	1	1	1	1	1	1	1	1	1	1	1	1	1	1	1	1	1	1
	Magenta	1	1	1	1	1	1	1		1	1	0	0	0	0	0	0	0	0	0	0	1	1	1	1	1	1	1	1	1	1
	Yellow	1	1	1	1	1	1	1	1	1	1	1	1	1	1	1	1	1	1	1	1	0	0	0	0	0	0	0	0	0	0
	White	1	1	1	1	1	1	1	1	1	1	1	1	1	1	1	1	1	1	1	1	1	1	1	1	1	1	1	1	1	1
Gray Scale Of Red	Red(0) / Dark	0	0	0	0	0	0	0	0	0	0	0	0	0	0	0	0	0	0	0	0	0	0	0	0	0	0	0	0	0	0
	Red(1)	0	0	0	0	0	0	0	0	0	1	0	0	0	0	0	0	0	0	0	0	0	0	0	0	0	0	0	0	0	0
	Red(2)	0	0	0	0	0	0	0	0	1	0	0	0	0	0	0	0	0	0	0	0	0	0	0	0	0	0	0	0	0	0
	:	:	:	:	:	:	:	:	:	:	:	:	:	:	:	:	:	:	:	:	:	:	:	:	:	:	:	:	:	:	:
	:	:	:	:	:	:	:	:	:	:	:	:	:	:	:	:	:	:	:	:	:	:	:	:	:	:	:	:	:	:	:
	Red(1021)	1	1	1	1	1	1	1	1	0	1	0	0	0	0	0	0	0	0	0	0	0	0	0	0	0	0	0	0	0	0
	Red(1022)	1	1	1	1	1	1	1	1	1	0	0	0	0	0	0	0	0	0	0	0	0	0	0	0	0	0	0	0	0	0
	Red(1023)	1	1	1	1	1	1	1	1	1	1	0	0	0	0	0	0	0	0	0	0	0	0	0	0	0	0	0	0	0	0
Gray Scale Of Green	Green(0) / Dark	0	0	0	0	0	0	0	0	0	0	0	0	0	0	0	0	0	0	0	0	0	0	0	0	0	0	0	0	0	0
	Green(1)	0	0	0	0	0	0	0	0	0	0	0	0	0	0	0	0	0	0	0	1	0	0	0	0	0	0	0	0	0	0
	Green(2)	0	0	0	0	0	0	0	0	0	0	0	0	0	0	0	0	0	0	1	0	0	0	0	0	0	0	0	0	0	0
	:	:	:	:	:	:	:	:	:	:	:	:	:	:	:	:	:	:	:	:	:	:	:	:	:	:	:	:	:	:	:
	:	:	:	:	:	:	:	:	:	:	:	:	:	:	:	:	:	:	:	:	:	:	:	:	:	:	:	:	:	:	:
	Green(1021)	0	0	0	0	0	0	0	0	0	0	1	1	1	1	1	1	1	1	0	1	0	0	0	0	0	0	0	0	0	0
	Green(1022)	0	0	0	0	0	0	0	0	0	0	1	1	1	1	1	1	1	1	1	0	0	0	0	0	0	0	0	0	0	0
	Green(1023)	0	0	0	0	0	0	0	0	0	0	1	1	1	1	1	1	1	1	1	1	0	0	0	0	0	0	0	0	0	0
Gray Scale Of Blue	Blue(0) / Dark	0	0	0	0	0	0	0	0	0	0	0	0	0	0	0	0	0	0	0	0	0	0	0	0	0	0	0	0	0	0
	Blue(1)	0	0	0	0	0	0	0	0	0	0	0	0	0	0	0	0	0	0	0	0	0	0	0	0	0	0	0	0	0	1
	Blue(2)	0	0	0	0	0	0	0	0	0	0	0	0	0	0	0	0	0	0	0	0	0	0	0	0	0	0	0	0	1	0
	:	:	:	:	:	:	:	:	:	:	:	:	:	:	:	:	:	:	:	:	:	:	:	:	:	:	:	:	:	:	:
	:	:	:	:	:	:	:	:	:	:	:	:	:	:	:	:	:	:	:	:	:	:	:	:	:	:	:	:	:	:	:
	Blue(1021)	0	0	0	0	0	0	0	0	0	0	0	0	0	0	0	0	0	0	0	0	1	1	1	1	1	1	1	1	0	1
	Blue(1022)	0	0	0	0	0	0	0	0	0	0	0	0	0	0	0	0	0	0	0	0	1	1	1	1	1	1	1	1	0	1
	Blue(1023)	0	0	0	0	0	0	0	0	0	0	0	0	0	0	0	0	0	0	0	0	1	1	1	1	1	1	1	1	1	1

Innolux confidential for DVA Labs internal use only

4.5 DISPLAY TIMING SPECIFICATIONS

The input signal timing specifications are shown as the following table and timing diagram.

Signal	Item	Symbol	Min.	Typ.	Max.	Unit	Note
eDP	Frequency	Fc	518.28	533.28	552	MHz	(1)
Vertical Display Term	Frame Rate	Fr	39	60	62	Hz	-
	Total	Tv	2219	2222	3545	Th	Tv=Tvd+Tvb
	Active Display	Tvd	2160	2160	2160	Th	-
	Blank	Tvb	59	62	1385	Th	-
Horizontal Display Term	Frequency	Fh	95	133	139	KHz	-
	Total	Th	3968	4000	5440	Tc	Th=Thd+Thb
	Active Display	Thd	3840	3840	3840	Tc	-
	Blank	Thb	128	160	1600	Tc	-

Note(1) Because this module is operated by DE only mode, Hsync and Vsync input signals are ignored.

Fc = Fr X Tv X Th,

Fh(min.)=Fc(min.)/Th(min.), Fh(typ.)=Fc(typ.)/Th(typ.), Fh(max.)=Fc(max.)/Th(min.)

Please make sure the range of pixel clock has follow the below equation and Fc, Fr, Tv , Th, Fh not allowed to get beyond the min or max spec.

Max. Fc is including spread spectrum.

INPUT SIGNAL TIMING DIAGRAM

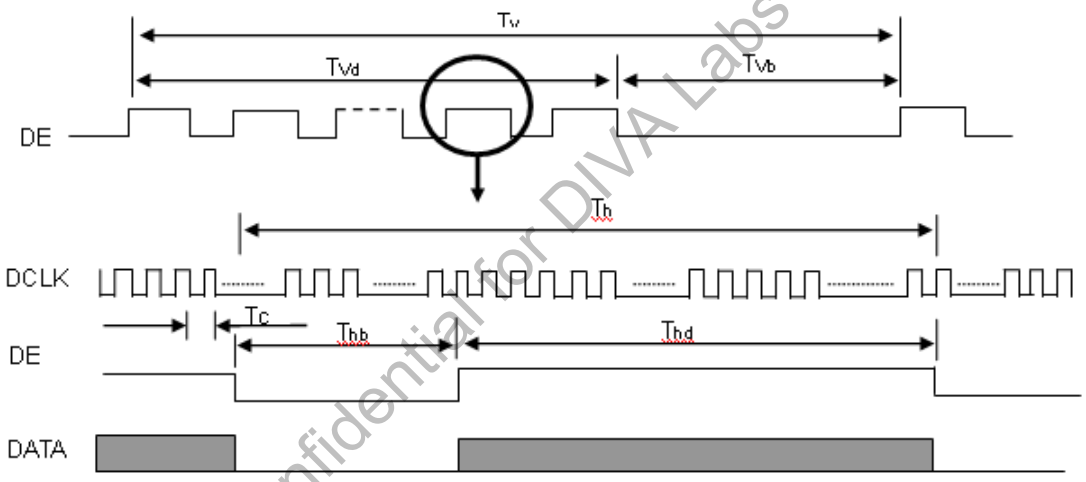

Innolux confidential for DIVA Labs internal use only

4.6 eDP SIGNAL SPECIFICATIONS

4.6.1 eDP MAIN LINK SIGNAL

Parameter	Symbol	Min	Typ	Max	Unit	Notes
Frequency for high bit rate (HBR2)	fHBR2	5.37138	5.4	5.40162	Gbps	
Spread spectrum clock (Down Spreading)	-	0	-	0.5	%	(6)
SSC modulation frequency	fssc	30	-	33	kHz	(6)
Differential peak to peak voltage at RX connector	VDIFFp-p	120	-	1320	mV	(1)
Rx input DC common mode voltage	VCM	0	-	2	V	(1)
Differential termination resistance	VRX-TERM	80	100	120	ohm	
Rx intra-pair skew at HBR2	tTOSK_Intra	-	-	50	ps	(3)
Rx inter-pair skew at HBR2	tTOSK_Inter	(4UI+500ps)	-	(4UI+500ps)	ps	(4)
Main Link AC Coupling Capacitor	C_ML_Source	75	-	200	nF	(5)

Note(1) Definition of Differential Voltage

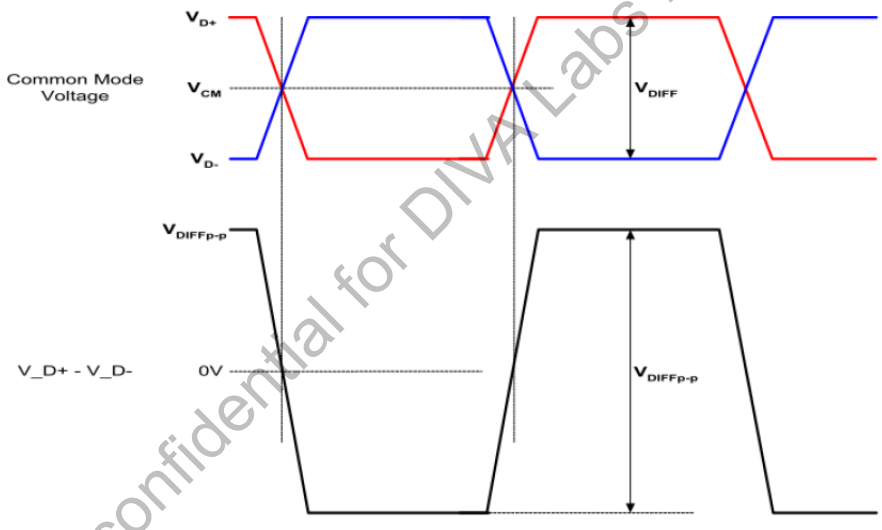

Definition of Differential Voltage and Differential Voltage Peak-to-Peak

Innolux confidential for DIVA Labs internal use only

Note(2) Main Link EYE Diagram

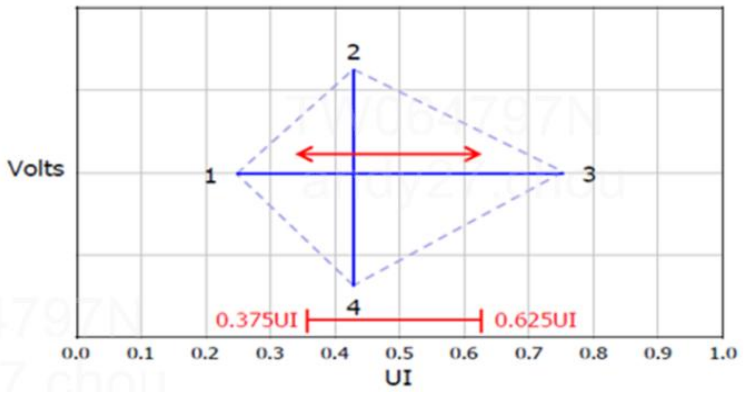

HBR2 @TP3_EQ		
Point	**Time(UI)**	**Voltage(V)**
1	Any UI locattion(x),where the Eye width is open from x to x+0.38UI	0.000
2	Any passing UI location between 0.375 and 0.625UI	0.045
3	Point 1+ 0.38UI	0.000
4	Same as Point 2	-0.045

Note(3) eDP Intra-pair skew

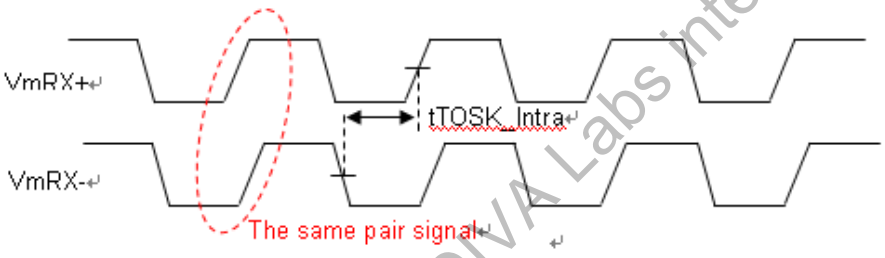

Note(4) eDP Inter-pair skew

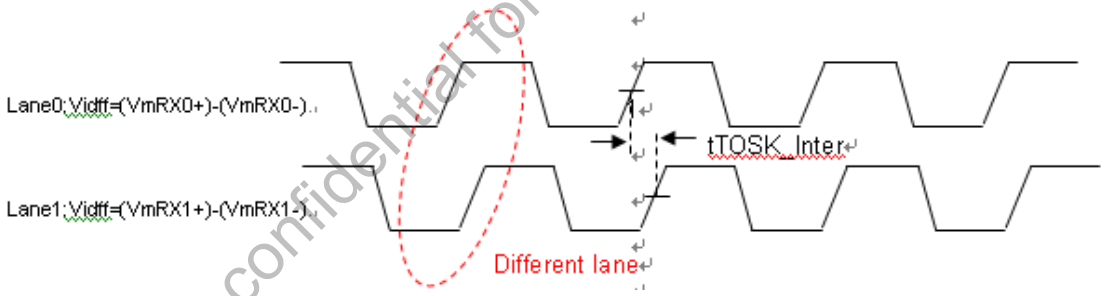

Innolux confidential for DIVA Labs internal use only

Note(5) Recommended Main Link Channel topology is as below and the Main Link AC Coupling Capacitor (C_ML_Source) should be placed on the source device

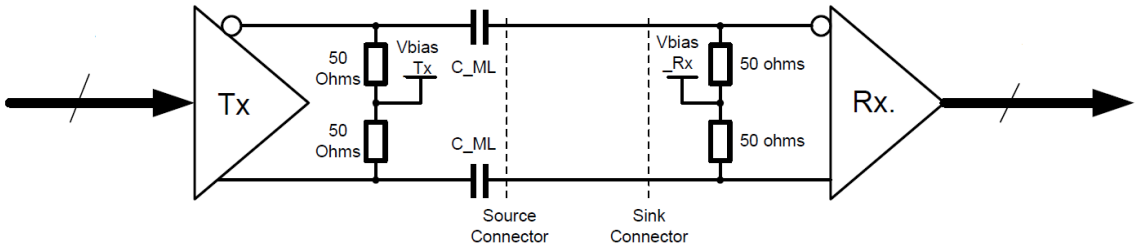

Note(6) The SSCG (Spread spectrum clock generator) is defined as below figures.

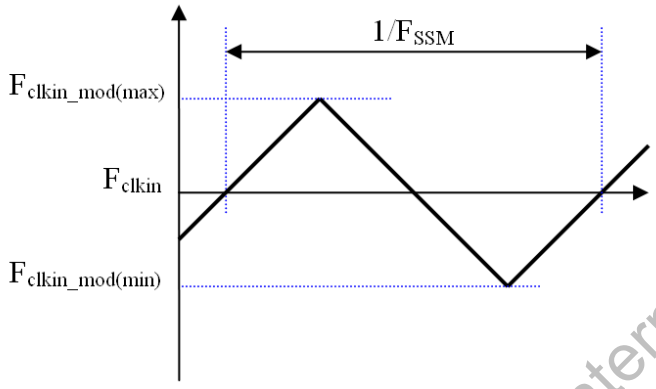

Innolux confidential for DIVA Labs internal use only

4.6.2 eDP AUX CHANNEL SIGNAL

Parameter	Symbol	Min	Typ	Max	Unit	Notes
AUX Unit Interval	UI	0.4	-	0.6	us	
AUX Jitter at Tx IC Pins	T jitter	-	-	0.04	UI	
AUX Jitter at Rx IC Pins	T jitter	-	-	0.05	UI	
AUX Peak-to-peak voltage at Connector Rx Pins	VAUX-DIFFp-p	0.27	-	1.36	V	
AUX Peak-to-peak voltage at Connector Tx Pins	VAUX-DIFFp-p	0.29	0.4	1.38	V	
AUX Differential termination resistance	AUX_dtr	80	100	120	ohm	(1)
AUX DC common mode voltage	VAUX_CM	0	-	1.2	V	
AUX AC Coupling Capacitor	C_Source_ Aux	75	-	200	nF	(1)

Notes(1) Recommended eDP AUX Channel topology is as below and the AUX AC Coupling Capacitor (C_Source _Aux) should be placed on the source device.

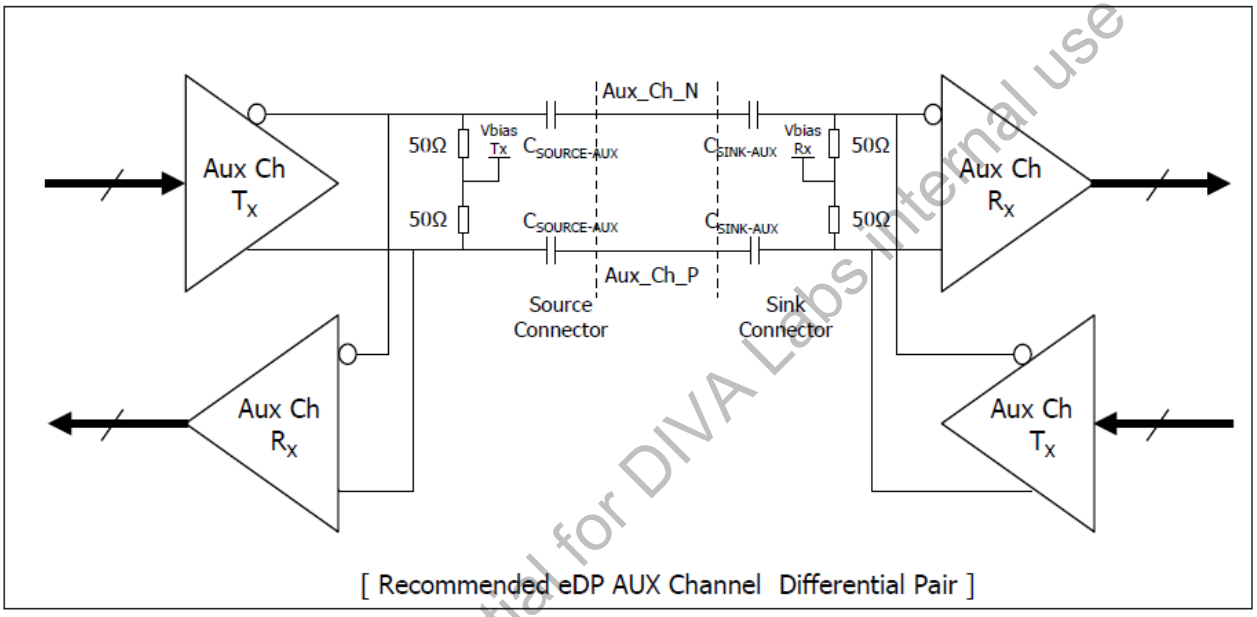

[Recommended eDP AUX Channel Differential Pair]

4.6.3 eDP HPD SIGNAL

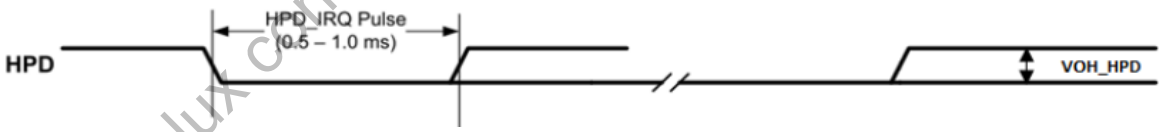

Parameter	Symbol	Min	Typ	Max	Unit
HPD Voltage	VOH_HPD	3.135	-	3.465	V
HPD_IRQ Pulse Width	HPD_IRQ	0.5	-	1	ms

Innolux Confidential for DIVA Labs internal use only

4.7 POWER ON/OFF SEQUENCE

To prevent a latch-up or DC operation of LCD module, the power on/off sequence should be as the diagram below.

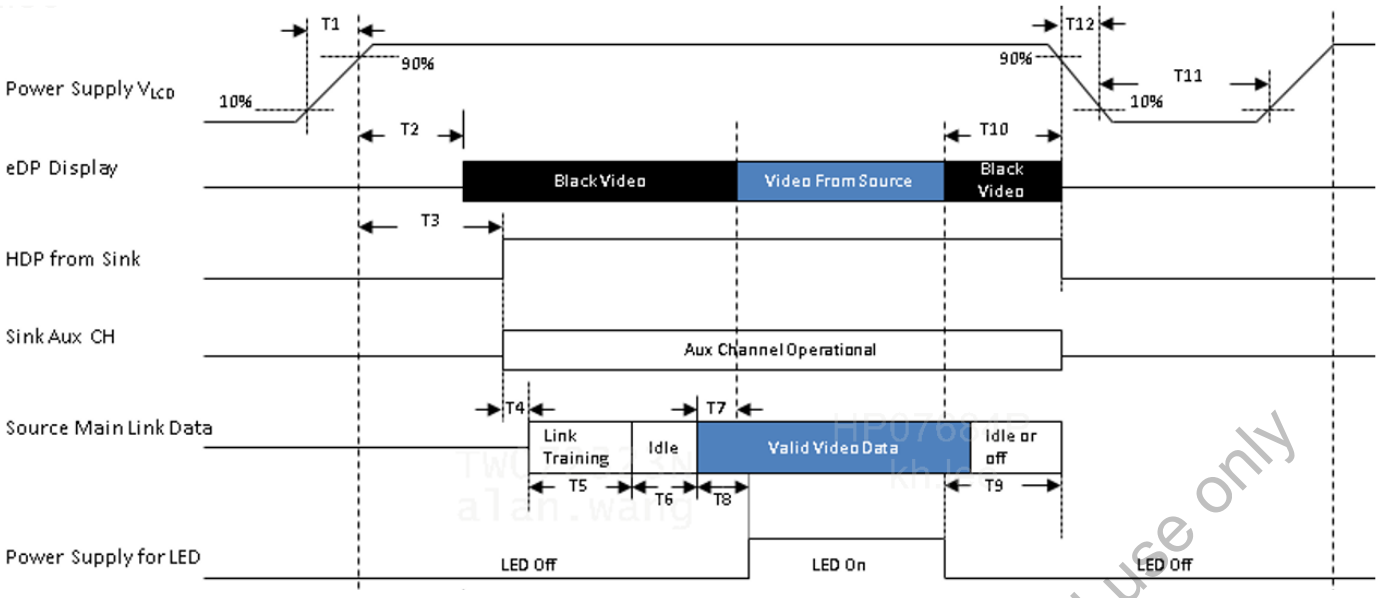

Timing Specifications:

Timing	Required By	Min	Max	Units	Notes
T1	Source	0.5	10	ms	
T2	Sink	10	200	ms	
T3	Sink	15	200	ms	
T4	Source	0	-	ms	(7)
T5	Source	0	-	ms	(7)
T6	Source	0	100	ms	
T7	Sink	0	50	ms	
T8	Source	200	-	ms	
T9	Source	200	-	ms	(8)
T10	Source	0	500	ms	
T11	Source	1000	-	ms	
T12	Source	10	100	ms	

Note (1) The supply voltage of the external system for the module input should follow the definition of Vcc.

Note (2) Please insert a display black pattern during all T9. When the backlight turns on before the LCD operation of the LCD turns off, the display may momentarily become abnormal screen and it will be no reliability concern(T9<200ms).

Note (3) In case of Vcc is in off level, please keep the level of input signals on the low or high impedance .
If T2<0,that maybe cause electrical overstress failure.

Note (4) T11 should be measured after the module has been fully discharged between power off and on period.

Note (5) Interface signal shall not be kept at high impedance when the power is on

Note (6) Vcc must decay smoothly when power-off.

Note (7) Link training duration is dependent on the customer's system.

Note (8) LED power must be turned of while video data signal is valid.

Innolux confidential for DVA Labs internal use only

5. OPTICAL CHARACTERISTICS

5.1 TEST CONDITIONS

Item	Symbol	Value	Unit
Ambient Temperature	Ta	25±2	°C
Ambient Humidity	Ha	50±10	%RH
Supply Voltage	According to typical value in "4.3 ELECTRICAL CHARACTERISTICS"		
Input Signal			
LED Light Bar Input Current Per Input Pin			
PWM Duty Ratio	D	100	%

5.2 OPTICAL SPECIFICATIONS

The relative measurement methods of optical characteristics are shown in 5.2 and all items are measured at the center point of screen except white variation. The following items should be measured under the test conditions described in 5.1 and stable environment shown in Note (5)..

Item		Symbol	Condition	Min.	Typ.	Max.	Unit	Note
Color Chromaticity (CIE 1931)	Red	R_x	θ_x=0°, θ_Y =0° CS-2000T	Typ.-0.03	0.675	Typ.+0.03	-	(1), (5)
		R_y			0.319			
	Green	G_x			0.278			
		G_y			0.628			
	Blue	B_x			0.144			
		B_y			0.054			
	White	W_x			0.313			
		W_y			0.329			
Center Luminance of White		L_C		800	1000	---	cd/m²	(4), (5)
Contrast Ratio		CR		700	1000	---	-	(2), (5)
Response Time		T_{GtG_AVE}	θ_x=0°, θ_Y =0°	---	14	---	ms	(3)
White Variation		δW_a	θ_x=0°, θ_Y =0° USB2000	---	---	1.3	--	(5), (6)
Viewing Angle		Θ_{y+}	CR ≧ 10 USB2000	80	89	---	Deg.	(1), (5)
		Θ_{y-}		80	89			
		Θ_{x+}		80	89			
		Θ_{x-}		80	89			

Innolux confidential for BOE Labs internal use only

Note (1) Definition of Viewing Angle (θx, θy):

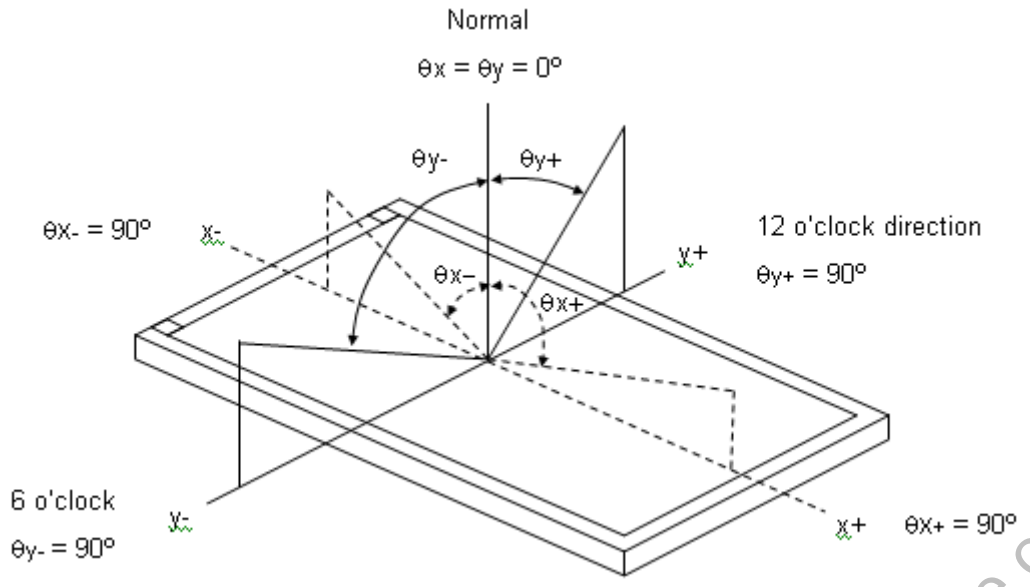

Note (2) Definition of Contrast Ratio (CR):

The contrast ratio can be calculated by the following expression.

Contrast Ratio (CR) = L255 / L0

L255: Luminance of gray level 255

L 0: Luminance of gray level 0

CR = CR (5)

CR (X) is corresponding to the Contrast Ratio of the point X at Figure in Note (4).

Note (3) Definition of Response Time (T_{GTG_AVE}):

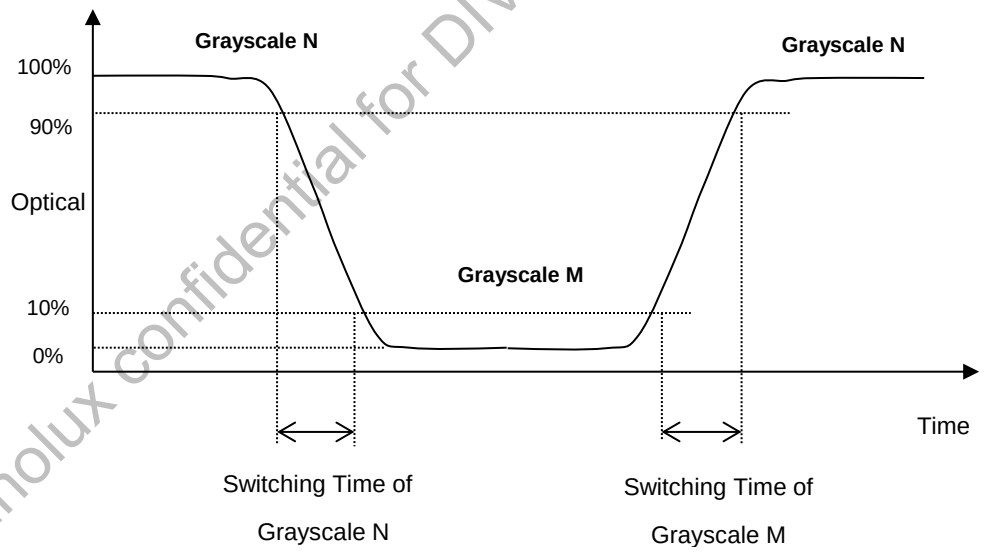

N, M (separately) : Grayscale 0, 31, 63, 95, 127, 159, 191, 223 and 255 (8 bits), 9 levels.

T_{GTG_AVE} : The total average of the T_{GTG} data which is switching time of grayscale N to M, 9x9 matrix except the same grayscales. It's measured by Innolux GTG instrument.

Innolux confidential for DIVA Labs internal use only

Note (4) Definition of Luminance of White (L_C):

Measure the luminance of gray level 255 at center point

$L_C = L(5)$

L (x) is corresponding to the luminance of the point X at the following figure.

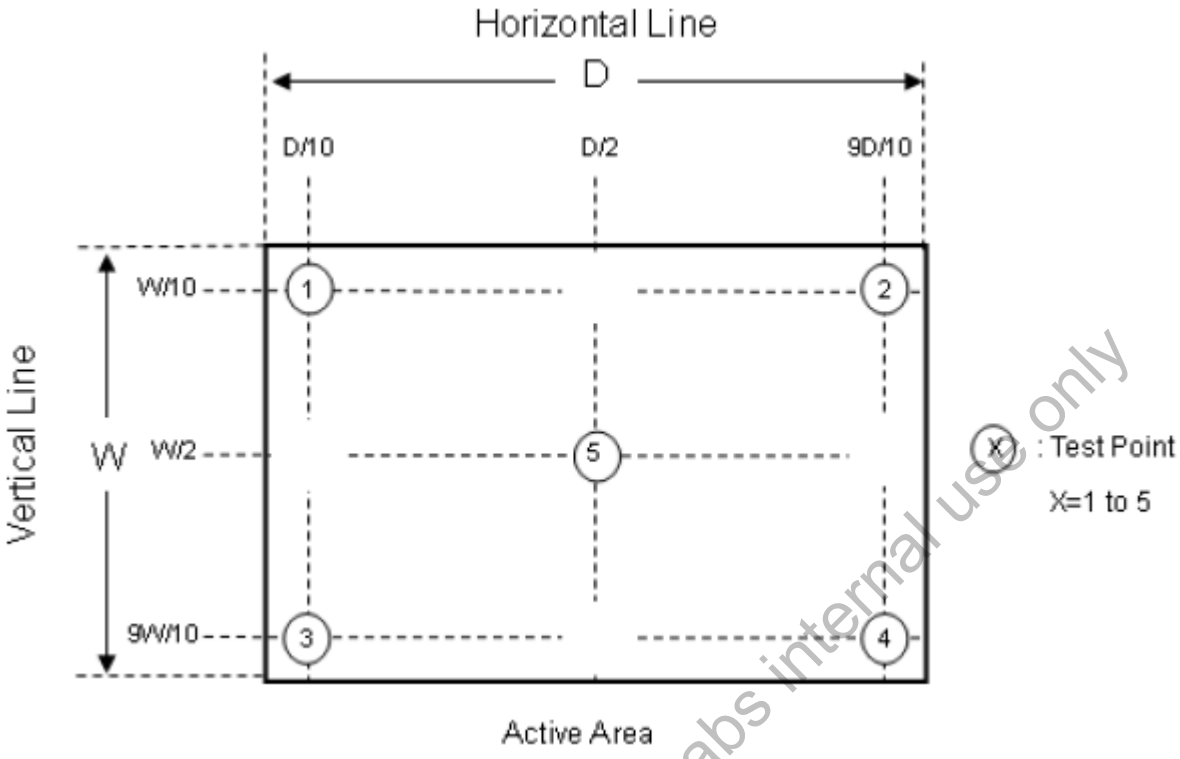

Note (5) Measurement Setup:

The LCD module should be stabilized at given temperature for 60 minutes to avoid abrupt temperature change during measuring. In order to stabilize the luminance, the measurement should be executed after lighting Backlight for 60 minutes in a windless room.

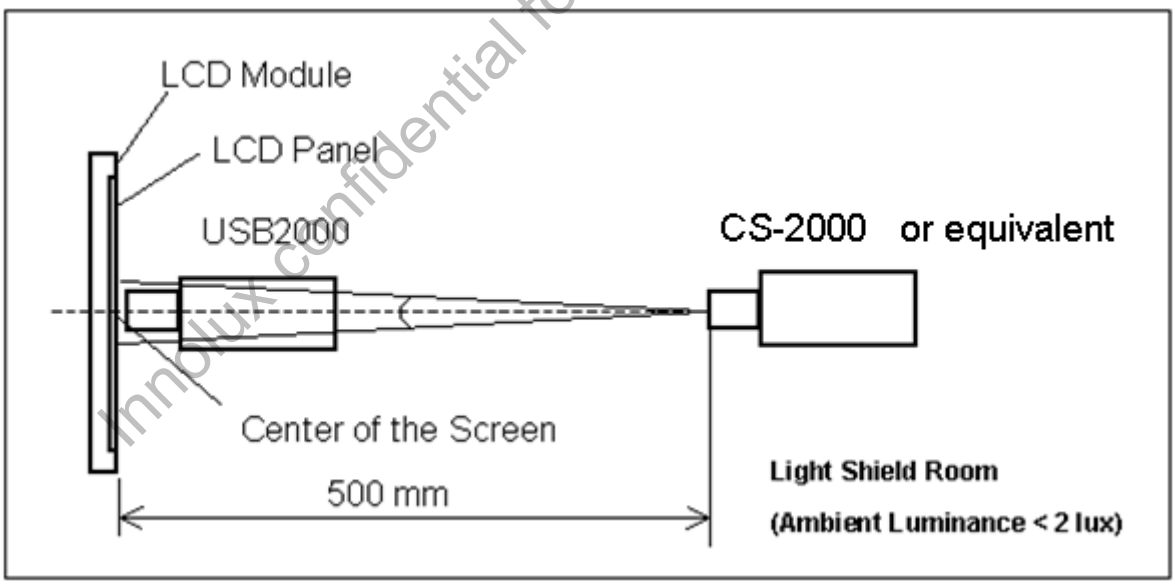

Innolux confidential for DIVA Labs internal use only

Note (6) Definition of White Variation (δW):

Measure the luminance of gray level 255 at 5 points.

$$\delta W = \frac{\text{Maximum } [L(1), L(2), L(3), L(4), L(5)]}{\text{Minimum } [L(1), L(2), L(3), L(4), L(5)]}$$

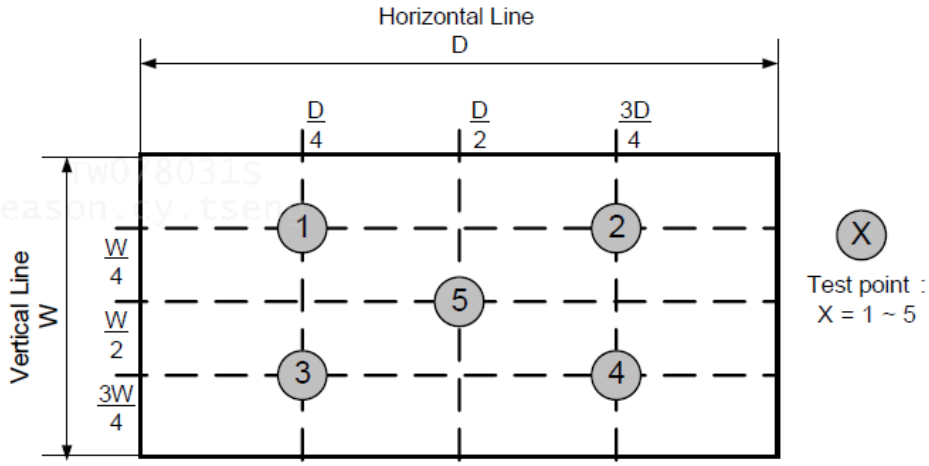

Innolux confidential for DIVA Labs internal use only

6. RELIABILITY TEST ITEM

Items	Required Condition	Note
Temperature Humidity Bias (THB)	Ta= 50℃ , 80%RH, 240hours	(1)(2)
High Temperature Operation (HTO)	Ta= 50℃ , 240hours	(1)(2)
Low Temperature Operation (LTO)	Ta= 0℃ , 240hours	(1)(2)
High Temperature Storage (HTS)	Ta= 60℃ , 240hours	(1)(2)
Low Temperature Storage (LTS)	Ta= -20℃ , 240hours	(1)(2)
Vibration Test (Non-operation)	Acceleration: 1.5 G Wave: sine Frequency: 10 - 300 Hz Sweep: 30 Minutes each Axis (X, Y, Z)	(1)(3)
Shock Test (Non-operation)	Acceleration: 50 G Wave: Half-sine Active Time: 11 ms Direction : ± X, ± Y, ± Z.(one time for each Axis)	(1)(3)
Thermal Shock Test (TST)	-20℃/30min , 60℃ / 30min , 100 cycles	(1)(2)
On/Off Test	25℃ ,On/10sec , Off /10sec , 30,000 cycles	(1)
ESD (Electro Static Discharge)	Contact Discharge: ± 8KV, 150pF(330Ω)	(1)
	Air Discharge: ± 15KV, 150pF(330Ω)	(1)
Altitude Test	Operation:10,000 ft / 24hours Non-Operation:30,000 ft / 24hours	(1)(2)

Note (1) criteria : Normal display image with no obvious non-uniformity and no line defect.

Note (2) Evaluation should be tested after storage at room temperature for more than two hour

Note (3) At testing Vibration and Shock, the fixture in holding the module has to be hard and rigid enough so that the module would not be twisted or bent by the fixture.

The fixing condition is shown as below:

At Room Temperature

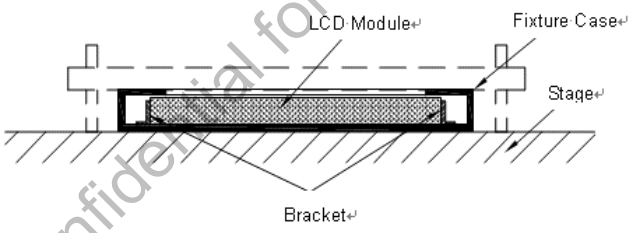

Innolux confidential for DIVA Labs internal use only

7. PACKING

7.1 PACKING SPECIFICATIONS

(1) 12 LCD modules / 1 Box

(2) Box dimensions: 735(L)*565(W)*450(H)mm

(3) Weight: approximately: 34.62 kg

7.2 PACKING METHOD

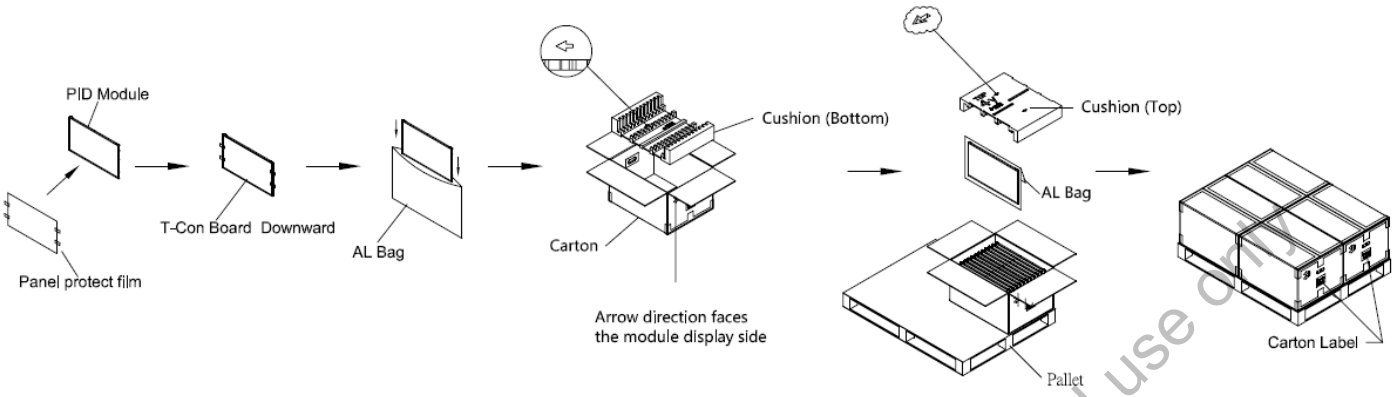

Figure. 7-1 Packing method

Innolux confidential for DIVA Labs internal use only

7.3 PALLET

Air Transportation(3 Layers)

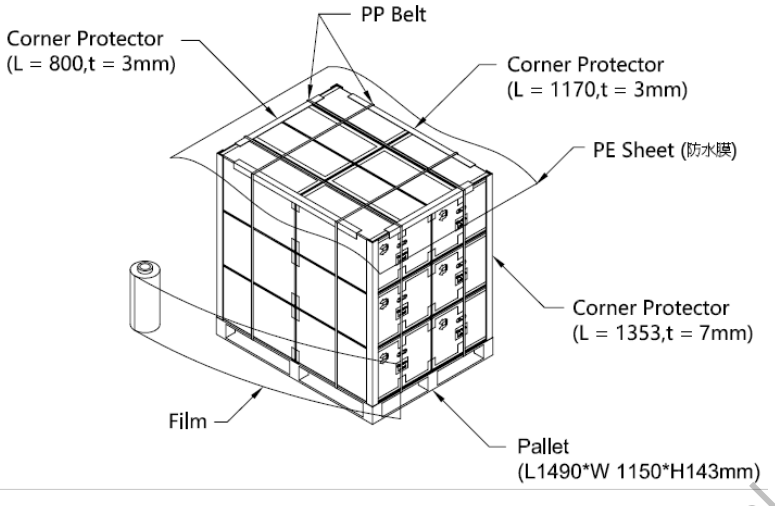

Sea / Land Transportation
(40ft HQ)
(3+2 Layers)

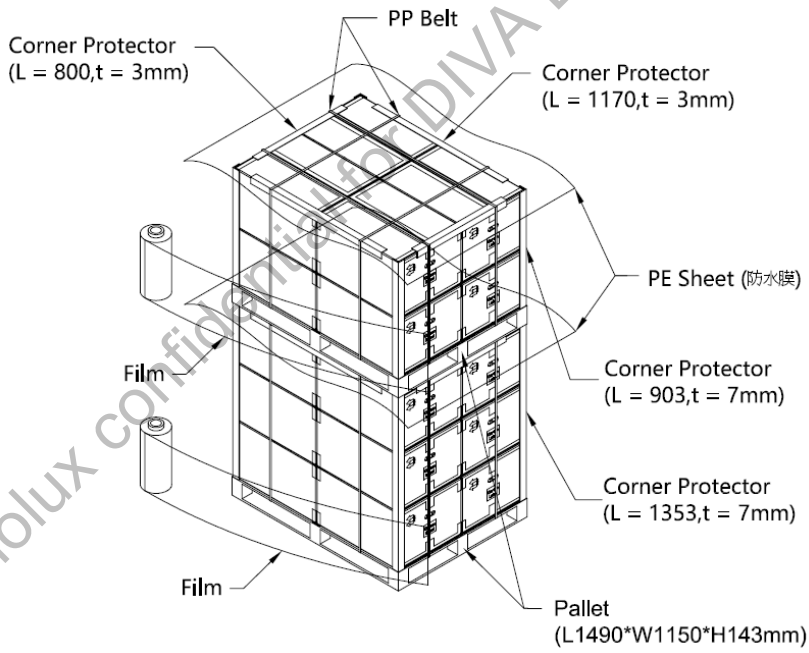

Figure. 7-2 Packing method

Innolux confidential for DIVA Labs internal use only

7.4 UN-PACKING METHOD

UN-packaging method is shown as following figures.

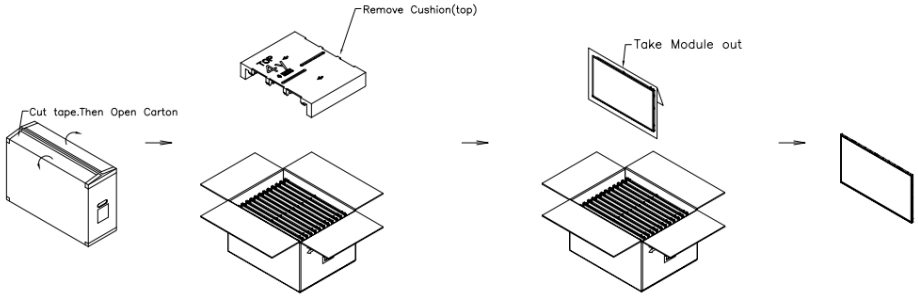

Figure. 7-3 Un-packing method

Innolux confidential for DIVA Labs internal use only

8. INX MODULE LABEL

The barcode nameplate is pasted on each module as illustration, and its definitions are as following explanation.

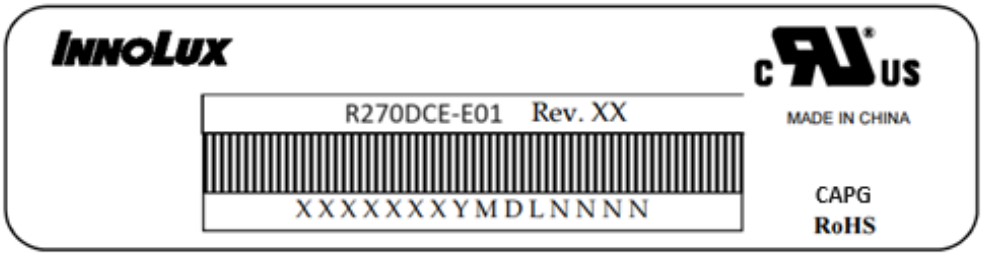

(a) Model Name: R270DCE-E01

(b) Revision: Rev. XX, for example: A0, A1… B1, B2… or C1, C2…etc.

(c) INX barcode definition:

Serial ID: XX-XX-X-XX-YMD-L-NNNN

Code	Meaning	Description
XX	INX internal use	-
XX	Revision	Cover all the change
X	INX internal use	-
XX	INX internal use	-
YMD	Year, month, day	Year: 0~9, 2010=0, 2011=1, 2012=2… Month: 1~12=1, 2, 3, ~, 9, A, B, C Day: 1~31=1, 2, 3, ~, 9, A, B, C, ~, W, X, Y, exclude I, O, and U.
L	Product line #	Line 1=1, Line 2=2, Line 3=3, …
NNNN	Serial number	Manufacturing sequence of product

Innolux confidential for DIV/Labs internal use only

9. PRECAUTIONS

9.1 ASSEMBLY AND HANDLING PRECAUTIONS

(1) Do not apply rough force such as bending or twisting to the module during assembly.

(2) To assemble or install module into user's system can be only in clean working areas. The dust and oil may cause electrical short or worsen the polarizer.

(3) It's not permitted to have pressure or impulse on the module because the LCD panel and Backlight will be damaged.

(4) Always follow the correct power sequence when LCD module is connecting and operating. This can prevent damage to the CMOS LSI chips during latch-up.

(5) Do not pull the I/F connector in or out while the module is operating.

(6) Do not disassemble the module.

(7) Use a soft dry cloth without chemicals for cleaning, because the surface of polarizer is very soft and easily scratched.

(8) It is dangerous that moisture come into or contacted the LCD module, because moisture may damage LCD module when it is operating.

(9) High temperature or humidity may reduce the performance of module. Please store LCD module within the specified storage conditions.

(10)When ambient temperature is lower than 10ºC may reduce the display quality. For example, the response time will become slowly.

9.2 STORAGE PRECAUTIONS

(1) Do not leave the module in high temperature, and high humidity for a long time. It is highly recommended to store the module with temperature from 0℃ to 35℃ and relative humidity of less than 70%

(2) Do not store the TFT-LCD module in direct sunlight

(3) The module should be stored in dark place. It is prohibited to apply sunlight or fluorescent light in storing

9.3 OPERATION PRECAUTIONS

(1) The LCD product should be operated under normal condition.

Normal condition is defined as below:

Temperature : 20±15℃

Humidity: 65±20%

Display pattern : continually changing pattern(Not stationary)

(2) If the product will be used in extreme conditions such as high temperature, high humidity, high altitude ,display pattern or operation time etc…It is strongly recommended to contact INX for application engineering advice . Otherwise, its reliability and function may not be guaranteed.

9.4 SAFETY PRECAUTIONS

(1) If the liquid crystal material leaks from the panel, it should be kept away from the eyes or mouth. In case of contact with hands, skin or clothes, it has to be washed away thoroughly with soap.

(2) After the module's end of life, it is not harmful in case of normal operation and storage.

Innolux confidential for DNA Labs internal use only

9.5 SAFETY STANDARDS

The LCD module should be certified with safety regulations as follows:

(1) UL62368-1 or updated standard.

(2) IEC62368-1 or updated standard.

9.6 OTHER

When fixed patterns are displayed for a long time, remnant image is likely to occur.

Innolux confidential for DIVA Labs internal use only

Appendix OUTLINE DRAWING

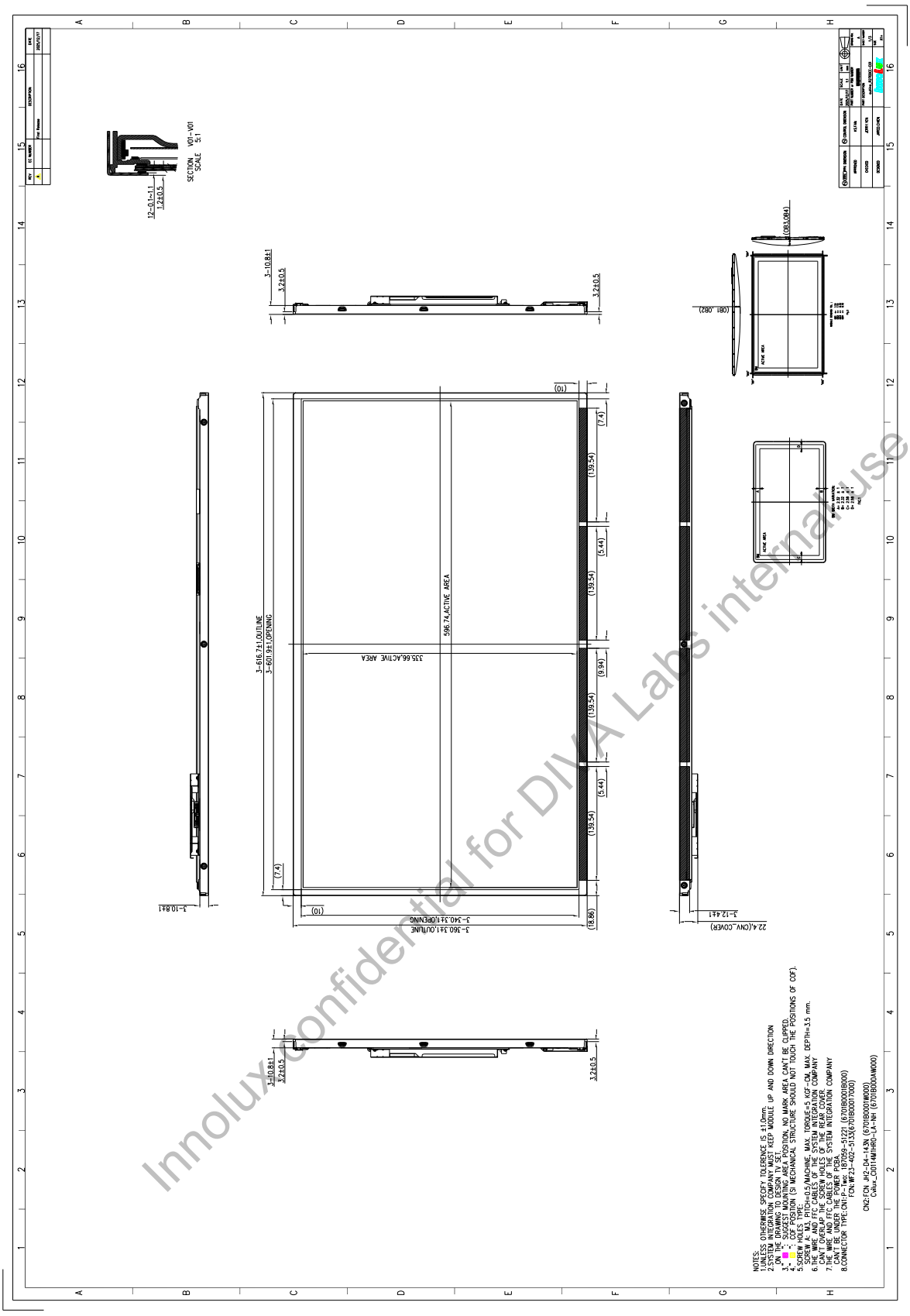

Innolux confidential for DIY A Labs internal use only

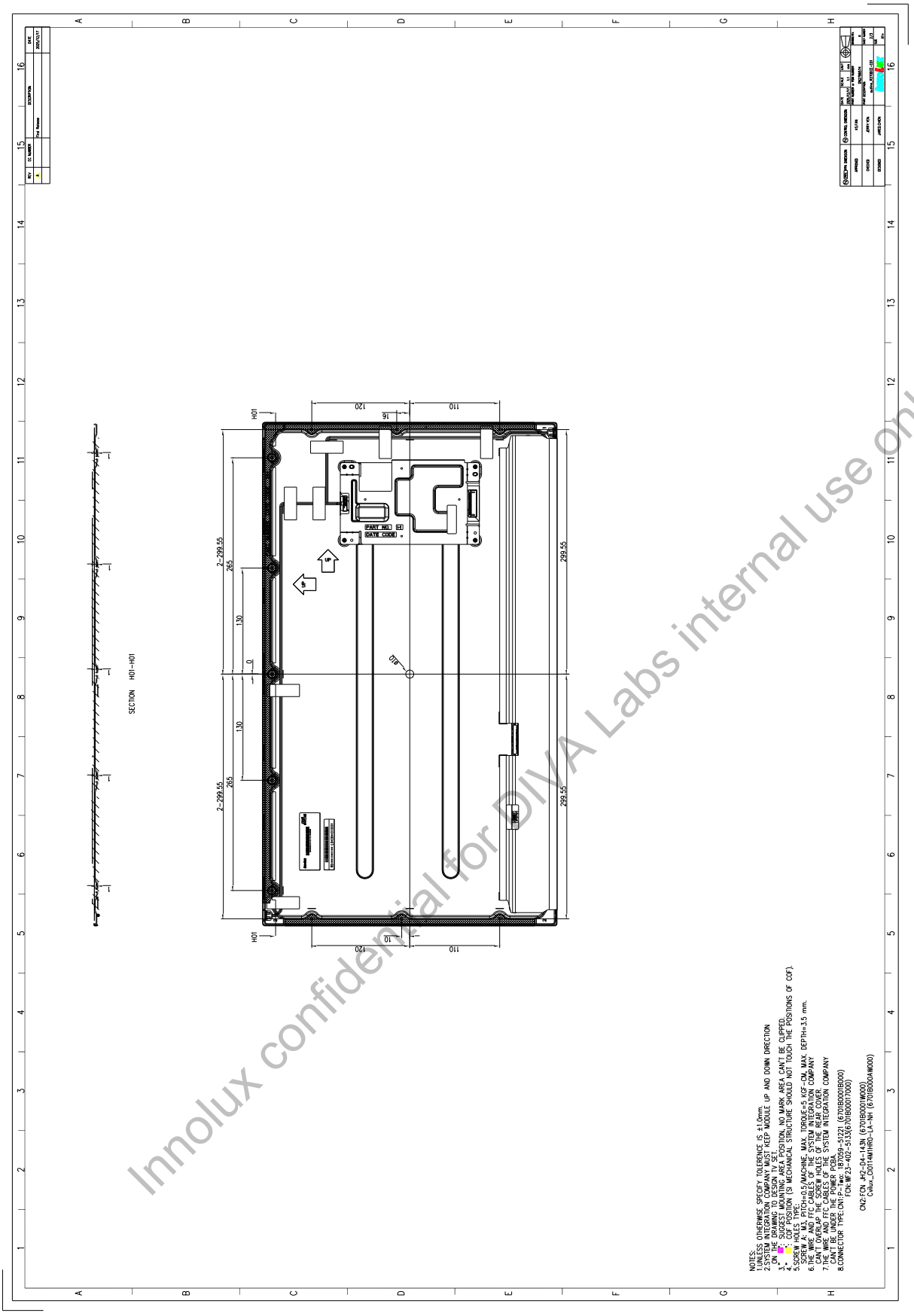
SECTION H01-H01
NOTES:
1.UNLESS OTHERWISE SPECIFY TOLERENCE IS ±1.0mm.
2.SYSTEM INTEGRATION COMPANY MUST KEEP MODULE UP AND DOWN DIRECTION
ON THE DRAWING TO DESIGN AREA.
3.* : COF POSITION (S) MECHANICAL STRUCTURE SHOULD NOT TOUCH THE POSITIONS OF COF).
4.SCREW HOLES TYPE:
5.SCREW ALL PITCH=0.5/MACHINE MAX. TORQUE=5 KGF-CM, MAX. DEPTH=3.5 mm.
6.THE WIRE AND FFC CABLES OF THE SYSTEM INTEGRATION COMPANY
CAN'T OVERLAP THE SCREW HOLES OF THE REAR COVER.
7.THE WIRE AND FFC CABLES OF THE SYSTEM INTEGRATION COMPANY
CAN'T BE UNDER THE POWER PCBA.
8.CONNECTOR TYPE:CN1:P-twc: 187059-51221 (6701B0001B000)
FCN:WF23-402-5133(6701B0007000)
CN2:FCN JAP2-04-143N (6701B0001M000)
Cvilux_C0114MHR0-LA-NH (6701B000AW000)
Innolux confidential for DIVA Labs internal use only

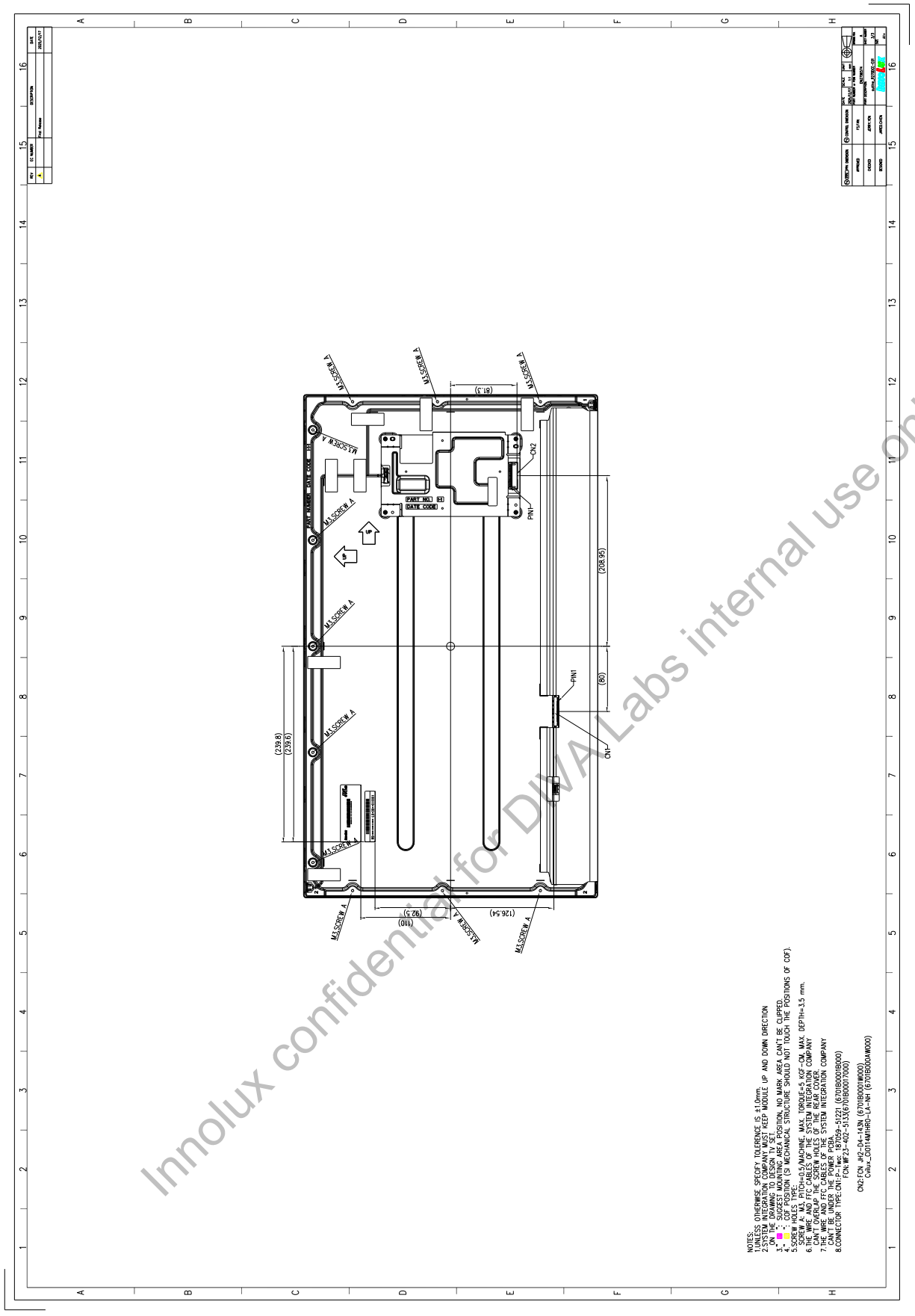
M3 SCREW A
(81.3)
CN2
PIN1
PART NO.
DATE CODE
UP
(208.95)
(60)
CN1
(239.8)
(235.6)
(126.54)
(92.5)
(110)
NOTES:
1.UNLESS OTHERWISE SPECIFY TOLERENCE IS ±1.0mm.
2.SYSTEM INTEGRATION COMPANY MUST KEEP MODULE UP AND DOWN DIRECTION
THE SAME AS DRAWING TO FIT.
3.■ : ■ : ■ :