REV	DATE	DESCRIPTION	DRAFT	APPROVED
0	Oct-05-26	INITIAL RELEASE	Butan	

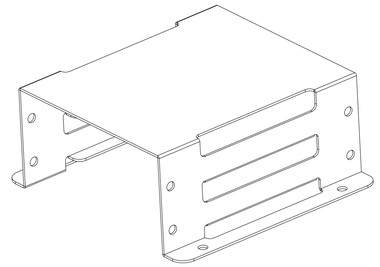

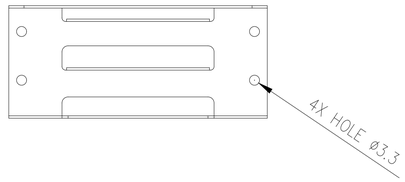



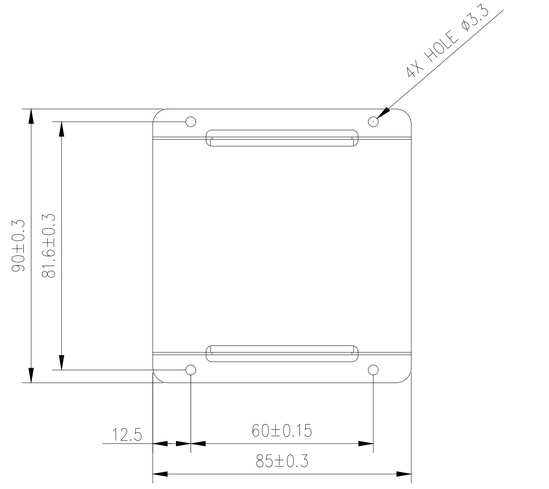

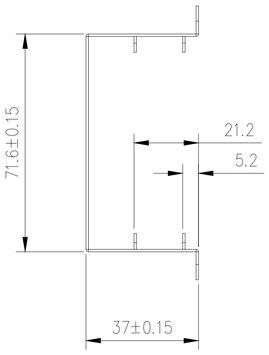

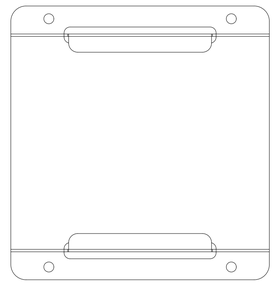

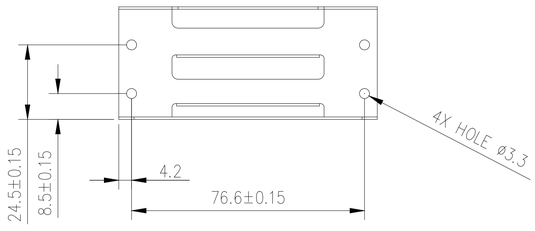

NOTE:
1. MATERIAL: JIS G3302 SGCC, ZINC COATING MASS: Z08, CHROMATE FREE.
2. THREADED TORQUE: NA
3. BURRS & SHARP EDGE(S) ALLOWED IN 0.03 MM MAX..
   BASED ON THE PRINCIPLE OF NOT HURTTING HANDS.
4. NON-DIMENSIONED GEOMETRY: SEE 3D FILE.
5. PACKING: PE BAG (EACH).
6. RoHS COMPLIANT.
7. DIVA QC INSPECTION DOCUMENT NO.: QWI-014 (Metal)

UNLESS OTHERWISE SPECIFIED ALL DIMENSIONS ARE IN MM. TOLERANCES:
.X = ± .5
.XX = ± 0.30
.XXX = ± 0.150
ANGLE = ± 1.0°
INTERPRET DIM AND TOL PER ASME Y14.5-2009

THIRD ANGLE PROJECTION

MATERIAL: SGCC	FINISH:	DIVA Laboratories. Ltd.				
DRAWN BY: Butan Oct-05-26		PART NAME: HD BRACKET				
CHECKED BY		PART NUMBER: 3MD722ME070		MFG. PART NUMBER		
APPROVED BY		MODEL NAME: 27in AIO	SIZE: A1	SCALE: 1:1	SHEET: 1 OF 1	REV 0
Creo FILE NAME: 027_277_HD_BKT	APPROVED NO.:	THIS DOCUMENT IS SUPPLIED IN CONFIDENCE. NO REPRODUCTION OF THIS DOCUMENT IN PART OR IN WHOLE OR THEREON OF THE ITEMS SHOWN MAY BE MADE WITHOUT THE COPYRIGHT OWNERS WRITTEN PERMISSION.				