*注意事項:

55",65" 素材, 噴漆之色差檢驗標準請比照 PHILIPS No. 80007

RD 已確認,如 mail 說明



蘇州佳世達 DQ9

承 認 書

客戶 : DIVA
料號 : 3MD665P2010 (M3545)
品名 : REAR COVER (L) (RUG6513AMI,BLACK)

QISDA 料號: 3J.64701.B11
QISDA 品名: RC SIDE RUG6513AMI



版本: 0
日期 : 2026.09.30

(本封面非供應商文件)

REV.	DATE	DESCRIPTION	BY	APVD
	2023-08-16	FIRST VERSION	Laslie	
	2023-12-08	ADD RIB*4, ADD ARROW SYMBOLS*6	Laslie	
	2024-02-06	RELEASE FOR PVT	Laslie	
0	2024-04-17	RELEASE FOR PRODUCTION	Laslie	
1	2024-09-27	UPDATED COLOR DESCRIPTION	Laslie	Ferris
2	2024-10-08	UPDATED COLOR DESCRIPTION	Laslie	Ferris
3	2024-11-27	SCREW HOLE MODIFY / ADD PAINTING MASK	Laslie	Ferris

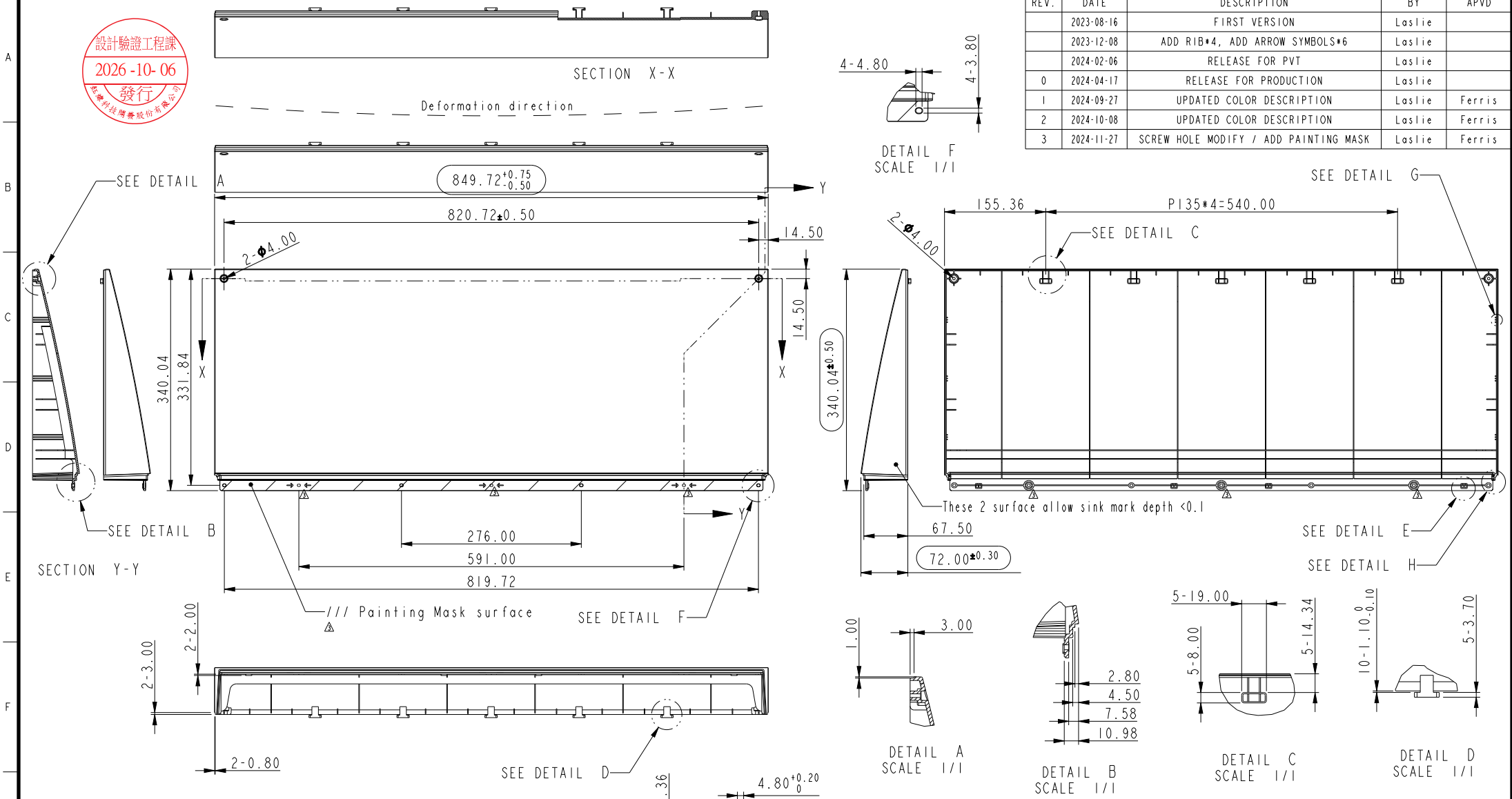

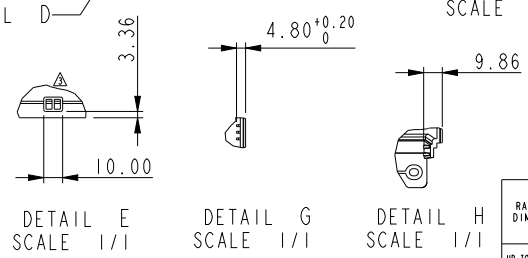

	P/N	DESCIPTION
1	3J.64701.B01	RC Tooling
2	3J.64701.B11	RC Middle

Notes:
1. Material: PC+ABS, Bayblend FR3010,FR3010 HF +, FR3010 HF + RE.
2. Resign color:Black/Deep Black, PH180007.
3. Textuer : MT-11010.
4. Finish:
   Painting: Black/Deep Black, PH180007,, Dry Thickness 25~35 um.
   Qisda Color Chip NO.:PH 180007 (Plastic).
   Gloss Level: G005 Matt.(Gloss 4°±1.5)
5. Generally Thickness:2.8 mm
6. ◯ Inspection dimension.
7. Unspecified Dimension refer to CAD Drawing file.
8. Warpage and flatness tolerance : <2.0 mm .
9. Packing : EPE PEARL BAG.
10. RoHS Compliant

MOLD NO.: #1
MOLD MAKER: D09
TOOLING FINAL: DEC'23
P/N: 3J.647

RANGE OF DIMENSION	TOLERANCE CLASS DESIGNATION f	V m	c
UP TO 30	±0.10	±0.20	±0.50
ABOVE 30~120	±0.15	±0.30	±0.80
ABOVE 120~315	±0.20	±0.50	±1.20
ABOVE 315~1000	±0.30	±0.80	±2.00
ANGLE ±1° (±1.75/100)			

THIRD ANGLE PROJECTION

UNITS: mm | SCALE: 1/2 | SHEET: 1 OF 1 | MODEL NO.:Flexvision 65"
MATERIAL: PC+ABS | TREATMENT:

DSGD by	Laslie	2023-08-16	PART NAME: REAR COVER-SIDE
CHK by	Ferris	2024-02-06	Qisda P/N: See Table
APVD by	Lalsie	2024-04-17	DIVA P/N: 3MD665P2010 REV. 2

APVD NO.: (M3545)
3D FILE NAME: 065_122_REAR_COVER_SIDE

DIVA Laboratories ,Ltd.

Qisda

Dimension Approval Sheet

Model Name:	RUG6513AMI	**Sample Approval Sheet NO.:**	
Part Name:	RC SIDE	**Material:**	PC/ABS
Part Number:	3J.64701.B11 **REV:** A0	**Color:**	BLACK
Vendor:	DQ9	**Date:**	2024.5.8

Inspection Gauge:

						Distribution	
Coordinate Measuring Machine	(CMM)	Micro Scope	(M)	Radius Gauge		R&D	
Caliper	(C)	Height Gauge	(HG)	Block Gauge		QC	
Micrometer	(M)	Projector	(P)	Visual		Purchase	
Pin Gauge	(PG)	Thickness Gauge	(T)	Lever Type Dial Test		Vendor	

Vendor Input | **Low** | **High**

If the Range is Greater Than 50% of the Total Tolerance the Cell will be RED

Item	Dim. Loc.	Gage Code	Cav. No	Spec.	Upper Tol	Lower Tol	Upper Limit	Lower Limit		Sample 1	Sample 2	Sample 3	RD Check Sample	Average	Status	Range	Disposition	Comments
1	C4	CMM	1	849.72	0.75	0.5	850.47	849.22		850.035	849.238	849.790	850.035	849.7745	OK	0.325		
2	D7	CMM	2	313.94	0.5	0.5	314.44	313.44		313.694	313.868	314.402	313.694	313.9145	OK	0.290		
3	E7	CMM	3	72	0.3	0.3	72.3	71.7		72.235	72.087	72.179	72.235	72.184	OK	0.060		
4	C4	CMM		820.72	0.5	0.5	821.22	820.22		820.329	820.372	820.507	820.329	820.38425	OK	0.073		
5	D2	CMM		340.04	0.5	0.5	340.54	339.54		339.775	339.841	339.984	339.775	339.84375	OK	0.085		
6	D2	CMM		331.84	0.5	0.5	332.34	331.34		331.547	331.646	331.769	331.547	331.62725	OK	0.091		
7	E4	CMM		276	0.5	0.5	276.5	275.5		275.903	275.931	275.821	275.903	275.8895	OK	0.041		
8	E4	CMM		591	0.8	0.8	591.8	590.2		590.874	590.736	590.659	590.874	590.78575	OK	0.092		
9	E4	CMM		819.72	0.8	0.8	820.52	818.92		819.560	819.060	819.088	819.560	819.317	OK	0.243		
10	F2	CMM		3	0.2	0.2	3.2	2.8		3.120	2.970	2.980	3.120	3.0475	OK	0.073		
11	F2	CMM		2	0.2	0.2	2.2	1.8		2.050	2.060	2.000	2.050	2.04	OK	0.023		
12	F2	CMM		0.8	0.2	0.2	1	0.6		0.880	0.830	0.820	0.880	0.8525	OK	0.028		
13	A8	CMM		4.8	0.2	0.2	5	4.6		4.687	4.810	4.890	4.687	4.7685	OK	0.086		
14	A8	CMM		3.8	0.2	0.2	4	3.6		3.720	3.790	3.760	3.720	3.7475	OK	0.029		
15	A7	CMM		14.5	0.2	0.2	14.7	14.3		14.661	14.504	14.611	14.661	14.60925	OK	0.064		
16	A7	CMM		14.5	0.2	0.2	14.7	14.3		14.664	14.399	14.356	14.664	14.52075	OK	0.144		
17	C8	CMM		4	0.5	0.5	4.5	3.5		3.920	3.950	3.960	3.920	3.9375	OK	0.018		
18	C8	CMM		155.36	0.5	0.5	155.86	154.86		155.619	155.439	155.346	155.619	155.50575	OK	0.118		
19	C10	CMM		540	0.8	0.8	540.8	539.2		539.617	539.242	539.283	539.617	539.43975	OK	0.178		
20	E7	CMM		67.5	0.3	0.3	67.8	67.2		67.715	67.736	67.630	67.715	67.699	OK	0.041		
21	F7	CMM		3	0.8	0.8	3.8	2.2		2.975	3.048	3.010	2.975	3.002	OK	0.030		
22	F7	CMM		1	0.8	0.8	1.8	0.2		1.010	0.990	0.980	1.010	0.9975	OK	0.013		
23	G6	CMM		10	0.8	0.8	10.8	9.2		9.980	9.960	9.990	9.980	9.9775	OK	0.011		
24	G6	CMM		3.36	0.2	0.2	3.56	3.16		3.298	3.330	3.323	3.298	3.31225	OK	0.014		
25	G7	CMM		4.8	0.2	0	5	4.8		4.869	4.902	4.914	4.869	4.8885	OK	0.020		
26	G8	CMM		9.86	0.2	0.2	10.06	9.66		9.802	9.768	9.864	9.802	9.809	OK	0.035		
27	F7	CMM		1	0.2	0.2	1.2	0.8		1.122	1.036	1.045	1.122	1.08125	OK	0.041		
28	F8	CMM		3	0.2	0.2	3.2	2.8		3.121	3.142	3.108	3.121	3.123	OK	0.012		
29	F9	CMM		2.8	0.2	0.2	3	2.6		2.795	2.810	2.773	2.795	2.79325	OK	0.013		
30	F9	CMM		4.5	0.2	0.2	4.7	4.3		4.476	4.617	4.472	4.476	4.51025	OK	0.062		
31	F9	CMM		7.58	0.2	0.2	7.78	7.38		7.547	7.627	7.652	7.547	7.59325	OK	0.047		
32	F9	CMM		10.98	0.2	0.2	11.18	10.78		10.963	11.038	11.055	10.963	11.00475	OK	0.042		
33	F11	CMM		19	0.2	0.2	19.2	18.8		18.990	18.940	18.930	18.990	18.9625	OK	0.028		
34	F11	CMM		8	0.2	0.2	8.2	7.8		8.020	7.890	7.870	8.020	7.95	OK	0.070		
35	F11	CMM		14.34	0.2	0.2	14.54	14.14		14.435	14.408	14.383	14.435	14.4152	OK	0.022		
36	F12	CMM		1.1	0	0.1	1.1	1		1.038	1.056	1.071	1.038	1.05075	OK	0.014		
37	F12	CMM		3.7	0.2	0.2	3.9	3.5		3.556	3.602	3.584	3.556	3.5745	OK	0.020		

Initiator:Guofeng Zhang Reviewed by :Carlos Q Chen Approve by:Laslie chen DIVA/Laslie

Tooling Trial Shoot Report

Date: 2024/3/1 Rev:1.0 Page:1 of 1

Model	RUG6513AMI	**Tooling (Styling)**	
Part No	**3J.64701.B11**	**Part Name**	RC SIDE
Sequence No	**QI230102/QP-988**	**Cavity**	**1**
Mold Maker	**DQ9**	**Molder**	**DQ9**

Mold Specification

Mold Dimension (W/O Package)				**Mold Dimension(W Package)**			
L (cm)	**W(cm)**	**H(cm)**	**Weight(Kg)**	**L (cm)**	**W(cm)**	**H(cm)**	**Weight(Kg)**

Shrinkage	**Texture**	**Ringbolt (mm)**	**Locator (mm)**	**Cavity Side Material**	**Core Side Material**	**Slider Material**

Molding Condition

Molding Machine	**1000 T**

Material	**PC/ABS FR3010 HF 901510**		**Weight**	**产品重量：1350 g，料头重量 g**	
Temperature	**Nozzle**	**Front**	**Middle**	**Rear**	
	260	**260**	**260**	**260**	
Pressure	**1st Pressure**	**2nd Pressure**	**3rd Pressure**	**4th Pressure**	**5th Pressure**
	200				
Velocity	**1st Velocity**	**2nd Velocity**	**3rd Velocity**	**4th Velocity**	**5th Velocity**
	35	**60**	**75**	**65**	**45**
Position	**1st Position**	**2nd Position**	**3rd Position**	**4th Position**	**5th Position**
	225	**215**	**190**	**55**	**0**
Holding Pressure & Velocity	**1st H/Pressure**	**2nd H/Pressure**		**1st H/Velocity**	**2nd H/Velocity**
	75	**90**		**0**	**2**
Time	**Cycle Time**	**Injection**	**Cooling**	**Others**	
	90	**10**	**35**	**45**	
Molder:		**Tooling Engineer:**		**Approved By: Jinbing JB Wang**	

苏州佳世达精密工业有限公司
包 装 规 范
PACKAGING SPECIFICATION

客户	Qisda	制程	涂装	文件编号	VSPE-SOP-****	版本	A0
材质	PC/ABS	模号	QI230102/QP-988	穴数	1	部门	工程
包装数量		6pcs		工位名称	包装站	页码	1/1

包装图示步骤



此边朝下放入箱内



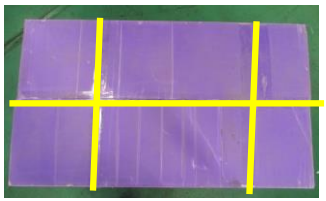



36寸盖塑箱箱底3道透明胶带封底



贴制品票区域:钙塑箱侧面右上角

机种	客户料号	DQ9料号	品名
RUG6513AMI	3J.64701.B11	3P.18842.B12	RC SIDE RUG6513AMI 侧盖

作业步骤:

1. 先将箱子底部如图所示用透明胶封3道进行封底,将钙塑箱底部放1PCS EPE隔板，在两侧边各放1PCS EPE刀卡，
2，把全检OK的产品如图所示侧朝里装入气泡袋，袋口折向公模面，产品较薄侧朝下朝同一方向放置于刀卡内，
3，一箱装6PCS,
4，装满一箱后在最上层放1pcsEPE隔板，
5.用透明胶带将制品票贴覆于胶箱侧面右上角处(制品票上、下都须用胶带粘贴).每装完一箱贴一张制品票。

项目	序	材料名称	材料规格	材质	用量	注意事项
包装材料	1	36寸盖塑箱	940*540*520	PP	1/6	1.胶箱请勿倒立.
	2	气泡袋 VS.4B046.001	BAG LDPE 1050*700mm	EPE	6/6	2.胶箱请勿淋雨，暴晒.
	3	36寸EPE隔板	935*535*6	EPE	2/6	3.在贴标签时，请将旧标签撕掉.
	4	EPE刀卡	540*375*100	EPE	2/6	4.请将标签贴至相应位置.
						5.包规中所有使用的包材符合HSF.
替代包装材料						

版本	修改人	变更内容	变更日期	版	修改人	变更内容	变更日期

修订日期	2023/11/9	制作		批 准		核 准	

AP_GP BOM Report

Qisda P/N	3J.64701.B11
Qisda Item description	RC SIDE RUG6513AMI
Maker	Qisda Molding Factory
Maker P/N	3J.64701.B11
Create date	2024/11/30

Component type	Description	Supplier	Subpart type	Subpart Description	Subpart Supplier	Sample Description	Remark	Report No.	Test Date	Cd	Pb	Hg	Cr6+	PBBs/PBDEs	Br	Cl	Br+Cl	DIBP	DEHP	BBP	DBP	F	I	Exemptions
Ink/Paint/Pigment	水性涂料（银/红/蓝/黑/白/灰/等....）	苏州市利得威电子科技有限公司	Ink/Paint	水性涂料（银/红/蓝/黑/白/灰/等....）	苏州市利得威电子科技有限公司	混测,红色,蓝色,黑色,白色,灰色与银色液体		A2240206071101001C;A2230296530101001C	2024/04/18;2023/06/21	N.D	N.D	N.D	N.D	N.D	N.D	N.D	N.D	N.D	N.D	N.D	N.D	N.D	N.D	
Plastic Housing	FR3010HF 901510	航耀	Plastic Resin of Housing	FR3010HF 901510	航耀	黑色塑胶颗粒	航耀是Covestro(科思创)代理商	QHJ2403038802/CH;QHJ2403038801/CH	2024/04/10;2024/04/03	N.D	N.D	N.D	N.D	N.D	N.D	N.D	N.D	N.D	N.D	N.D	N.D	1570	N.D	
Summary data										N.D	N.D	N.D	N.D	N.D	N.D	N.D	N.D	N.D	N.D	N.D	N.D	1570	N.D	