新航新型包装材料（蘇州）有限公司
地址：苏州市吴中区兴吴路19 号
電話：0512-65361168（代表線）
傳真：0512-65363540

樣 品 確 認 書

客 戶：DIVA

品 名：FRU EPE FILLER (RIGHT) (RUG5513AMI)

料 號：3MD664PK170 (M3492)

規 格：EPE

日 期：2026 年 09 月 30 日

設計驗證工程課
2026 -10- 06
發行

業務經辦	品　管
邵云凤	邱 李 财



Rev.	Date	Update Description	Signed	Remark	Approve

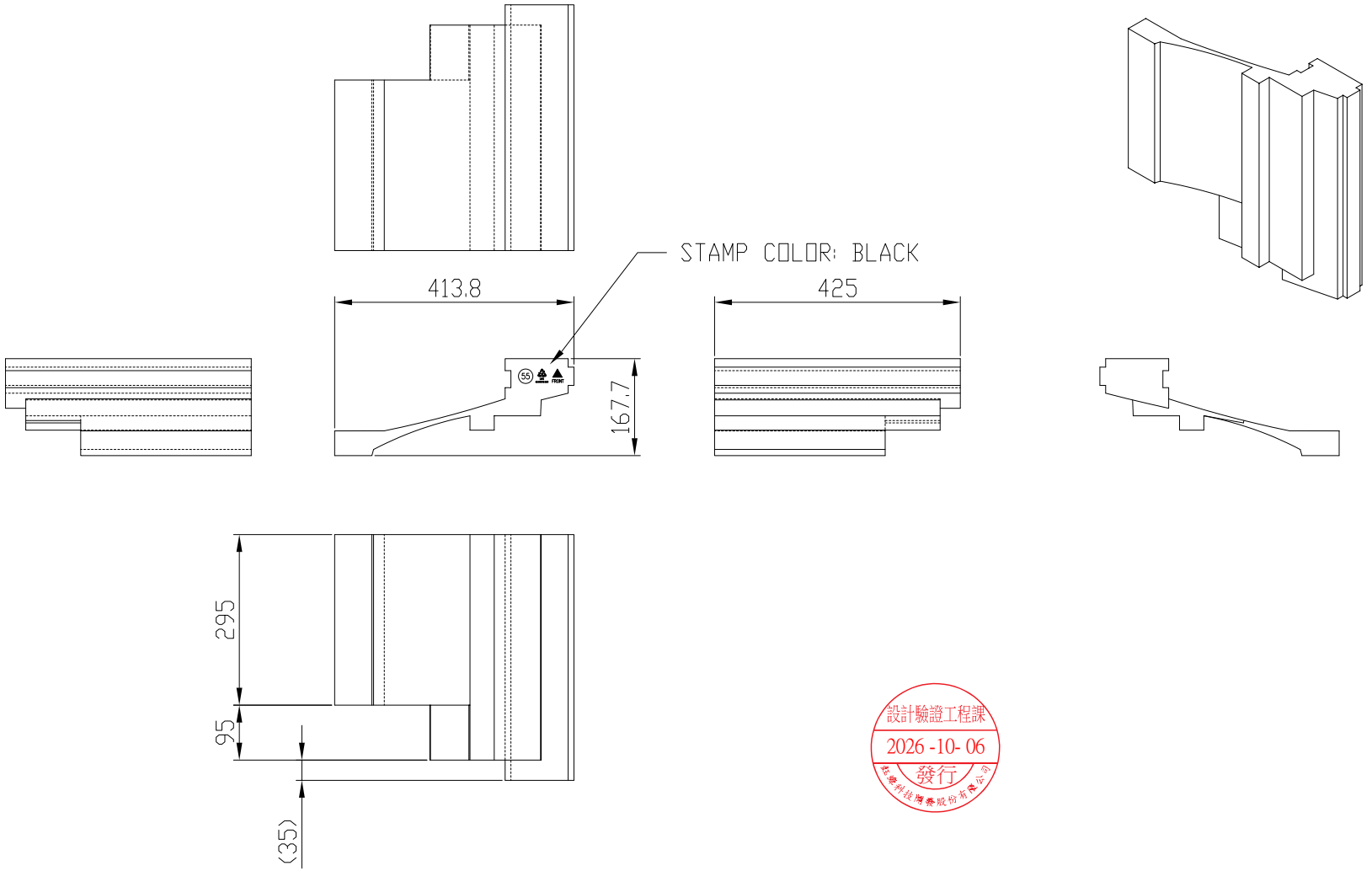

設計驗證工程課
2026 -10- 06
發行

NOTE:

ITEMS		SPEC. VALUE	REMARK
Dimension L x W x H (mm)		414*168*425MM	
Material	Weight	159±10% g	
	Color	White	
	Material	EPE	
	Density	23kg/m3	
	Tolerance	±5	

SING HOME POLYFOAM CO., LTD

Projection

Customer	DIVA
Part No.	3MD664PK170 / 4G.64616.001 (M3492)
Project No.	FRU EPE FILLER (RIGHT) (RUG5513AMI)

Date	20241106	Designer	Josh
Scale	1:1	Checked	
Unit	mm		

Qisda

Dimension Approval Sheet

Part No.：4G.64616.001	Material：EPE
Desc.：FRU EPE FILLER (RIGHT) (RUG5513AMI)	Color (or P-rocess): 白色
Model Name：RUG5513AMI	Date：2025-7-11
Vender：	Drawing Rev.： A

Inspection Gauge：

Caliper ..... (C)	Thickness Gauge ..... (T)	Gauge Block ..... (B)	
Micrometer ..... (M)	Height Gauge ..... (H)	Go. No-Go ..... (G)	
Opt. Comparator ..... (O)	Dial Indicator ..... (D)	Microscope ..... (S)	
Pin Gauge ..... (P)	Flexible Rule ..... (F)	Measuring Tape -------- (E)	

Distribution

R&D	V
QC	V
Purchase	
Vender	V

Item	Check Code	Part Portion	Specification	+Tol	-Tol	Cav. No.	Part Reading/Condition				Judge OK/NG	Remark
							Sample 1	Sample 2	Sample 3	**RD check sample**		
1	E4	413.8	+5/-5	418.8	408.8		413.8	413.8	413	413.8	OK	
2	G4	425	+5/-5	430	420		425	424	425	425	OK	
3	C7	295	+5/-5	300	290		295	295	294	295	OK	
4	C8	95	+5/-5	100	90		95	95	95	95	OK	
5	D9	35	+5/-5	40	30		35	35	35	35	OK	
6			+5/-5								OK	
7			+5/-5								OK	
8			+5/-5								OK	
9											OK	
10											OK	
11											OK	
12											OK	
13											OK	
14											OK	
15											OK	
16											OK	
17											OK	

Initiator: 徐林娜 Review By: 慈玲玉 **Approved By:** DIVA/Ferris Tsai 07/11 15:50

AP_GP BOM Report

Qisda P/N	4G.64616.001
Qisda Item description	CSN EPE-FILLER-R RUG55/65-FRU
Maker	SING HOME
Maker P/N	4G.64616.001
Create date	2025/07/18

Component type	Description	Supplier	Subpart type	Subpart Description	Subpart Supplier	Sample Description	Remark	Report No.	Test Date	Cd	Pb	Hg	Cr6+	PBBs/PBDEs	Br	Cl	Br+Cl	DIBP	DEHP	BBP	DBP	F	I	Exemptions
Cushion	EPE珍珠棉	SINGHOME	Cushion	EPE	SINGHOME	白色珍珠棉		CKGEC2400045606	2024/06/19	N.D	N.D	N.D	N.D	N.D	N.D	N.D	N.D	N.D	N.D	N.D	N.D	N.D	N.D	
Cushion	热熔胶 2106-2	日邦（台灣力森諾科材料股份有限公司）	Adhesive	热熔胶 2106-2	日邦（台灣力森諾科材料股份有限公司）	白色半透明顆粒	日邦係更名為"力森諾科	A2240096025101001E	2024/03/08	N.D	N.D	N.D	N.D	N.D	N.D	N.D	N.D	N.D	N.D	N.D	N.D	N.D	N.D	
Ink/Paint/Pigment	春光501 黑色油墨	新航	Ink/Paint used in Packing material	春光501黑色油墨	新航	春光501黑色油墨	春光為原料供應商,新航為送測商	A2180029045101006E	2018/03/20	N.D	N.D	N.D	N.D	N.D	N.D	N.D	N.D	N.D	N.D	N.D	N.D	N.D	N.D	
Summary data										N.D	N.D	N.D	N.D	N.D	N.D	N.D	N.D	N.D	N.D	N.D	N.D	N.D	N.D	