承認書編號　NO : ED-08E1054　　TO :　佳世達　台照

承 認 書

APPROVAL SHEET

FOR AL. ELECTROLYTIC CAPACITORS

承　　認 ：

APPROVED　BY:

料 號 (Customer)	料 號 (CapXon)	規 格 Description	D ψ *L	加工形式 (mm)	N.W (g)
	LY680M450Z400ECLR	68uF/ 450V	12.5x40	C+L	7.2

簽認後，請送回一份。

PLEASE RETURN US ONE COPY YOUR SIGED SPECIFICATION A FTER YOU APPROVED OF IT.

核　准 APPROVED BY: 呂 2019-9-9 晏丞

校　對 CHECKED BY: 柯 2019-9-9 美鈴

經　辦 DESIGNED BY: 林 2019-9-9 菁玫

Capxon

□

英屬維京群島商凱普松科技股份有限公司台灣分公司

CAPXON TECHNOLOGY LIMITED TAIWAN BRANCH

新北市汐止區大同路二段 157 號 5 樓

5F, NO. 157, TA TUNG ROAD, SEC. 2, SHI-CHIH DIST., NEW TAIPEI CITY, TAIWAN, R.O.C.

TEL : 886-2-86926611

FAX : 886-2-86926477 / 86926481

□

豐賓電子 (深圳) 有限公司

CAPXON ELECTRONIC (SHEN ZHEN) CO., LTD

廣東省深圳市光明新區公明鎮塘尾村塘尾工業區

TANG WEI SECTION, TANG WEI VILLAGE, GONG MING COUNTRY, NEW GUANGMING DISTRICT, SHEN ZHEN, CHINA

TEL : 86-755-27177888

FAX : 86-755-27177802　27177803

PDF 檔案使用 "pdfFactory Pro" 試用版本建立 www.pdffactory.com

PDF 檔案使用 "pdfFactory Pro" 試用版本建立 www.pdffactory.com

CAPXON ELECTRONIC INDUSTRIAL CO., LTD

FOR APPROVAL

Aluminum Electrolytic Capacitors

LY Type

1.Electric Characteristics

CAPXON P/N	Cap. (μF)	Cap Tol. (%)	Rated W.V (VDC)	Surge Volt (VDC)	Max. D.F (%)	Ripple Current 120Hz/105℃ (mA)	Max. LC (μA)	Oper. Temp. (℃)	Case Size DΦx L (mm)	USER P/N
LY680M450Z400ECLR	68	±20	450	495	20	550	524	-25~+105	12.5x40	

2.Diagram of Dimensions (Unit=mm)

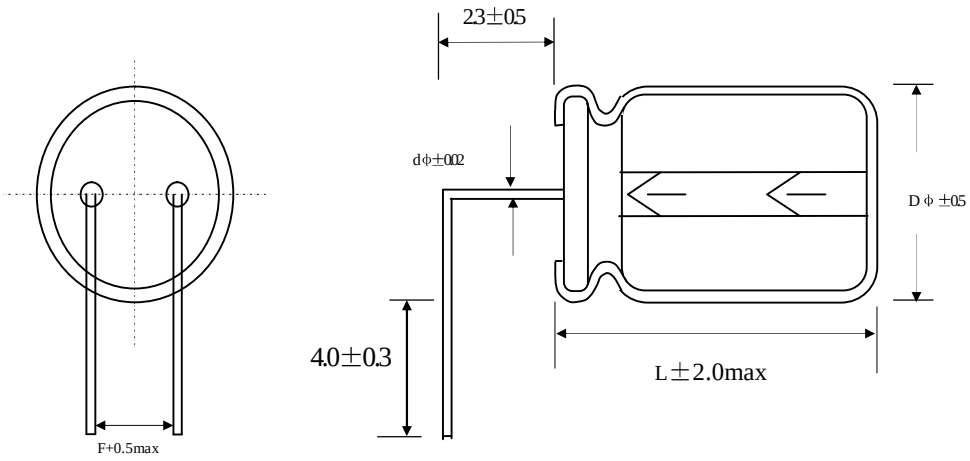

DΦ	8	10	12.5	14.5
F	3.5	5.0	5.0	7.5
dΦ	0.6	0.6	0.6	0.8
α	1.5	2.0		

3.Remarks:

3.1 Leakage Current Test: $I \leqq 3\sqrt{CV}$ (μA) for 250 to 450VDC After 5 minute whichever is greater measured with rated working voltage applied.

3.2 Operating temperature: 250～450VDC,12～150μF for -25℃～+105℃

3.3 Cap and Dissipation factor (D.F) Test: At +20℃,120Hz.

3.4 Load Life Test: At +105℃ for 5000Hrs.

3.5 Shelf Life Test: At+105℃, for 1000hrs.

3.6 Such spec. capacitors are just fit for this electric model , if you have some other application, please contact with us in advance.

PDF 檔案使用 "pdfFactory Pro" 試用版本建立 www.pdffactory.com

PDF 檔案使用 "pdfFactory Pro" 試用版本建立 www.pdffactory.com

丰宾电子（深圳）有限公司

CAPXON ELECTRONIC (SHEN ZHEN) CO., LTD

材 质 证 明 书

STRUCTURE AND MATERIALS

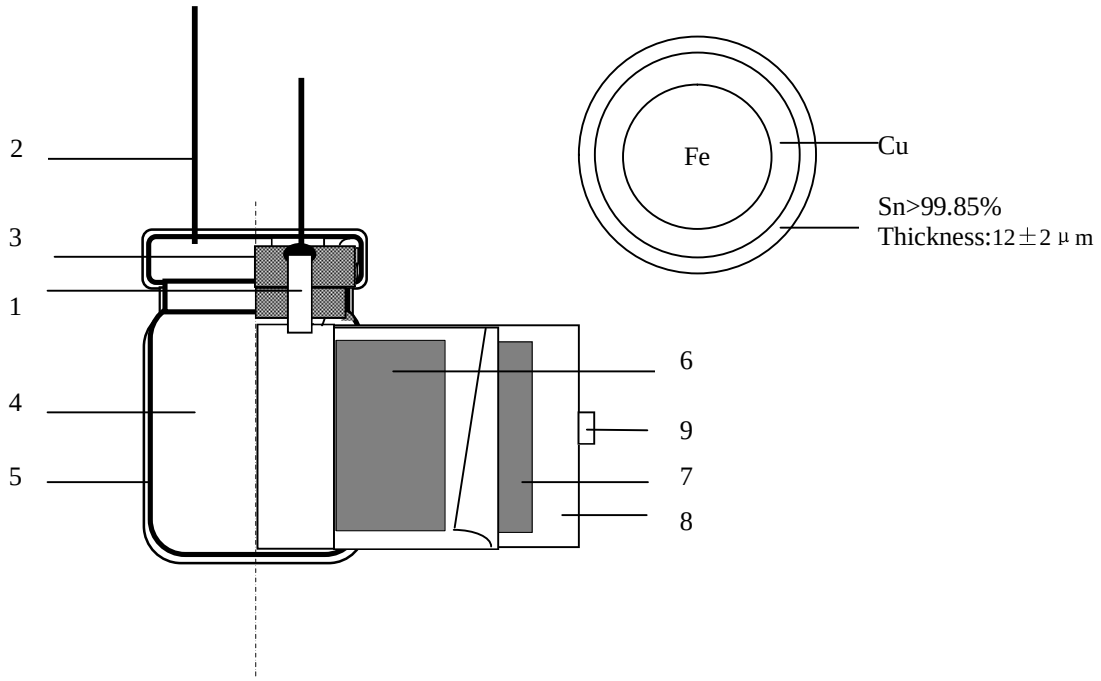

No	材 料 （Component）	材 质 （Materials）	供应商 （Vendor）
1	Al Wire	Aluminum 99.98%	Capxon / hongyang
2	CP Wire	Cu+Fe+Sn	Capxon / hongyang
3	Rubber	EPT or IIR	Lian Hua Xin / Qiang An
4	Sleeve	PET	Yun Lin / Moodeung
5	Case	Aluminum 98.5%	OAKLEY / Ao-xing
6	Anode Toil	Formed Aluminum 99.99% or 99.98%	CapXon / Zhan Chen / Haiyi
7	Cathode Toil	Etched Aluminum 99.7% 99.4%	Feilo
8	Separator	Manila+pulp,kraft	NKK / KAN / Xian He
9	Adhesive tape	Poly-propylene film(size>10x24)	XinF eiDie
	Electrolyte	Ethylene Glycol	CAPXON

PDF 檔案使用 "pdfFactory Pro" 試用版本建立 www.pdffactory.com

PDF 檔案使用 "pdfFactory Pro" 試用版本建立 www.pdffactory.com

CapXon

Part Number System

When placing and order for Aluminum Electrolytic Capacitors. Please observe following Catalog Part Number format that describes.

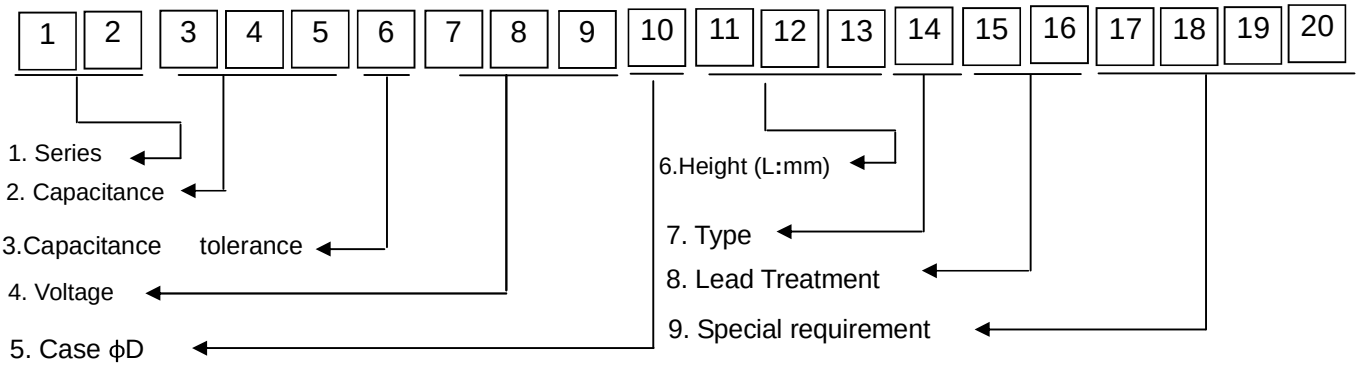

(1).Series

For the details, please refer to “List of the p\Products” on page 3.

(2).Capacitance

Capacitance is show in microfarad (μF)

Capacitance (μF)	0.1	0.47	1	4.7	10	100	1000	10000
Code	0R1	R47	010	4R7	100	101	102	103

(3).Capacitance tolerance

Tolerance%	±5	±10	±20	±30	-10to+30	-10to+50	-10to+20	-10to100	0to+20	-30to+0	±15
Code	H	K	M	N	Q	T	V	W	Z	U	S
Tolerance%	0to+30	0to+40	0to+50	-5to+20	-8to+5	+5to+20	0to-20	-15to+20	-25to+20	-50to+0	-5to+30
Code	Y	X	A	J	E	I	B	P	L	O	C

For tolerance other than these and specified capacitance tolerance, please specify the value on the order sheet.

(4).Voltage (W.V)

Voltage (W.V)	6.3	10	16	25	35	50	63	80	100	160	200	220	250	350	400	420	450	500	550
Code	6R3	010	016	025	035	050	063	080	100	160	200	220	250	350	400	420	450	500	550

(5).Case (ϕD: mm)

Diameter	3	4	5	6.3	7.3	8	10	12	13	16	18	20	22	25	30	35	40	42	45	51	63.5	76.2	89	100	14.5	12.5
Code	A	B	C	E	7	F	G	H	I	J	K	L	M	N	O	P	Q	U	V	R	S	T	X	D	Y	**Z**

(6). Height (L: mm)

Description	5	5.5	5.8	6.5	7	7.7	8	8.7	9	10	10.5	11	11.5	12.5	14	16	17	18
Code	050	055	058	065	070	077	080	087	9	100	105	110	115	125	140	160	170	180

Description	20	21	25	25.5	30	31.5	35	35.5	40	41	45	46	47	51	60	83	98	118	141	151
Code	200	210	250	255	300	315	350	355	400	410	450	460	470	510	600	830	980	A18	A41	A51

(7). Product type

Type	Without Lead Treatment	With Lead Treatment	Polymer
Code	A	E	P

PDF 檔案使用 "pdfFactory Pro" 試用版本建立 www.pdffactory.com

PDF 檔案使用 "pdfFactory Pro" 試用版本建立 www.pdffactory.com

(8). Lead Treatment (Radial type)

Description	Taping (Ammo Package)	Taping (Reel Package)	Lead Cutting	Lead Forming Cutting	Lead Forming only	Lead Crimping & Forming	Lead Cutting & Kink	Kink	Bending & Cutting	Forming &Kink
Code	TA、TB、TC、TD、TE、TF、	RA、RB、RC、RD、RE、.	CA	CF	FA	KF	CK	KA	CR 、CL	EF

Remarks: The product of V- chip sticks a dish to process form is “TR”.

(9) Special & appearance requirement (the 17th, 18th, 19th, 20th code)

Code	Special	Code	Special	Code	request characteristic	Code	Special
A	Terminals of Snap-in	H	Height requirement	R	Ripple current	U	Package & label
B	Rubber	I	L.C.	S	Countermeasure		
C	Lead wire	K	Vent line	T	Temperature characteristic		
D	D.F.	L	Life	V	Vt, Electrolyte paper		
E	Electrolyte	N	Nude	M	Solder, technics, form, Case with stud		
F	Pitch	P	Sleeve, tray, print, PVC sleeve	Y	clip loop		
G	Fill glue	Q	Capacitance, CV, Break	Z	Impedance		

Remarks:

1. If it’s without lead treatment & special requirement, after the 14th code is blank.
2. If it’s with lead treatment & without require special requirement, the 17th, 18th, 19th, 20th code is blank.
3. If it’s without lead treatment, but with special requirement, the 15th, 16th code filled with 0.
4. If it’s without lead treatment, but with special requirement, also exceeds 4 kinds, keystone characteristic is 4 codes.
5. If it’s with lead treatment, but with 1 special requirement, only remark 17th code, latter three codes is blank.
6. If it’s with lead treatment, but with 1 special requirement, and it is different from former data, the 17th is 0, the 18th code is characteristic.

PDF 檔案使用 "pdfFactory Pro" 試用版本建立 www.pdffactory.com

PDF 檔案使用 "pdfFactory Pro" 試用版本建立 www.pdffactory.com

一. 注意事項 Information

1. 最大均方根紋波電流 Maximum RMS ripple current

1.1.最大均方根紋波電流值是指+105°C 120Hz 測試值。

Maximum RMS ripples current at +105°C 120Hz.

1.2. 當電容器的使用溫度及頻率不是+105°C 120Hz 時，該最大均方根紋波電流值必須乘以下表所示的係數進行換算。

When capacitors are operated at temperatures other than +105°C, and frequency other than120Hz, the maximum RMS ripple currents must be multiplied by the factors shown in below table.

Multiplier for Ripple Current vs. Frequency：

Frequency(HZ)		60	120	400	1K	100K
Coefficient	250~350WV	0.8	1	1.2	1.3	1.4
	400~450WV	0.8	1	1.25	1.4	1.5

Multiplier for Ripple Current vs. Temperature:

Temperature℃	60	65	70	85	95	105
Multiplier	2.00	1.65	1.50	1.35	1.25	1.00

* The valid life span does not prolong(Consult to use)

1.3 當頻率與上面規定條件不同時，紋波電流不能超過允許紋波電流值乘以上表係數所得值。紋波電流驗證方法參照 JIS-C-5101-1(2010) No.: 4.23.

When frequency is different from specified condition shown as above, do not exceed the value obtained by multiplying the permissible maximum ripple current by the multiplier above. The ripples current verify methods according to JIS-C-5101-1(2010) No.: 4.23.

☆注意：（1）.紋波電流要對應工作頻率 Ripple current corrected with working frequency.

（2）當電路中紋波電流很難測量時，電容器自身的溫升應在 5℃以內。

Check the generated heat of capacitor when ripple current is hard to measure in the circuit. Promoted temperature by self-generating heat should be within 5℃.

2.工作電壓 Working Voltage (WV)

電容器的應用電壓要保證不可過壓（也就是高於額定電壓）。

Make sure that no excess voltage (that is, higher than the rated voltage) is applied to capacitor. Please pay attention so that the peak voltage, which is DC voltage, overlapped by ripple current, will not exceed the rated voltage.

3.絕緣性 Insulating

鋁電解電容器普通品表面套有乙烯基或類似材料的套管，這種套管一般是用來標示的。如果鋁殼需要絕緣，建議採用為絕緣設計的特殊類型的電容器。

General types of aluminum electrolytic capacitors are covered with a vinyl sleeve or the like. And this Sleeve is used for marking. When the internal element or the container is needed to be insulated, capacitors specially designed for insulation requirement are recommended to be used.

4.焊錫性 Soldering

4.1 在將各種元器件焊接在 PC 板上時，過高的焊接溫度或是過長的焊接時間都會引起套管二次收縮 ，導致破洞，並且必須在 PC 板的反面進行焊錫。

When soldering a PC board with various components, too high soldering temperature or too long dipping time may cause secondary shrinking of the sleeve and then the container unnecessarily exposed. The soldering must be done on the reverse of PC board.

4.2 如果套管與電路板接觸，在焊錫時可能熔化或損壞套管，因此建議電容器與電路板保持一定的距離。

Soldering may melt or break the sleeve when the sleeve is contacted with circuit boards. So the capacitors are recommended to be slightly apart from the circuit boards.

5.防爆 Vent

電容器（Φ≥10mm）在鋁殼底部設置了一個防爆裝置，當誤操作時防爆閥會打開以釋放內部較高的壓力。

The capacitor (Φ≥10mm) is provided with a safety vent on the bottom of the container. The vent would rupture in the event of the unsafe usage or misusage to relieve the internal higher pressure.

6.高海拔 High Altitude

該電容器可以在-25 to +105℃ 的溫度環境和 200,000 英尺的海拔高度運輸。

The capacitors can withstand those transportation conditions that temperature may range from -25 to +105℃ and the altitude can reach 200,000 feet.

7.清洗劑 Cleaning agents:

如果用含鹵元素的有機溶劑清洗電容器，溶劑可能會滲入電容內部導致腐蝕。

If the capacitor is cleaned in halogenated agents for organic removing solder flux solvent, the agents may penetrate into the inside of capacitor, and may generate corrosion.

8.環保方針 Environment-friendly policy

本公司依蒙特利爾協議書之規定，於生產過程中不使用破壞臭氧層之藥品。在電容器生產的整個制程中，包括生產、包裝、存儲和運輸，我司始終遵守環保和 ROHS 的相關法律法規。

None of ozone depleting chemicals (ODC) under the Montreal Protocol is used in manufacturing process of CapXon Electronic industrial CO., Ltd. In the entire process of capacitor's production, including manufacture, packaging, storage and transportation, our company always complies with the related Environmental Protection Laws and Regulations of RoHS.

9. 本公司品質量依 JIS-C-5101-1 標準考核，其信性試驗方法依 JIS-5101-4(非 SMD 液態)，-18（液態 SMD）之規範為基準。

CapXon's Products meet or exceed quality standards specified by JIS-C5101-1 Wand with reliability Requirements refer to JIS-C-5102-4(non-SMD liquid capacitor),-18(liquid SMD capacitor).

PDF 檔案使用 "pdfFactory Pro" 試用版本建立 www.pdffactory.com

PDF 檔案使用 "pdfFactory Pro" 試用版本建立 www.pdffactory.com

二・技術性能 Technical Feature

測試環境 Testing Environment：

方案 Precept / 環境條件 Condition	無特別規定及判定無疑問 No special regulation and judgment doubt	無特別規定而判定有疑問 No special regulation but have judgment doubt	在標準室內測試仍有爭議 Under the standard room testing but have dispute
溫度 Temperature	15～35℃	25±10℃	20±1℃
濕度 Humidity	25～75%RH	40 ～60%RH	63～67%RH
氣壓 Air pressure	86KPa～106KPa	86KPa～106KPa	86KPa～106KPa

<table>
<tr><th>序號 NO.</th><th>試驗項目 Item</th><th>實驗條件及判定 Conditions and Criterion</th></tr>
<tr><td>1</td><td>工作溫度範圍
Range of working temperature</td><td>-25℃~+105℃(250V~450V)</td></tr>
<tr><td>2</td><td>電容容量
Capacitance</td><td>實驗條件 Conditions：
測量溫度 Temperature: 20±2℃
測量頻率 Frequency: 120Hz
測量電壓 Voltage: 0.5Vrms
判定標準 Criterion:
容量偏差 Tolerance: ±20%</td></tr>
<tr><td>3</td><td>損耗角正切
Dissipation factor (tanδ)</td><td>實驗條件 Conditions：
測量溫度 Temperature: 20±2℃
測量頻率 Frequency: 120Hz
測量電壓 Voltage: 0.5Vrms
判定標準 Criterion:
<table><tr><td>工作電壓 W.V.(V)</td><td>250</td><td>350</td><td>400</td><td>420</td><td>450</td></tr><tr><td>損耗角正切 D.F.(%)max.</td><td>15</td><td>15</td><td>15</td><td>20</td><td>20</td></tr></table></td></tr>
<tr><td>4</td><td>漏電流
Leakage Current</td><td>實驗條件 Conditions：
將額定電壓加在電容和 1000Ω±10% 的保護電阻上充電 5 分鐘後測試。
The rated voltage shall be applied across the capacitors and its protective resistor which shall be 1000Ω±10%.The leakage current shall then be measured after an electrification period of 5 min.
判定標準 Criterion:
I≤ 3 $\sqrt{CV}$（μA）(250~450VDC）取較大值。Chose the greater value.
I: 漏電流 Leakage Current（μA），
C: 容量 Capacitance (μF)，
V:額定電壓 Rated Voltage（V）</td></tr>
</table>

PDF 檔案使用 "pdfFactory Pro" 試用版本建立 www.pdffactory.com

PDF 檔案使用 "pdfFactory Pro" 試用版本建立 www.pdffactory.com

<table>
<tr>
<td>5</td>
<td>引線強度
Terminal strength</td>
<td>實驗條件 Conditions：
引線抗拉強度 Tensile strength of termination:
沿電容器端子引線方向施加固定重力 N, 10±1S 。
A static load of N shall be applied to the terminal in the down-lead direction for 10±1S.
<table>
<tr><th>端 子 線 徑
Diameter mm</th><th>重力 Gravity
(±10%)</th><th>重錘重量 Weight
(±10%)</th></tr>
<tr><td>0.35＜d≤0.5</td><td>5N</td><td>0.51Kg</td></tr>
<tr><td>0.5＜d≤0.8</td><td>10N</td><td>1.02Kg</td></tr>
<tr><td>0.8＜d≤1.25</td><td>20N</td><td>2.04Kg</td></tr>
<tr><td>SNAP-IN 型 端子</td><td>40N</td><td>4.08Kg</td></tr>
</table>
引線抗彎折強度 Bending strength of termination:
在電容器引線施加固定重力 N,然後將電容本體彎折 90 度後回到原位，再向相反方向彎折 90 度後回到原位。如此操作約 2~3 秒為一個迴圈,操作至規定次數。注意彎曲時不可扭轉端子。
A static load of N applied to the lead wire, then bent the body through 90°, return to the original position. Next step bent it in opposite direction through 90° with the same speed, again return to the original position. Carry out this operation in about 2~3 sec for one cycle. Do it for specified cycles .But bending the termination is forbidden.
<table>
<tr><th>端 子 線 徑
Diameter mm</th><th>重力 Gravity
(±10%)</th><th>重錘重量 Weight
(±10%)</th></tr>
<tr><td>0.35＜d≤0.5</td><td>2.5N</td><td>2.5N</td></tr>
<tr><td>0.5＜d≤0.8</td><td>5N</td><td>5N</td></tr>
<tr><td>0.8＜d≤1.25</td><td>10N</td><td>10N</td></tr>
<tr><td>LUG 端子</td><td>20N</td><td>20N</td></tr>
</table>
SNAP-IN 型端子不做抗彎實驗，LUG 端子做折彎試驗,折彎度角 45℃。
判定標準 Criterion:
端子不得有鬆動、斷裂及接觸不良之情形。
The terminal should not be loose, breakage and bad connected.</td>
</tr>
<tr>
<td>6</td>
<td>溫度特性
Temperature characteristic</td>
<td>實驗條件 Conditions：
<table>
<tr><th>步驟
Step</th><th>溫度 Temperature</th><th>測量項目 Item</th></tr>
<tr><td>1</td><td>20±2℃</td><td>阻抗 Impedance</td></tr>
<tr><td>2</td><td>下限類別溫度
Lower Category temperature ±3°C</td><td>阻抗 Impedance</td></tr>
<tr><td>3</td><td>上限類別溫度
Upper Category temperature ±2°C</td><td>漏電 LC</td></tr>
</table>
要求達到熱平衡後測量，並且阻抗在同一頻率下測試
Testing when thermal equilibrium and Impedance must be on the same frequency.
判定標準 Criterion:
1.阻抗比不能超出表 1 所示值：Impedance ratio shall not exceed the values shown in Table 1.
2.LC≤800%初始規格值
2. Leakage current Shall not more than 800% of initial specified value.</td>
</tr>
<tr>
<td>7</td>
<td>高溫負荷
High temperature load</td>
<td>實驗條件 Conditions：
實驗溫度 Temperature ：105℃
施加電壓 Applied voltage：額定電壓 Rated voltage
實驗時間 Test time ：5000Hrs
測試條件 Test condition ：在標準大氣壓下保存 16 小時後進行測試
Test after keep on standard atmospheric conditions for 16 hours.
判定標準 Criterion:
1.容量的變化：△C/C ≤±20%原規格值
Capacitance Change Rate：△C/C ≤±20% of initial value
2.損耗角正切：DF ≤2 倍原規格值
Dissipation Factor: DF ≤2 times original Spec value
3.漏電流：LC ≤原規格值
Leakage Current: LC ≤original Spec value
4.外觀：無明顯損傷
Appearance: No visible damage.</td>
</tr>
</table>

PDF 檔案使用 "pdfFactory Pro" 試用版本建立 www.pdffactory.com
PDF 檔案使用 "pdfFactory Pro" 試用版本建立 www.pdffactory.com

8	高溫儲存 High Temperature Exposure(Storage）	實驗條件 Conditions： 實驗溫度 Temperature: 105℃ 施加電壓 Applied voltage：None 實驗時間 Test time：1000H 測試條件 Test condition: 在標準大氣壓下保存 16 小時後進行測試 Test after keep on standard atmospheric conditions for 16 hours. 判定標準 Criterion: 1.容量的變化：△C/C ≤±20%原規格值 Capacitance Change Rate：△C/C ≤±20% of initial value 2.損耗角正切：DF ≤2 倍原規格值 Dissipation Factor: DF ≤2 times original Spec value 3.漏電流：LC ≤原規格值 Leakage Current: LC ≤original Spec value 4.外觀：無明顯損傷 Appearance: No visible damage
9	浪湧試驗 Surge Test	實驗條件 Conditions： 實驗溫度 Temperature: 15~35℃ 施加電壓 Applied voltage： V 額≤315V 時，1.15 倍的額定電壓 V 額＞315V 時，1.1 倍的額定電壓 Rated voltage≤315V , 1.15 times rated voltage Rated voltage＞315V , 1.10 times rated voltage 週期 Period：充電 30 秒，放電 330 秒為一個週期。 Charge for 30 seconds，discharge for 330 seconds as a cycle 迴圈次數 Cycles：1000 測試條件 Test Condition：在標準大氣壓下保存 16 小時後進行測試。 Test after keep on standard atmospheric conditions for 16 hours. 判定標準 Criterion: 1.容量的變化：△C/C ≤±15%原規格值 Capacitance Change Rate：△C/C ≤±15% of initial value 2.損耗角正切：DF ≤原規格值 Dissipation Factor: DF ≤ Original Spec value 3.漏電流：LC ≤原規格值 Leakage Current: LC ≤original Spec value 4. 外觀：無明顯損傷 Appearance: No visible damage
10	振動 Vibration	實驗條件 Conditions： 頻率範圍 Frequency Scope : 10~55HZ 振幅 Amplitude : 0.75mm 加速度 Acceleration : 98 m/s^2（10g） 振動時間 Vibration Time : X、Y、Z 各方向迴圈各 2 小時、共計 6 小時 X , Y , Z directions each for 2 Hrs, total 6 Hrs. 測試條件 Test Condition : 從振動儀上取下電容後在 30 分鐘內測試 Testing within 30 minutes after take it down from vibration machine 判定標準 Criterion: 1.容量的變化：△C/C ≤±5%原規格值 Capacitance Change Rate：△C/C ≤±5% of initial value 2.損耗角正切：DF ≤原規格值 Dissipation Factor: DF ≤ Original Spec value 3.漏電流：LC ≤原規格值 Leakage Current: LC ≤original Spec value 4. 外觀：無明顯損傷 Appearance: No visible damage

PDF 檔案使用 "pdfFactory Pro" 試用版本建立 www.pdffactory.com

PDF 檔案使用 "pdfFactory Pro" 試用版本建立 www.pdffactory.com

<table>
<tr><td>11</td><td>可焊性
Solderability</td><td>實驗條件 Conditions：
焊錫種類 Kind of solder: Sn：96.5%，Ag：3%，Cu：0.5%或是同等品。
Sn：96.5%，Ag：3%，Cu：0.5% or equal article
錫爐溫度 Solder stove temperature: 245±5℃
浸錫時間 Immerse time: 2.0±0.5S
浸入或移出速度 Speed of immerse or leave: 25±2.5mm/s
浸入深度 Immerse depth: 浸入深度保持在電容本體與焊錫之間距離在 1.5~2.0mm。
1.5~2.0mm between the capacitor body and the solder.
試驗次數 times: 1.
測試條件 Test Condition: 從錫爐中取出後 2 小時測試。
Testing after 2 hours for taking it out from the solder stove.
判定標準 Criterion:
新錫附著度應大於 95%。
Above 95% area of surroundings surface shall be covered by the new soldering.</td></tr>
<tr><td>12</td><td>耐焊接熱
Resistance to soldering heat</td><td>實驗條件 Conditions：
焊錫種類 Kind of solder: Sn：96.5%，Ag：3%，Cu：0.5%或是同等品。
Sn：96.5%，Ag：3%，Cu：0.5% or equal article
錫爐溫度 Solder stove temperature: 260（0~3）℃
浸錫時間 Immerse time: 10±1S
浸入或移出速度 Speed of immerse or leave: 25±2.5mm/s
浸入深度 Immerse depth: 浸入深度保持在電容本體與焊錫之間距離在 1.5~2.0mm。
1.5~2.0mm between the capacitor body and the solder.
試驗次數 times: 1.
測試條件 Test Condition: 從錫爐中取出後 2 小時測試。
Testing after 2 hours for taking it out from the solder stove.
判定標準 Criterion:
1.容量的變化：△C/C ≤±5%原規格值
Capacitance Change Rate：△C/C ≤±5% of initial value
2.損耗角正切：DF ≤原規格值
Dissipation Factor: DF ≤ Original Spec value
3.漏電流：LC ≤原規格值
Leakage Current: LC ≤original Spec value</td></tr>
<tr><td>13</td><td>防爆試驗
Vent</td><td>實驗條件 Conditions：
<table>
<tr><th>試驗方法
Method</th><th>電壓
Voltage</th><th>尺寸
Size</th><th>保持電流
Current</th></tr>
<tr><td>逆向電壓法：電容兩端施加直流反向電壓 80V。
Reverse Voltage:80V</td><td>0V≤WV＜160V</td><td>φ≤22.4mm
φ＞22.4mm</td><td>1A
10A</td></tr>
<tr><td>過壓法：兩端施加過電壓（工作電壓的 1.5 倍）
Over Voltage:1.5Rated voltage</td><td>WV≥160V</td><td>所有尺寸
Every Size</td><td>1A</td></tr>
</table>
判定標準 Criterion:
當防爆閥打開時，不能有爆炸、閃火、燃燒等現象。
When the pressure relief vent operated, There shall be no explosion, flash, flame, spark or fire from the capacitor during or after the test.
如果防爆閥 30 分鐘未打開，判定防爆合格,僅適用於過壓法。
If the vent does not operate with the voltage applied for 30 minutes, the test is considered to be passed only for the method of over voltage.</td></tr>
</table>

PDF 檔案使用 "pdfFactory Pro" 試用版本建立 www.pdffactory.com
PDF 檔案使用 "pdfFactory Pro" 試用版本建立 www.pdffactory.com

<table>
<tr>
<td>14</td>
<td>溫度迴圈
Temperature Cycling</td>
<td>實驗條件 Conditions:
<table>
<tr><th>階段 Step</th><th>溫度 Temp.</th><th>時間 Time (Min)</th></tr>
<tr><td>1</td><td>下限類別溫度±3℃</td><td>30±3</td></tr>
<tr><td>2</td><td>25±5℃</td><td>3</td></tr>
<tr><td>3</td><td>上限類別溫度±2℃</td><td>30±3</td></tr>
<tr><td>4</td><td>25±5℃</td><td>3</td></tr>
<tr><td colspan="3">參照 JIC-5101-1 (2010) No:4.16，從 1 到 4 為一個迴圈，共需要 10 個迴圈。
Referring to JIC-5101-1 (2010) No:4.16 (1) to (4) = 1 cycle, total 10 cycles.</td></tr>
</table>
判定標準 Criterion:
1.容量的變化：△C/C ≤±5%原規格值
Capacitance Change Rate：△C/C ≤±5% of initial value
2.損耗角正切：DF ≤原規格值
Dissipation Factor: DF ≤ Original Spec value
3.漏電流：LC ≤原規格值
Leakage Current: LC ≤original Spec value
4. 外觀：無明顯損傷
Appearance: No visible damage</td>
</tr>
<tr>
<td>15</td>
<td>穩態濕熱
High temp and humidity</td>
<td>實驗條件 Conditions：
溫度 Temperature: 40±2℃
濕度 Humidity: 90~95%RH
維持時間 Maintained Time: 250H
測試條件 Test Condition: 在標準大氣壓下保存 16 小時後進行測試
Test after keep on standard atmospheric conditions for 16 hours.
判定標準 Criterion:
1.容量的變化：△C/C ≤±20%原規格值
Capacitance Change Rate：
△C/C ≤±20% of initial value
2.損耗角正切：DF ≤1.2 倍原規格值
Dissipation Factor: DF ≤ 1.2times of the original Spec. value
3.漏電流：LC ≤原規格值
Leakage Current: LC ≤original Spec value
4. 外觀：無明顯損傷
Appearance: No visible damage</td>
</tr>
</table>

三・CHARACTERISTICS TABLE

阻抗比值表 （表 1. TABLE 1）

額定電壓 Rated Voltage(V)	250	350	400	420	450
Z-25℃/Z+20℃	3	8	8	8	8

PDF 檔案使用 "pdfFactory Pro" 試用版本建立 www.pdffactory.com

PDF 檔案使用 "pdfFactory Pro" 試用版本建立 www.pdffactory.com

四. 標示說明 MARKING：

例：

(1) **CapXon：** 製造商標 Brand

(2) **400V：** 電壓 Rated Voltage

(3) **82μF ：** 容量 Nominal Capacitance

(4) 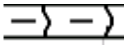 ： (-)負極指示 Polarity(Cathode Indicate)

(5) **105℃：** 最高工作溫度(Maximum Operating Temp.)

(6) **LY：** 系列 Series

(7) **P1802：** 生產週期 Date Code
(18：2018 年 Year; 02：第 2 周 Week）

(8) **VENT：** 安全標示 Safety Vent

正面 Front:

背面 Back:

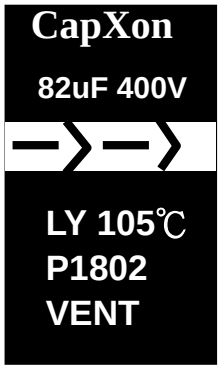

PDF 檔案使用 "pdfFactory Pro" 試用版本建立 www.pdffactory.com

PDF 檔案使用 "pdfFactory Pro" 試用版本建立 www.pdffactory.com

Lead wire Bending product packaging standard

(must use separated between each row back products)

Product size diameter * height (mm)	The arrangement (pcs)	The inner box number (pcs)	The inner box code	Each box the box number (pcs)	Outside the box number (pcs)	The outer box code
12.5X25↓	25/ line	350	32H2445	6	2100	32A2445(A)
12.5X30-40	25/ line	350	32H2455	5	1750	32A2445(A)
12.5X45~51	26/ line	364	32H2550	4	1456	32A2545-1(A)
13X20-30	25/ line	350	32H2535	6	2100	32A2545-1(A)
13X31-40	25/ line	350	32H2545	5	1750	32A2545-1(A)
13X45~51	25/ line	350	32H2550	4	1400	32A2545-1(A)
13X55-60	25/ line	350	32H2560	3	1050	32A2545-1(A)
14.5X45-51	20/ line	240	32H2250	4	960	32A2245-1(A)
16X16~30	20/ line	180	32H2535	6	1080	32A2545-1(A)
16X31~41	20/ line	180	32H2545	5	900	32A2545-1(A)
16X45↑	20/ line	180	32H2550	4	720	32A2545-1(A)
18X21~31.5	16/ line	144	32H2240	6	864	32A2245-1(A)
18X35.5~41	16/ line	144	32H2245	5	720	32A2245-1(A)
18X45↑	16/ line	144	32H2250	4	576	32A2245-1(A)
20X25~30	16/ line	160	32H2535	6	960	32A2545-1(A)
20X31-40	16/ line	160	32H2545	5	800	32A2545-1(A)
20X41-46	16/ line	160	32H2550	4	640	32A2545-1(A)
22X21～26	25/2 line	100	32H2240	6	600	32A2545-1(A)
22X30～37	25/2 line	100	32H2245	5	500	32A2545-1(A)
22X40～51	25/2 line	100	32H2250	4	400	32A2545-1(A)
25X21-26	25/2 line	100	32H2535	6	600	32A2545-1(A)
25X30-37	25/2 line	100	32H2545	5	500	32A2545-1(A)
25X40-51	25/2 line	100	32H2550	4	400	32A2545-1(A)
25X52↑	25/2 line	100	32H2560	3	300	32A2545-1(A)

Remarks.

1. if the customer requirements of weight, the change outside the box corresponding use, namely the loading quantity by

2. Because the board thickness deviation, shaking the actual packaging process, requiring the use of back filling, the whole box of products without shaking sound principl.

3. add the electrooptical foil according to customer requirements.

packaging step :

1)Cassette packaging



PDF 檔案使用 "pdfFactory Pro" 試用版本建立 www.pdffactory.com