LI TAI ELECTRONIC ENTERPRISE CO.,LTD

CUSTOMER

QISDA

SPECIFICATION FOR APPROVAL

CUSTOMER PART NO: 1J.20359.001

LI TAI PART NO: PT-022686-3HR

DESCRIPTION: TRANSFORMER

DATE: 2025-12-10

TAIWAN □HEAD OFFICE：東力泰企業有限公司

2F-2, No.16, Jian Ba Road, Chang Ho Dist. , New Taipei City, 23511 Taiwan

新北市中和區建八路 16 號 2 樓之 2

TEL: (02) 8226-3838 FAX: (02) 8226-5522

CHINA □FUQING PLANT：福清景翔電子配件有限公司

Rongqiao Economic and Technological Development Zone, Fuyu Rd., Fuqing, Fujian, China

福建省福清市融僑經濟技術開發區福玉路

TEL: 86-591-85367150 FAX: 86-591-85381525

□SHENZHEN PLANT： 澄萬電子（深圳）有限公司

Area A, 3rd Floor, No. 3, Third Industrial Zone, Xiacun Community, Gongming Street,,Guangming District, 518106, Shenzhen,, China

深圳市光明新區公明辦事處下村社區第三工業區 3 棟 3 樓 A 區.

TEL: 86-755-27730621 FAX: 86-755-27730576

□SUZHOU PLANT：蘇州祥崴電子有限公司

1027-2 Sunwu Road, Xukou Town, Wuhzong District, Suzhou, China

江蘇省蘇州市吳中區胥口鎮孫武路 1027-2 號

TEL: 86-512-66219182 FAX: 86-512-66219183

□Guangxi PLANT：广西東力泰電子有限公司

4th Floor, Building 9, Hetai Science and Technology Park, Tiandeng County, Chongzuo City, Guangxi

广西崇左市天等县返乡创业园和泰科技园 9 栋 4 楼

TEL: 86-771-3500788

Customer	Qisda	Customer P/N	1J.20359.001	Spec Version	A7
Supplier	LI TAI	Maker P/N	PT-022686-3HR	Component Type	LQ2516

Form Version: 4.0

Transformer / Coil Specification

■ RoHS ■ Halogen Free ■ 無紅磷 ■ PFAs Free ■

Customer	Qisda
Customer P/N	1J.20359.001
Core Type	LQ2516
Maker P/N	PT-022686-3HR
Create Date	2025-12-10
Spec Version	A7
Maker Factory Address	Manufacture：LI TAI ELECTRONIC ENTERPRISE CO LTD ■SUZHOU PLANT: 1027-2 SUNWU RD XUKOU TOWN WUZHONG DISTRICT SUZHOU JIANGSU CHINA 祥崴電子: 江蘇省蘇州市吳中區胥口鎮孫武路 1027-2 號 TEL:86-512-66219182 ■Guangxi PLANT: 4th Floor, Building 9, Hetai Science and Technology Park, Tiandeng County, Chongzuo City, Guangxi 广西天等東力泰電子有限公司: 广西崇左市天等县返乡创业园和泰科技园 9 栋 4 楼 TEL:86- 771-3500788

Customer	Qisda	Customer P/N	1J.20359.001	Spec Version	A7
Supplier	LI TAI	Maker P/N	PT-022686-3HR	Component Type	LQ2516

Form Version: 4.0

History

Version	Original	Change To	Date	Remark
A0	ISSUE		2018-01-04	
A1	高度 18.0 MAX	高度 17.0 MAX	2018-01-26	
A2		增成品圖、Q 值、DC BIAS	2018-03-07	
A3		取消 N2 11-6 0.32x1 18ts	2018-03-22	
A4		NOTE3 增加 PIN11 CUT OFF 漏電感 LK:18.5uH MAX 取消 N2 後的成品圖更換	2018-03-30	
A5		增 DOT ON PIN1 材料表增加 PAINT	2018-04-27	
A6		包裝頁增備註：包裝吸塑盒需符合 Qisda 自動化塑盤的定義	2018-05-03	
A7	Form Version: 3.0 Marking INK 噴印	Form Version: 4.0 Marking 激光刻印, 取消 INK & PAINT	2025-12-10	

Customer	Qisda	Customer P/N	1J.20359.001	Spec Version	A7
Supplier	LI TAI	Maker P/N	PT-022686-3HR	Component Type	LQ2516

Form Version: 4.0

Content:

- Configuration & Dimension
- Bobbin Dimension
- Winding Specification
- Electrical Characteristics
- Material List
- Package Specification
- Reliability Criteria
- Qisda Check List

Customer	Qisda	Customer P/N	1J.20359.001	Spec Version	A7
Supplier	LI TAI	Maker P/N	PT-022686-3HR	Component Type	LQ2516

Form Version: 4.0

● Configuration & Dimension **UNIT: m/m**

(Should be including Top View、Front View、Bottom view、Side View、Pin Pad Drawing、Picture of Core Tapping &Other note)

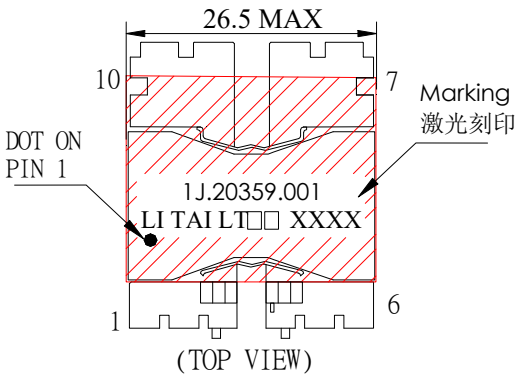

(TOP VIEW)

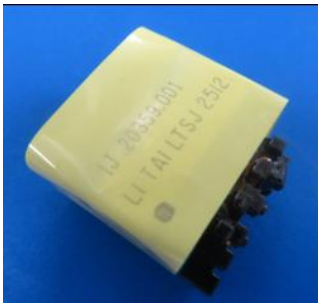

<VIEW C>

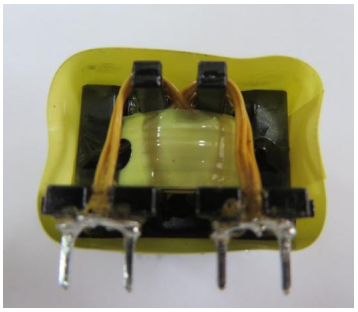
<VIEW D>

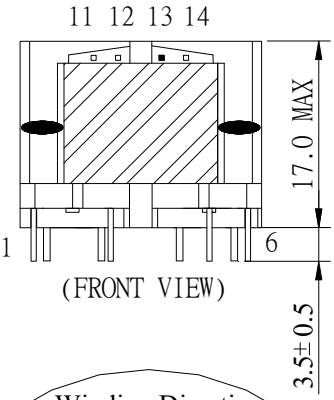

(FRONT VIEW)

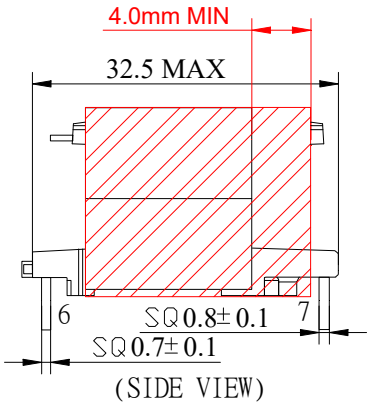

(SIDE VIEW)

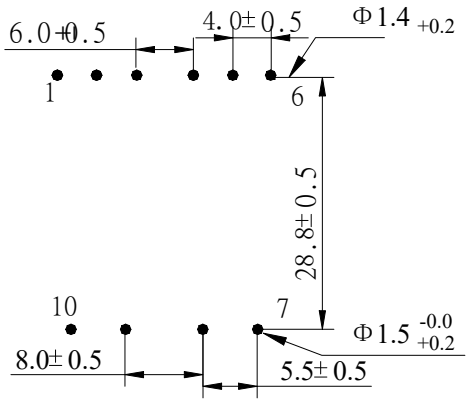

PIN PAD BOTTOM VIEW



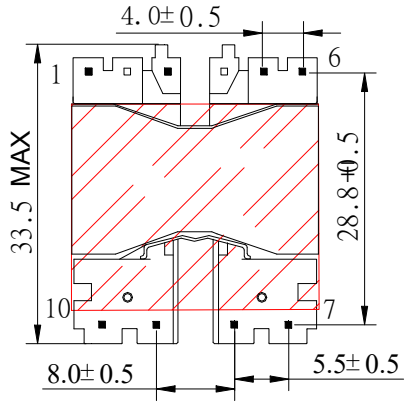

(BOTTOM VIEW)

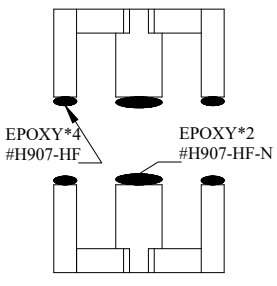

<VIEW A>

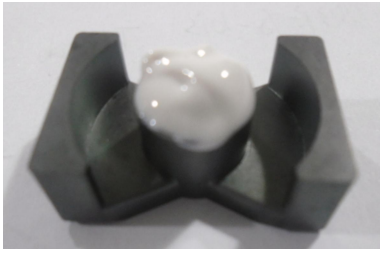
<VIEW B>

Customer	Qisda	Customer P/N	1J.20359.001	Spec Version	A7
Supplier	LI TAI	Maker P/N	PT-022686-3HR	Component Type	LQ2516

Form Version: 4.0

Note:

No.	Deacription	Remark
1	Marking Rule	MANUFACTURING SITE: (□□□□) LTFC: Fujian,China LTSZ: Shenzhen,Gongdong,China LTSJ: Suzhou,Jiangsu,China LOT NO (XX XX) YEAR WEEK
2	PIN1 朝外繞製,DOT ON PIN1. **(Need Drawing)**	FRONT VIEW
3	PIN 2,4,11,12,14CUT OFF	
4	理線焊錫點勿超過 STAND OFF	
5	CORE 研磨至 TOP 端	
6	CORE 中柱點軟膠、側邊接縫處點硬膠 **(Need Drawing)**	VIEW A
7	CORE 中柱點膠量涵蓋中柱三分之二的面積 (No Gap 可不點膠) **(Need Drawing)**	VIEW B
8	PIN10,9 連錫，PIN7,8 連錫.	
9	PIN13 鍍錫後需點 EPOXY 覆蓋焊點即可.	
10	FIX CORE BY WITH MYLAR TAPE 2Ts	
11	外圍 TAPE 沿鐵芯面覆蓋二次側 4mm MIN	
12	成品須真空含浸,含浸後 PIN 腳須二次焊錫	
13	WEIGHT is 28.4 +/- 2 g	
14	Photo for Final sample	VIEW C
15	二次側出入線結線圖	VIEW D

Customer	Qisda	Customer P/N	1J.20359.001	Spec Version	A7
Supplier	LI TAI	Maker P/N	PT-022686-3HR	Component Type	LQ2516

Form Version: 4.0

- Bobbin Dimension

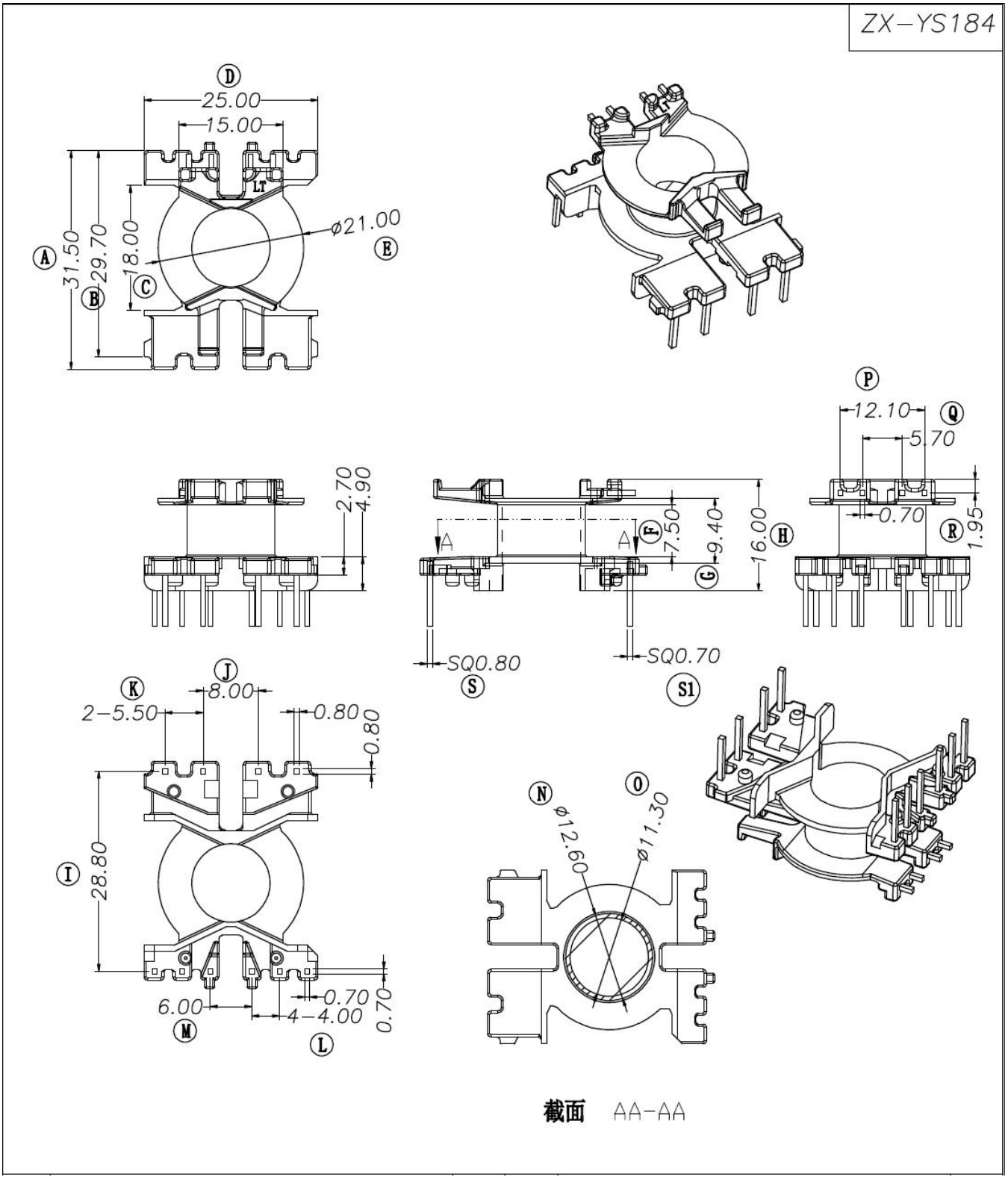

Customer	Qisda	Customer P/N	1J.20359.001	Spec Version	A7
Supplier	LI TAI	Maker P/N	PT-022686-3HR	Component Type	LQ2516

Form Version: 4.0

無鹵&無磷長春電木粉
Halogen & Phosphorus Free
LONGLITE PM Phenolic Molding Compound

					Ammonia Free（無氨材）		
試驗項目 ITEM		ASTM	JIS	UNIT(單位)	T220NA	T200NA	T200HF
無鹵 Halogen / 無磷 Phosphorus Free		D-792	JIS K7112		●/●	○/●	●/●
比 重 Specific Gravity		D-792	JIS K7112		1.75	1.47	1.48
吸 水 率 Water Absorption(Normal)		D-570	JIS K6911	%	0.1	0.3	0.3
收 縮 率 Molded Shrinkage	射出成形 Injection	D-955	JIS K6915	%	0.5	1.0	1.0
	移送成形 Transfer		JIS K6915	%	0.3	0.7	0.7
	壓縮成形Compression		JIS K6915	%	0.2	0.5	0.5
加熱後外觀 Heat Resistance		D-648	JIS K6915	℃-2hr	230	210	210
熱變形溫度 Deflection Temp.			JIS K7207	264psi×℃	210	185	185
耐 燃 性 UL Flammability		UL-94	UL 94	—	94 V-0/0.15mm	94 V-0/0.38mm	94 V-0/0.4mm
衝擊強度 Impact Strength	Charpy Impact	D-256	JIS K7111	kgf cm/cm^2	7.0	4.0	4.0
	Izod Impact		JIS K6911	kgf cm/cm	5.5	3.5	3.5
曲折強度 Flexual Strength		D-790	JIS K7203	kgf /mm^2	18.0	11.2	11.2
引張強度 Tensile Strength		D-651	JIS K6911	kgf /mm^2	8.0	6.0	6.0
壓縮強度 Compressive Strength		D-695	JIS K6911	kgf /mm^2	23.0	21.0	21.0
絕緣抵抗 Insulation Resistance	常 態 (Nomal)	D-257	JIS K6915	Ω	1×10^{13}	1×10^{11}	1×10^{11}
	煮沸後 (After Boiling)		JIS K6915	Ω	1×10^{12}	1×10^{9}	1×10^{9}
耐 電 壓 Dielectric Strength		D-149	JIS K6915	KV/mm	14	11.5	11.5
體積抵抗 Volume Resistivity		D-257	JIS K6911	Ω-cm	1×10^{13}	1×10^{12}	1×10^{12}
耐 電 弧 Arc Resistivity		D-495	JIS K6911	sec	180	150	150
ASTM規格 ASTM Grade		D-700	D-700		13	13	13
JIS規格 JIS Grade		JIS K6915	JIS K6915		EG, HH, MG	EG, HH	EG, HH



Customer	Qisda	Customer P/N	1J.20359.001	Spec Version	A7
Supplier	LI TAI	Maker P/N	PT-022686-3HR	Component Type	LQ2516

Form Version: 4.0

2020/10/15

南通住友電木有限公司
Sumitomo Bakelite (Nantong) Co., Ltd.

Engineering Thermosetting Material

SUMIKON® PM Technical Data Sheet

项目 Items		单位 Unit	PM-9825 Type：J 黑	试验方法 Test Method
电气特性 Electric	绝缘电阻（常态） Insulation resistance (As Mold)	Ω	1×10^{13}	JIS K 6911
	绝缘电阻（煮沸后） Insulation resistance (After boiling)	Ω	1×10^{12}	JIS K 6911
机械特性 Mechanical	弯曲强度 Flexural strength	MPa	185	JIS K 6911
	弯曲模量 Flexural modulus	GPa	13.8	JIS K 6911
	拉伸强度 Tensile strength	MPa	120	JIS K 6911
	冲击强度 Charpy impact strength notched	kJ/m^2	4.4	JIS K 6911
物理特性 Physical	比重 Specific Gravity	—	1.66	JIS K 6911
	成型收缩率 Molding shrinkage	%	0.38	JIS K 6911
	吸水率 Water absorption	%	0.21	JIS K 6911
热特性 Thermal	热变形温度 Temp. of deflection under load	℃	220	JIS K 6911

1）试验片是用传递模塑成型方式制成
Properties measured on transfer molded test specimens.

2）上述特性值仅为代表值，而非保证值
The above values are typical values, not guaranteed.

以上

Copyright © April 2, 2013 SBHPP. All rights reserved. All products denoted with ® or ™ are registered trademarks or trademarks of Sumitomo Bakelite Co., Ltd. or its affiliates. The information presented in this document is provided in good faith, but no warranty is given or is to be implied regarding its accuracy or relevance to any particular application. Users must satisfy themselves regarding the suitability and safety of their use of the information and products in the application concerned. Nothing herein is to be construed as advising or authorizing the use of any invention covered by existing patents without license from the owners thereof.

Customer	Qisda	Customer P/N	1J.20359.001	Spec Version	A7
Supplier	LI TAI	Maker P/N	PT-022686-3HR	Component Type	LQ2516

Form Version: 4.0

Core Dimension

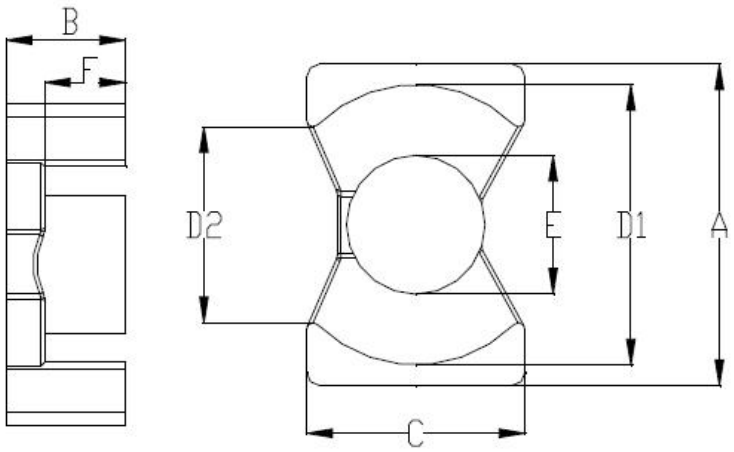

尺寸 DIMENSIONS (mm)	
A	25.0±0.4
B	9.3±0.2
C	17.0±0.3
D1	21.8±0.4
D2	16.0±0.4
E	10.8±0.2
F	6.3±0.15

Customer	Qisda	Customer P/N	1J.20359.001	Spec Version	A7
Supplier	LI TAI	Maker P/N	PT-022686-3HR	Component Type	LQ2516

Form Version: 4.0

3C97

Material Specifications

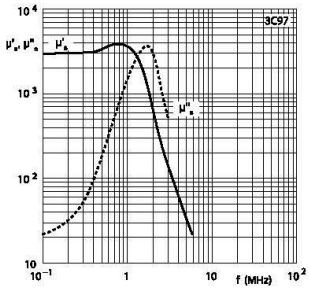

Fig. 1 Complex permeability as a function of frequency

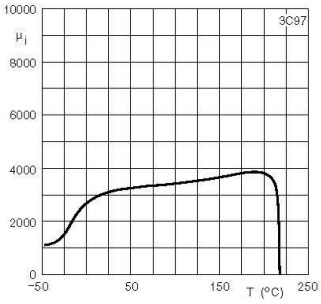

Fig. 2 Initial permeability as a function of temperature

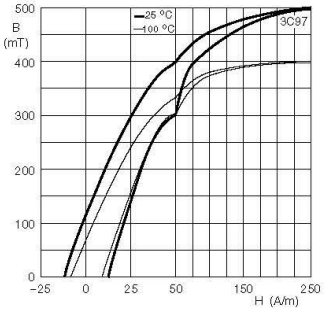

Fig. 3 Typical B-H loops

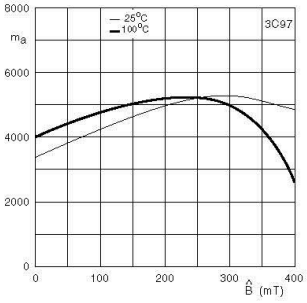

Fig. 4 Amplitude permeability as a function of peak flux density

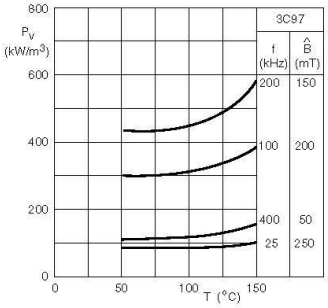

Fig. 5 Specific power losses for several frequency/flux density combinations as a function of temperature

Symbol	Conditions	Value	Unit
μ_i	25 °C; ≤ 10 kHz, 0.25 mT	3000±20%	
μ_a	100 °C; 25 kHz, 200 mT	≈ 5000	
Bsat	25 °C; 10 kHz, 1200 A/m	≈ 530	mT
	100 °C; 10 kHz, 1200 A/m	≈ 410	
P_V	60 °C; 100 kHz; 200 mT	≈ 320	kW/m^3
	100 °C; 100 kHz; 200 mT	≈ 320	
	140 °C; 100 kHz; 200 mT	≈ 380	
ρ	DC; 25 °C	≈ 5	Ωm
T_C		≥ 215	°C
Density		≈ 4800	kg/m^3

TDG MnZn材料特性表与特性曲线 Material Characteristic Sheet & Figures

MnZn功率铁氧体材料特性
MnZn Power Ferrite material Characteristics

特性 Characteristics		单位 Unit	TP4	TP4A	TP4S	TP4B	TP4C	TP4D	TP4E
初始磁导率 μ_i (10kHz) Initial permeability	25℃ H<0.4A/m		2300 ±25%	2400 ±25%	2000 ±25%	2500 ±25%	3200 ±25%	2500 ±25%	1500 ±25%
饱和磁通密度Bs Saturation magnetic flux density (H=1194A/m)	25℃	mT	510	510	520	530	530	520	510
	100℃	mT	390	390	410	420	420	410	440
剩磁Br Remanence	25℃	mT	100	110	135	120	130	210	210
	100℃	mT	55	60	60	80	80	60	70
矫顽力Hc Coercivity	25℃	A/m	14	13	13	12	11	14	24
	100℃	A/m	9	6.5	7	8	10	7	13
功率损耗 Pcv Core Loss	100kHz 200mT 正弦波	25℃ kW/m³	650	600	650	570	350	600	1000
		60℃ kW/m³	/	/	/	250 (75℃)	250 (45℃)	400	/
		100℃ kW/m³	410	300	300	460	660	250	480
		120℃ kW/m³	500	400	350	/	/	/	/
电阻率 ρ Electrical resistivity		Ω • m	6.5	6.5	6.5	3	3	4	3
居里温度Tc Curie temperature		℃	≥220	≥215	≥220	≥220	≥220	≥220	≥285
密度d Density		kg/m³	4.8×10^3	4.8×10^3	4.8×10^3	4.8×10^3	4.8×10^3	4.8×10^3	4.8×10^3

TDG 材料特性表与特性曲线 Material Characteristic Sheet & Figures

材料/Material:TP4D

特点/Features:

1. 低磁芯损耗,高饱和磁感应强度/Low Core Loss and High Saturation Flux Density
2. 损耗最低的温度点约在100℃/The Temperature Point of the Lowest Core Loss is 100℃

Bs-Temperature

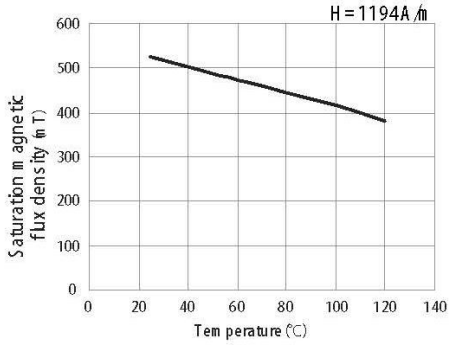

Initial permeability	μ_i	25℃	2500±25%
Saturation magnetic flux density	Bs(mT) 1194A/m	25℃	520
		100℃	410
Remanence	Br(mT)	25℃	210
		100℃	60
Coercivity	Hc(A/m)	25℃	14
		100℃	7
Core loss	Pcv(kW/m^3) 100kHz 200mT	25℃	600
		60℃	400
		100℃	250
Curie temperature	Tc(℃)		≥220
Electrial resistivity	ρ(Ω·m)		4
Density	d(kg/m^3)		4.8×10^3

Test core:Toroid(mm)
OD:31
ID:19
H: 6

μ_i-Temperature

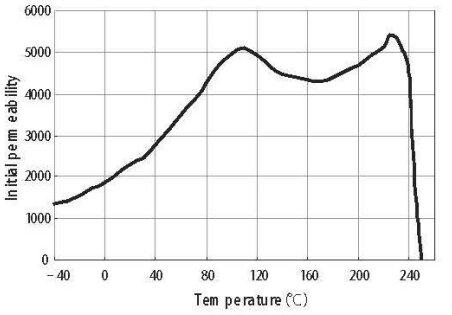

μ_i-Frequency

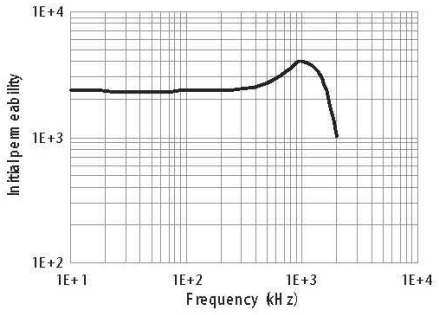

Customer	Qisda	Customer P/N	1J.20359.001	Spec Version	A7
Supplier	LI TAI	Maker P/N	PT-022686-3HR	Component Type	LQ2516

Form Version: 4.0

材料特性表与特性曲线 Material Characteristic Sheet & Figures TDG

材料/Material:TP4D

Pcv-Temperature

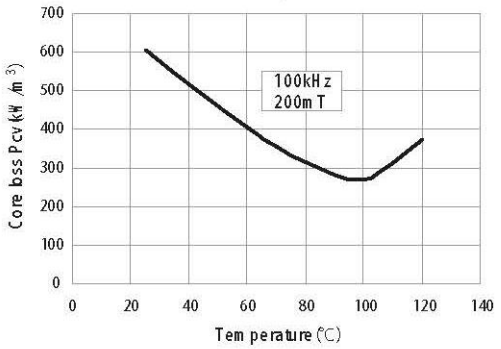

μ_a-Bm

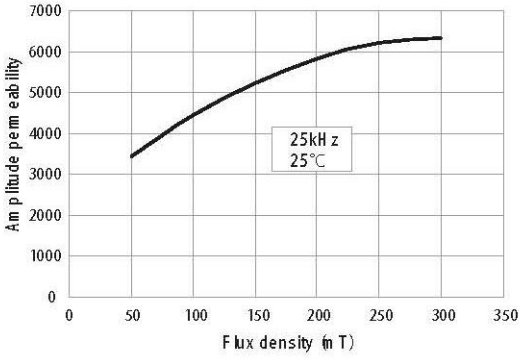

Pcv-Bm

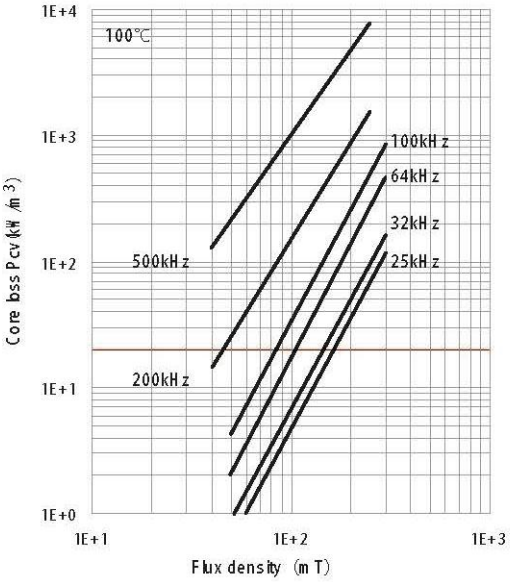

Pcv-Bm

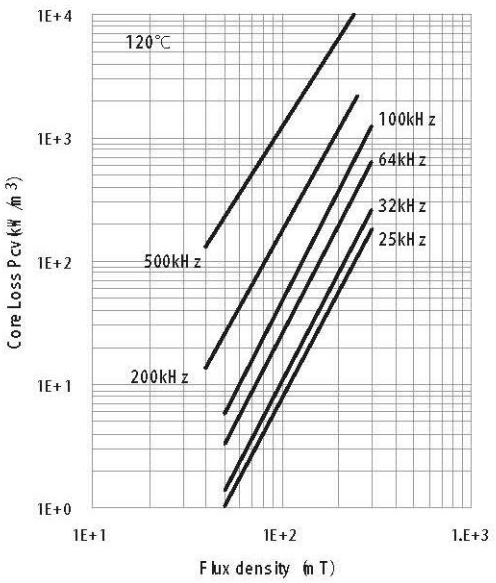

FERRITES TDK

Mn-Zn系 开关电源用铁氧体的材质一览

■材质特性

材质	初始磁导率 μi	单位体积磁心损耗（磁心损耗）* Pcv (kW/m³) B=200mT 100kHz sine wave				饱和磁通密度* Bs (mT) H=1194A/m				剩余磁通密度* Br (mT) H=1194A/m				矫磁力* Hc (A/m) H=1194A/m				居里温度 Tc (℃)	密度* db (kg/m³) ×10³	体积电阻率* ρv (Ω·m)
		25℃	60℃	100℃	120℃	25℃	60℃	100℃	120℃	25℃	60℃	100℃	120℃	25℃	60℃	100℃	120℃			
PC47	2500±25%	600	400	250	360	530	480	420	390	180	100	60	60	13	9	6	7	≥230	4.9	4
PC90	2200±25%	680	470	320	460	540	500	450	420	170	95	60	65	13	9	6.5	7	≥250	4.9	4
PC95	3300±25%	350		290	350	530	480	410	380	85	70	60	55	9.5	7.5	6.5	6	≥215	4.9	6

* Typ.值

材质	初始磁导率 μi	相对损耗系数* tanδ/μi ×10⁻⁶	饱和磁通密度* Bs (mT) H=1194A/m 25℃	剩余磁通密度* Br (mT) H=1194A/m 25℃	矫磁力* Hc (A/m) H=1194A/m 25℃	居里温度 Tc (℃)	密度* db (kg/m³) ×10³	体积电阻率* ρv (Ω·m)
HS72	7500±25% (2000min. at 500kHz)	30(100kHz)	430	55	4	≥130	4.9	0.2
HS10	10000±25%	30(100kHz)	400	70	3	≥120	4.9	0.2

* Typ.值

黄色涂层的品名为不推荐用于新设计中的产品

FERRITES TDK

Mn-Zn系 开关电源用铁氧体 PC47的材质特点

■材质特性

初始磁导率 μi	单位体积磁心损耗（磁心损耗）* Pcv (kW/m³) B=200mT 100kHz sine wave				饱和磁通密度* Bs (mT) H=1194A/m				剩余磁通密度* Br (mT) H=1194A/m				矫磁力* Hc (A/m) H=1194A/m				居里温度 Tc (°C)	容积密度* db (kg/m³) ×10³	体积电阻率* ρv (Ω·m)
	25°C	60°C	100°C	120°C	25°C	60°C	100°C	120°C	25°C	60°C	100°C	120°C	25°C	60°C	100°C	120°C			
2500±25%	600	400	250	360	530	480	420	390	180	100	60	60	13	9	6	7	≥230	4.9	4

* Typ.值

□μi频率特性 (Typ.)

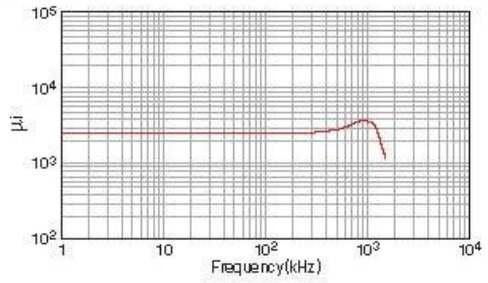

□μi温度特性 (Typ.)

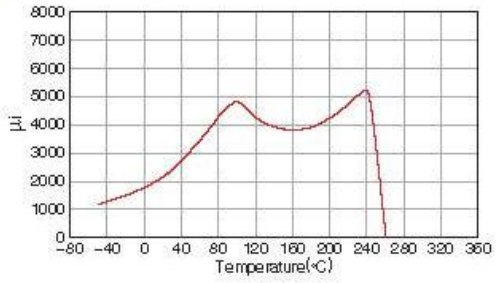

□B-H温度特性 (Typ.)

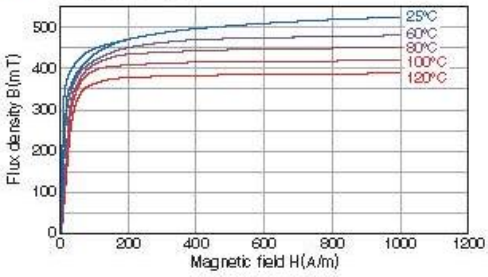

□磁心损耗 (Typ.)

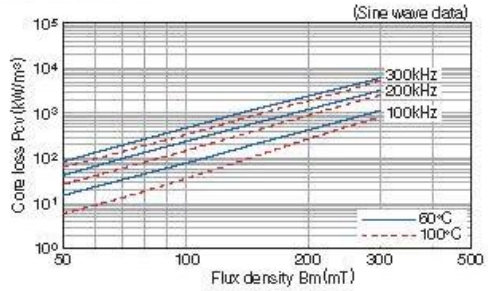

□磁心损耗的温度依赖性 (Typ.)

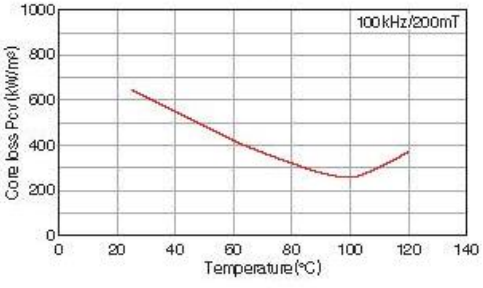

Customer	Qisda	Customer P/N	1J.20359.001	Spec Version	A7
Supplier	LI TAI	Maker P/N	PT-022686-3HR	Component Type	LQ2516

Form Version: 4.0

Winding Specification

➔ Winding List:

No	Winding No.	Terminal	Wire	Turns	Winding Rule
1	N1	1---13	2UEW ψ0.32 x1c	38	
2	N2	10---8	TIW-M ψ0.35x2c	11	
3	N3	9---7	TIW-M ψ0.35x2c	11	
4	N4	6---5	2UEW ψ0.22x2c	11	
5	N5	13---3	2UEW ψ0.22x2c	13	

➔ Schematic:

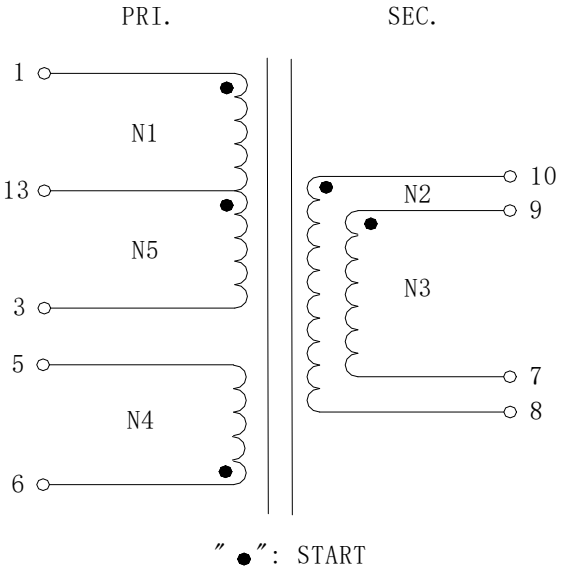

➔ Winding Order:

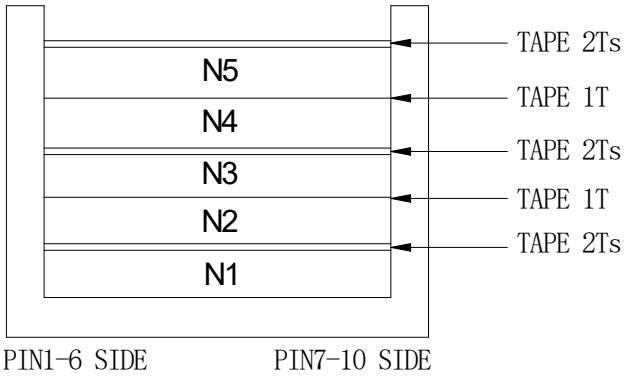

Customer	Qisda	Customer P/N	1J.20359.001	Spec Version	A7
Supplier	LI TAI	Maker P/N	PT-022686-3HR	Component Type	LQ2516

Form Version: 4.0

● Electrical Characteristics

Item	Test Terminal	Specification	Test Instrument
Inductance	L(1---3)	1000uH±7%	WAYKE KERR 3260B LCR METER/HP4129 @40KHz, 1V
Leakage Inductance (max)	LK(1---3) SEC SHORT	18.5uH MAX	
Q Value (min)	Q(1---3)	120 MIN	
DC BIAS 1.4 A	L(0A)*85% MIN		
D.C. Resistance @25℃	R(1---3)	670mΩ MAX.	CHEN HWA 502 OHM METER @25℃
	R(9,10---7,8)	50mΩ MAX.	
	R(6---5)	230mΩ MAX.	
Voltage Ratio(V) F=20KHz,1V	V(9,10---7,8)	216mV±5%	WAYKE KERR 3260B LCR METER/HP4129
	V(6---5)	216mV±5%	
Hi-Pot	PRI TO SEC	AC 3000V/3mA/1MIN	ZENTECH 9072A
	PRI&SEC TO CORE	AC 1500V/3mA/1MIN	
Insulation Resistance	COIL TO CORE	DC500V/100MΩ MIN	
	COIL TO COIL	DC500V/100MΩ MIN	
Current Rated	0.6A		
Operation Temp. Range	-20℃ ~ +130℃		
Storage Temp. Range	-20℃ ~ +60℃		

Customer	Qisda	Customer P/N	1J.20359.001	Spec Version	A7
Supplier	LI TAI	Maker P/N	PT-022686-3HR	Component Type	LQ2516

Form Version: 4.0

➔ Insulation System

Company	Description	UL No.
LI TAI ELECTRONIC ENTERPRISE CO., LTD	CLASS 130(B) CIS.04	E258545

● Material List

	No	Sub Part	Supplier	Description	Type	Flame/ Temp.	UL No.
*	1	CORE	FERROXCUBE	FERRITE CORE LQ2516	3C97	N/A	N/A
			TDK		PC47		
			TDG		TP4D		
	2	BOBBIN	SUMITOMO I group III *Thk. 0.51(min.)*	PHENOLIC	PM-9825	94V-0/ 150℃	E41429 (S)
			CHANG CHUN CTI group III Thk. 0.7(min.)	PHENOLIC	T200HF	94V-0/ 150℃	E59481 (S)
	3	WIRE	PACIFIC	POLYURETHANE	UEW/U	130℃	E201757
	4	TRIPLE WIRE 耐压: 3000 Vac Min Thk. 0.01(min.)	COSMOLINK	TRIPLE INSULATION WIRE	TIW-M	130℃	E213764
	5	TAPE CTI group II Thk. 0.05(min.)	SYMBIO	POLYETHYLENE	NO.35660 (a)	130℃	E50292
			YAHUA	POLYETHYLENE	NO. CT* Yellow (c)(g)	130℃	E165111
	6	VARNISH	ELANTAS ELECTRICAL INSULATION ELANTAS PDG INC	POLYESTER	V1380FC	130℃	E75225

Customer	Qisda	Customer P/N	1J.20359.001	Spec Version	A7
Supplier	LI TAI	Maker P/N	PT-022686-3HR	Component Type	LQ2516

Form Version: 4.0

	7	EPOXY	HUA CHUANG	BLACK HARD EPOXY	H907-HF	130℃	E304477
			HUA CHUANG	WHITE SOFT EPOXY	H907-HF-N	130℃	E304477
	8	PIN	WELL FORE	SOLDER 99.26% Sn 0.05% Ag 0.08% Cu,ECT	N/A	N/A	N/A
	9	TIN	SHI PIN	Lead Free Solder Sn98% Cu2%	N/A	N/A	N/A

* Safety concerned subparts.

Customer	Qisda	Customer P/N	1J.20359.001	Spec Version	A7
Supplier	LI TAI	Maker P/N	PT-022686-3HR	Component Type	LQ2516

Form Version: 4.0

- Package Specification

備註：包裝吸塑盒需符合 Qisda 自動化塑盤的定義

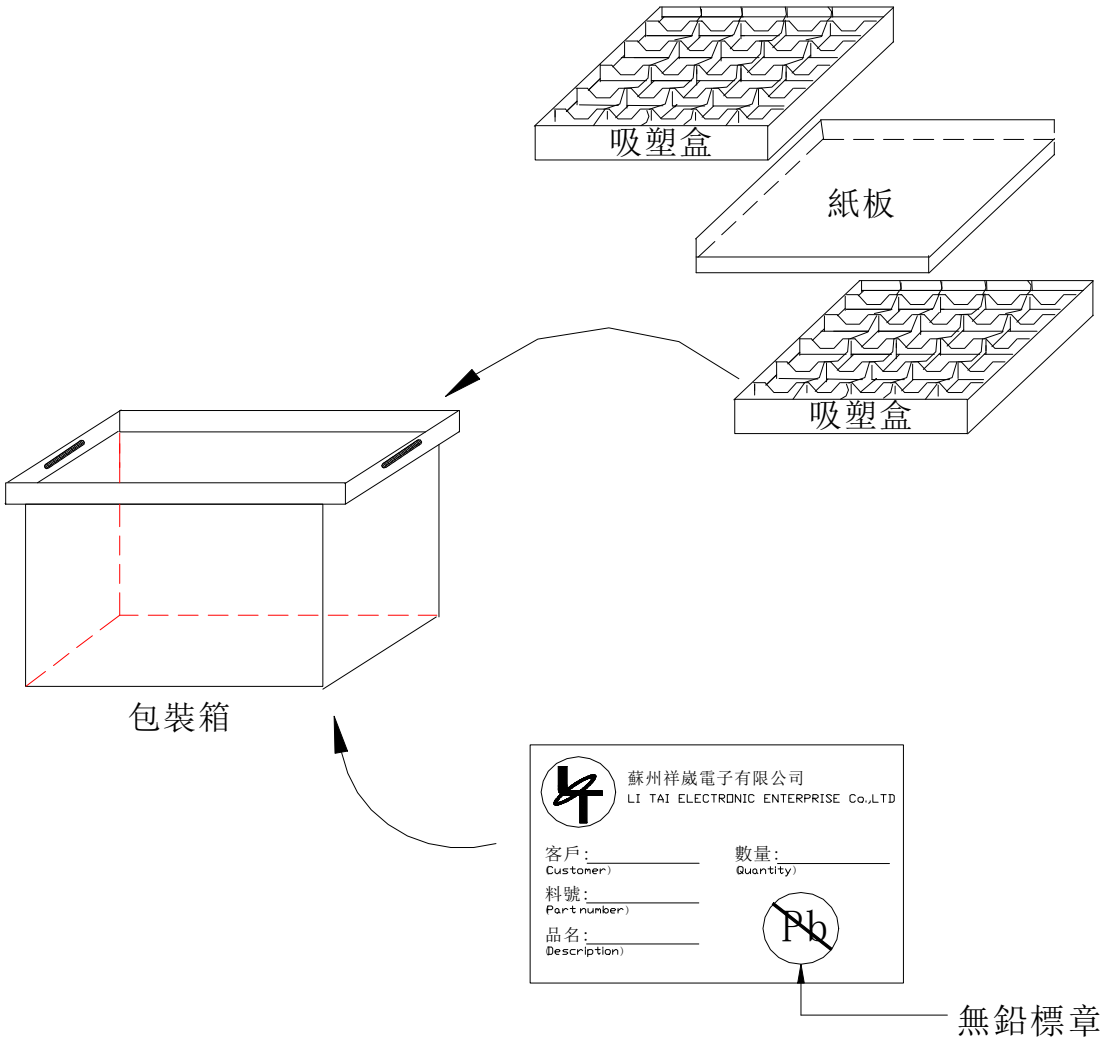

Customer	Qisda	Customer P/N	1J.20359.001	Spec Version	A7
Supplier	LI TAI	Maker P/N	PT-022686-3HR	Component Type	LQ2516

Form Version: 4.0

包裝箱外箱標籤說明：

A.Condition:

For the packing identification of standard shipment

B.Label specification:

Material : Copper plate

Dimension: 80*60 mm for SOT series

Back Glue: Acrylic Glue series

Color: Frame: White Character: Black

C. Bar Code Specification (Bar code printer is DATAMAX)

(1). Code: Regular Code 128(Auto)

(2). Parameter:

X Dimension: 9.8mil

Ratio: 300dpi(3 dots)

Height: 0.7cm.

(3).Character:

Type: Arial (For Bar code machine Datamax)

Right character size 12 (Packer, Pack Date, QC)

Pb character size 24

Qisda character size 20



D. Label Content:

(1). P/N: Part No.

(2). LOT NO.: Product Lot No.

(3). (Q)Quantity

(4). Product Date+Expire days: Assembly Date Code, Expire days

(5). (B): Customer Part No. Code,Li tai Code,D/C Code, Quantity

(6)ReellD: Li tai Code,Assembly Date Code, Manufacture Lot No.

(7) Pb : For Pb free package

(8) Qisda : Customer name

NOTE:（括弧內中文為解釋說明，紅線標注）

Customer	Qisda	Customer P/N	1J.20359.001	Spec Version	A7
Supplier	LI TAI	Maker P/N	PT-022686-3HR	Component Type	LQ2516

Form Version: 4.0

包裝盒嗲頭標籤說明：

A.Condition:

For the packing identification of shipping mark

B Label specification:

Material : Copper plate

Dimension: 20*60 mm for SOT series

Back Glue: Acrylic Glue series

Color: Frame: White Character: Black

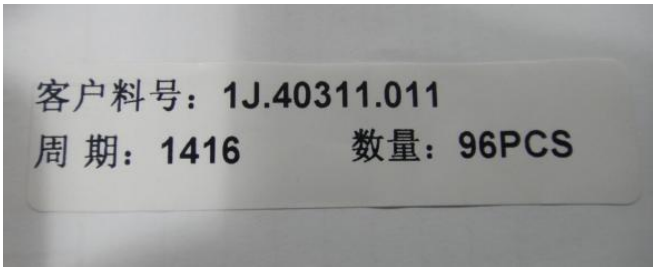

C. Bar Code Specification

(1). Code: Regular Code 128(Auto)

(2). Parameter:

X Dimension: 9.8mil

Ratio: 300dpi(3 dots)

Height: 0.7cm.

D. Label Content:

客户料号：Customer Part No.

周期：D/C

数量：Quantity

包裝箱外箱 QC 標籤：

A.Condition:

For the packing identification of QC. mark

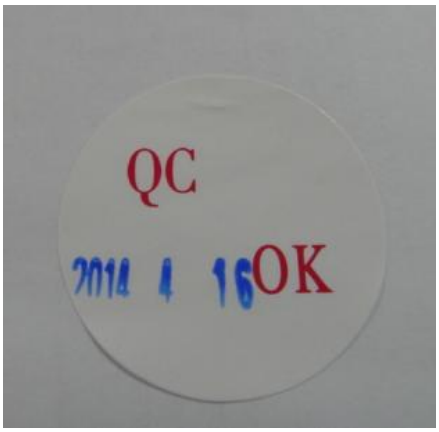

B Label specification:

Material : Copper plate

Dimension: Φ30.0mm series

Back Glue: Acrylic Glue series

Color: Frame: White Character: Red＆Blue

C Label Content:

QC OK：Quality Control Pass

Date：Assembly Date

Customer	Qisda	Customer P/N	1J.20359.001	Spec Version	A7
Supplier	LI TAI	Maker P/N	PT-022686-3HR	Component Type	LQ2516

Form Version: 4.0

● Reliability Criteria (Qisda Version :3.0)

Test item	Test condition (Test Method)	inspection criteria
高溫無負荷壽命測試 (Hi-temp unload life test)	Condition: 85±2°C Duration: 120 hours 96 Hrs (工厂例行性抽验)	1. 外觀：無腐蝕、裂痕、其他機械損傷線圈鐵芯裝配牢固 2. 電氣特性：在原 SPEC 要求之規格內
低溫無負荷壽命測試 (Low-temp unload life test)	Condition: -25℃ ± 2℃ Duration: 120 hours 96 Hrs (工厂例行性抽验)	1. 外觀：無腐蝕、裂痕、其他機械損傷線圈鐵芯裝配牢固 2. 電氣特性：在原 SPEC 要求之規格內
耐濕性無負荷試驗 (Humidity unload test)	Condition: 65℃ ± 2℃ Humidity: 90 to 95% RH Duration: 120 hours	1. 外觀：無腐蝕、裂痕、其他機械損傷線圈鐵芯裝配牢固 2. 電氣特性：在原 SPEC 要求之規格內
溫度循環試驗 (Thermal cycle test)	Cycle: 25+/-5℃/ 3-5 min --> -25+/-3℃/ 15 min --> 25+/-3℃/ 3-5 min --> 85+/-5℃/ 15 min Times: 100 Cycles 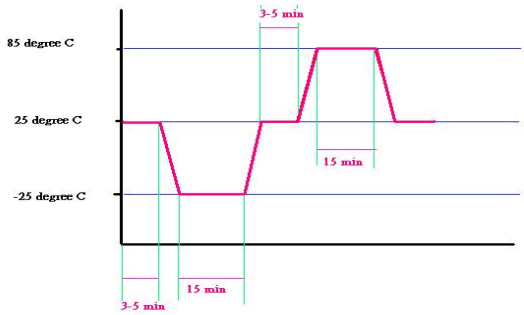	1. 外觀無斷裂,脫落,鬆動而且外觀無任何異常現象. 2. 電氣特性:在原 SPEC 規格內
焊錫耐熱性試驗 (Solder heat-resistance test) IR-Reflow or Wave solder	Pre-heating: 150±10℃ Time: 60 - 120 sec max Temperature: 260±5℃ max Time: 10 sec ±1 sec	1. 外觀：無腐蝕、裂痕，其他機械損傷,不能有焊錫不良,其焊錫面積需達到 95%. 2. 電氣特性：在原 SPEC 要求之規格內
焊錫附著性試驗 (Solderability test)	Temperature: 235±5℃ Time: 5±0.5 sec	1. 外觀：無斷裂、脫落而且外觀無任何異常現象 2. 焊錫面積需達到 95%

Customer	Qisda	Customer P/N	1J.20359.001	Spec Version	A7
Supplier	LI TAI	Maker P/N	PT-022686-3HR	Component Type	LQ2516

Form Version: 4.0

Test item	Test condition (Test Method)	inspection criteria
冷熱衝擊試驗 (Thermal shock test)	Cycle: -25℃ / 30 min -->100 ℃/ 30 min Times: 100 Cycles 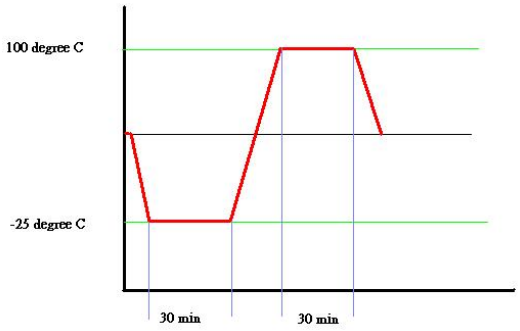	1. Inductance deviation within ±5.0%
振動試驗 (Vibration test)	Frequency:10 Hz --> 55 Hz --> 10Hz (for 1 min.) Time:6 hour Perpendicular directions (X,Y,Z)	1. 外觀;無裂痕,PIN 腳脫落與其他機械損傷. 2. 電性符合 SPEC 要求.
Solder Iron	Temperature: 390+/-10℃ Time: 4-5 sec	1. 外觀：無斷裂、脫落而且外觀無任何異常現象 2. 焊錫面積需達到 95%

Customer	Qisda	Customer P/N	1J.20359.001	Spec Version	A7
Supplier	LI TAI	Maker P/N	PT-022686-3HR	Component Type	LQ2516

Form Version: 4.0

● Qisda Check List

No	Check Point	Remark	Supplier Confirm (Pass or N/A)
1	2Pin 以上 Choke 類零件需注意防呆		N/A
2	Transformer 的繞組需加註繞法疏繞需注意是否需平均疏繞。走線槽位是否可避免傷到漆包線及是否與 Core 距離太近. 需注明走線方向順時針？逆時針？		PASS
3	Transformer 如果繞線太細（低於 0.04mm）， 外部需包 TAPE。		PASS
4	是否標示研磨 Core 位置(打點)		PASS
5	Transformer 出入線結線：不可超過 BOBBIN stand off Cut off PIN ：需與 BOBBIN stand off 齊平 		PASS
6	Power Transformer 限定常用 Core 廠商： Others :TDK、TDG、SAMWHA、FERROXCUBE（PHILIPS）、TOKIN、NICERA Projector: TDK、FERROXCUBE（PHILIPS）、TOKIN、NICERA		PASS
7	Material List 標註 UL No.		PASS
8	規格書中需注明測試設備（指定測試設備：HP-4284A）。 電感測試條件一般為：40KHz 1V Hi-pot 測試條件一般為：3mA/ 1min	如需 CHEN HWA 量測，則須比較二種設備誤差，將誤差值加入到實際測試值中	PASS
9	使用 Ring choke, 引腳出線處需加 Teflon tube，tube 至少深入至線包不會短路，不得低於 core 底部；底部需加 PCB 板，起固定隔離作用。		N/A
10	Choke 類電感外部加熱縮套管，需保證套管高於線圈		N/A
11	Chock 類電感線徑若≤0.6mm，則不能由銅線直接沾錫作為 PIN 腳，必須加底座		N/A

12	所有 Transformer 都要 "真空" 含浸，以防止異音及耐壓不足		PASS
13	Transformer 需廠商提供包裝方式，注意每層之間需加隔板，避免零件受擠壓		PASS
14	Ring Choke 的測試頻率需定義為 100KHz/1V		N/A
15	臥式 ER2828 所用 BOBBIN ,需在 BOBBIN 兩側貼 margin tape 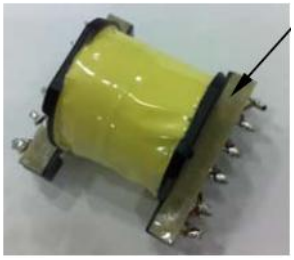		N/A
16	Transformer 需在規格書中定義:pin 腳需二次沾錫 (請確認剪腳處是否產生錫裂)		PASS
17	一二次側跨接的 power transformer，為保證其與 PCB 表面良好絕緣，要求：二次側需包 2 層膠布，成品外部再包 2 層膠布.具體如下圖 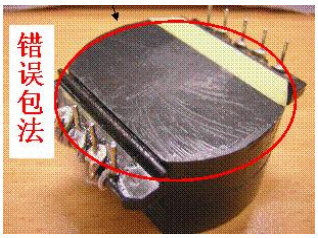 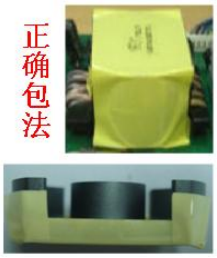		N/A

Customer	Qisda	Customer P/N	1J.20359.001	Spec Version	A7
Supplier	LI TAI	Maker P/N	PT-022686-3HR	Component Type	LQ2516

Form Version: 4.0

Qisda Format History

Date	Version	Change Notice	Owner
2010-12-3	V1.0	Org	Jeremy Jong
2011-1-3	V2.0	1.Add Qisda Logo 2.Add Power Transformer 限定常用 Core 廠商 (NICERA) 3.Reliability 設為必須符合條件	Jeremy Jong
2012-04-16	V3.0	1. Add photo for final sample. 2. Add Core dimension drawing. 3. Update material list form with thickness.	Carol.Sung
2027-07-28	V4.0	1. Maker Factory：製造廠商 並需詳列生產地/地址/電話 2. 製程/工藝要求: 需詳列於 NOTE (點膠/塗膠: 需有圖片+說明) 3. 請附 Bobbin Dimension/Material ; Material List 中各家 Core Dimension /Spec. 4. 請落實 Reliability Criteria 與逐項確認填寫 Qisda: SA Check List 5. 此承認書 檔名 rule: Maker-Qisda P/N-Spec+SA checklist	Carol.Sung