REV	DATE	DESCRIPTION	DRAFT	APPROVED
0	Sep-30-26	INITIAL RELEASE	KANE	

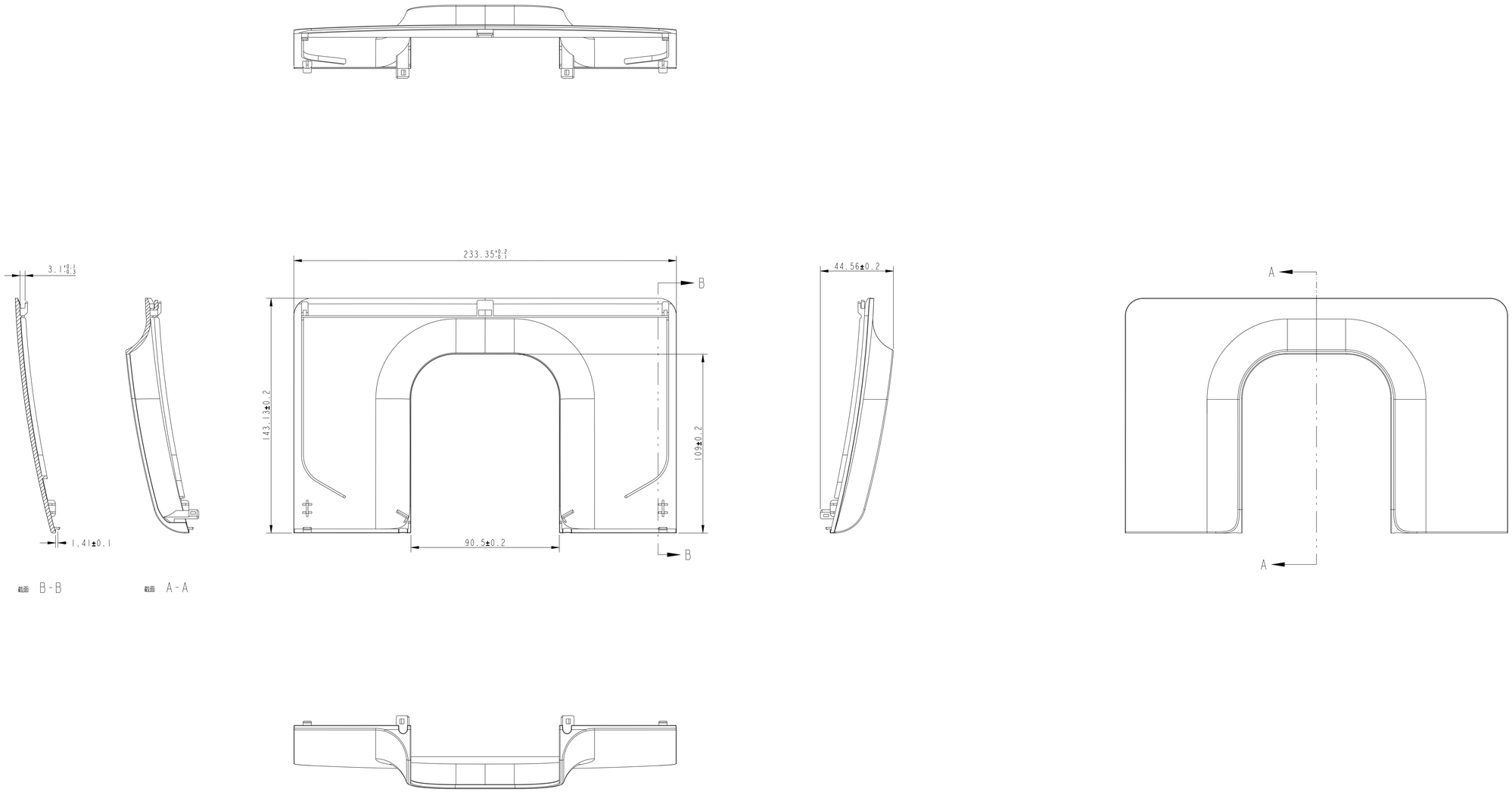

截面 B-B

截面 A-A

NOTE:
1. RESIN MATERIAL: PC+ABS, BAYBLEND FR3010.
2. RESIN COLOR: ARCTIC WHITE,190400.
3. FINISH COLOR: ARCTIC WHITE,190400.
4. TEXTUER: MT-11010.
5. GENERALLY WALL THICKNESS: 2.5 mm.
6. REMOVE ALL BURRS & SHARP EDGES.
6. WARPAGE AND FLATNESS TOLERANCE : <2.0 mm.
7. NON-DIMENSIONED GEOMETRY: SEE 3D FILE.
8. PACKING : EPE FOAM BAG.
9. RoHS COMPLIANT.
10. DIVA QC INSPECTION DOCUMENT NO.: QWI-020 (Plastic)

UNLESS OTHERWISE SPECIFIED ALL DIMENSIONS ARE IN MM. TOLERANCES:
.X ± 0.5
.XX ± 0.25
.XXX ± 0.125
ANGLE ± 0.1°
INTERPRET DIM AND TOL PER ASME Y14.5-2009

THIRD ANGLE PROJECTION

MATERIAL:	FINISH:	DIVA Laboratories. Ltd.			
DRAWN BY: KANE	Sep-30-26	PART NAME:			
CHECKED BY:		PART NUMBER:		MFG. PART NUMBER	
APPROVED BY:		MODEL NAME:	SIZE: A0	SCALE: 1:2	SHEET: 1 OF 1 REV 0
Crea FILE NAME: KEIN_ZIA_CABLE_CONT.KZ	APPROVED NO.:				

THIS DOCUMENT IS SUPPLIED IN CONFIDENCE. NO REPRODUCTION OF THIS DOCUMENT IN PART OR IN WHOLE OR PARTICULAR TO THE CLIENT SHOWN MAY BE MADE WITHOUT THE COPYRIGHT OWNER'S WRITTEN PERMISSION.

ASME STANDARD.WM