REV.	DATE	DESCRIPTION	BY	APVD
A	2025/4/29	PRODUCTION RELEASE	Owen	Laslie
B	2026/11/11	ADJUSTMENT OF CABLE OUTLET SLOT DIMENSIONS (B)	Owen	Laslie

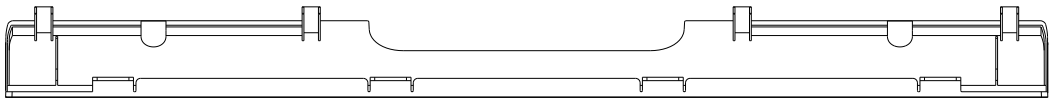

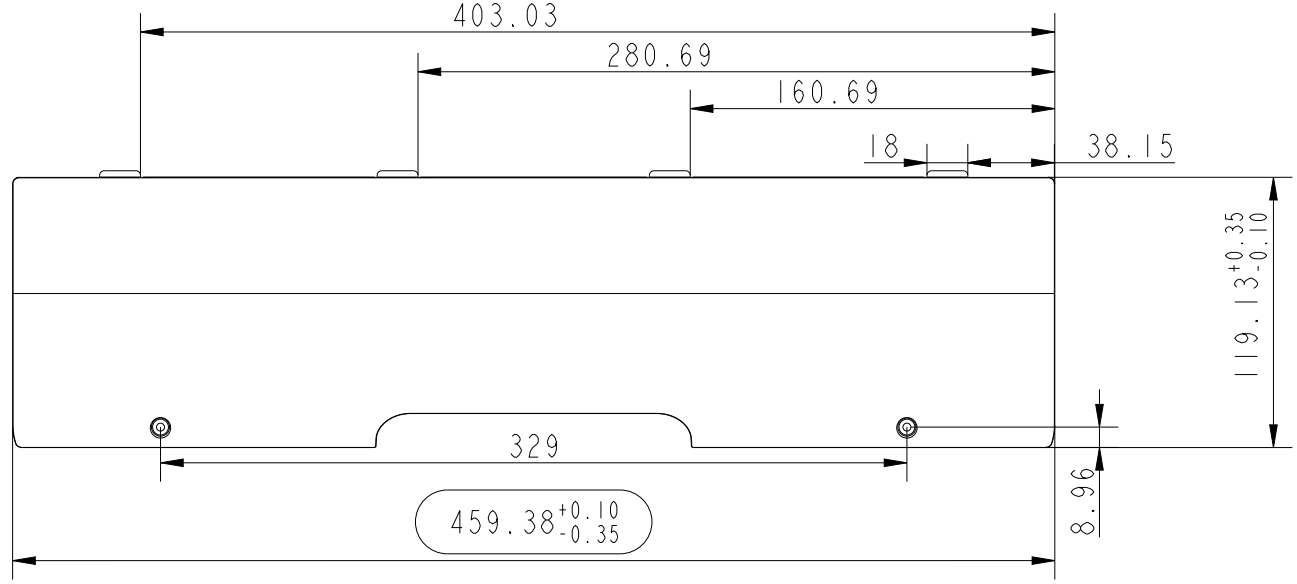

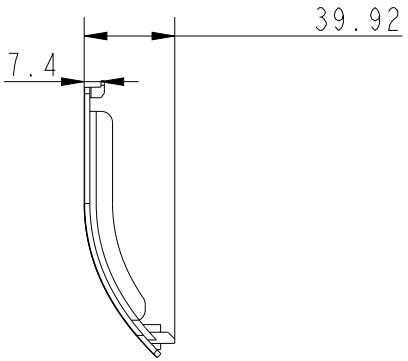

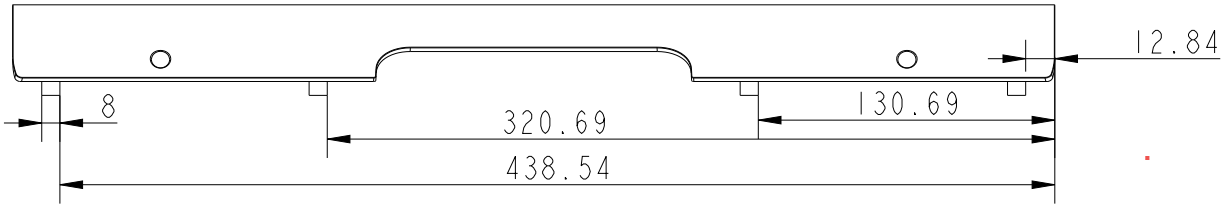

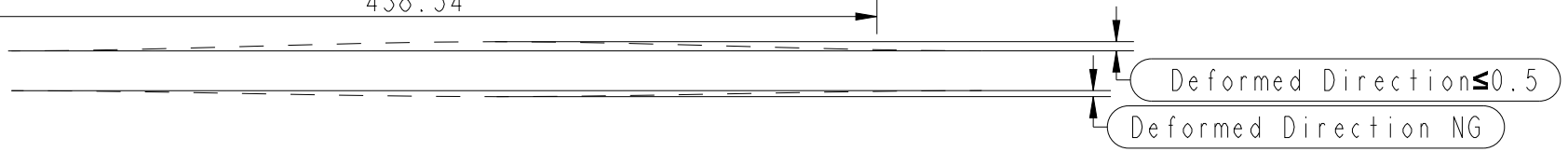

1. 材質 ：PC+ABS (Bayer FR3010) 防火V0 T=2.5
2. 表面處理 ： 咬花 ， MT-11010
3. 未標註的拔模角以不會拉模角度爲主其餘以0.5度製作
4. 所有外觀面不允許有縮水痕，結合痕與刮傷與PL線
5. 膠口與頂針痕須低於該平面0.05mm
6. 未標註的倒圓角以自然R角0.2mm製作
7. 同心度公差爲± 0.05 mm
8. 標有" O "符號爲重要尺寸
9. 未標示公差尺寸，請參考一般公差表
10. 圖面未標示尺寸處，請參考3D圖檔
11. 所有表面無油污

(B)

PART NO.	COLOR	CNC CUT AREA	REMARK
3MD622P2010	White, N9	N/A	(M3474)
3MD622P2020	Black, 5816	N/A	(M3474)
3MD622P2030	GREY-RAL7004	N/A	(M3474)
3MD622P2040	GREY-RAL7004	SEE SHEET 2/2	

RANGE OF DIMENSION	TOLERANCE CLASS DESIGNATION f	V m	V c
UP TO 30	±0.10	±0.20	±0.50
ABOVE 30~120	±0.15	±0.30	±0.80
ABOVE 120~315	±0.20	±0.50	±1.20
ABOVE 315~1000	±0.30	±0.80	±2.00
ANGLE ±1° (±1.75/100)			

THIRD ANGLE PROJECTION

DSGD by	Owen	2025/4/29	
CHK by			
APVD by	Laslie	2025/4/29	
APVD NO.:		3D FILE NAME: 0277_000_IO_COVER_ME	

UNITS:mm	SCALE: 1/1	SHEET: 1 OF 2	MODEL NO.:
MATERIAL: PC+ABS		TREATMENT:	

PART NAME: IO COVER (PC270434R(RGD2773AM11-P))

PART NO.: See Table | REV. B

DIVA Laboratories ,Ltd.

REV.	DATE	DESCRIPTION	BY	APVD

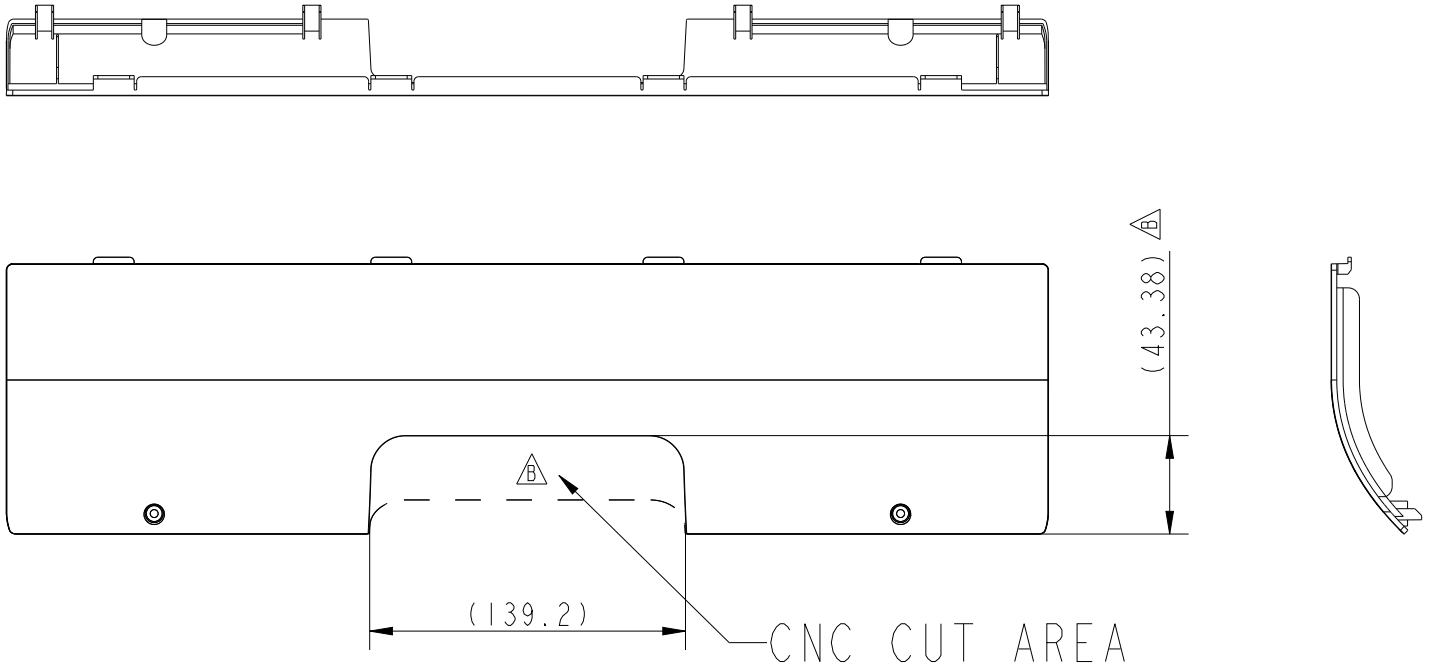

1. 材質 ：PC+ABS (Bayer FR3010) 防火V0 T=2.5
2. 表面處理 ： 咬花 , MT-11010
3. 未標註的拔模角以不會拉模角度爲主其餘以0.5度製作
4. 所有外觀面不允許有縮水痕, 結合痕與刮傷與PL線
5. 膠口與頂針痕須低於該平面0.05mm
6. 未標註的倒圓角以自然R角0.2mm製作
7. 同心度公差爲± 0.05 mm
8. 標有" O "符號爲重要尺寸
9. 未標示公差尺寸, 請參考一般公差表
10. 圖面未標示尺寸處, 請參考3D圖檔
11. 所有表面無油污

B

PART NO.	COLOR	CNC CUT AREA	REMARK
3MD622P2010	White, N9	N/A	(M3474)
3MD622P2020	Black, 5816	N/A	(M3474)
3MD622P2030	GREY-RAL7004	N/A	(M3474)
3MD622P2040	GREY-RAL7004	SEE SHEET 2/2	

RANGE OF DIMENSION	TOLERANCE CLASS DESIGNATION f	V m	V c
UP TO 30	±0.10	±0.20	±0.50
ABOVE 30~120	±0.15	±0.30	±0.80
ABOVE 120~315	±0.20	±0.50	±1.20
ABOVE 315~1000	±0.30	±0.80	±2.00
ANGLE ±1° (±1.75/100)			

THIRD ANGLE PROJECTION

DSGD by	Owen	Nov-11-26	
CHK by			
APVD by	Laslie	Nov-11-26	
APVD NO.:		3D FILE NAME: 0277_000_IO_COVER_ME	

UNITS:mm	SCALE: 1/1	SHEET: 2 OF 2	MODEL NO.:
MATERIAL: PC+ABS		TREATMENT:	
PART NAME: IO COVER (PC270434R(RGD2773AM11-P))			
PART NO.: SEE TABLE		REV. B	
DIVA Laboratories ,Ltd.			