特採單

Deviation Acceptance Request ☑入料 □出貨

廠商/客戶 Vendor/Customer	安馳	特採編號 Acceptance No.	20230616-01
料號/成品料號 Material No./Product No.	3AXC7A15T1Y	特採日期 Deviation Acceptance Date	2023/6/16
品名/成品型號 Description/Model Name	IC (XC7A15T-2CSG324C,FPGA,XILINX)	入料/出貨日期 Incoming/Shipping Date	2023/6/1
需求單位 Annowncing dept.	RD	入出貨數量/特採數量 Incoming Shipping Q'ty/Deviation Acceptance Q'ty	50pc / 50pc

特採原因 Reason for DA:

使用在Philips RUG5513AMI DVI board WS stage, 後續在進行承認.

風險評估原則 Risk assessment rule:

1. 功能影響(25%)：潛在威脅造成功能影響的嚴重度，低40、高75
2. 暴露可能(40%)：潛在威脅發生時被客戶發現或造成製造流程中問題的可能性，中低40、高75
3. 價值因素(35%)：潛在威脅造成產品/品牌價值下降或提高重工時間成本的可能性，中低40、高75

單位 Department	風險說明欄 Risk Details	功能影響 (25%)	暴露可能 (40%)	價值因素 (35%)	風險總分	簽署 Signature	主管 Leader
業務單位 Sales	No Risk	40	40	40	40	Estela 0616 1145	陳冠華 0616 1145
PM單位 PM	No risk	40	40	40	40	Amber 0616 1140	0616
採購單位 Procurement	No risk	40	40	40	40	0616	
RD單位 Research and Development	No risk	40	40	40	40	Lewis 0616 1130	Jaky 0616 1140
PE單位 Engineering	No Risk	40	40	40	40	0616 1145	0616 1150
QA單位 Quality Assurance	No Risk	40	40	40	40	0616 Kelly	0616

備註Remark:

1.進料特採單位: 採購/RD/PM/PE/QA，得視情況排除非相關業務需求的單位
2.出貨特採單位: Sales/RD/PM/PE/QA。得視情況排除非相關業務需求的單位

風險總分：	廠務主管簽章: Plant Director sign:	裁決Result: □特採Accept □挑選Sorting □重工Rework □退貨Reject
□存在高於60分者，需廠務主管進行裁決 □皆低於60分者，不需廠務主管進行裁決		意見Comment:

風險總分列表

40 / 40 / 40 = 40	40 / 40 / 75 = 52.25	75 / 40 / 40 = 48.75	75 / 40 / 75 = 61
40 / 75 / 40 = 54	40 / 75 / 75 = 66.25	75 / 75 / 40 = 62.75	75 / 75 / 75 = 75

The Spartan-7 FPGA ordering information is shown in Figure 1. Refer to the Package Marking section of UG475, *7 Series FPGAs Packaging and Pinout* for a more detailed explanation of the device markings.

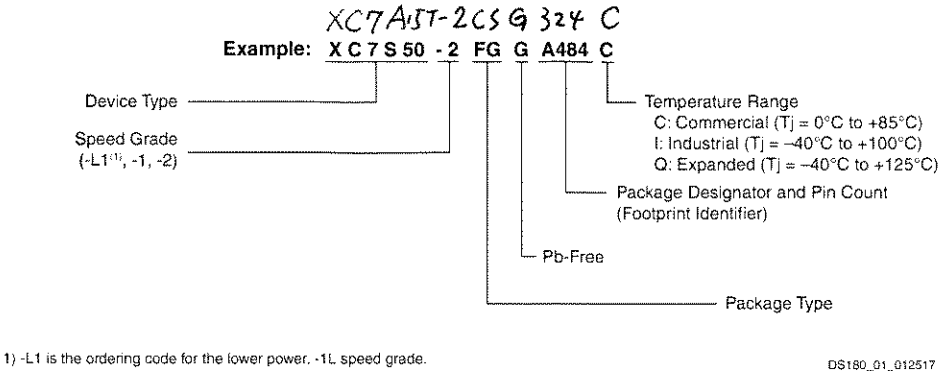

Figure 1: **Spartan-7 FPGA Ordering Information**

The Artix-7, Kintex-7, and Virtex-7 FPGA ordering information, shown in Figure 2, applies to all packages including Pb-Free. Refer to the Package Marking section of UG475, *7 Series FPGAs Packaging and Pinout* for a more detailed explanation of the device markings.

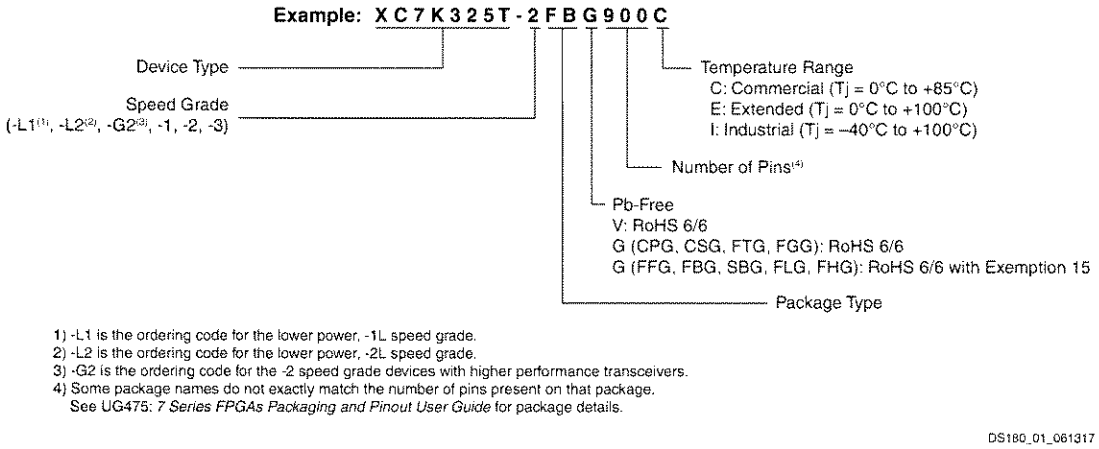

Figure 2: **Artix-7, Kintex-7, and Virtex-7 FPGA Ordering Information**