小型铝电解电容器
MINIATURE ALUMINUM ELECTROLYTIC CAPACITORS

◆引线型铝电解电容器的产品型号体系／LEAD WIRE TYPE PART NUMBER

□□□	□□□□	□□□□□	□	□□□	□□	D×L
额定电压 Rated Voltage	系列名称 Series	静电容量 Capacitance	静电容量允许差 Capacitance Tolerance	副记号 Option	引线加工记号 Lead Forming	铝壳尺寸 Case Size

Rated Voltage (V)	Code
6.3	6.3
10	10
25	25
100	100

Cap. (μF)	Code
0.1	0R1
0.47	0R47
1	1
10	10
1000	1000

Tolerance	Code
±20%	M

EFC
etc

TA, KC,
CA etc

请参照第46～48页
Shown in P46～48

5×11
10×12.5
12.5×40

在订货时，请注明额定电压、系列名称、静电容量、引线加工、铝壳尺寸的信息。
Please indicate the above information, when you inquire.

例）: Example

• 长引线品 Long lead type	50	PX	2R2	M	EFC	5×11
• 编带品 Taping type	35	ZLJ	220	M	TA	8×16

◆副记号／OPTION

请确认各系列的页面。
Please confirm each series page.

◆贴片型铝电解电容器的产品型号体系／CHIP TYPE PART NUMBER

□□□	□□□□	□□□□□	□	□□□	D×L
额定电压 Rated Voltage	系列名称 Series	静电容量 Capacitance	静电容量允许差 Capacitance Tolerance	副记号 Option	铝壳尺寸 Case Size

Rated Voltage (V)	Code
6.3	6.3
10	10
25	25
100	100

Cap. (μF)	Code
4.7	4R7
220	220
3300	3300

Tolerance	Code
±20%	M

4×6.1
8×10.5
16×21.5

在订货时，请注明额定电压、系列名称、静电容量、铝壳尺寸的信息。
Please indicate the above information, when you inquire.

例）: Example

35 TZV 330 M 10×10.5

包装规格／PACKAGING SPECIFICATION

◆引线端子型／LEAD WIRE TYPE

Q'ty (pcs)

产品尺寸 SIZE (mm)		长引线品 LONG LEAD		引线加工品 LEAD FORMING		编带品 TAPING
		散装 BULK PACKAGE	盒装 ALIGNED PACKAGE	散装 BULK PACKAGE	盒装 ALIGNED PACKAGE	
φ4	4×5	5,000	–	5,000	–	2,000
	4×7	5,000	–	5,000	–	2,000
φ5	5×5	5,000	–	5,000	–	2,000
	5×7	5,000	–	5,000	–	2,000
	5×11	3,000	–	5,000	–	2,000
φ6.3	6.3×5	3,000	–	5,000	–	2,000
	6.3×7	3,000	–	5,000	–	2,000
	6.3×9	2,000	–	3,000	–	2,000
	6.3×11	2,000	–	3,000	–	2,000
	6.3×15	2,000	–	3,000	–	2,000
	6.3×25	1,000	–	1,000	–	–
	6.3×30	1,000	–	1,000	–	–
	6.3×40	1,000	–	1,000	–	–
	6.3×50	1,000	–	1,000	–	–
φ8	8×5	3,000	–	5,000	–	1,000
	8×7	3,000	–	5,000	–	1,000
	8×7.5	2,000	–	2,000	–	1,000
	8×9	2,000	–	2,000	–	1,000
	8×10.8	2,000	–	2,000	–	1,000
	8×11.5	2,000	–	2,000	–	1,000
	8×16	1,000	–	1,000	–	1,000
	8×20	1,000	–	1,000	–	1,000
	8×23	1,000	–	1,000	–	1,000
	8×25	–	500	–	500	–
	8×30	–	500	–	500	–
	8×35	–	500	–	500	–
	8×40	–	500	–	500	–
	8×45	–	500	–	500	–
	8×50	–	500	–	500	–
	8×55	–	500	–	500	–
	8×60	–	500	–	500	–
φ10	10×9	1,000	–	1,000	–	500
	10×10	1,000	–	1,000	–	500
	10×12.5	1,000	–	1,000	–	500
	10×16	1,000	–	1,000	–	500
	10×20	1,000	–	1,000	–	500
	10×23	1,000	–	1,000	–	500
	10×25	1,000	500	1,000	500	500
	10×28	1,000	500	1,000	500	500
	10×30	–	500	–	500	–
	10×35	–	500	–	500	–
	10×40	–	500	–	500	–
	10×45	–	500	–	500	–
	10×50	–	500	–	500	–
	10×55	–	500	–	500	–
	10×60	–	500	–	500	–

产品尺寸 SIZE (mm)		长引线品 LONG LEAD		引线加工品 LEAD FORMING		编带品 TAPING
		散装 BULK PACKAGE	盒装 ALIGNED PACKAGE	散装 BULK PACKAGE	盒装 ALIGNED PACKAGE	
φ12.5	12.5×16	1,000	–	1,000	500	500
	12.5×20	1,000	500	1,000	500	500
	12.5×25	1,000	500	1,000	500	500
	12.5×30	600	500	600	500	500
	12.5×35	600	500	600	500	500
	12.5×40	600	500	600	500	500
	12.5×45	–	500	–	500	–
	12.5×50	–	500	–	500	–
	12.5×55	–	500	–	500	–
	12.5×60	–	500	–	500	–
φ14.5	14.5×20	–	500	–	500	–
	14.5×25	–	500	–	500	–
	14.5×30	–	500	–	500	–
	14.5×31.5	–	500	–	500	–
	14.5×35	–	500	–	500	–
	14.5×40	–	500	–	500	–
	14.5×45	–	500	–	500	–
	14.5×50	–	500	–	500	–
φ16	16×16	600	–	600	400	250
	16×20	600	200	600	400	250
	16×25	600	200	600	400	250
	16×30	–	200	–	200	250
	16×31.5	–	200	–	200	250
	16×35	–	200	–	200	250
	16×35.5	–	200	–	200	250
	16×40	–	200	–	200	250
	16×45	–	200	–	200	–
	16×50	–	200	–	200	–
φ18	18×16	500	–	–	200	250
	18×20	500	200	–	200	250
	18×25	500	200	–	200	250
	18×30	–	200	–	200	250
	18×31.5	–	200	–	200	250
	18×35	–	200	–	200	250
	18×35.5	–	200	–	200	250
	18×40	–	200	–	200	250
	18×45	–	200	–	200	–
	18×50	–	200	–	200	–

包装单位存在与上述相异的情况。
There are some differences between actual package quantity and above list.
关于散装与盒装并记的尺寸，以盒装作为出口用的标准。
For the sizes stated both bulk and aligned package, aligned package is standard for exporting carton.

小型铝电解电容器
MINIATURE ALUMINUM ELECTROLYTIC CAPACITORS

◆编带规格/TAPING SPECIFICATIONS

◆纵向引线形 (04形) 编带形状尺寸图/DIMENSIONS

Fig.1

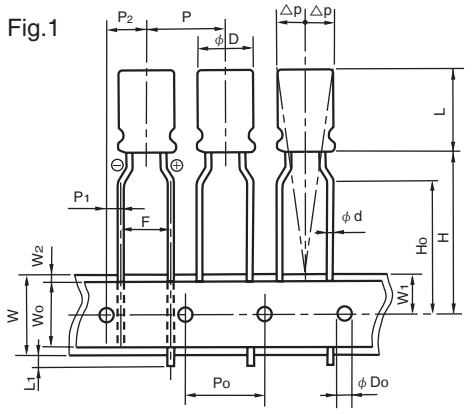

Fig.2

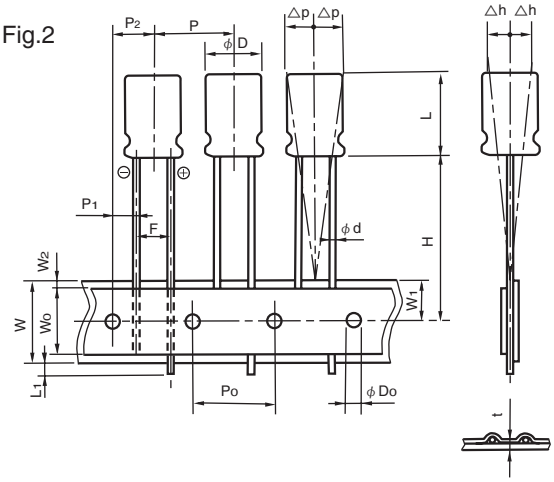

◆规格表/SPECIFICATION TABLE

(mm)

项　目 Items	记号 Code	5mm Height		7mm or 7.5mm Height				允许差 Tolerance
		φ4～φ8		φ4～φ6.3	φ4～φ6.3	φ8		
引线加工记号 Taping code		T5	TZ	T5	TZ	TA	T7	
形状尺寸图 Applicable Fig. No.		Fig.2	Fig.1	Fig.2	Fig.1	Fig.1	Fig.2	
引线直径 Dia. of lead	φd	0.45		0.45				±0.05
主体高度 Height of body	L	6.5		8.5				MAX
主体间距 Distance from center to center of next body	P	12.7		12.7				±1.0
穿孔间距 Distance from center to center of next driving hole	P_0	12.7		12.7				±0.2
穿孔与引线间距 Distance between center of driving hole and lead	P_1	5.1	3.85	5.1	3.85		4.6	±0.5
穿孔与主体间距 Distance between center of driving hole and body	P_2	6.35		6.35				±1.0
引线间距 Pitch of lead	F	2.5	5.0	2.5	5.0		3.5	+0.8 −0.2
衬纸宽度 Width of mounting tape	W	18.0		18.0				±0.3
胶带宽度 Width of adhesive tape	W_0	5.0		5.0				MIN
穿孔与衬纸间距 Distance between center of driving hole and mounting tape edge	W_1	9.0		9.0				±0.5
胶带与衬纸间距 Max. allowable distance between mounting and adhesive tape edges	W_2	1.5		1.5				MAX
主体下方位置 Distance between center of driving hole and bottom of body	H	17.5		17.5		20.0		±0.75
引线弯曲高度 Distance between center of driving hole and clinch part of lead	H_0	—	16.0	—	16.0		—	±0.5
引线头 End of lead	L_1	0.5		0.5				MAX
穿孔直径 Dia. of driving hole	φD_0	4.0		4.0				±0.2
主体倾斜度 Off alignment of body top	△h	1.0		1.0				MAX
主体倾斜度 Off alignment of body top	△p	1.0		1.0				MAX
编带总厚度 Sum of thickness for mounting and adhesive tape without lead dia	t	0.6		0.6				±0.3
包装数量（个） Quantity (pcs)		2000 (φ8:1000)						

Fig.3

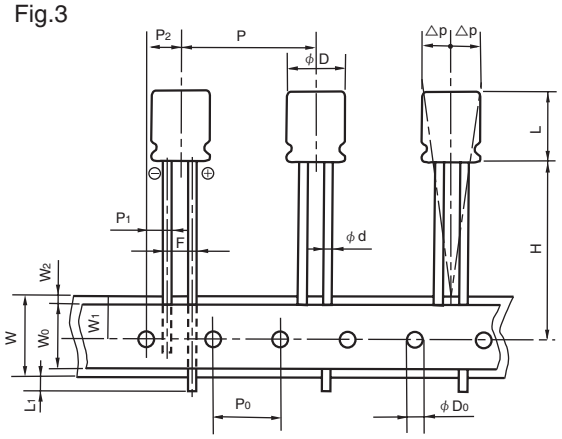

◆规格表／SPECIFICATION TABLE

(mm)

项　　目 Items	记 号 Code	9mm or more Height							※ 允 许 差 Tolerance
		φ5，φ6.3		φ8		φ10	φ12.5	φ16	φ18	
引线加工记号 Taping code		T1	TA	TA	T7	T8	G4	GC		
形状尺寸图 Applicable Fig. No.		Fig.2	Fig.1	Fig.1	Fig.2	Fig.2	Fig.2	Fig.3		
引线直径 Dia. of lead	φd	0.5		0.6				0.8		±0.05
主体高度 Height of body	L	13.0		22.0		30.0	42.0			MAX
主体间距 Distance from center to center of next body	P	12.7					15.0	30.0		±1.0
穿孔间距 Distance from center to center of next driving hole	P_0	12.7					15.0	15.0±0.3		±0.2
穿孔与引线间距 Distance between center of driving hole and lead	P_1	5.1	3.85		4.6	3.85	5.0	3.75		±0.5
穿孔与主体间距 Distance between center of driving hole and body	P_2	6.35					7.5			±1.0
引线间距 Pitch of lead	F	2.5	5.0		3.5	5.0±0.8		7.5±0.8		+0.8 −0.2
衬纸宽度 Width of mounting tape	W	18.0								±0.3
胶带宽度 Width of adhesive tape	W_0	5.0								MIN
穿孔与衬纸间距 Distance between center of driving hole and mounting tape edge	W_1	9.0								±0.5
胶带与衬纸间距 Max. allowable distance between mounting and adhesive tape edges	W_2	1.5								MAX
主体下方位置 Distance between center of driving hole and bottom of body	H	18.5		20.0		$18.5^{+0.75}_{-0.5}$				±0.75
引线弯曲高度 Distance between center of driving hole and clinch part of lead	H_0	—	16.0		—	—				±0.5
引线头 End of lead	L_1	0.5								MAX
穿孔直径 Dia. of driving hole	φD_0	4.0								±0.2
主体倾斜度 Off alignment of body top	△h	1.0								MAX
主体倾斜度 Off alignment of body top	△p	1.0								MAX
编带总厚度 Sum of thickness for mounting and adhesive tape without lead dia	t	0.6								±0.3
包装数量（个） Quantity (pcs)		2000		1000		500		250		

※容许差有特别规定时，特别规定优先。
※For the case that tolerance is specified individually,the value shall have the priority.

◆LEAD CUTTING FORMING SPECIFICATIONS

Rubycon provides lead-formed and lead-cut products to facilitate mounting on printed circuit boards, as well as products with leads specially processed (kink formed) for self supporting insertions to printed circuit boards.

·Lead forming

(φ5～φ8)
Lead forming code : FA

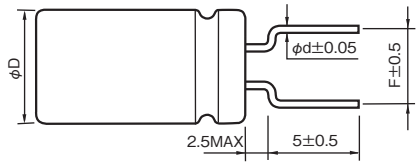

(mm)

φD	5	6.3	8
φd	0.5		0.6
F	5.0		

·Lead cutting

(φ5～φ18)
Lead cutting code : CA
CC
CE

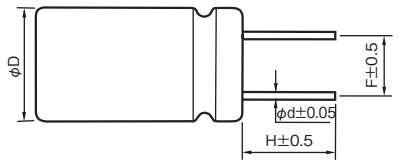

(mm)

φD	5	6.3	8	10	12.5	14.5	16	18
H	5.0 ····· (CA) 4.0 ····· (CC) 3.5 ····· (CE)							
φd	0.5		0.6			0.8		
F	2.0	2.5	3.5	5.0		7.5		

·Kinked lead forming

(φ5～φ8)
Kinked lead forming code : KC

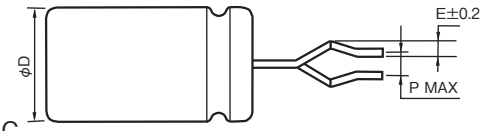

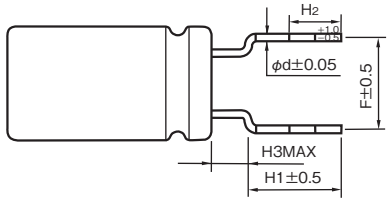

·Kinked lead cutting

(φ10～φ18)
Kinked lead cutting code : KC

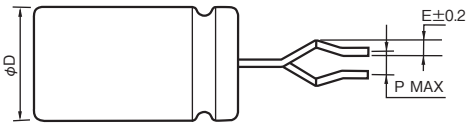

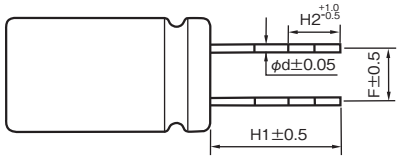

(mm)

φD	5	6.3	8	10	12.5	14.5	16	18
H1	4.5							
H2	2.8							
H3	2.5			——				
F	5.0					7.5		
P	1.0							
E	1.2			1.3				
φd	0.5		0.6			0.8		

·(φ10～φ18)／Low profile with horizontal mounting

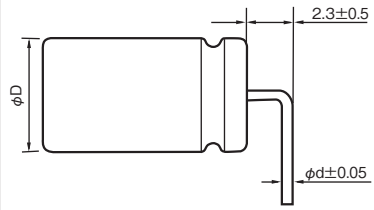

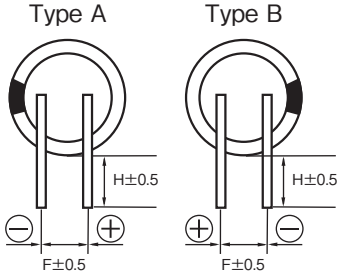

(mm)

φD	10, 12.5				14.5, 16, 18			
Code	RI	RK	RX	SG	RI	RK	RX	SG
φd	0.6				0.8			
F	5.0				7.5			
H	4.0		3.5		4.0		3.5	
Type	A	B	A	B	A	B	A	B