Doc. Number :

☐ Tentative Specification
☐ Preliminary Specification
■ Approval Specification

MODEL NO.: R238HCM
SUFFIX: L03

Customer:

APPROVED BY **SIGNATURE**

Name / Title _____ _____

Please return 1 copy for your confirmation with your signature and comments.

Approved By	Checked By	Prepared By
陳立錚	張喻翔	周麗芬

copyright belongs to InnoLux. Any unauthorized use is prohibited.

CONTENTS

1. GENERAL DESCRIPTION 5
1.1 OVERVIEW 5
1.2 GENERAL SPECIFICATIONS 5
2. MECHANICAL SPECIFICATIONS 5
3. ABSOLUTE MAXIMUM RATINGS 6
3.1 ABSOLUTE RATINGS OF ENVIRONMENT 6
3.2 ELECTRICAL ABSOLUTE RATINGS 7
3.2.1 TFT LCD MODULE 7
3.2.2 CONVERTER CIRCUIT FOR BACKLIGHT UNIT 7
4. ELECTRICAL SPECIFICATIONS 7
4.1 FUNCTION BLOCK DIAGRAM 7
4.2. INTERFACE CONNECTIONS 8
4.3 ELECTRICAL CHARACTERISTICS 11
4.3.1 LCD ELETRONICS SPECIFICATION 11
4.3.2 VCC POWER DIP CONDITION 13
4.3.3 BACKLIGHT UNIT 13
4.3.4 CONVERTER ELECTRICAL CHARATERISTICS 13
4.3.5 CONVERTER INPUT CONNECTOR PIN ASSIGNMENT 14
4.4 LVDS INPUT SIGNAL SPECIFICATIONS 15
4.4.1 LVDS DATA MAPPING TABLE 15
4.4.2 COLOR DATA INPUT ASSIGNMENT 16
4.5 DISPLAY TIMING SPECIFICATIONS 17
4.6 POWER ON/OFF SEQUENCE 19
5. OPTICAL CHARACTERISTICS 20
5.1 TEST CONDITIONS 20
5.2 OPTICAL SPECIFICATIONS 20
6. RELIABILITY TEST ITEM 23
7. PACKAGING 24
7.1 PACKING SPECIFICATIONS 24
7.2 PACKAGING METHOD 24
7.3 UN-PACKAGING METHOD 25
8. INNOLUX MODULE LABEL 26
9. PRECAUTIONS 26
9.1 ASSEMBLY AND HANDLING PRECAUTIONS 26
9.2 STORAGE PRECAUTIONS 27

copyright belongs to InnoLux. Any unauthorized use is prohibited.

9.3 OPERATION PRECAUTIONS 27
9.4 SAFETY PRECAUTIONS 27
9.5 SAFETY STANDARDS 27
9.6 OTHER 27
APPENDIX. OUTLINE DRAWING 28

copyright belongs to InnoLux. Any unauthorized use is prohibited.

REVISION HISTORY

Version	Date	Page	Description
2.0	10, May, 2022	All	Approval Specification was first issued.

copyright belongs to InnoLux. Any unauthorized use is prohibited.

1. GENERAL DESCRIPTION

1.1 OVERVIEW

R238HCM-L03 is a 23.8” TFT Liquid Crystal Display module with high contrast ratio, WLED Backlight unit and 51 pins 2ch-LVDS interface. This module supports 1920 x 1080 Full HD mode and can display up to 16.7M colors.

1.2 GENERAL SPECIFICATIONS

Item	Specification	Unit	Note
Screen Size	23.8” real diagonal		
Driver Element	a-si TFT active matrix	-	-
Pixel Number	1920 x R.G.B. x 1080	pixel	-
Pixel Pitch	0.2745 (H) x 0.2745 (V)	mm	-
Pixel Arrangement	RGB vertical stripe	-	-
Display Colors	16.7M	color	-
Transmissive Mode	Normally black	-	-
Surface Treatment	AG type	-	-
Luminance, White	350	cd/m2	
Color Gamut	99.3% of sRGB (Typ.)	-	
ROHS,Halogen Free	ROHS, Halogen Free compliance	-	
Power Consumption	Total 54.64 W(Typ.) @cell 11.04 W (Typ.), CNV 43.6 W (Typ.)		(1)

Note (1) The specified power consumption : Total= cell (reference 4.3.1)+BL (reference 4.3.3)

2. MECHANICAL SPECIFICATIONS

Item		Min.	Typ.	Max.	Unit	Note
Module Size	Horizontal (H)	554.7	555.2	555.7	mm	(1)
	Vertical (V)	324.1	324.6	325.1	mm	
	Thickness (T)	21.4	21.9	22.4	mm	
Bezel Area	Horizontal	529.7	530.2	530.7	mm	
	Vertical	299.1	299.6	300.1	mm	
Active Area	Horizontal	-	527.04	-	mm	
	Vertical	-	296.46	-	mm	
Weight		2820	2942	3060	g	

Note (1) Please refer to the attached drawings for more information of front and back outline dimensions.

Note (2)

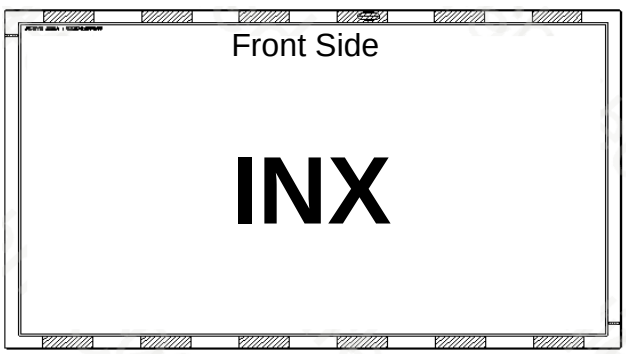

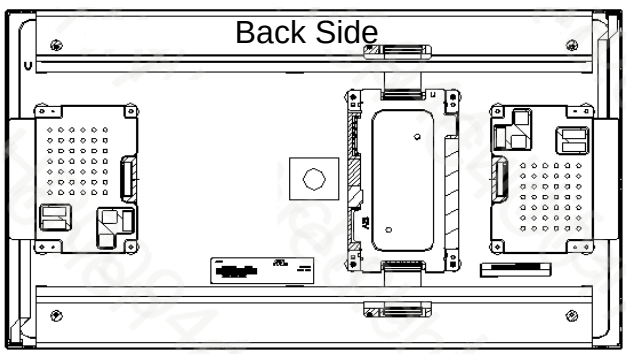

copyright belongs to InnoLux. Any unauthorized use is prohibited.

3. ABSOLUTE MAXIMUM RATINGS

3.1 ABSOLUTE RATINGS OF ENVIRONMENT

Item	Symbol	Value		Unit	Note
		Min.	Max.		
Storage Temperature	TST	-20	60	ºC	(1)
Operating Ambient Temperature	TOP	0	40	ºC	(1), (2)

Note (1)

(a) Storage Environment: :90 %RH Max.

Operating Environment: 80 %RH Max

(b) Wet-bulb temperature should be 39 ºC Max.

(c) No condensation.

Note (2) Panel surface temperature should be 0℃ min. and 65℃ max under Vcc=12.0V, Input fr =60Hz, typical LED string current, 25℃ ambient temperature, and no humidity control. Any condition of ambient operating temperature, the surface of active area should be keeping not higher than 65℃.

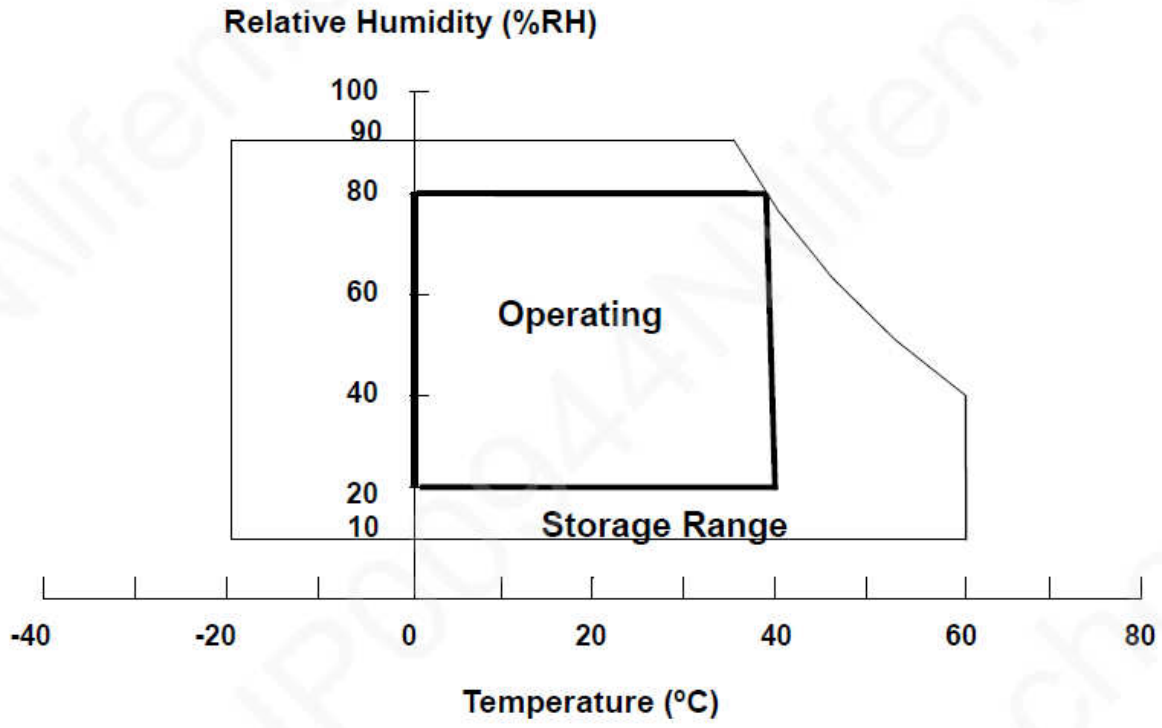

copyright belongs to InnoLux. Any unauthorized use is prohibited.

3.2 ELECTRICAL ABSOLUTE RATINGS

3.2.1 TFT LCD MODULE

Item	Symbol	Value		Unit	Note
		Min.	Max.		
Power Supply Voltage	VCC_12V	-0.3	13.5	V	(1)

3.2.2 CONVERTER CIRCUIT FOR BACKLIGHT UNIT

Item	Symbol	Value			Unit	Note
		Min.	Typ	Max.		
Input Voltage	V_i	-0.3	24.0	26.4	V	(1), (2)
Enable Voltage	EN	-0.3	3.3	5.5	V	
Backlight Adjust	ADJ	-0.3	3.3	5.5	V	

Note (1) Permanent damage to the device may occur if maximum values are exceeded. Function operation should be restricted to the conditions described under Normal Operating Conditions.

Note (2) Specified values are for input pin of LED light bar at Ta=25±2 ℃ (Refer to 4.3.3 and 4.3.4 for further information).

4. ELECTRICAL SPECIFICATIONS

4.1 FUNCTION BLOCK DIAGRAM

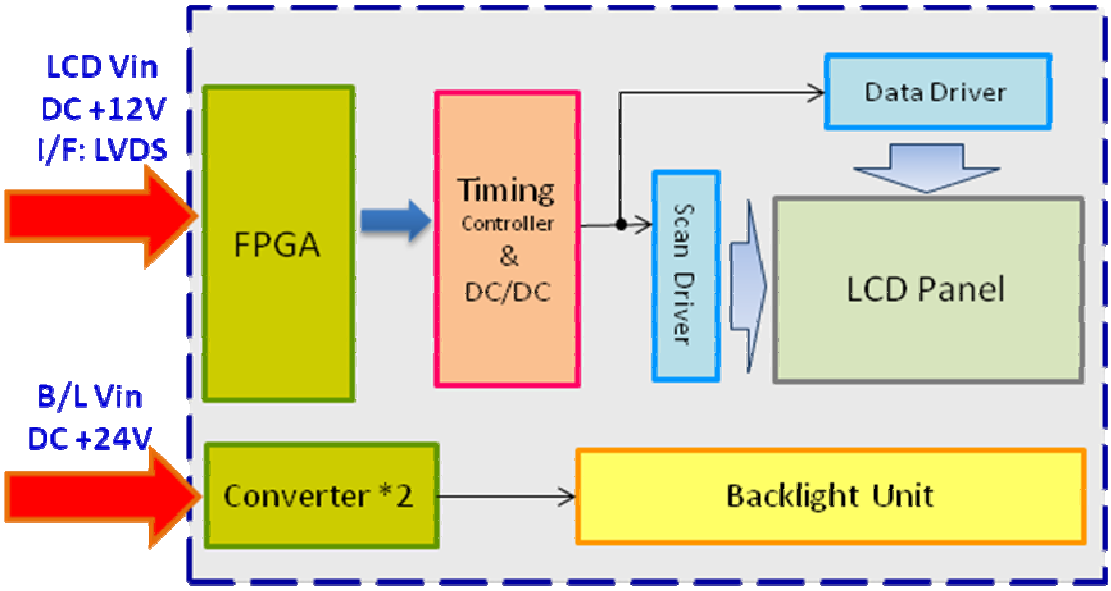

copyright belongs to InnoLux. Any unauthorized use is prohibited.

4.2. INTERFACE CONNECTIONS

<LCD MODULE INTERFACE PIN ASSIGNMENT>

Pin	Name	Description
1	NC	For LCD internal use only, Do not connect
2	NC	For LCD internal use only, Do not connect
3	NC	For LCD internal use only, Do not connect
4	NC	For LCD internal use only, Do not connect
5	NC	For LCD internal use only, Do not connect
6	NC	For LCD internal use only, Do not connect
7	NC	For LCD internal use only, Do not connect
8	NC	For LCD internal use only, Do not connect
9	NC	For LCD internal use only, Do not connect
10	NC	For LCD internal use only, Do not connect
11	GND	Ground
12	RXE0-	Negative LVDS differential data input. Channel E0 (even)
13	RXE0+	Positive LVDS differential data input. Channel E0 (even)
14	RXE1-	Negative LVDS differential data input. Channel E1 (even)
15	RXE1+	Positive LVDS differential data input. Channel E1 (even)
16	RXE2-	Negative LVDS differential data input. Channel E2 (even)
17	RXE2+	Positive LVDS differential data input. Channel E2 (even)
18	GND	Ground
19	RXEC-	Negative LVDS differential clock input. (even)
20	RXEC+	Positive LVDS differential clock input. (even)
21	GND	Ground
22	RXE3-	Negative LVDS differential data input. Channel E3 (even)
23	RXE3+	Positive LVDS differential data input. Channel E3 (even)
24	NC	For LCD internal use only, Do not connect
25	NC	For LCD internal use only, Do not connect
26	NC	For LCD internal use only, Do not connect
27	NC	For LCD internal use only, Do not connect
28	RXO0-	Negative LVDS differential data input. Channel O0 (odd)
29	RXO0+	Positive LVDS differential data input. Channel O0 (odd)
30	RXO1-	Negative LVDS differential data input. Channel O1 (odd)
31	RXO1+	Positive LVDS differential data input. Channel O1 (odd)
32	RXO2-	Negative LVDS differential data input. Channel O2 (odd)
33	RXO2+	Positive LVDS differential data input. Channel O2 (odd)
34	GND	Ground
35	RXOC-	Negative LVDS differential clock input. (odd)
36	RXOC+	Positive LVDS differential clock input. (odd)
37	GND	Ground
38	RXO3-	Negative LVDS differential data input. Channel O3(odd)
39	RXO3+	Positive LVDS differential data input. Channel O3 (odd)
40	NC	For LCD internal use only, Do not connect

copyright belongs to InnoLux. Any unauthorized use is prohibited.

Pin	Name	Description
41	NC	For LCD internal use only, Do not connect
42	NC	For LCD internal use only, Do not connect
43	NC	For LCD internal use only, Do not connect
44	GND	Ground
45	GND	Ground
46	GND	Ground
47	GND	Ground
48	NC	For LCD internal use only, Do not connect
49	NC	For LCD internal use only, Do not connect
50	NC	For LCD internal use only, Do not connect
51	NC	For LCD internal use only, Do not connect

Note (1) Connector Part No.:

P-TWO:187059-51221 or FCN:WF23-402-5133 or equivalent.

Note (2) User's connector Part No:

Mating Wire Cable Connector Part No.: JAE FI-RE51HL

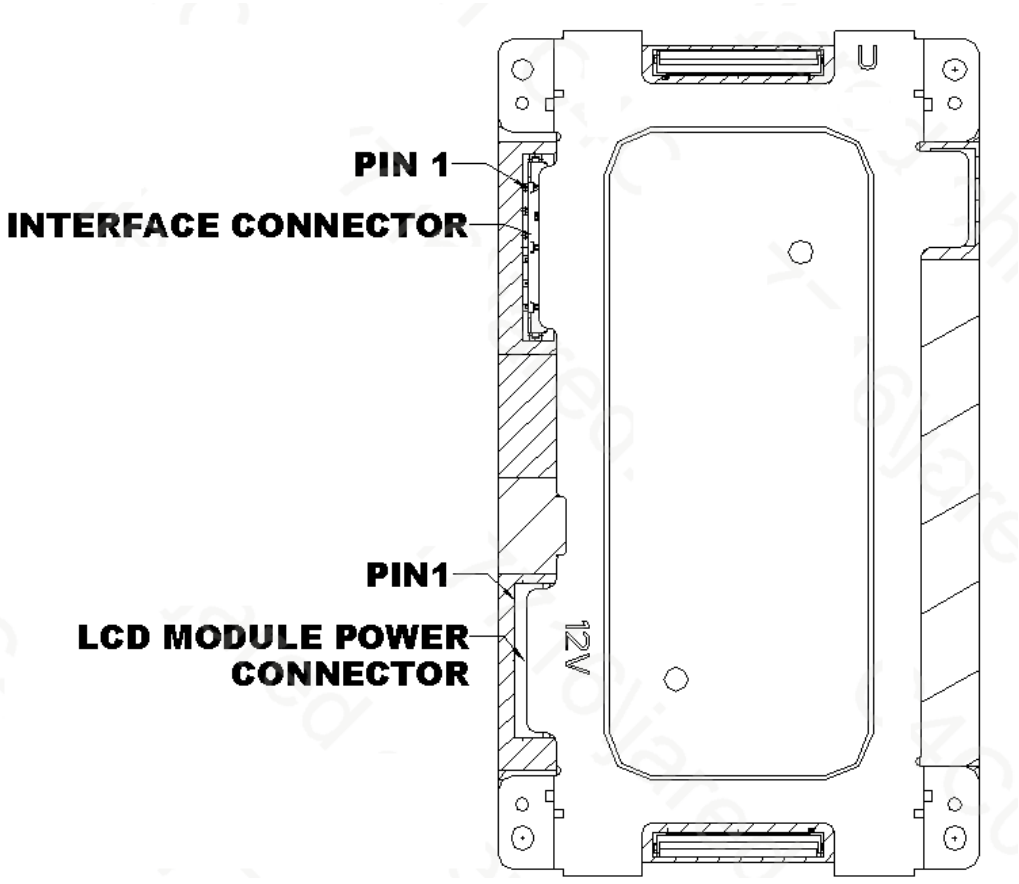

Figure 4-2

copyright belongs to InnoLux. Any unauthorized use is prohibited.

Note (3) The first pixel is odd.

Note (4) Input signal of even and odd clock should be the same timing.

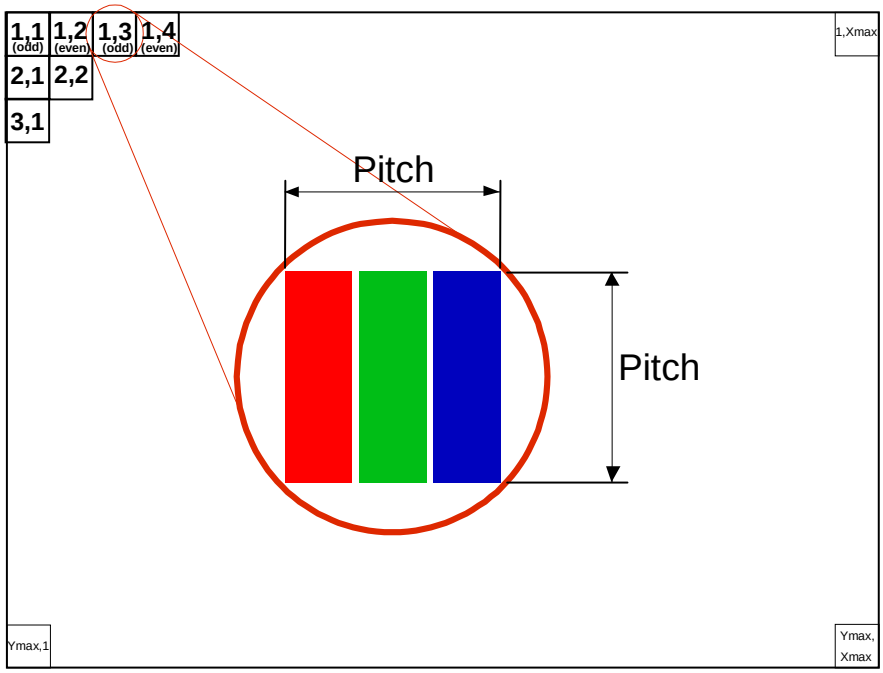

Note (5) ESD pin discharge susceptibility is ±5kV. Please make sure of electrostatic protection during assembly and operation.

<LCD MODULE POWER PIN ASSIGNMENT>

Connector Part No.: CviLux :CI0114M1HR0-LA-NH or FCN: JH2-D4-143N or equivalent. (Refer to Figure 4-2)

Pin	Name	Description
1	VCC	DC 12.0V power supply
2		
3		
4		
5		
6		
7		
8	GND	Ground
9		
10		
11		
12		
13		
14		

copyright belongs to InnoLux. Any unauthorized use is prohibited.

4.3 ELECTRICAL CHARACTERISTICS

4.3.1 LCD ELETRONICS SPECIFICATION

Parameter		Symbol	Value			Unit	Note
			Min.	Typ.	Max.		
Power Supply Voltage		Vcc	10.8	12.0	13.2	V	-
Ripple Voltage		V_{RP}	-	-	300	mV	-
Rush Current		I_{RUSH}	-	-	4	A	(2)
Power Supply Current	White	-	-	0.92	1.12	A	(3)a
	Black	-	-	0.69	0.83	A	(3)b
	Vertical Stripe	-	-	0.88	1.06	A	(3)c
Power Consumption		PLCD	-	11.04	13.44	Watt	(4)
LVDS differential input voltage		Vid	100	-	600	mV	
LVDS common input voltage		Vic	1.0	1.2	1.4	V	
LVDS Logic High Input Voltage		VIH	-	-	0.1	V	
LVDS Logic Low Input Voltage		VIL	-0.1	-		V	

Note (1) The ambient temperature is Ta = 25 ± 2 ºC.

Note (2) Measurement Conditions:

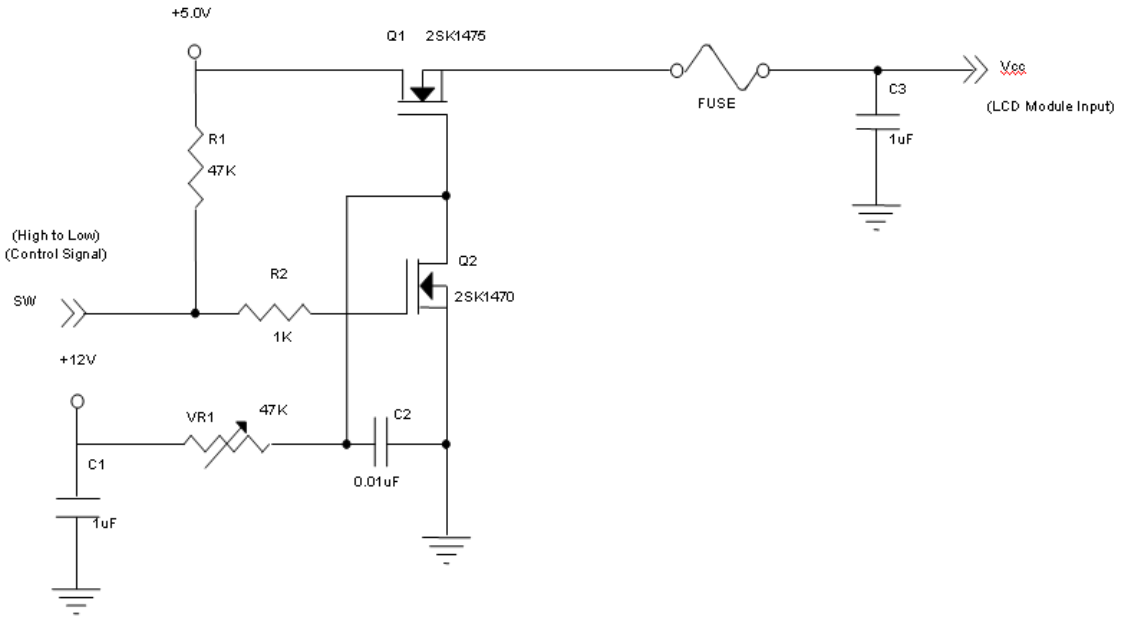

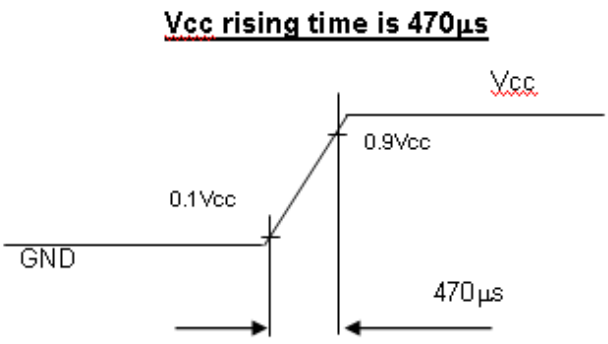

copyright belongs to InnoLux. Any unauthorized use is prohibited.

Note (3) The specified max power supply current is under the conditions at Vcc = 12.0 V, Ta = 25 ± 2 ºC, Fr = 60Hz, whereas a power dissipation check pattern below is displayed.

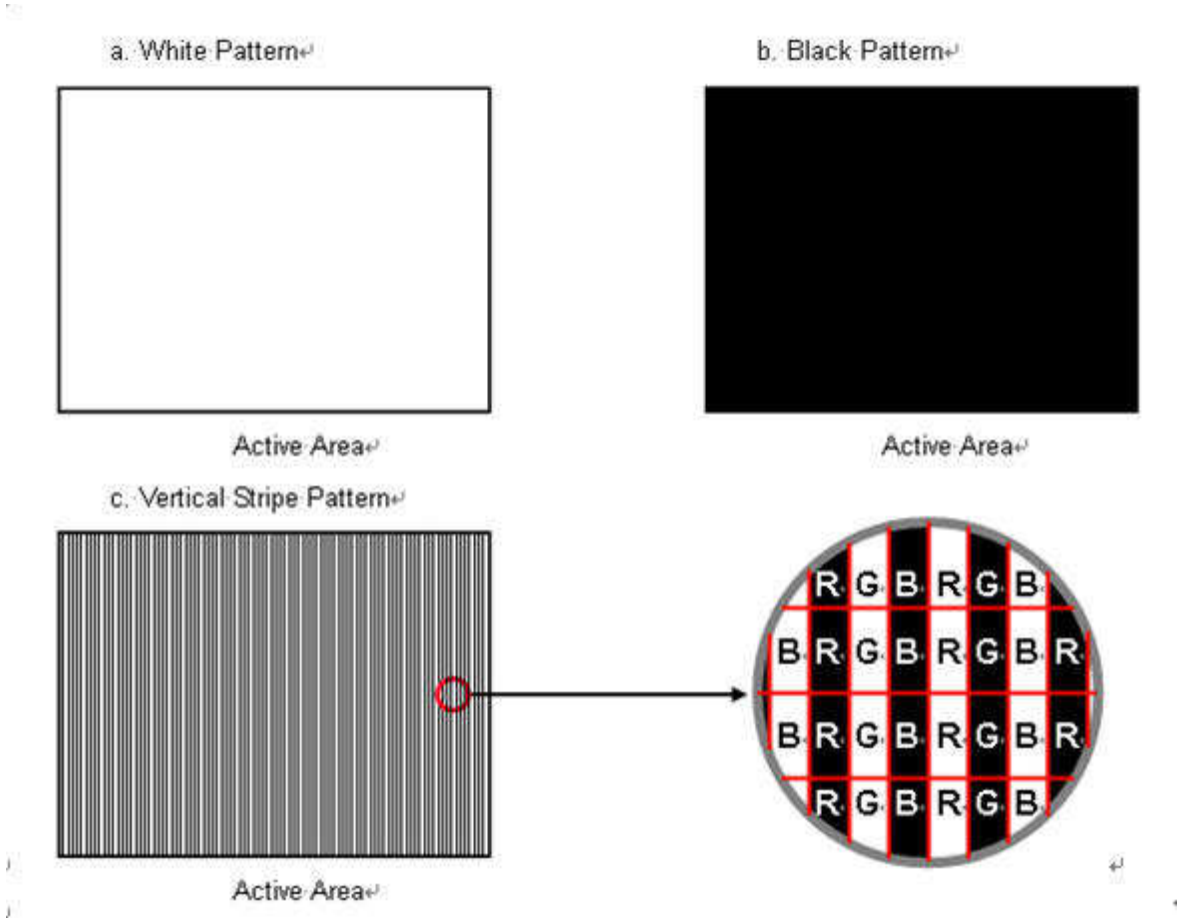

Note (4) The power consumption is specified at the pattern with the maximum current.

Note (5) VID waveform condition

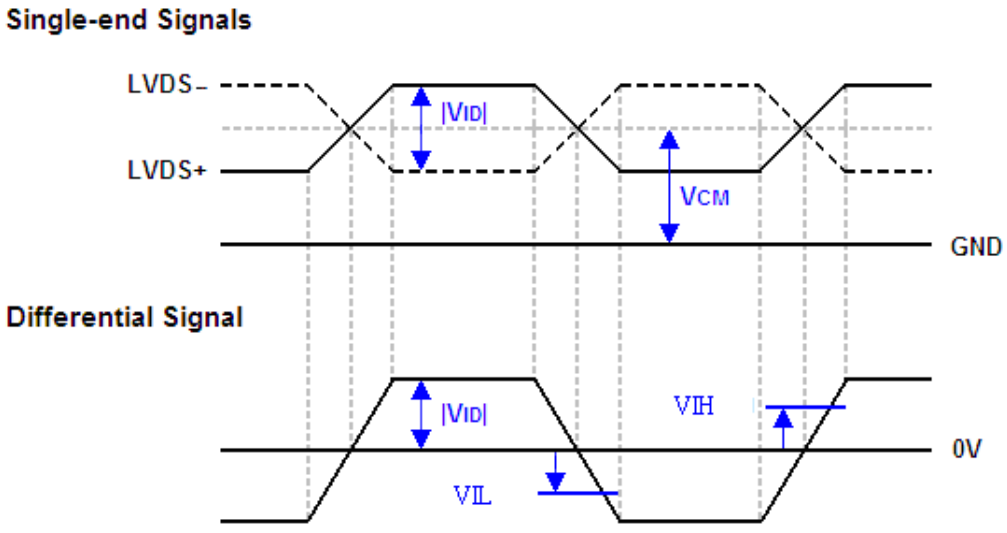

copyright belongs to InnoLux. Any unauthorized use is prohibited.

4.3.2 VCC POWER DIP CONDITION

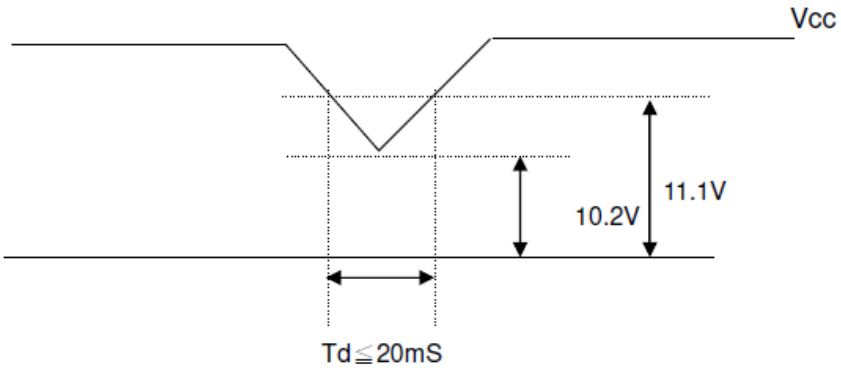

Dip condition:10.2V≦Vcc≦11.1V, Td≦20ms

4.3.3 BACKLIGHT UNIT

Parameter	Symbol	Value			Unit	Note
		Min.	Typ.	Max.		
LED Life Time	LLED	50000			Hrs	(1)

Note (1) The lifetime of LED is estimated data and defined as the time when it continues to operate under the conditions at Ta = 25 ±2 ℃ until the brightness becomes ≦ 50% of its original value. Operating LED under high temperature environment will reduce life time and lead to color shift

4.3.4 CONVERTER ELECTRICAL CHARATERISTICS

Ta = 25 ± 2 ºC

Parameter		Symbol	Value			Unit	Note
			Min.	Typ.	Max.		
Converter Power Supply Voltage		V_i	21.6	24.0	26.4	V	(Duty 100%)
Converter Power Supply Current		I_i	-	1.82	2.16	A	@ Vi = 24V (Duty 100%)
Converter inrush current		I_{IRUSH}	-	-	3.0	A	@ Vi rising time=20ms (Vi=24V)
Input Power Consumption		P_i	-	43.6	51.8	W	@ Vi = 24V (Duty 100%)
BL Control Level	Backlight on	EN	2.5	3.3	5.0	V	
	Backlight off		0	0	0.2	V	
SEL Control Level	SEL High Level	SEL	2.5	3.3	5.0	V	DC dimming
	SEL Low Level		0	0	0.2	V	PWM dimming
DC Control Level	DC High Level	DC dimming	-	-	0	V	Negative dimming
	DC Low Level		3	-	-	V	
PWM Control Level	PWM High Level	E_PWM	2.5	3.3	5.0	V	Positive dimming
	PWM Low Level		0	0	0.2	V	
PWM Control Frequency		f_{PWM}	100	200	1,000	Hz	(1), Suggestion@200Hz
PWM Noise Range		VNoise	-	-	0.1	V	
PWM Control Duty Ratio		fPWM	5	-	100	%	(1),@100Hz≦fPWM<500Hz
			10	-	100	%	(1), @500Hz≦fPWM≦1kHz

copyright belongs to InnoLux. Any unauthorized use is prohibited.

Note (1) At 100 ~499Hz PWM control frequency, duty ratio range is restricted from 5% to 100%.

At 500 ~1kHz PWM control frequency, duty ratio range is restricted from 10% to 100%.

If PWM control frequency is applied in the range 1KHZ above, The “non-linear” phenomenon on the Backlight Unit may be found. So It’s a suggestion that PWM control frequency should be less than **1K**Hz.

4.3.5 CONVERTER INPUT CONNECTOR PIN ASSIGNMENT

Connector Part No.: CviLux :CI0114M1HR0-LA-NH or FCN: JH2-D4-143N or equivalent.

Pin	Name	Description
1	V_{BL}	DC 24V power supply
2		
3		
4		
5		
6	GND	Ground
7		
8		
9		
10		
11	DC dimming	DC dimming (0 ~ 3.3V) for negative dimming
12	EN	BL ON/OFF (ON:DC 3.3V, OFF:0V)
13	SEL	SEL L0: 0V for PWM dimming SEL Hi: 3.3V for DC dimming
14	E_PWM	External PWM Control (H Level: DC 5V, L Level: 0V)

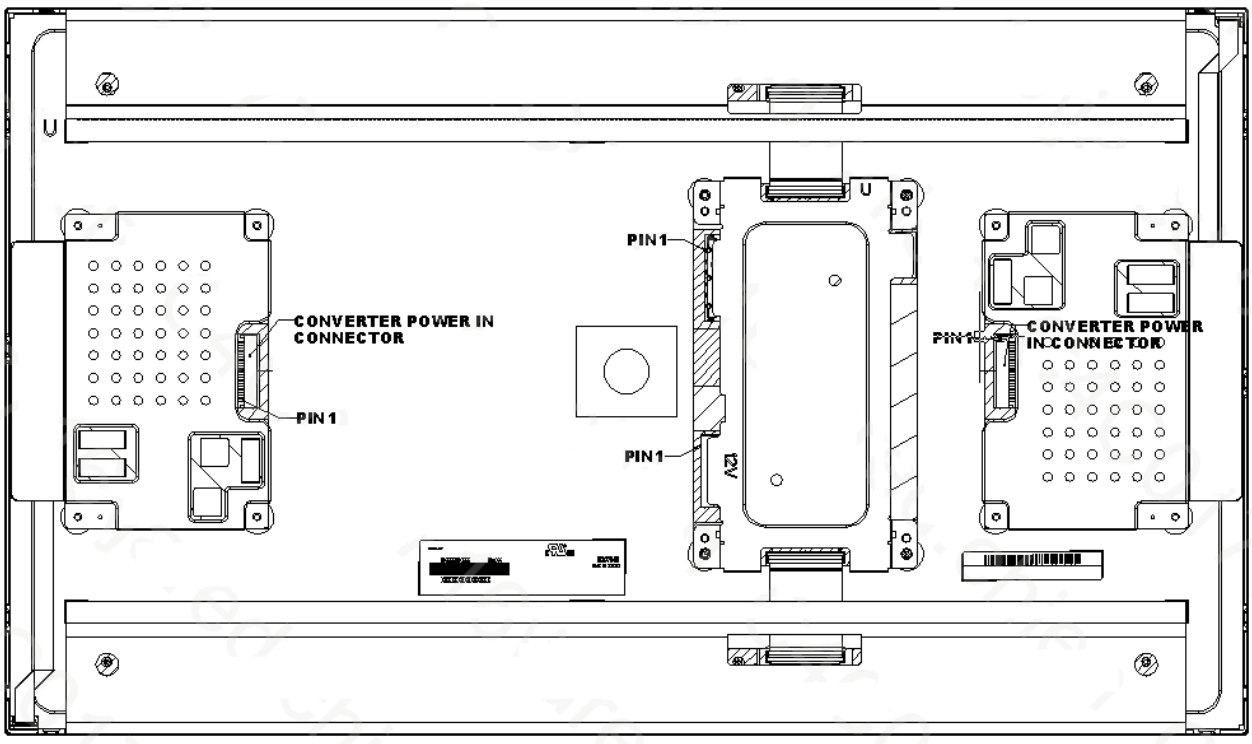

copyright belongs to InnoLux. Any unauthorized use is prohibited.

4.4 LVDS INPUT SIGNAL SPECIFICATIONS

4.4.1 LVDS DATA MAPPING TABLE

LVDS Channel O0	LVDS output	D7	D6	D4	D3	D2	D1	D0
	Data order	OG0	OR5	OR4	OR3	OR2	OR1	OR0
LVDS Channel O1	LVDS output	D18	D15	D14	D13	D12	D9	D8
	Data order	OB1	OB0	OG5	OG4	OG3	OG2	OG1
LVDS Channel O2	LVDS output	D26	D25	D24	D22	D21	D20	D19
	Data order	DE	VS	HS	OB5	OB4	OB3	OB2
LVDS Channel O3	LVDS output	D23	D17	D16	D11	D10	D5	D27
	Data order	NA	OB7	OB6	OG7	OG6	OR7	OR6
LVDS Channel E0	LVDS output	D7	D6	D4	D3	D2	D1	D0
	Data order	EG0	ER5	ER4	ER3	ER2	ER1	ER0
LVDS Channel E1	LVDS output	D18	D15	D14	D13	D12	D9	D8
	Data order	EB1	EB0	EG5	EG4	EG3	EG2	EG1
LVDS Channel E2	LVDS output	D26	D25	D24	D22	D21	D20	D19
	Data order	DE	VS	HS	EB5	EB4	EB3	EB2
LVDS Channel E3	LVDS output	D23	D17	D16	D11	D10	D5	D27
	Data order	NA	EB7	EB6	EG7	EG6	ER7	ER6

copyright belongs to InnoLux. Any unauthorized use is prohibited.

4.4.2 COLOR DATA INPUT ASSIGNMENT

The brightness of each primary color (red, green and blue) is based on the 8-bit gray scale data input for the color. The higher the binary input, the brighter the color. The table below provides the assignment of color versus data input.

Color		Data Signal																							
		Red								Green								Blue							
		R7	R6	R5	R4	R3	R2	R1	R0	G7	G6	G5	G4	G3	G2	G1	G0	B7	B6	B5	B4	B3	B2	B1	B0
Basic Colors	Black	0	0	0	0	0	0	0	0	0	0	0	0	0	0	0	0	0	0	0	0	0	0	0	0
	Red	1	1	1	1	1	1	1	1	0	0	0	0	0	0	0	0	0	0	0	0	0	0	0	0
	Green	0	0	0	0	0	0	0	0	1	1	1	1	1	1	1	1	0	0	0	0	0	0	0	0
	Blue	0	0	0	0	0	0	0	0	0	0	0	0	0	0	0	0	1	1	1	1	1	1	1	1
	Cyan	0	0	0	0	0	0	0	0	1	1	1	1	1	1	1	1	1	1	1	1	1	1	1	1
	Magenta	1	1	1	1	1	1	1	1	0	0	0	0	0	0	0	0	1	1	1	1	1	1	1	1
	Yellow	1	1	1	1	1	1	1	1	1	1	1	1	1	1	1	1	0	0	0	0	0	0	0	0
	White	1	1	1	1	1	1	1	1	1	1	1	1	1	1	1	1	1	1	1	1	1	1	1	1
Gray Scale Of Red	Red(0) / Dark	0	0	0	0	0	0	0	0	0	0	0	0	0	0	0	0	0	0	0	0	0	0	0	0
	Red(1)	0	0	0	0	0	0	0	1	0	0	0	0	0	0	0	0	0	0	0	0	0	0	0	0
	Red(2)	0	0	0	0	0	0	1	0	0	0	0	0	0	0	0	0	0	0	0	0	0	0	0	0
	:	:	:	:	:	:	:	:	:	:	:	:	:	:	:	:	:	:	:	:	:	:	:	:	:
	:	:	:	:	:	:		:		:		:		:	:	:			:		:	:	:	:	
	Red(253)	1	1	1	1	1	1	0	1	0	0	0	:0	0	0	0	0	0	0	0	0	0	0	0	:0
	Red(254)	1	1	1	1	1	1	1	0	0	0	0	0	0	0	0	0	0	0	0	0	0	0	0	0
	Red(255)	1	1	1	1	1	1	1	1	0	0	0	0	0	0	0	0	0	0	0	0	0	0	0	0
Gray Scale Of Green	Green(0) / Dark	0	0	0	0	0	0	0	0	0	0	0	0	0	0	0	0	0	0	0	0	0	0	0	0
	Green(1)	0	0	0	0	0	0	0	0	0	0	0	0	0	0	0	1	0	0	0	0	0	0	0	0
	Green(2)	0	0	0	0	0	0	0	0	0	0	0	0	0	0	1	0	0	0	0	0	0	0	0	0
	:	:	:	:	:	:	:	:	:	:	:	:	:	:	:	:	:	:	:	:	:	:	:	:	:
	:	:	:	:	:	:	:	:	:	:	:	:	:	:	:	:	:	:	:	:	:	:	:	:	:
	Green(253)	0	0	0	0	0	0	0	0	1	1	1	1	1	1	0	1	0	0	0	0	0	0	0	0
	Green(254)	0	0	0	0	0	0	0	0	1	1	1	1	1	1	1	0	0	0	0	0	0	0	0	0
	Green(255)	0	0	0	0	0	0	0	0	1	1	1	1	1	1	1	1	0	0	0	0	0	0	0	0
Gray Scale Of Blue	Blue(0) / Dark	0	0	0	0	0	0	0	0	0	0	0	0	0	0	0	0	0	0	0	0	0	0	0	0
	Blue(1)	0	0	0	0	0	0	0	0	0	0	0	0	0	0	0	0	0	0	0	0	0	0	0	1
	Blue(2)	0	0	0	0	0	0	0	0	0	0	0	0	0	0	0	0	0	0	0	0	0	0	1	0
	:	:	:	:	:	:	:	:	:	:	:	:	:	:	:	:	:	:	:	:	:	:	:	:	:
	:	:	:	:	:	:	:	:	:	:	:	:	:	:	:	:	:	:	:	:	:	:	:	:	:
	Blue(253)	0	0	0	0	0	0	0	0	0	0	0	0	0	0	0	0	1	1	1	1	1	1	0	1
	Blue(254)	0	0	0	0	0	0	0	0	0	0	0	0	0	0	0	0	1	1	1	1	1	1	1	0
	Blue(255)	0	0	0	0	0	0	0	0	0	0	0	0	0	0	0	0	1	1	1	1	1	1	1	1

Note (1) 0: Low Level Voltage, 1: High Level Voltage

copyright belongs to InnoLux. Any unauthorized use is prohibited.

4.5 DISPLAY TIMING SPECIFICATIONS

The input signal timing specifications are shown as the following table and timing diagram.

Signal	Item	Symbol	Min.	Typ.	Max.	Unit	Note
LVDS Clock	Frequency	Fc	70	74.25	82	MHz	-
	Period	Tc	-	13.47	-	ns	
	Input cycle to cycle jitter	T_{rcl}	-	0.01*Tc	0.015*Tc	ns	(1)
	Input Clock to data skew	TLVCCS	-0.02*Tc	-	0.02*Tc	ps	(2)
	Spread spectrum modulation range	F_{clkin_mod}	0.987*Fc	-	1.013*Fc	MHz	(3)
	Spread spectrum modulation frequency	F_{SSM}	-	-	70	KHz	
Vertical Display Term	Frame Rate	Fr	-	60	-	Hz	Tv=Tvd+Tvb
	Total	Tv	1105	1125	1150	Th	-
	Active Display	Tvd	1080	1080	1080	Th	-
	Blank	Tvb	25	45	70	Th	-
Horizontal Display Term	Total	Th	1015	1100	1150	Tc	Th=Thd+Thb
	Active Display	Thd	960	960	960	Tc	-
	Blank	Thb	55	140	190	Tc	-

Note: Because this module is operated by Sync mode, DE,Hsync and Vsync input signals of odd and even path must be synchronized.

INPUT SIGNAL TIMING DIAGRAM

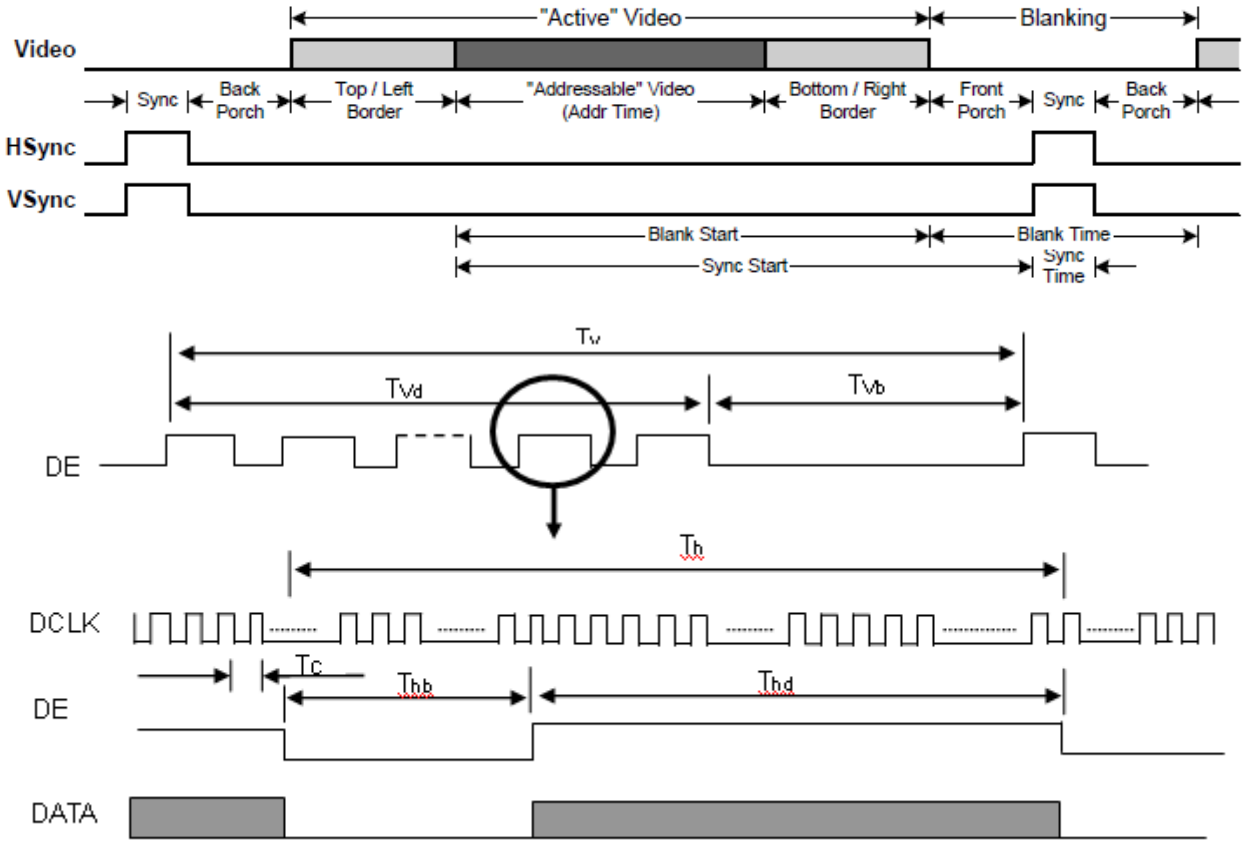

copyright belongs to InnoLux. Any unauthorized use is prohibited.

Note (1) The input clock cycle-to-cycle jitter is defined as below figures. Trcl = I T_1 – TI

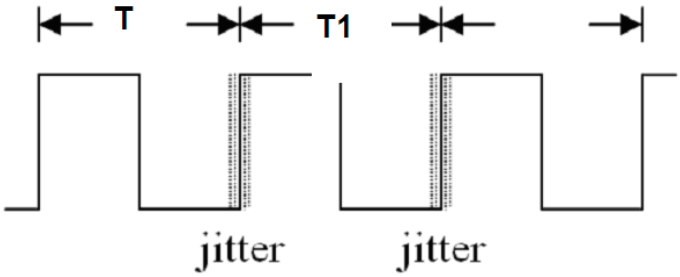

t

Note (2) Input Clock to data skew is defined as below figures.

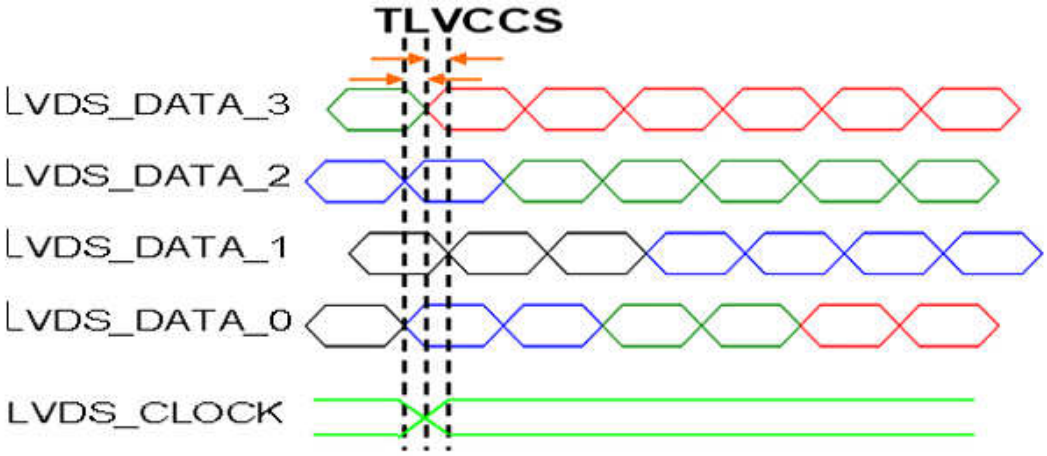

Note (3) The SSCG (Spread spectrum clock generator) is defined as below figures.

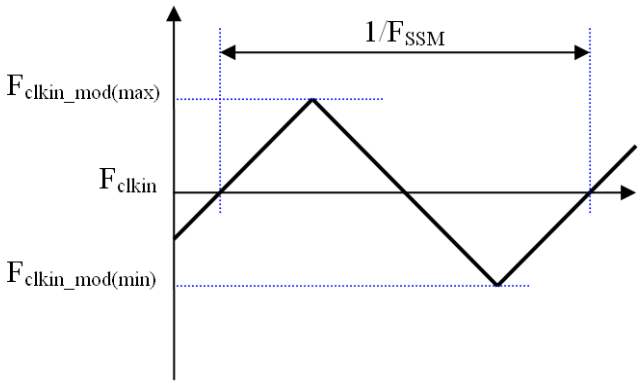

Note(4) Because this module is operated by Sync mode, DE,Hsync and Vsync input signals of odd and even path must be synchronized.

Fc = Fr X Tv X Th

Please make sure the range of pixel clock has follow the below equation and Fc, Fr, Tv , Th not allowed to get beyond the min or max spec.

copyright belongs to InnoLux. Any unauthorized use is prohibited.

4.6 POWER ON/OFF SEQUENCE

To prevent a latch-up or DC operation of LCD assembly, the power on/off sequence should be as the diagram below.

Power ON/OFF sequence

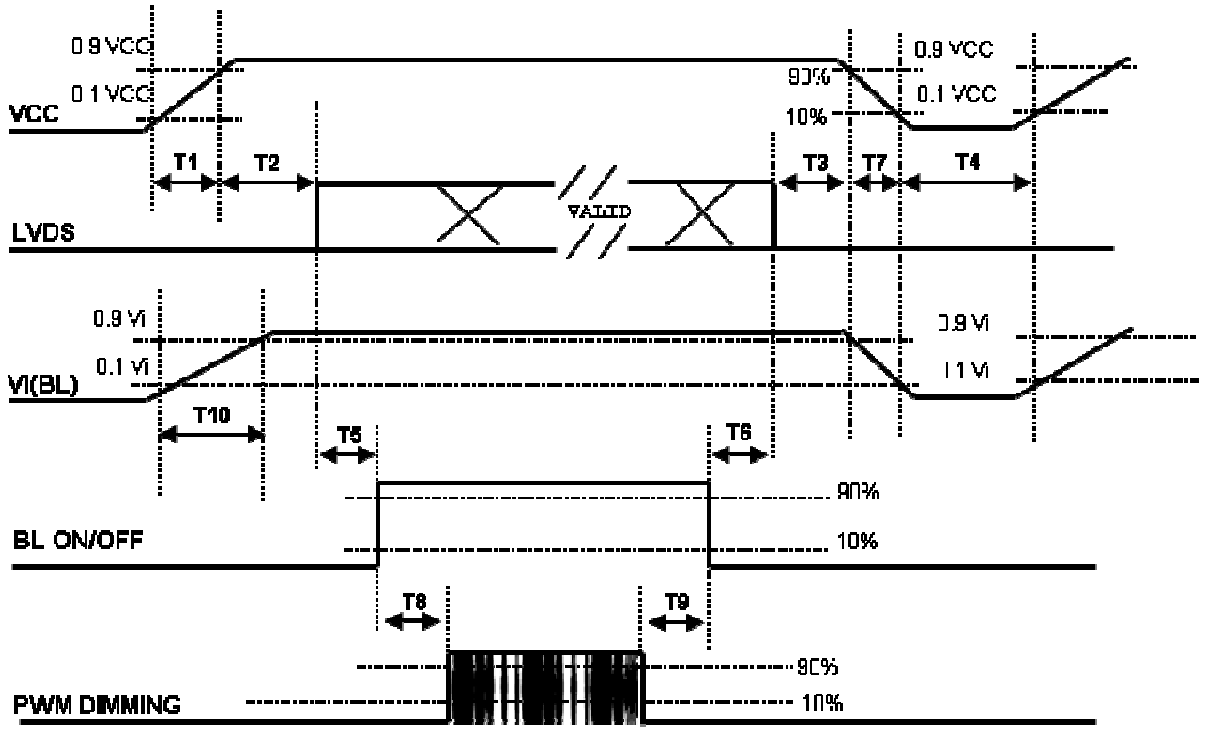

Note:

(1) The supply voltage of the external system for the module input should be the same as the definition of Vcc.

(2) When the backlight turns on before the LCD operation of the LCD turns off, the display may momentarily become abnormal screen.

(3) In case of VCC = off level, please keep the level of input signals on the low or keep a high impedance.

(4) T4 should be measured after the module has been fully discharged between power off and on period.

(5) Interface signal shall not be kept at high impedance when the power is on.

(6) INX won't take any responsibility for the products which are damaged by the customers not following the Power Sequence.

(7) There might be slight electronic noise when LCD is turned off (even backlight unit is also off). To avoid this symptom, we suggest "Vcc falling timing" to follow " T7 spec".

Parameter	Value			Units
	Min	Typ	Max	
T1	0.5	-	10	ms
T2	0	-	50	ms
T3	0	-	50	ms
T4	500	-	-	ms
T5	450	-	-	ms

copyright belongs to InnoLux. Any unauthorized use is prohibited.

Parameter	Value			Units
	Min	Typ	Max	
T6	200	-	-	ms
T7	10	-	100	ms
T8	10	-	-	ms
T9	10	-	-	ms
T10	20	-	50	ms

5. OPTICAL CHARACTERISTICS

5.1 TEST CONDITIONS

Item	Symbol	Value	Unit
Ambient Temperature	Ta	25±2	°C
Ambient Humidity	Ha	50±10	%RH
Supply Voltage	According to typical value in "4.3. ELECTRICAL CHARACTERISTICS"		
Input Signal			
PWM Duty Ratio	D	100	%

5.2 OPTICAL SPECIFICATIONS

The relative measurement methods of optical characteristics are shown here and all items are measured at the center point of screen unless otherwise noted. The following items should be measured under the test conditions described above and stable conditions shown in Note (5).

Definition :

Grayscale Maximum : Grayscale 255

White : Luminance of Grayscale 255 (All R,G,B)

Black : Luminance of grayscale 0 (All R,G,B)

.Item		Symbol	Condition	Min.	Typ.	Max.	Unit	Note
Color Chromaticity (CIE 1931)	Red	Rx	θ_x=0°, θ_Y =0° Grayscale Maximum	Typ –0.03	0.676	Typ +0.03	-	(1),(4),(5)
		Ry			0.313			
	Green	Gx			0.278			
		Gy			0.658			
	Blue	Bx			0.153			
		By			0.074			
	White	Wx			0.306			
		Wy			0.339			
Center Luminance of White (Center of Screen)		L_C		280	350	-	cd/m^2	
Contrast Ratio		CR		100,000	200,000	-	-	(2), (5)
Response Time (by Landscape Mode)		T_R	θ_x=0°, θ_Y =0°	-	8	13	ms	(3)
		T_F			4	9		
White Variation		δW	θ_x=0°, θ_Y =0°	70			%	(5), (6)
Color uniformity		Δx	θ_x=0°, θ_Y =0°	--	--	0.020		(5), (6)
		Δy		--	--	0.020		
Viewing Angle	Horizontal	θx- + θx+	CR ≧ (100)	160	178	-	Deg.	(1), (5)
	Vertical	θy- + θy+		160	178	-		

copyright belongs to InnoLux. Any unauthorized use is prohibited.

Note (1) Definition of Viewing Angle (θx, θy):

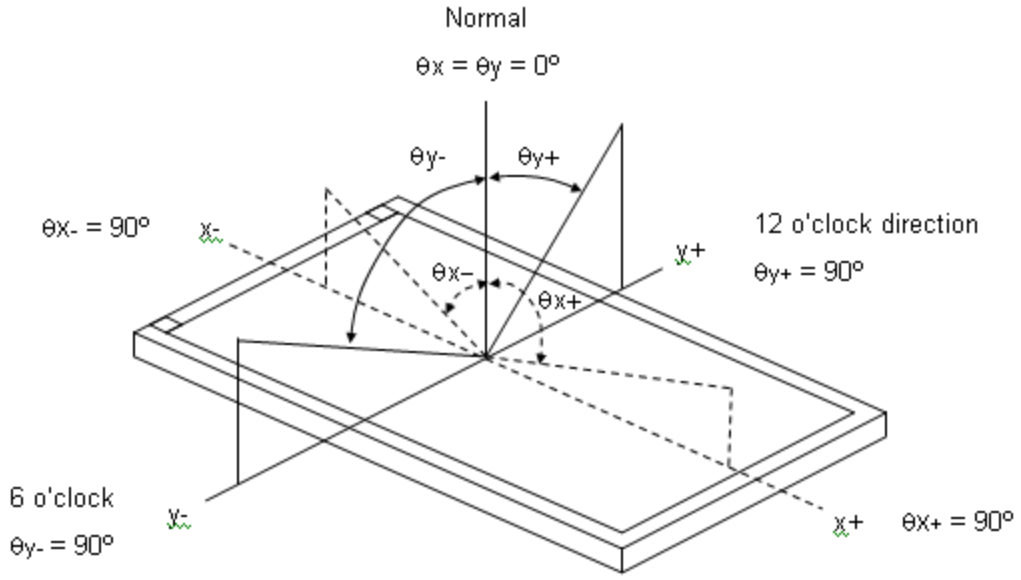

Note (2) Definition of Contrast Ratio (CR):

The contrast ratio can be calculated by the following expression at center point.

Contrast Ratio (CR) = White / Black

.

Note (3) Definition of Response Time (T_R, T_F): :

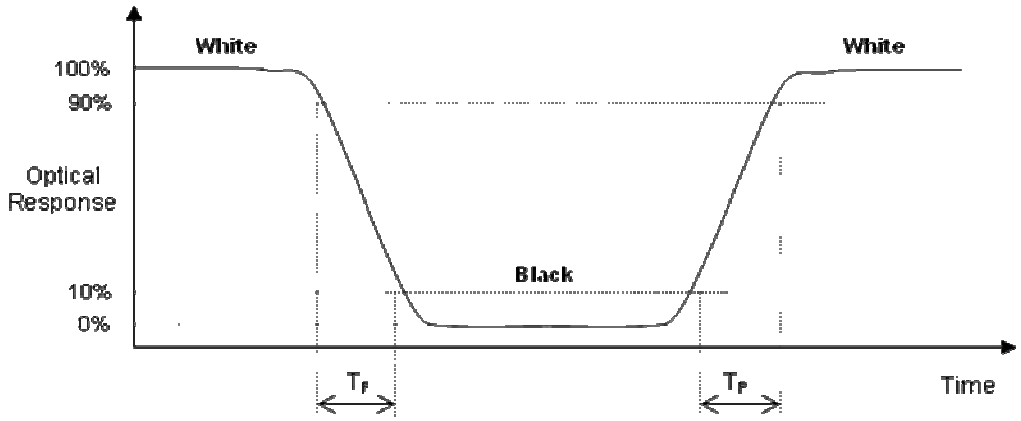

Note (4) Definition of Luminance of White (L_C):

Measure the luminance of White at center point

copyright belongs to InnoLux. Any unauthorized use is prohibited.

Note (5) Measurement Setup:

The LCD module should be stabilized at given temperature for 60 minutes to avoid abrupt temperature change during measuring. In order to stabilize the luminance, the measurement should be executed after lighting Backlight for 60 minutes in a windless room. The measurement placement of module should be in accordance with module drawing.

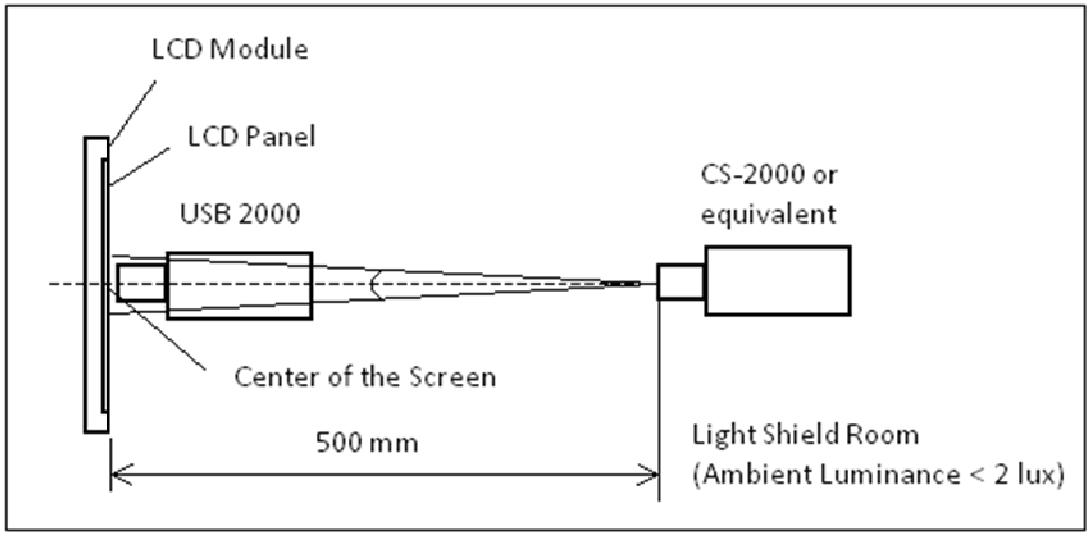

Note (6) Definition of White Variation (δW) and Color uniformity (Δx, Δy):

Measure the luminance of gray level 255 at 9 points

δW = Minimum [L (1) ~ L (9)] / Maximum [L (1) ~ L (9)]

Δx= Maximum [Cx (1) ~ Cx (9)] - Minimum [Cx (1) ~ Cx (9)]

Δy= Maximum [Cy (1) ~ Cy (9)] - Minimum [Cy (1) ~ Cy(9)]

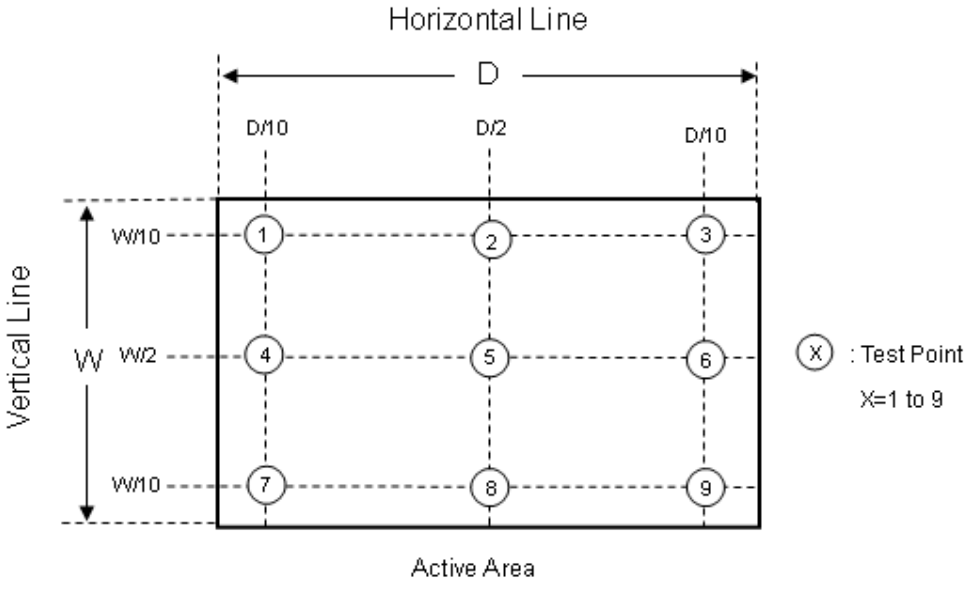

copyright belongs to InnoLux. Any unauthorized use is prohibited.

6. RELIABILITY TEST ITEM

Items	Required Condition	Note
Temperature Humidity Bias (THB)	Ta= 40℃ , 80%RH, 240hours	
High Temperature Operation (HTO)	Ta=40℃ , 240hours	
Low Temperature Operation (LTO)	Ta= 0℃ , 240hours	
High Temperature Storage (HTS)	Ta= 60℃ , 240hours	
Low Temperature Storage (LTS)	Ta= -20℃ , 240hours	
Vibration Test (Non-operation)	Acceleration: 1.5 G Wave: sine Frequency: 10 - 300 Hz Sweep: 30 Minutes each Axis (X, Y, Z)	
Shock Test (Non-operation)	Acceleration: 50 G Wave: Half-sine Active Time: 11 ms Direction : ± X, ± Y, ± Z.(one time for each Axis)	
Thermal Shock Test (TST)	-20℃/30min , 60℃ / 30min , 100 cycles	
On/Off Test	25℃ ,On/10sec , Off /10sec , 30,000 cycles	
ESD (Electro Static Discharge)	Contact Discharge: ± 8KV, 150pF(330Ω)	
	Air Discharge: ± 15KV, 150pF(330Ω)	
Altitude Test	Operation:10,000 ft / 24hours Non-Operation:30,000 ft / 24hours	

Note (1) Criteria : Normal display image with no obvious non-uniformity and no line defect.

Note (2) Evaluation should be tested after storage at room temperature for more than two hour

Note (3) At testing Vibration and Shock, the fixture in holding the module has to be hard and rigid enough so that the module would not be twisted or bent by the fixture.

The fixing condition is shown as below:

At Room Temperature

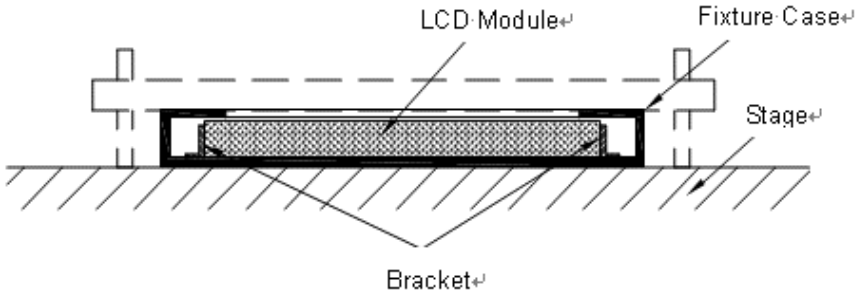

copyright belongs to InnoLux. Any unauthorized use is prohibited.

7. PACKAGING

7.1 PACKING SPECIFICATIONS

(1)7 LCD modules / 1 Box

(2)Box Dimension : 620(L) x 384(W) x 390(H) mm

(3)Weight approximately : 23.24 kg

7.2 PACKAGING METHOD

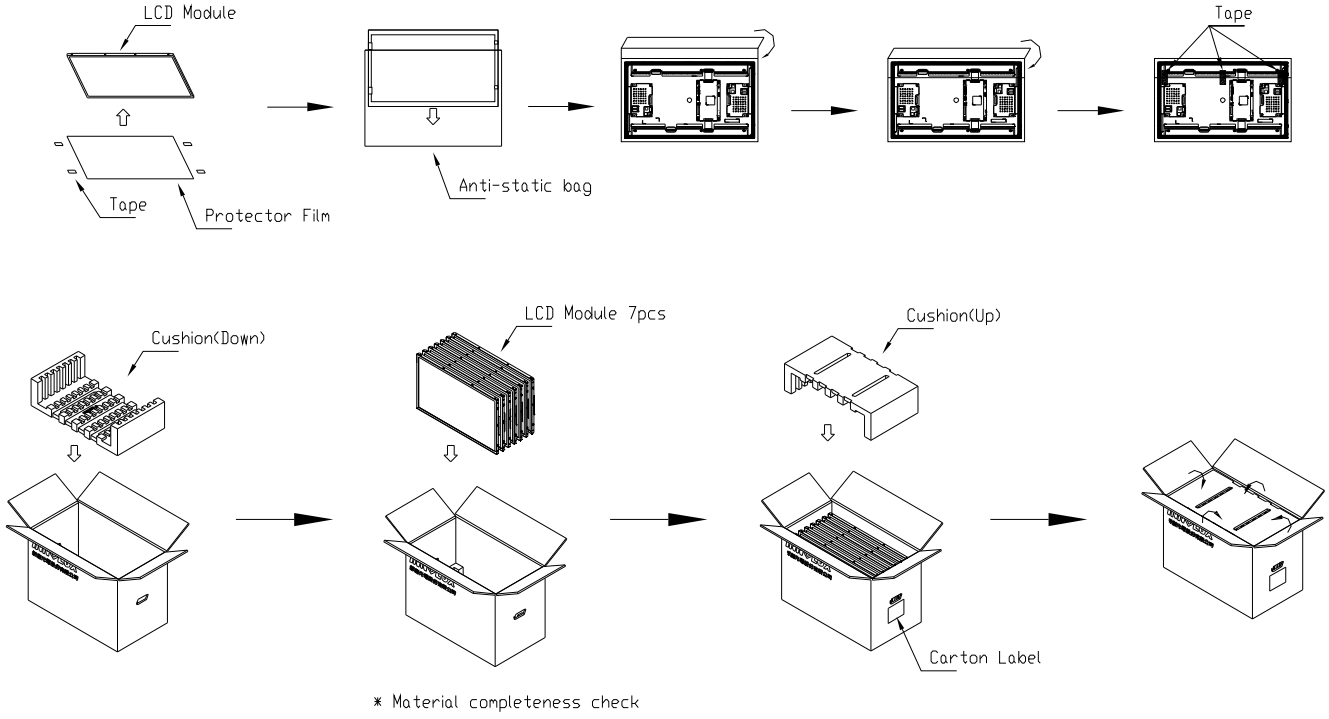

Figure 10-1 packing method

copyright belongs to InnoLux. Any unauthorized use is prohibited.

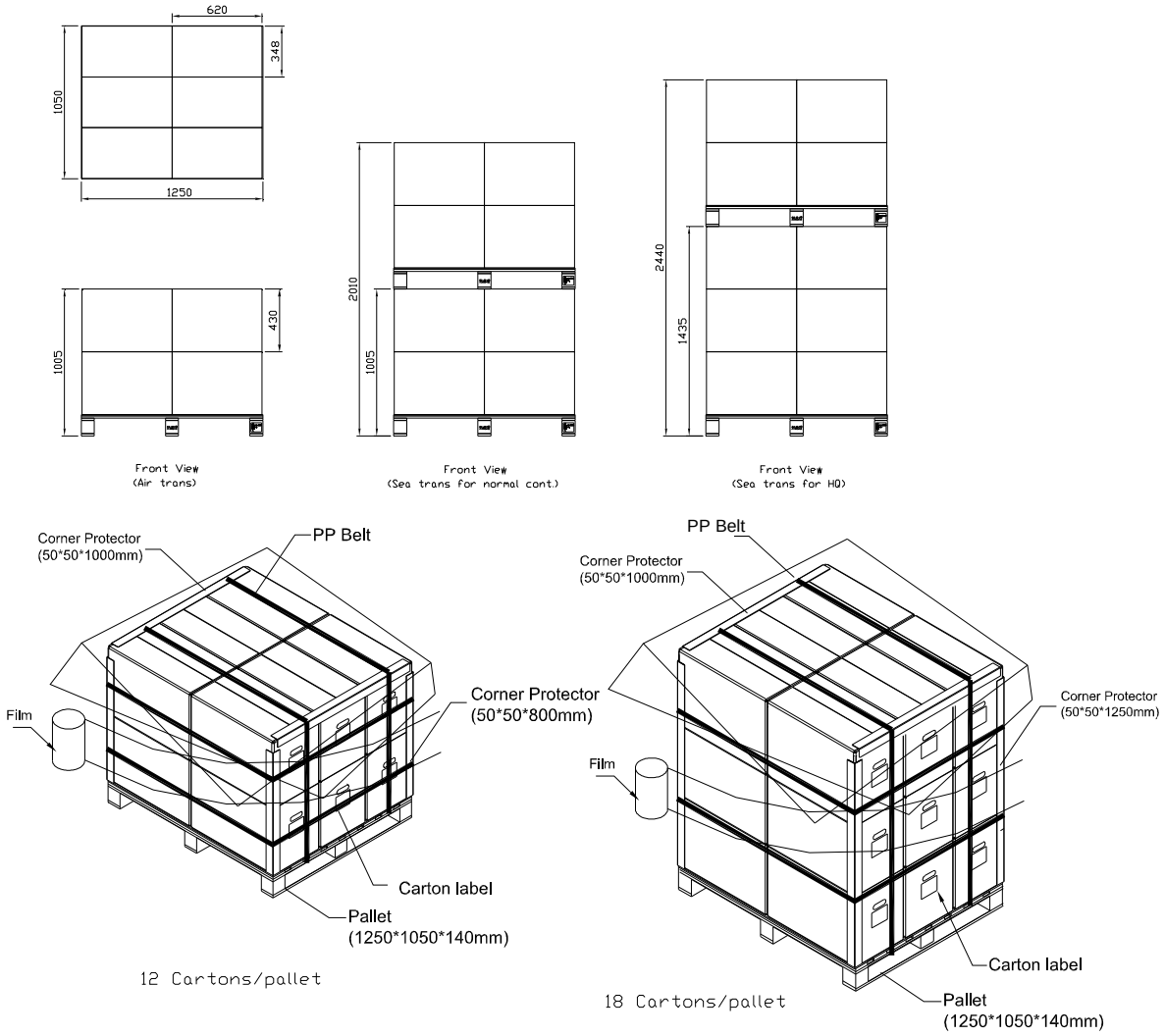

Figure 10-2 packing method

7.3 UN-PACKAGING METHOD

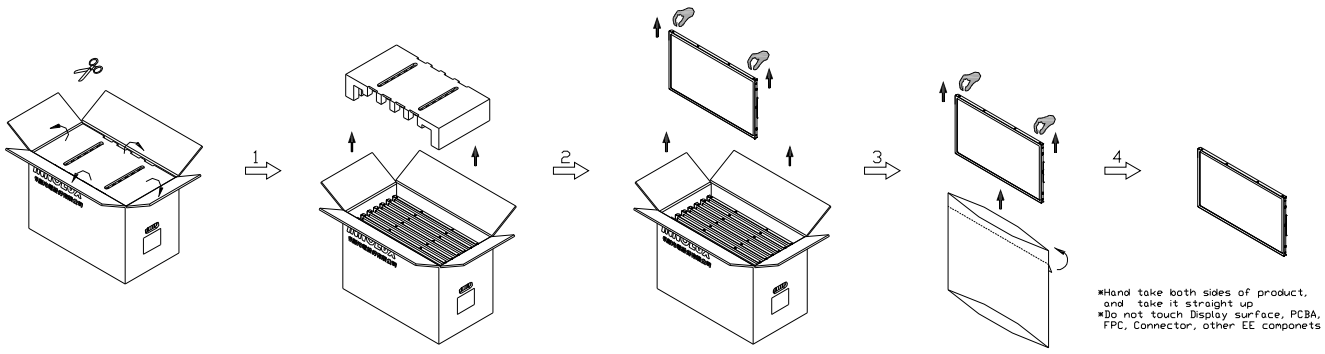

copyright belongs to InnoLux. Any unauthorized use is prohibited.

8. INNOLUX MODULE LABEL

The barcode nameplate is pasted on each module as illustration, and its definitions are as following explanation.

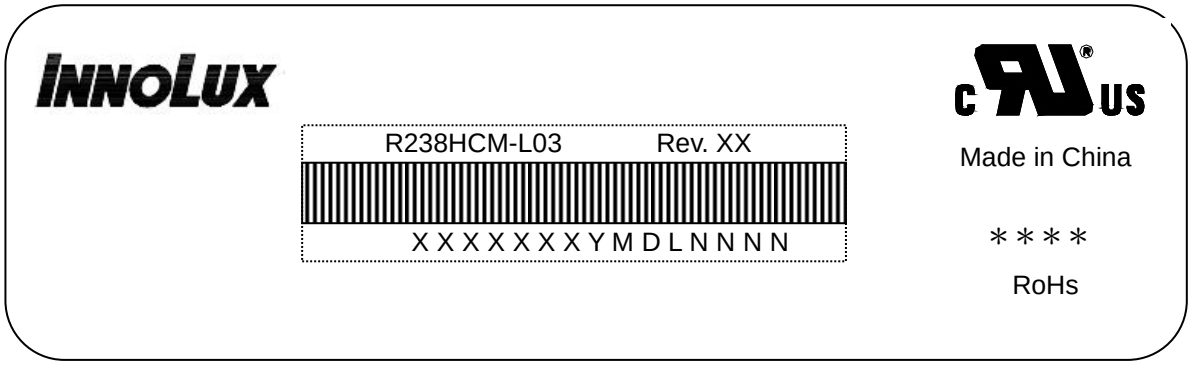

(a) Model Name: R238HCM-L03

(b) Revision: Rev. XX, for example: A0, A1… B1, B2… or C1, C2…etc.

(c) Innolux barcode definition:

Serial ID: XX-XX-X-XX-YMD-L-NNNN

Code	Meaning	Description
XX	Innolux internal use	-
XX	Revision	Cover all the change
X	Innolux internal use	-
XX	Innolux internal use	-
YMD	Year, month, day	Year: 0~9, 2020=0, 2021=1, 2022=2, 2023=3,… Month: 1~12=1, 2, 3, ~, 9, A, B, C Day: 1~31=1, 2, 3, ~, 9, A, B, C, ~, W, X, Y, exclude I, O, and U.
L	Product line #	Line 1=1, Line 2=2, Line 3=3, …
NNNN	Serial number	Manufacturing sequence of product

9. PRECAUTIONS

9.1 ASSEMBLY AND HANDLING PRECAUTIONS

(1) Do not apply rough force such as bending or twisting to the module during assembly.

(2) To assemble or install module into user's system can be only in clean working areas. The dust and oil may cause electrical short or worsen the polarizer.

(3) It's not permitted to have pressure or impulse on the module because the LCD panel and Backlight will be damaged.

(4) Always follow the correct power sequence when LCD module is connecting and operating. This can prevent damage to the CMOS LSI chips during latch-up.

(5) Do not pull the I/F connector in or out while the module is operating.

(6) Do not disassemble the module.

copyright belongs to InnoLux. Any unauthorized use is prohibited.

(7) Use a soft dry cloth without chemicals for cleaning, because the surface of polarizer is very soft and easily scratched.

(8) It is dangerous that moisture come into or contacted the LCD module, because moisture may damage LCD module when it is operating.

(9) High temperature or humidity may reduce the performance of module. Please store LCD module within the specified storage conditions.

(10)When ambient temperature is lower than 10ºC may reduce the display quality. For example, the response time will become slowly.

9.2 STORAGE PRECAUTIONS

(1) Do not leave the module in high temperature, and high humidity for a long time. It is highly recommended to store the module with temperature from 0℃ to 35℃ and relative humidity of less than 70%

(2) Do not store the TFT – LCD module in direct sunlight

(3) The module should be stored in dark place. It is prohibited to apply sunlight or fluorescent light in storing

9.3 OPERATION PRECAUTIONS

(1) The LCD product should be operated under normal condition.

Normal condition is defined as below :

Temperature : 0~40℃

Relative humidity: 80% max

Display pattern : continually changing pattern(Not stationary)

(2) If the product will be used in extreme conditions such as high temperature,high humidity,high altitude ,display pattern or operation time etc…It is strongly recommended to contact Innolux for application engineering advice . Otherwise , Its reliability and function may not be guaranteed.

(3) This module consists of a TFT cell and electronic circuits with CMOS-ICs, which are very susceptible to electrostatic discharge. Persons who are handling the module should be grounded through adequate methods such as a wrist band. I/F connector pins should not be touched directly with bare hands. Please make sure of electrostatic protection during assembly and operation.

9.4 SAFETY PRECAUTIONS

(1) If the liquid crystal material leaks from the panel, it should be kept away from the eyes or mouth. In case of contact with hands, skin or clothes, it has to be washed away thoroughly with soap.

(2) After the module's end of life, it is not harmful in case of normal operation and storage.

9.5 SAFETY STANDARDS

The LCD module should be certified with safety regulations as follows:

(1) UL60950-1 or updated standard.

(2) IEC60950-1 or updated standard.

9.6 OTHER

When fixed patterns are displayed for a long time, remnant image is likely to occur.

copyright belongs to InnoLux. Any unauthorized use is prohibited.

APPENDIX. OUTLINE DRAWING

copyright belongs to InnoLux. Any unauthorized use is prohibited.

REV	EC NUMBER	DESCRIPTION	DATE
A		First Release	2019/11/29
B	ER1183880	modify sheet2(M8)	2020/03/11

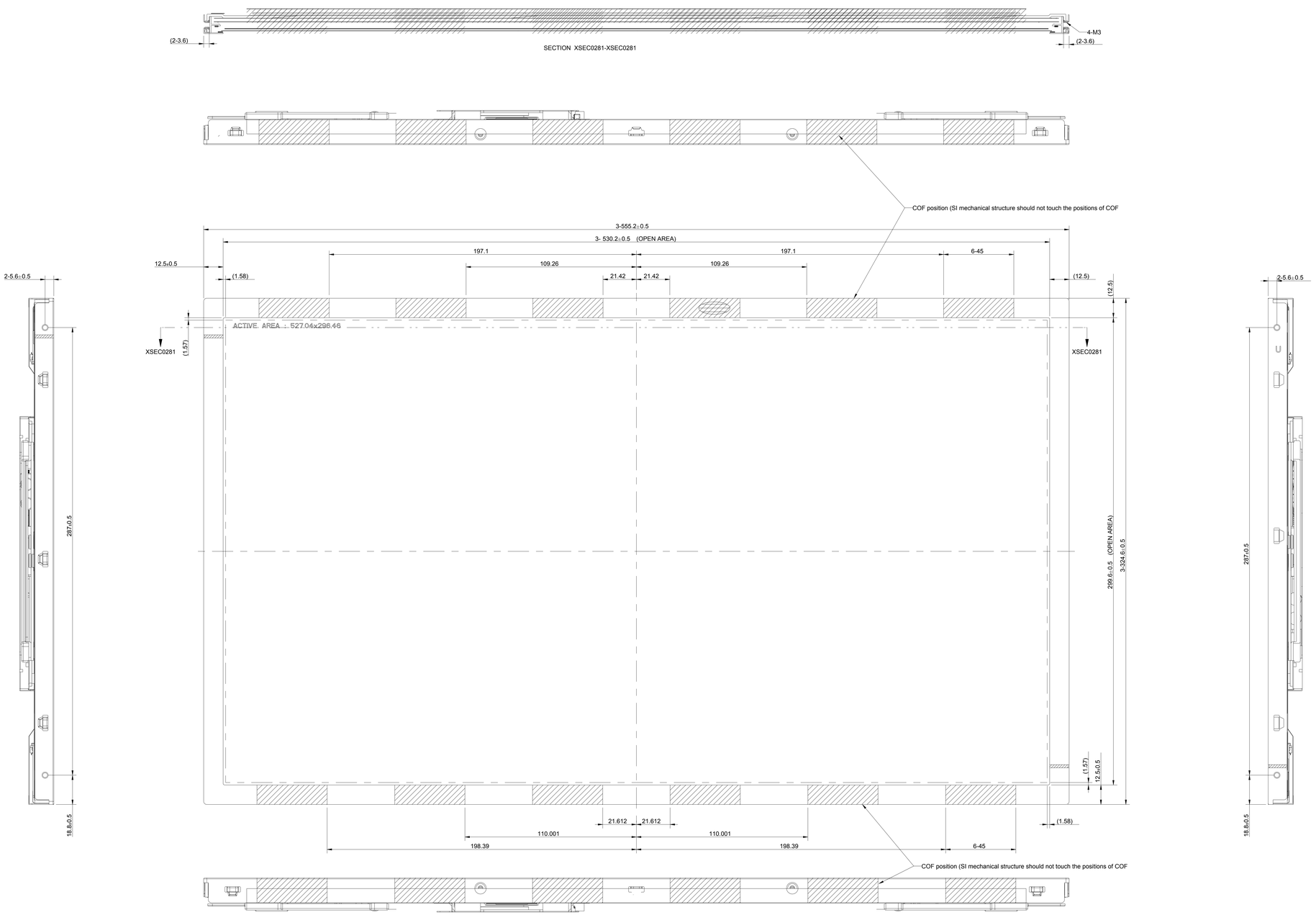



BM WIDTH VARIATION : |A-B|,|C-D|,=1.4 (MAX.)
FIG.1

NOTES:
1.UNSPECIFIED TOLERANCE:±0.5 (ex.±0.5mm.)
2.MODULE BACKSIDE CAN'T WITHSTAND ANYTHING EXCEPT USER HOLE.
2.DISPLAY AREA POSITION TOLERANCE: |A-B|<=1.4mm & |C-D|<=1.4mm(SEE FIG.1).
3.USER HOLE
STANDOFF TYPE :
STANDOFF: M3, PITCH=0.5/MACHINE
4.CONNECTOR TYPE:
CN1:POWER CONNECTOR
CviLux:CI0114M1HR0-LA-NH
FCN:JH2-D4-143N

CN2:INTERFACE CONNECTOR
FCN:WF23-402-5133
P-TWO:187059-51221

PPN DIMENSION	CONTROL DIMENSION	DATE 2020/03/11	SCALE 1:1	UNIT mm	
APPROVED	SY.F	PART NUMBER or PRN NUMBER DN1156534			REVISION B
CHECKED	wish_huang	PART DESCRIPTION module_R238HCM-L01			SHEET NUMBER 1/2
DESIGNED	jared.chien	INNOLUX			SIZE A0

REV	EC NUMBER	DESCRIPTION	DATE
A		First Release	2019/11/29
B	ER1183880	modify sheet2(M8)	2020/03/11

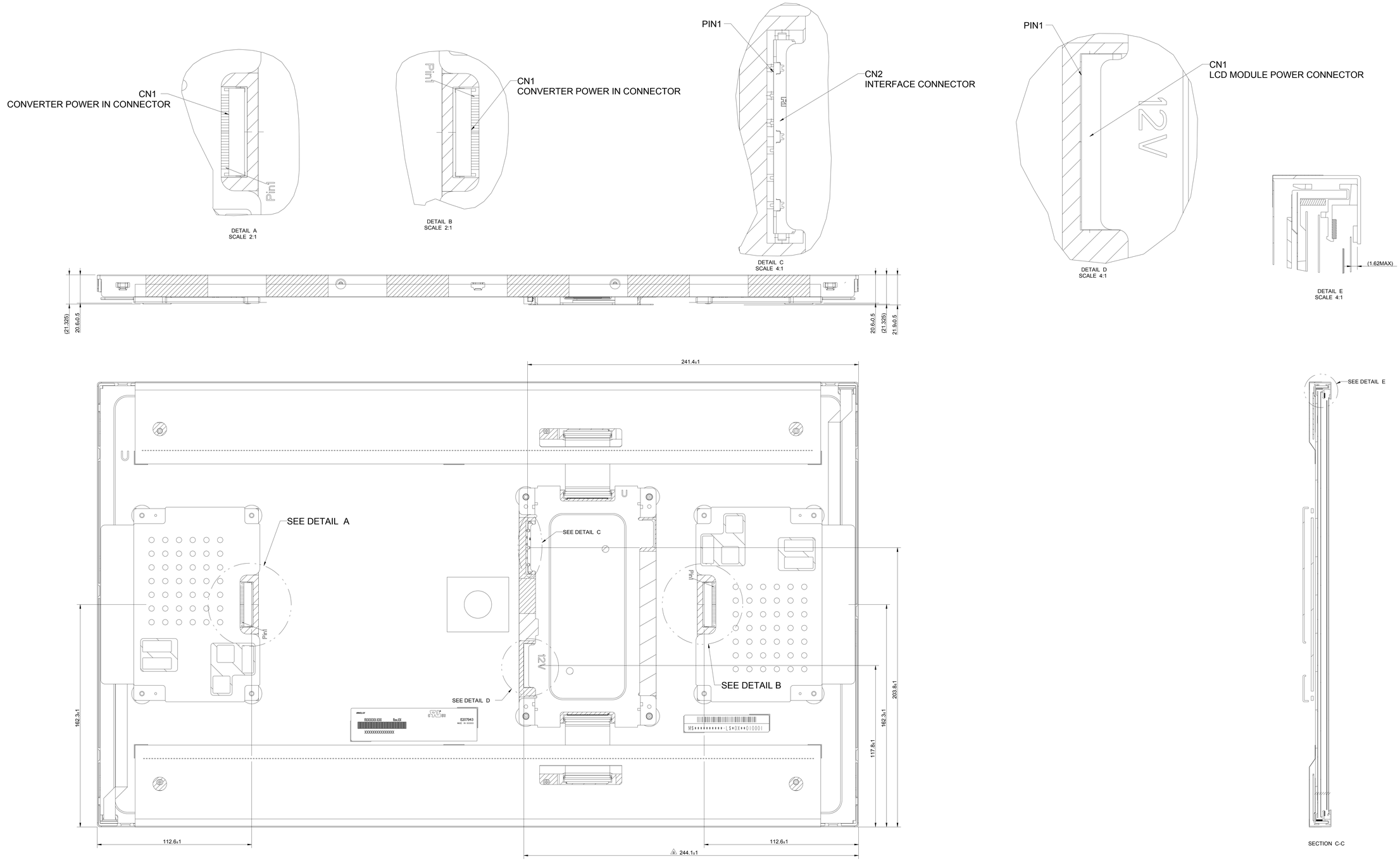

NOTES:
1.UNSPECIFIED TOLERANCE:±0.5 (ex.±0.5mm.)
2.MODULE BACKSIDE CAN'T WITHSTAND ANYTHING EXCEPT USER HOLE.
2.DISPLAY AREA POSITION TOLERANCE: |A-B|<=1.4mm & |C-D|<=1.4mm(SEE FIG.1).
3.USER HOLE
STANDOFF TYPE :
STANDOFF: M3, PITCH=0.5/MACHINE
4.CONNECTOR TYPE:
CN1:POWER CONNECTOR
CviLux:CI0114M1HR0-LA-NH
FCN:JH2-D4-143N

CN2:INTERFACE CONNECTOR
FCN:WF23-402-5133
P-TWO:187059-51221

PPN DIMENSION	CONTROL DIMENSION	DATE 2020/03/11	SCALE 1:1	UNIT mm	
APPROVED	SY.F	PART NUMBER or ITEM NUMBER DN1156534			DRAWING NO. B
CHECKED	WISH.HUANG	PART DESCRIPTION module_R238HCM-L01			SHEET NUMBER 2/2
DESIGNED	JARED.CHIEN	INNOLUX			SIZE A0