☐ **Preliminary Specification**
■ **Final Specification**

Module	24 Inch Color TFT-LCD
Model Name	G240UAN01.1 3TFTLCD24M0(T0130)

Customer	**Date**	**Approved by**	**Date**
	開發部 2023.08.01 發行	Buffy Chen	Nov 18, 2022
Checked & Approved by	**Date**	**Prepared by**	**Date**
		Isaac TY Huang	Nov 18, 2022
Customer's sign back page		General Display Business Unit / AUO Display Plus Corporation	

© AUO Display Plus Corporation Proprietary

Contents

1. Operating Precautions 4
2. General Description 5
2.1 Display Characteristics 5
2.2 Optical Characteristics 6
3. Functional Block Diagram 9
4. Absolute Maximum Ratings 10
4.1 Absolute Ratings of TFT LCD Module 10
4.2 Absolute Ratings of Environment 10
5. Electrical Characteristics 11
5.1 TFT LCD Module 11
5.2 Backlight Unit 13
6. Signal Characteristic 15
6.1 Pixel Format Image 15
6.2 Scanning Direction 15
6.3 Signal Description 16
6.4 The Input Data Format 18
6.5 Interface Timing 19
6.6 Power ON/OFF Sequence 21
7. Reliability Test Criteria 22
8. Mechanical Characteristics 23
8.1 LCM Outline Dimension 23
9. Label and Packaging 25
9.1 Shipping Label (on the rear side of TFT-LCD display) 25
9.2 Carton Package 25
10 Safety 26
10.1 Sharp Edge Requirements 26
10.2 Materials 26
10.3 Capacitors 26
10.4 National Test Lab Requirement 26

© AUO Display Plus Corporation Proprietary

Record of Revision

Version	Date (yyyy/m/d)	Page	Old description	New Description
1.0	Feb 08, 2017	All	First edition specification	
1.1	Apr 05, 2017	P13 P14	backlight connector type backlight input signal_VDD max. & min.	
2.0	Sep 27, 2018	P6	White Luminance: 750nit(Typ), 600nit(min.)	White Luminance 850nit(Typ), 680nit(min.)
3.0	2019/06/04	P16	6.3 Signal Description Delete the description about the transmitter" SN75LVDS83" Couldn't use for our Panel	Delete suggested item, about the description receiver.
4.0	2022/11/18	P9	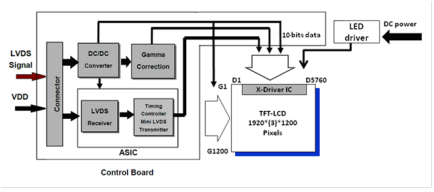	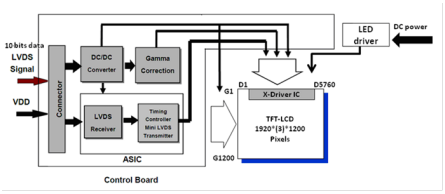
		P14	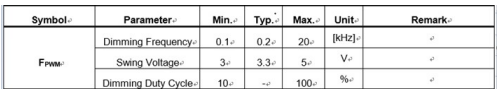	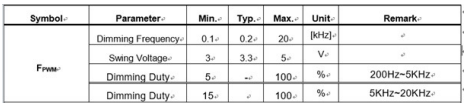
		P25		

© AUO Display Plus Corporation Proprietary

1. Operating Precautions

1) Since front polarizer is easily damaged, please be cautious and not to scratch it.
2) Be sure to turn off power supply when inserting or disconnecting from input connector.
3) Wipe off water drop immediately. Long contact with water may cause discoloration or spots.
4) When the panel surface is soiled, wipe it with absorbent cotton or soft cloth.
5) Since the panel is made of glass, it may be broken or cracked if dropped or bumped on hard surface.
6) To avoid ESD (Electro Static Discharde) damage, be sure to ground yourself before handling TFT-LCD Module.
7) Do not open nor modify the module assembly.
8) Do not press the reflector sheet at the back of the module to any direction.
9) In case if a module has to be put back into the packing container slot after it was taken out from the container, do not press the center of the LED light bar edge. Instead, press at the far ends of the LED light bar edge softly. Otherwise the TFT Module may be damaged.
10) At the insertion or removal of the Signal Interface Connector, be sure not to rotate nor tilt the Interface Connector of the TFT Module.
11) TFT-LCD Module is not allowed to be twisted & bent even force is added on module in a very short time. Please design your display product well to avoid external force applying to module by end-user directly.
12) Small amount of materials having no flammability grade is used in the LCD module. The LCD module should be supplied by power complied with requirements of Limited Power Source (IEC60950 or UL1950), or be applied exemption.
13) Severe temperature condition may result in different luminance, response time and lamp ignition voltage.
14) Continuous operating TFT-LCD display under low temperature environment may accelerate lamp exhaustion and reduce luminance dramatically.
15) The data on this specification sheet is applicable when LCD module is placed in landscape position.
16) Continuous displaying fixed pattern may induce image sticking. It's recommended to use screen saver or shuffle content periodically if fixed pattern is displayed on the screen.

© AUO Display Plus Corporation Proprietary

2. General Description

G240UAN01.1 is a Color Active Matrix Liquid Crystal Display composed of a TFT-LCD panel, a driver circuit, and a backlight system. The screen format is intended to support the WUXGA (1920(H) x 1200(V)) screen and 1.07B colors. All input signals are 2-channel LVDS interface compatible.

2.1 Display Characteristics

The following items are characteristics summary on the table under 25 ºC condition:

Items	Unit	Specifications
Screen Diagonal	[inch]	24.07 (611.32mm)
Active Area	[mm]	518.4 (H) x 324.0 (V)
Resolution		1920(x3) x 1200
Pixel Pitch	[mm]	0.270 (per one triad) x 0.270
Pixel Arrangement		R.G.B. Vertical Stripe
Display Mode		AHVA mode, Normally Black
Nominal Input Voltage VDD	[Volt]	+12
Power Consumption	[Watt]	45.8 (typ) (BLU 41W + LCD 4.8W)
Weight	[Grams]	2500 (Typ)
Physical Size	[mm]	546.4 (H) x 352.0 (V) x 18.1 (D) (Typ)
Electrical Interface		Dual channel LVDS
Surface Treatment		Anti-Glare treatment
Support Color		1.07B colors(8bit+HiFRC)
Temperature Range Operating Storage (Non-Operating)	 [ºC] [ºC]	 0 to +50 -20 to +60
RoHS Compliance		RoHS Compliance

© AUO Display Plus Corporation Proprietary

2.2 Optical Characteristics

The optical characteristics are measured under stable conditions at 25 °C (Room Temperature):

Item	Unit	Conditions		Min.	Typ.	Max.	Note
White Luminance	cd/m²	ILED=65mA(center point)		680	850	-	1
Uniformity	%	9 points		80	85	-	2,3
Contrast Ratio	--			700	1000	-	4
Response Time	msec	Rising		-	-	-	5
		Falling		-	-	-	
		Rising + Falling		-	14	25	
Viewing Angle	degree	Horizontal CR >= 10	(Right)	75	89	-	6
			(Left)	75	89	-	
		Vertical CR >= 10	(Upper)	70	89	-	
			(Lower)	70	89	-	
Color / Chromaticity Coordinates (CIE 1931)	--	Red x		0.642	0.672	0.702	
		Red y		0.287	0.317	0.347	
		Green x		0.260	0.290	0.320	
		Green y		0.635	0.665	0.695	
		Blue x		0.125	0.155	0.185	
		Blue y		0.015	0.045	0.075	
		White x		0.283	0.313	0.343	
		White y		0.299	0.329	0.359	
Color Gamut	%				88		

Note 1: Measurement method

Equipment Pattern Generator, Power Supply, Digital Voltmeter, Luminance meter (SR_3 or equivalent)

Aperture 1° with 50cm viewing distance

Test Point Center

Environment *< 1 lux*

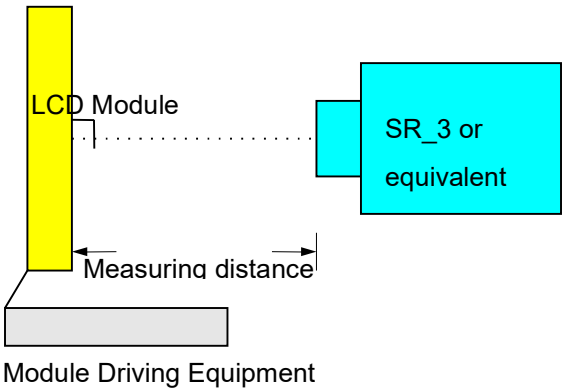

© AUO Display Plus Corporation Proprietary

Note 2: Definition of 9 points position

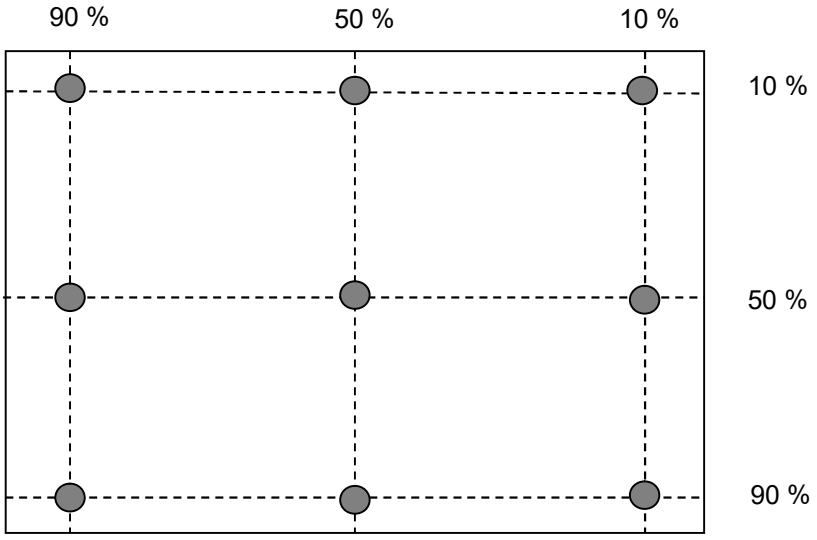

Note 3: The luminance uniformity of 9 points is defined by dividing the minimum luminance values by the maximum test point luminance

$$\delta_{W9} = \frac{\text{Minimum Brightness of nine points}}{\text{Maximum Brightness of nine points}}$$

Note 4: Definition of contrast ratio (CR):

$$\text{Contrast ratio (CR)} = \frac{\text{Brightness on the “White” state}}{\text{Brightness on the “Black” state}}$$

Note 5: Definition of response time:

The output signals of photo detector are measured when the input signals are changed from “White” to “Black” (falling time) and from “Black” to “White” (rising time), respectively. The response time interval is between 10% and 90% of amplitudes. Please refer to the figure as below.

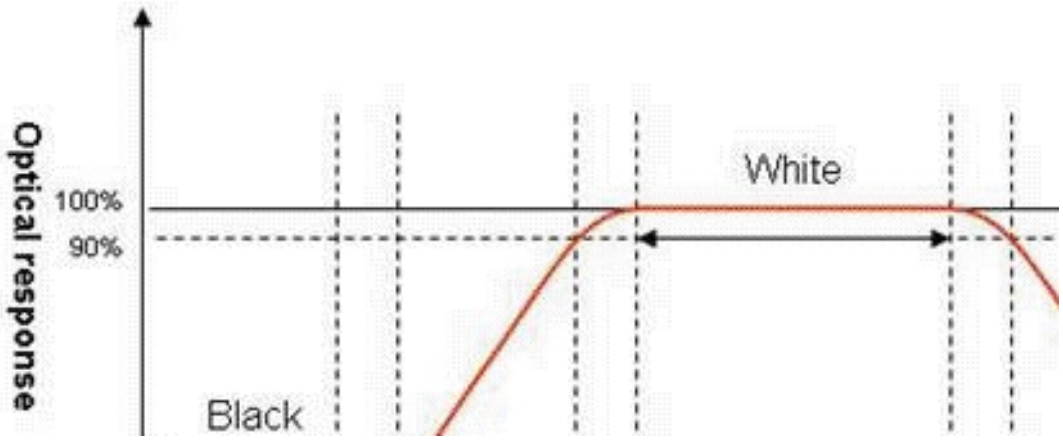

Note 6: Definition of viewing angle

© AUO Display Plus Corporation Proprietary

Viewing angle is the measurement of contrast ratio ≧10, at the screen center, over a 180° horizontal and 180° vertical range (off-normal viewing angles). The 180° viewing angle range is broken down as below: 90° (θ) horizontal left and right, and 90° (Φ) vertical high (up) and low (down). The measurement direction is typically perpendicular to the display surface with the screen rotated to its center to develop the desired measurement viewing angle.

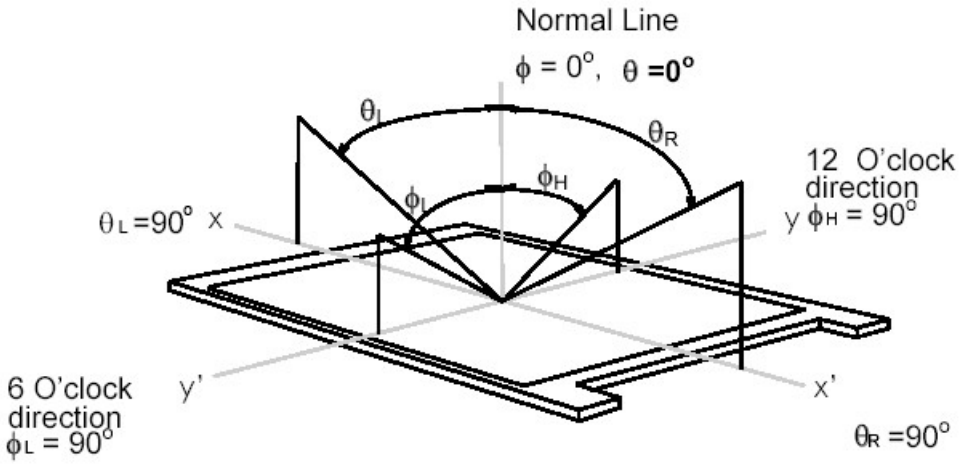

AUO Display+

3. Functional Block Diagram

The following diagram shows the functional block of the 24 inch color TFT/LCD module:

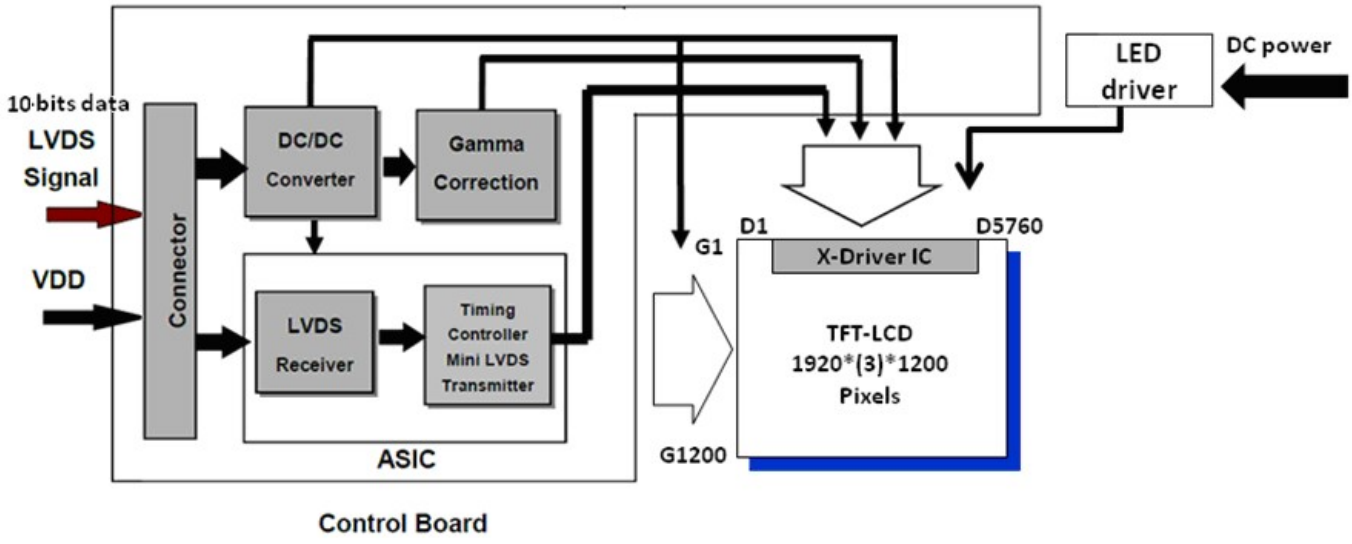

© AUO Display Plus Corporation Proprietary

4. Absolute Maximum Ratings

4.1 Absolute Ratings of TFT LCD Module

Item	Symbol	Min.	Max.	Unit	Conditions
Logic/LCD Drive Voltage	VDD	-0.3	+16.5	[Volt]	Note 1, 2

4.2 Absolute Ratings of Environment

Item	Symbol	Min.	Max.	Unit	Conditions
Operating	TOP	0	+50	[°C]	Note
Operation Humidity	HOP	5	90	[%RH]	
Storage	TST	-20	+60	[°C]	
Storage Humidity	HST	5	90	[%RH]	

Note 1: With in Ta= 25℃

Note 2: Permanent damage to the device may occur if exceed maximum values

Note 3: For quality performance, please refer to AUO IIS (Incoming Inspection Standard).

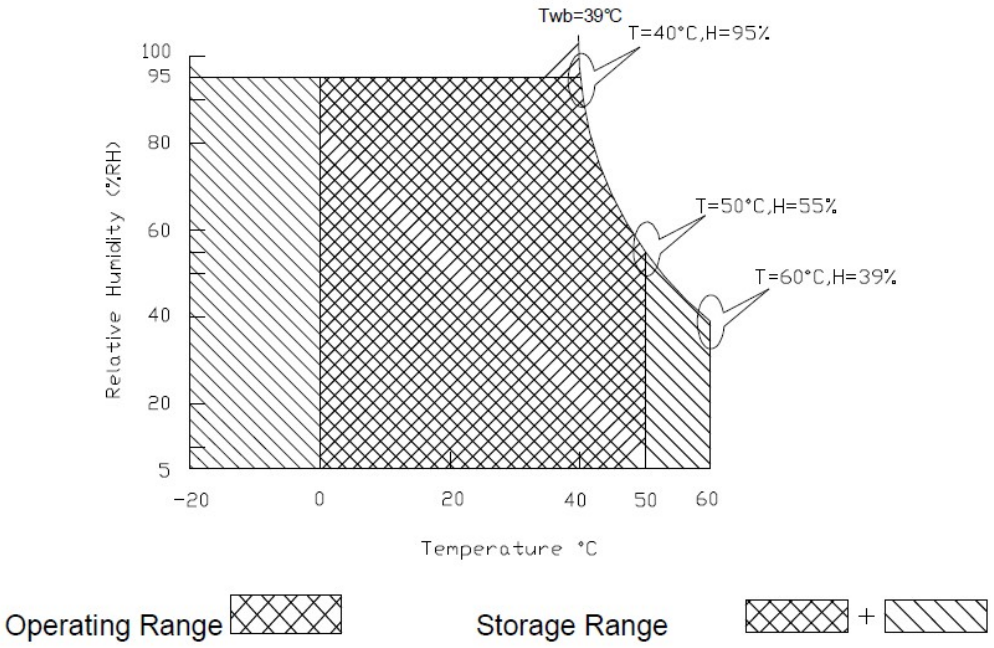

© AUO Display Plus Corporation Proprietary

5. Electrical Characteristics

5.1 TFT LCD Module

5.1.1 Power Specification

Input power specifications are shown as follows;

Symbol	Parameter	Min	Typ	Max	Units	Remark
VDD	Logic/LCD Drive Voltage	10.8	12.0	13.2	[Volt]	±10%
IDD	VDD Current	-	0.4	0.6	[A]	Vin=12V, White Pattern, at 60Hz
Irush	LCD Inrush Current	-	2.7	3.4	[A]	Note 1
PDD	VDD Power	-	4.8	7.2	[Watt]	Vin=12V, White Pattern, at 60Hz
VDDrp	Allowable Logic/LCD Drive Ripple Voltage	-	-	300	[mV] p-p	With panel loading

Note 1: Measurement condition:

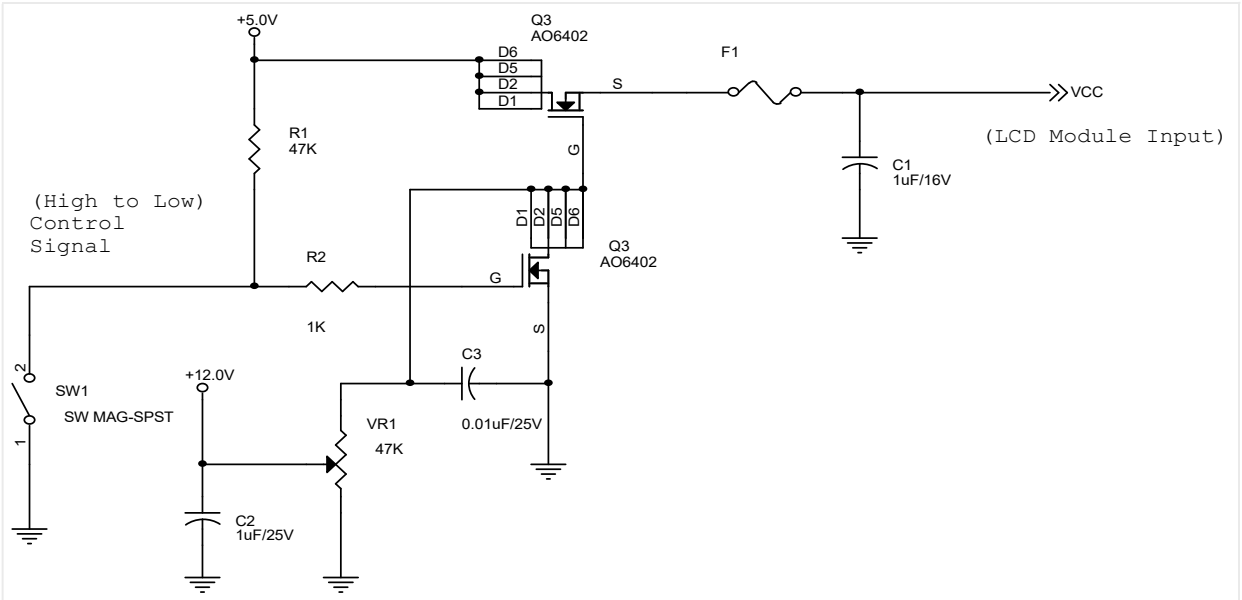

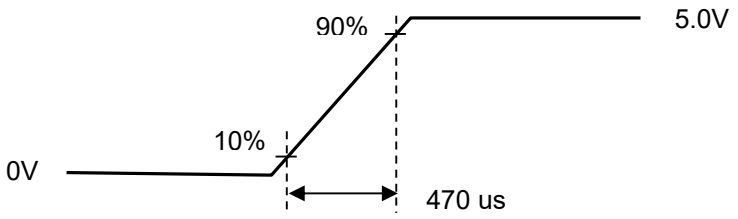

VDD rising time

© AUO Display Plus Corporation Proprietary

5.1.2 LVDS DC Signal Electrical Characteristics

Input signals shall be low or Hi-Z state when VDD is off.

Symbol	Item	Min.	Typ.	Max.	Unit	Remark
VTH	Differential Input High Threshold	-	-	+100	[mV]	VCM=1.2V
VTL	Differential Input Low Threshold	-100	-	-	[mV]	VCM=1.2V
| VID |	Input Differential Voltage	100	-	600	[mV]	
VICM	Differential Input Common Mode Voltage	+1.0	+1.2	+1.5	[V]	VTH/VTL=+-200mV

Note: LVDS Signal Waveform.

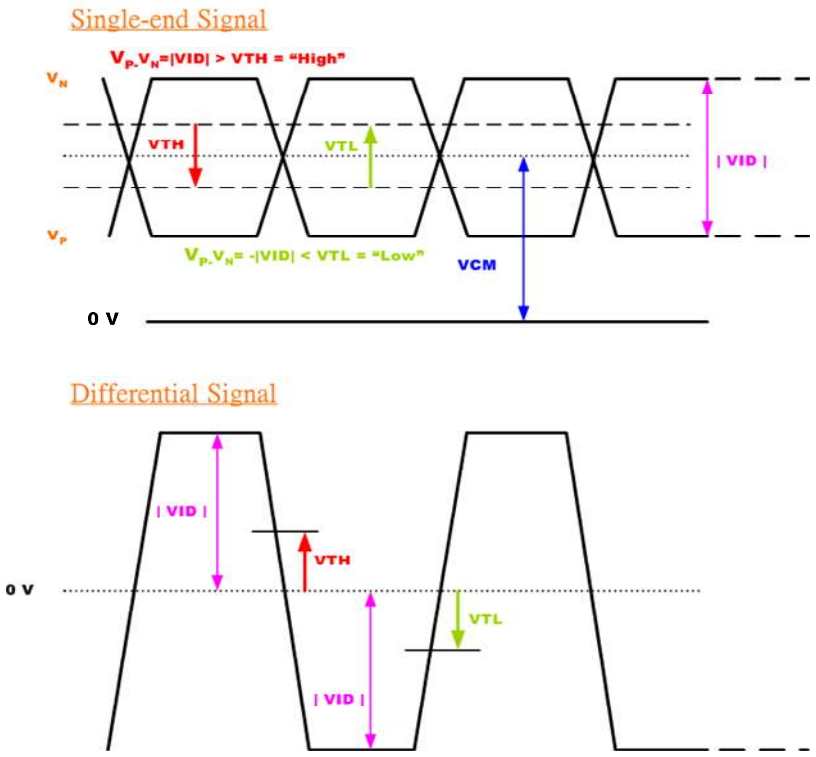

5.2 Backlight Unit

5.2.1 LED Backlight Unit : Driver Connector

Backlight	manufacturer	JST
	part number	S14B-PH-SM6-K-TB(HF)
Mating	manufacturer	JST
	part number	PHR-14

Pin #	Symbol	Pin Description
1	VDD	Power +24V
2	VDD	Power +24V
3	VDD	Power +24V
4	VDD	Power +24V
5	VDD	Power +24V
6	GND	GND
7	GND	GND
8	GND	GND
9	GND	GND
10	GND	GND
11	NC	Do not connect
12	EN	Enable(0V:disable, 3~5V:Enable)
13	Dimming	PWM; duty 10%~ 100%
14	NC	Do not connect

© AUO Display Plus Corporation Proprietary

5.2.2 Parameter guideline for LED

Following characteristics are measured under a stable condition using an inverter at 25℃ (Room Temperature):

LED characteristics

Symbol	Parameter	Min	Typ	Max	Units	Condition
PLED	LED Power Consumption	-	16.38	18.56	Watt	IF =65 mA, Ta = 25℃ LBx2 : 16.38x2=32.76(typ)
LTLED	LED Lifetime	50,000			Hrs	IF=65 mA, Ta= 25℃

Note 1: Calculator value for reference PLED = VF (Normal Distribution) * IF (Normal Distribution) / Efficiency

Note 2: The LED life-time define as the estimated time to 50% degradation of initial luminous.

Backlight input signal characteristics

Symbol	Parameter	Min.	Typ.	Max.	Unit	Remark
VDD	Input Voltage	22.8	24.0	25.2	[Volt]	±5%
I_{VDD}	Input Current		1.71	2.02	[A]	100% PWM Duty
P_{VDD}	Power Consumption		41	48.5	[Watt]	100% PWM Duty
Irush LED	Inrush Current	-	-	6	[A]	at rising time=470us
F_{PWM}	Dimming Frequency	0.1	0.2	20	[kHz]	
	Swing Voltage	3	3.3	5	V	
	Dimming Duty	5	-	100	%	200Hz~5KHz
	Dimming Duty	15	-	100	%	5KHz~20KHz
I_F	LED Forward Current		65		mA	Ta = 25°C
V_F	LED Forward Voltage	-	-	-	Volt	
		-	36	40.8	Volt	I_F =65 mA, Ta = 25°C
		-	-	-		

Note1: Measured on panel VLED

© AUO Display Plus Corporation Proprietary

6. Signal Characteristic

6.1 Pixel Format Image

Following figure shows the relationship between input signal and LCD pixel format.

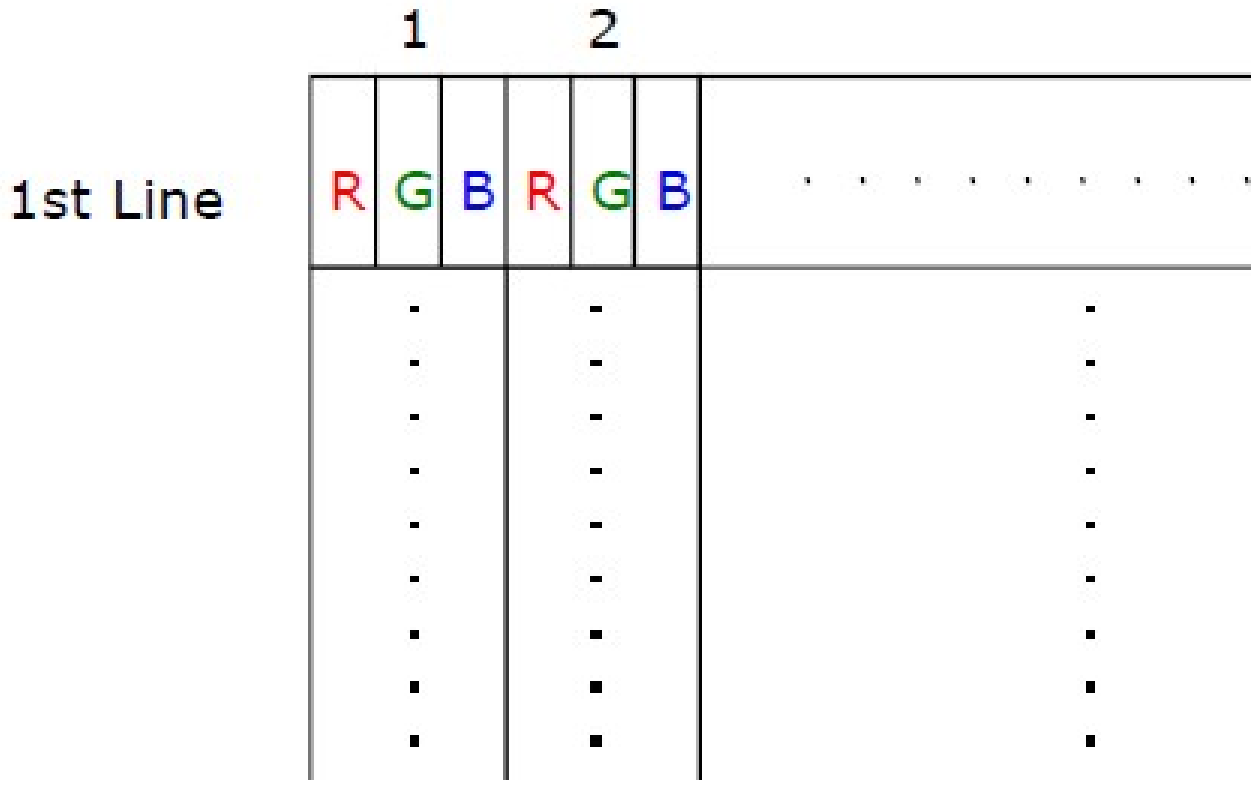

6.2 Scanning Direction

The following figures show the image seen from the front view. The arrow indicates the direction of scan.

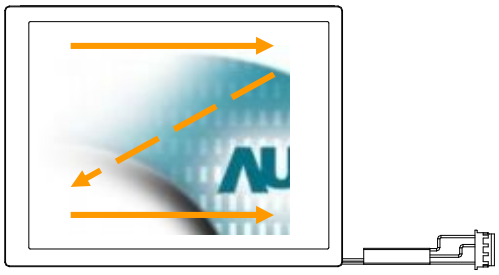

© AUO Display Plus Corporation Proprietary

6.3 Signal Description

LVDS is a differential signal technology for LCD interface and high speed data transfer device. The first LVDS port(RxOxxx) transmits odd pixels while the second LVDS port(RxExxx) transmits even pixels.

6.3.1 TFT LCD Module: LVDS Connector

LCD	manufacturer	JAE
	part number	FI-RE51S-HF-R1500
Mating	manufacturer	JAE
	part number	FI-RE51HL

PIN #	Symbol	PIN #	Symbol
1	GND	27	GND
2	NC	28	RE0N
3	NC	29	RE0P
4	NC	30	RE1N
5	NC	31	RE1P
6	NC	32	RE2N
7	GND	33	RE2P
8	GND	34	GND
9	NC	35	RECLKN
10	GND	36	RECLKP
11	GND	37	GND
12	RO0N	38	RE3N
13	RO0P	39	RE3P
14	RO1N	40	RE4N
15	RO1P	41	RE4P
16	RO2N	42	GND
17	RO2P	43	GND
18	GND	44	GND
19	ROCLKN	45	GND
20	ROCLKP	46	NC
21	GND	47	NC
22	RO3N	48	VDD
23	RO3P	49	VDD
24	RO4N	50	VDD

© AUO Display Plus Corporation Proprietary

25	RO4P	51	VDD
26	GND		

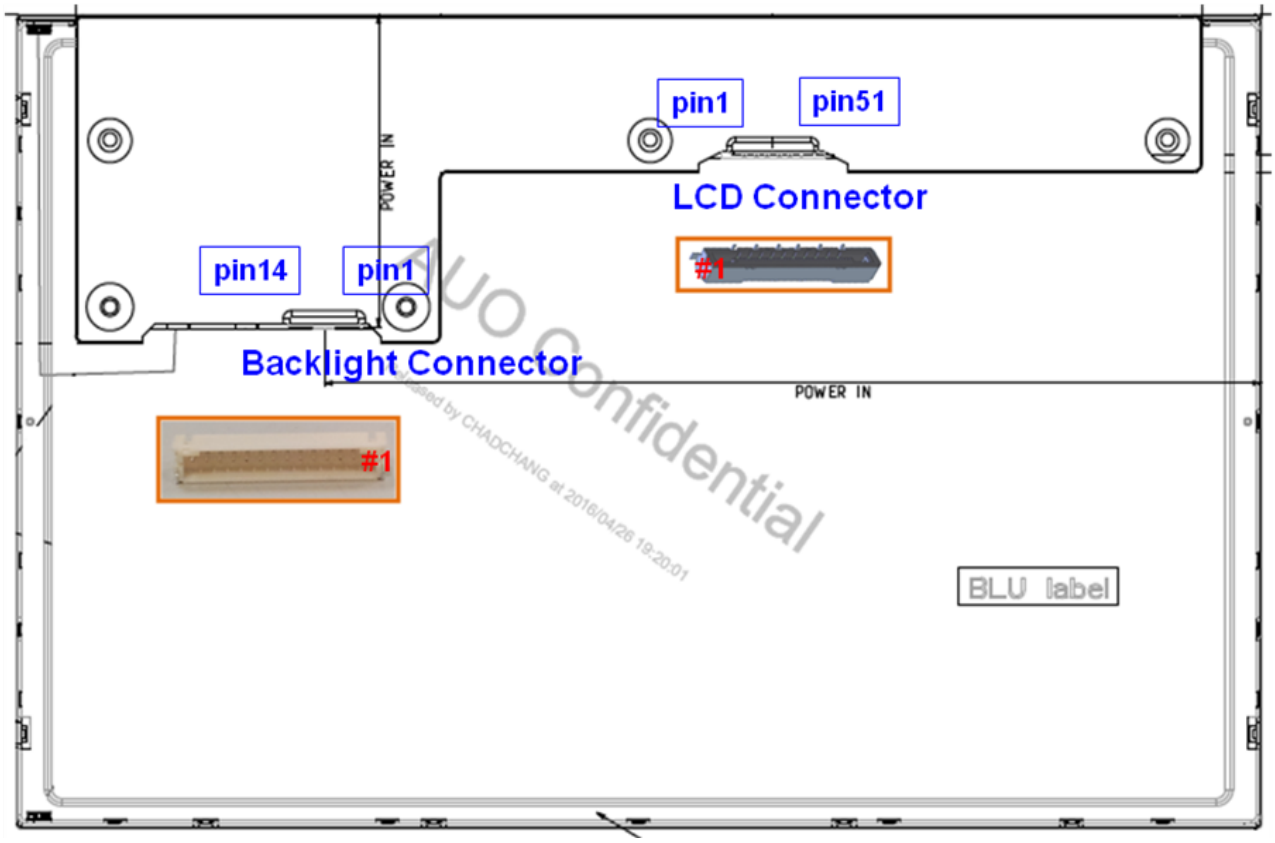

© AUO Display Plus Corporation Proprietary

6.4 The Input Data Format

Data Mapping of JEIDA Format

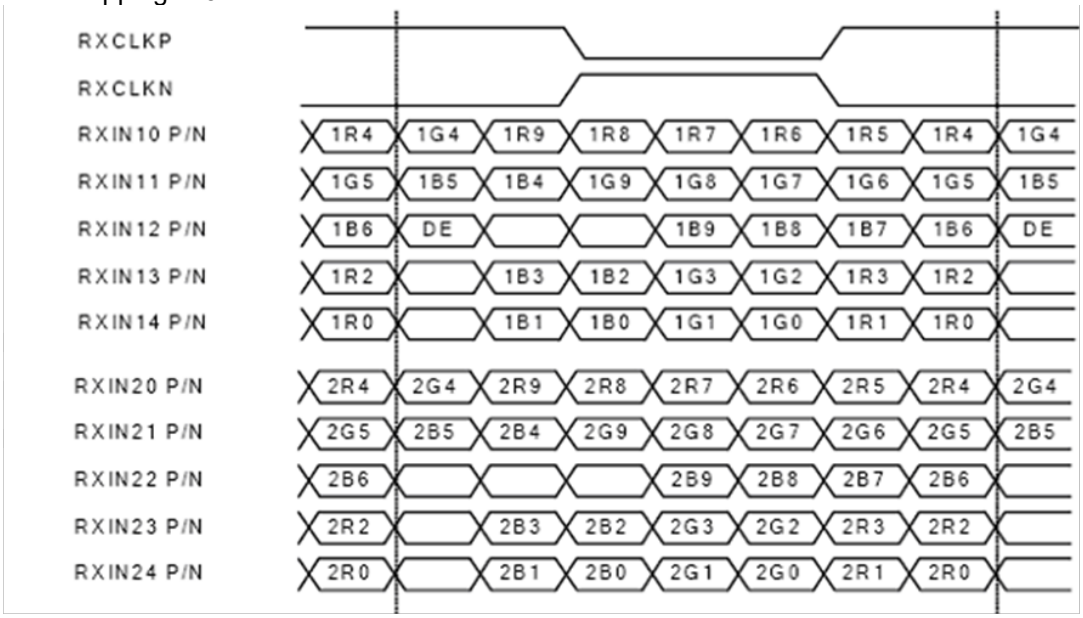

10 BIT COLOR BIT ORDER	
MSB	R9
	R8
	R7
	R6
	R5
	R4
	R3
	R2
	R1
LSB	R0

© AUO Display Plus Corporation Proprietary

6.5 Interface Timing

6.5.1 Timing Characteristics

Signal		Symbol	Min.	Typ.	Max.	Unit
Clock Frequency		1/ T_{Clock}	59.5	77	85	MHz
Vertical Section	Period	T_V	1214	1235	1734	T_{Line}
	Active	T_{VD}	1200	1200	1200	
	Blanking	T_{VB}	14	35	534	
Horizontal Section	Period	T_H	1000	1040	1428	T_{Clock}
	Active	T_{HD}	960	960	960	
	Blanking	T_{HB}	40	80	468	
Frame Rate		F	49	60	66	Hz

Note : DE mode only

© AUO Display Plus Corporation Proprietary

6.5.2 Input Timing Diagram

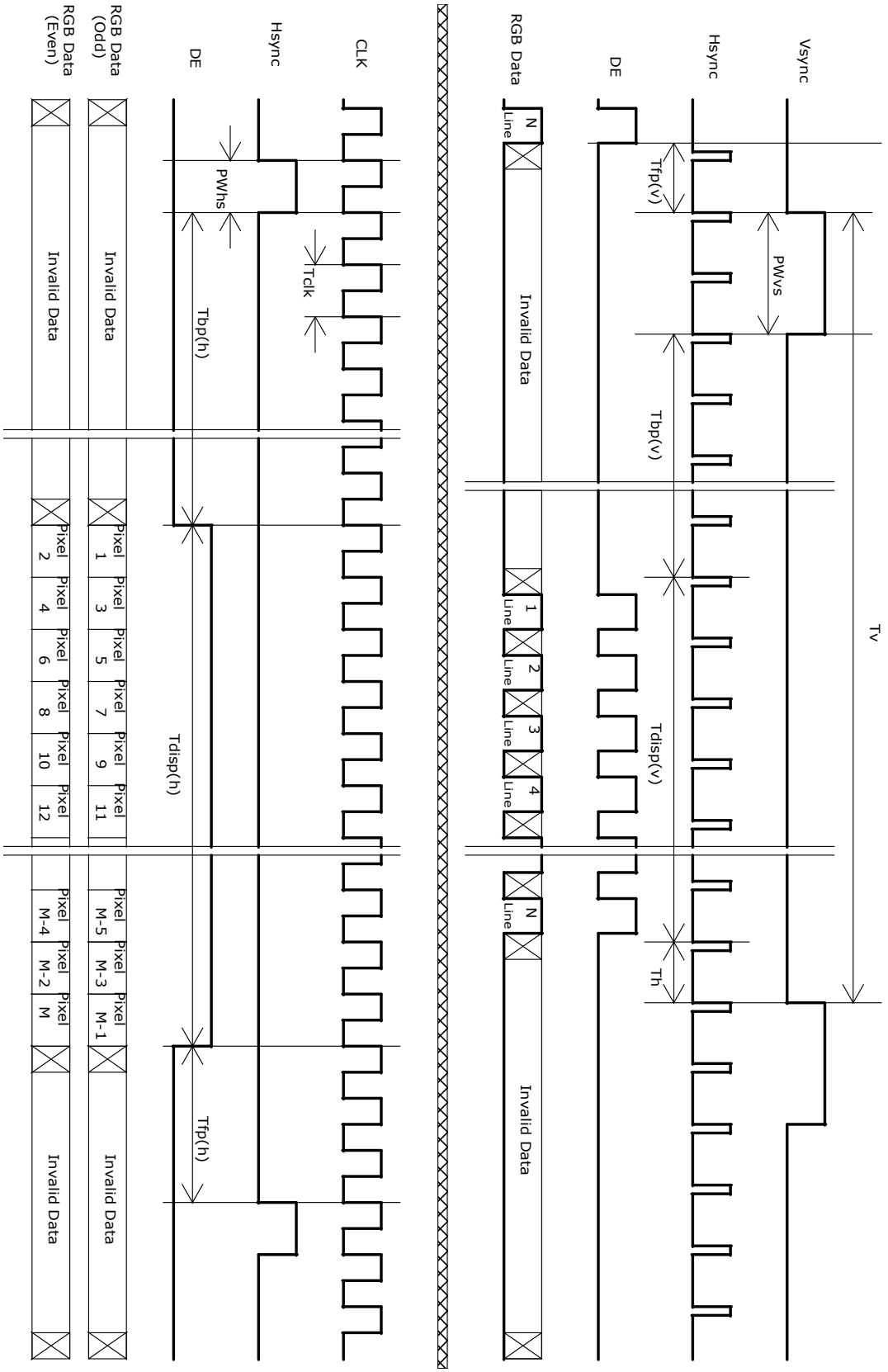

6.6 Power ON/OFF Sequence

VDD power and lamp on/off sequence is as below. Interface signals are also shown in the chart. Signals from any system shall be Hi-Z state or low level when VDD is off.

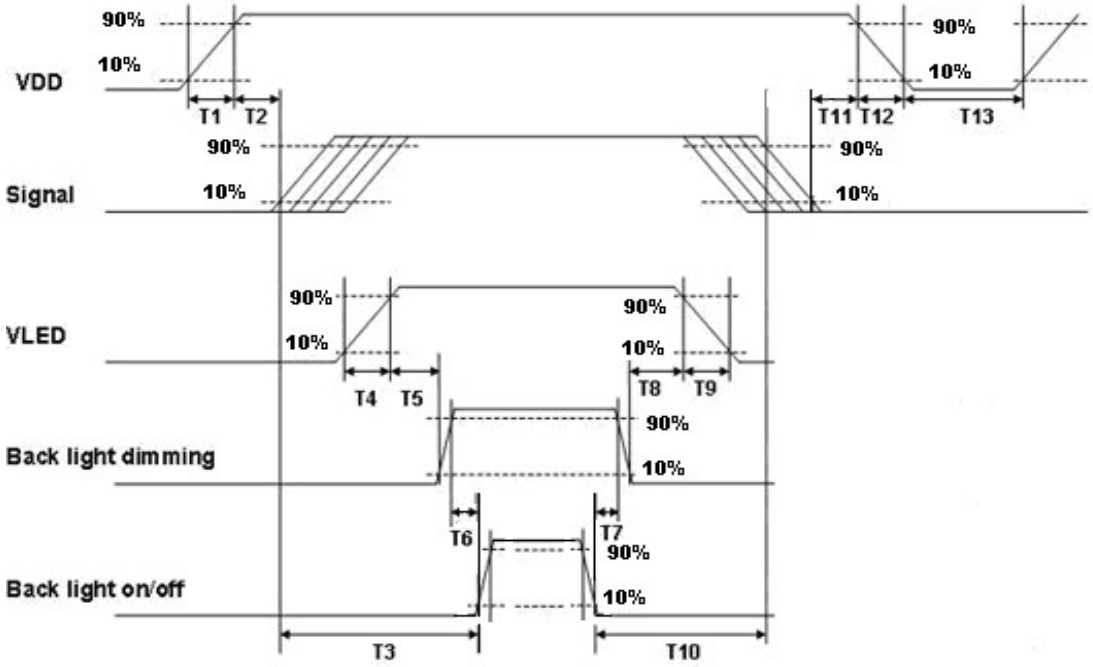

Power ON/OFF sequence timing

Parameter	Value			Units
	Min.	Typ.	Max.	
T1	0.5	-	10	[ms]
T2	30	40	50	[ms]
T3	200	-	--	[ms]
T4	0.5	-	10	[ms]
T5	10	-	-	[ms]
T6	10	-	-	[ms]
T7	0	-	-	[ms]
T8	10	-	-	[ms]
T9	-	-	10	[ms]
T10	110	-	-	[ms]
T11	0	16	50	[ms]
T12	0		10	[ms]
T13	1000	-	-	[ms]

The above on/off sequence should be applied to avoid abnormal function in the display. Please make sure to turn off the power when you plug the cable into the input connector or pull the cable out of the connector.

© AUO Display Plus Corporation Proprietary

7. Reliability Test Criteria

Items	Required Condition	Note
Temperature Humidity Bias (THB)	Ta= 50°C, 80%RH, 300hours	
High Temperature Operation (HTO)	Ta= 50°C, 300hours	
Low Temperature Operation (LTO)	Ta= 0°C, 300hours	
High Temperature Storage (HTS)	Ta= 60°C, 300hours	
Low Temperature Storage (LTS)	Ta= -20°C, 300hours	
Vibration Test (Non-operation)	Acceleration: 1.5 G Wave: Random Frequency: 10 - 200 Hz Sweep: 30 Minutes each Axis (X, Y, Z)	
Shock Test (Non-operation)	Acceleration: 50 G Wave: Half-sine Active Time: 20 ms Direction: ±X, ±Y, ±Z (one time for each Axis)	
Drop Test	Height: 60 cm, package test	
Thermal Shock Test (TST)	-20 °C /30min, 60/ °C 30min, 100 cycles	1
On/Off Test	On/10sec, Off/10sec, 30,000 cycles	
ESD (Electrostatic Discharge)	Contact Discharge: ± 8KV, 150pF(330Ω) 1sec, 9 points, 25 times/ point.	2
	Air Discharge: ± 15KV, 150pF(330Ω) 1sec 9 points, 25 times/ point.	
Altitude Test	Operation:10,000 ft Non-Operation:30,000 ft	

Note 1: The TFT-LCD module will not sustain damage after being subjected to 100 cycles of rapid temperature change. A cycle of rapid temperature change consists of varying the temperature from -20°C to 50°C, and back again. Power is not applied during the test. After temperature cycling, the unit is placed in normal room ambient for at least 4 hours before power on.

Note 2: According to EN61000-4-2 , ESD class B: Some performance degradation allowed. No data lost. Self-recoverable. No hardware failures.

Note 3:

- Water condensation is not allowed for each test items.
- Each test is done by new TFT-LCD module. Don't use the same TFT-LCD module repeatedly for reliability test.
- The reliability test is performed only to examine the TFT-LCD module capability.
- To inspect TFT-LCD module after reliability test, please store it at room temperature and room humidity for 24 hours at least in advance.
- No function failure occurs.

© AUO Display Plus Corporation Proprietary

8. Mechanical Characteristics

8.1 LCM Outline Dimension

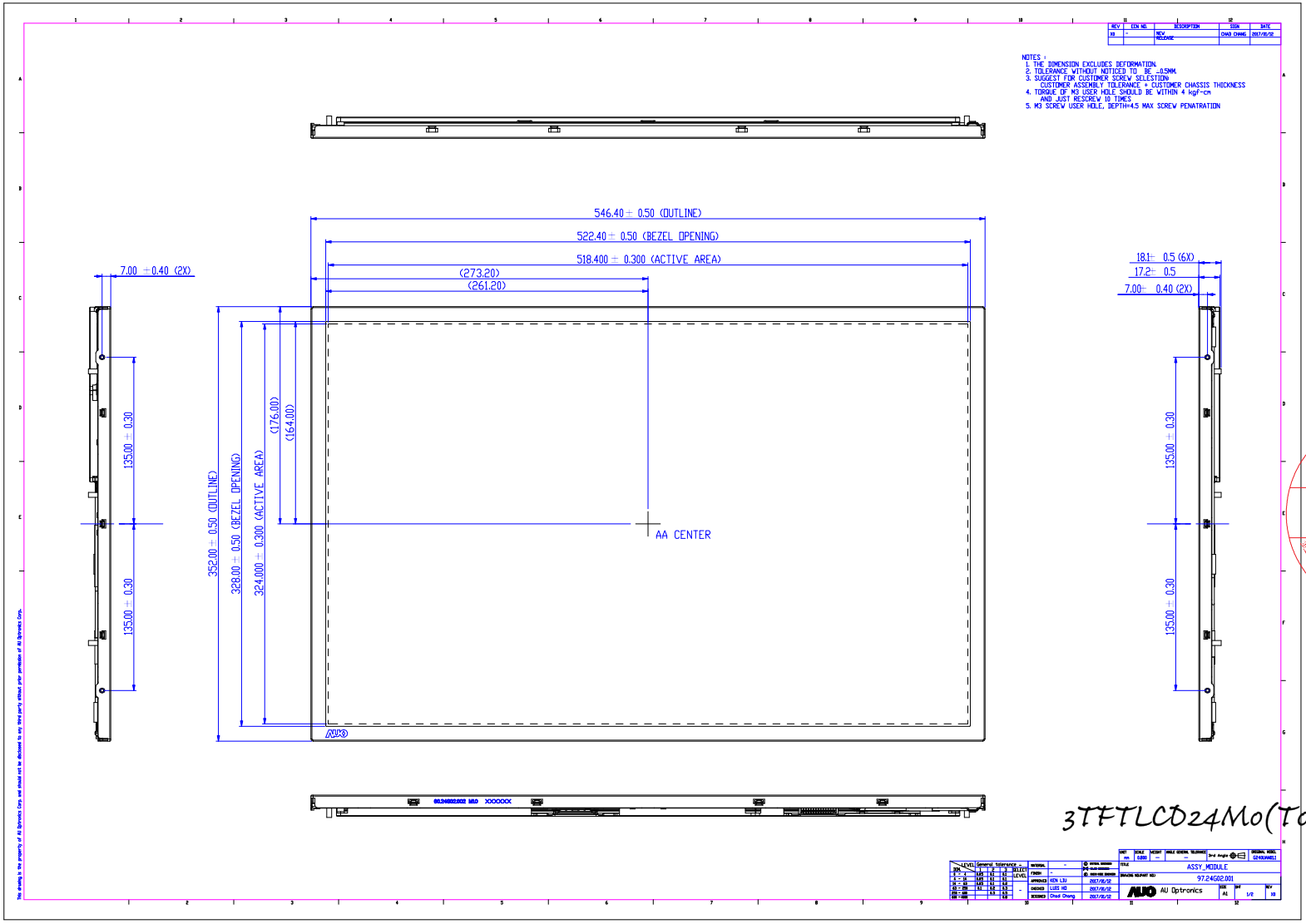

開發部
2023.08.01
發行
宏碁科技開發股份有限公司

3TFTLCD24Mo(T0130)

© AUO Display Plus Corporation Proprietary

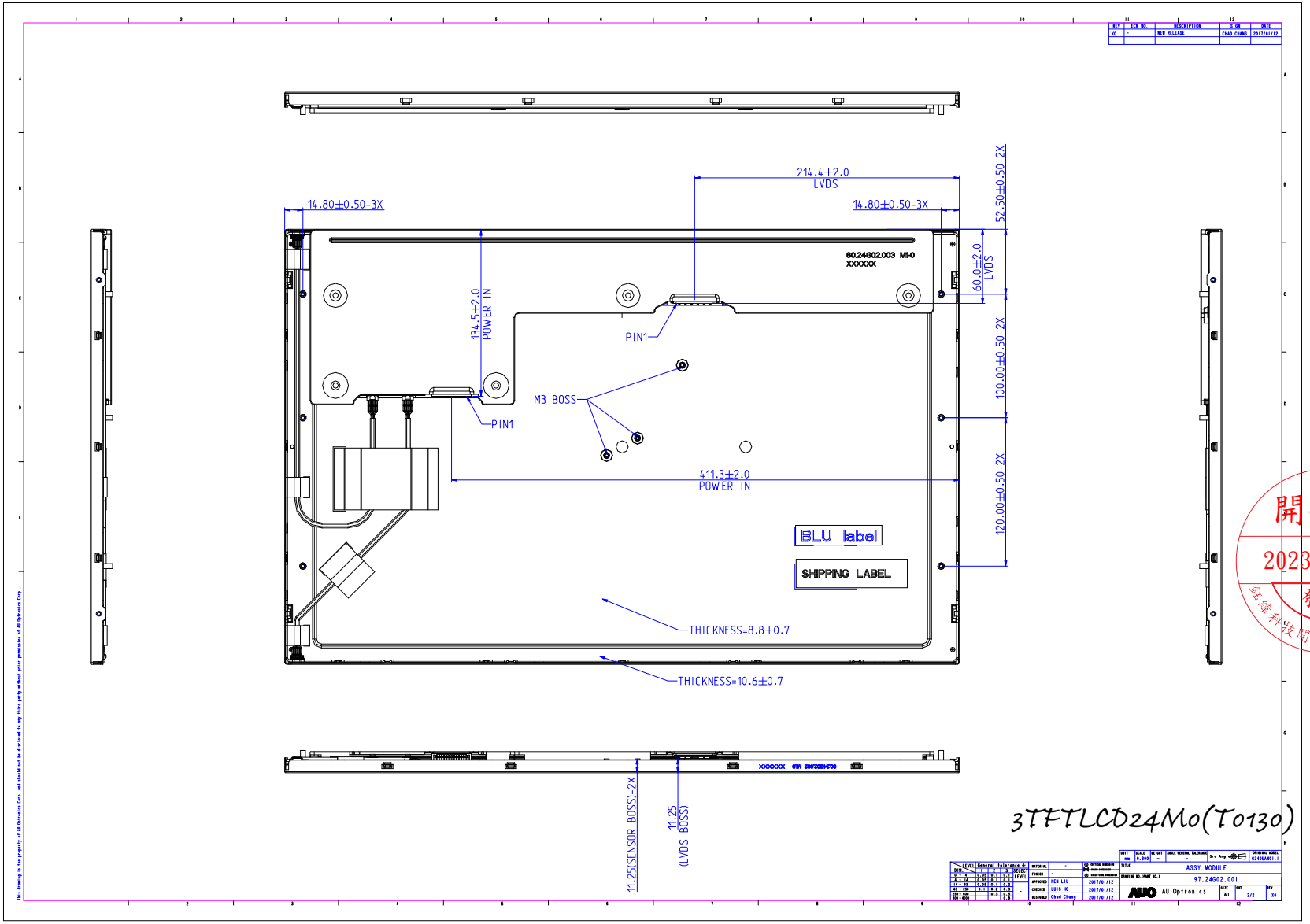

開發部
2023.08.01
發行
(友華科技開發股份有限公司)

© AUO Display Plus Corporation Proprietary

9. Label and Packaging

9.1 Shipping Label (on the rear side of TFT-LCD display)



Note 1: For Pb Free products, AUO will add for identification.

Note 2: For RoHS compatible products, AUO will add for identification.

Note 3: For China RoHS compatible products, AUO will add for identification.

Note 4: The Green Mark will be presented only when the green documents have been ready by AUO Internal Green Team.

9.2 Carton Package

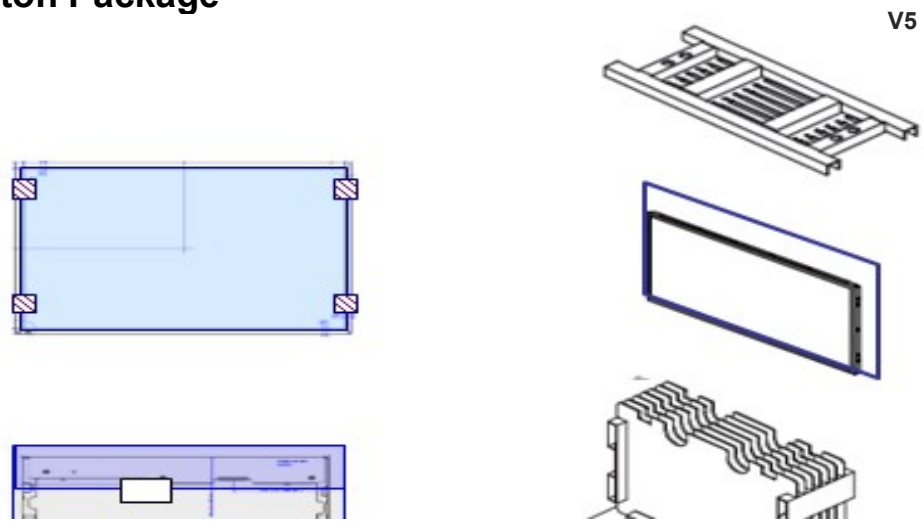

Max capacity：6 PCS TFT-LCD module per carton

Max weight: 17.3 kg per carton

Outside dimension of carton: 630mm(L)* 245mm(W)*450mm(H)

Pallet size： 1060 mm * 760 mm * 132mm

Box stacked

Module by air_Max：(1 *4) *3 layers，one pallet put 12 boxes，total 72pcs module

Module by sea_Max：(1*4) *3 layers + (1 *4) *1 layers , two pallet put 16 boxes，total 96pcs module

Module by sea_HQ_Max：(1*4) *3 layers+(1*4) *1 layers, two pallet put 16 boxes, total 96pcs module

© AUO Display Plus Corporation Proprietary

10 Safety

10.1 Sharp Edge Requirements

There will be no sharp edges or comers on the display assembly that could cause injury.

10.2 Materials

10.2.1 Toxicity

There will be no carcinogenic materials used anywhere in the display module. If toxic materials are used, they will be reviewed and approved by the responsible AUO toxicologist.

10.2.2 Flammability

All components including electrical components that do not meet the flammability grade UL94-V1 in the module will complete the flammability rating exception approval process.

The printed circuit board will be made from material rated 94-V1 or better. The actual UL flammability rating will be printed on the printed circuit board.

10.3 Capacitors

If any polarized capacitors are used in the display assembly, provisions will be made to keep them from being inserted backwards.

10.4 National Test Lab Requirement

The display module will satisfy all requirements for compliance to:

UL 60950-1 second edition	U.S.A. Information Technology Equipment

© AUO Display Plus Corporation Proprietary