Si5391 Data Sheet

Ultra Low-Jitter, 12-Output, Any-Frequency, Any-Output Clock Generator

The any-frequency, any-output Si5391 clock generators combine a wide-band PLL with proprietary MultiSynth™ fractional synthesizer technology to offer a versatile and high performance clock generator platform. This highly flexible architecture is capable of synthesizing a wide range of integer and non-integer related frequencies up to 1 GHz on 12 differential clock outputs while delivering sub-100 fs rms phase jitter performance optimized for 100G/200G/400G applications. Each of the clock outputs can be assigned its own format and output voltage enabling the Si5391 to replace multiple clock ICs and oscillators with a single device making it a true "clock tree on a chip."

The Si5391 can be quickly and easily configured using ClockBuilderPro software. Custom part numbers are automatically assigned using ClockBuilder™ Pro for fast, free, and easy factory pre-programming or the Si5391 can be programmed via I2C and SPI serial interfaces.

KEY FEATURES

- Generates any combination of output frequencies from any input frequency
- Ultra-low jitter performance
  - 69fs RMS (Precision Calibration)
  - 75fs RMS (integer mode)
  - 115fs RMS (fractional mode)
- Input frequency range:
  - External crystal: 25 to 54 MHz
  - Differential clock: 10 to 750 MHz
  - LVCMOS clock: 10 to 250 MHz
- Output frequency range:
  - Differential: 100 Hz to 1028 MHz
  - LVCMOS: 100 Hz to 250 MHz
- Highly configurable outputs compatible with LVDS, LVPECL, LVCMOS, CML, and HCSL with programmable signal amplitude
- Si5391: 4 input, 12 output, 64-QFN 9x9mm

Applications:

- 100/200/400G switches
- 56G/112G PAM4 SerDes reference clocks
- Clock tree generation replacing XOs, buffers, signal format translators
- Clocking for FPGAs, processors, memory
- Ethernet switches/routers
- OTN framers/mappers/processors

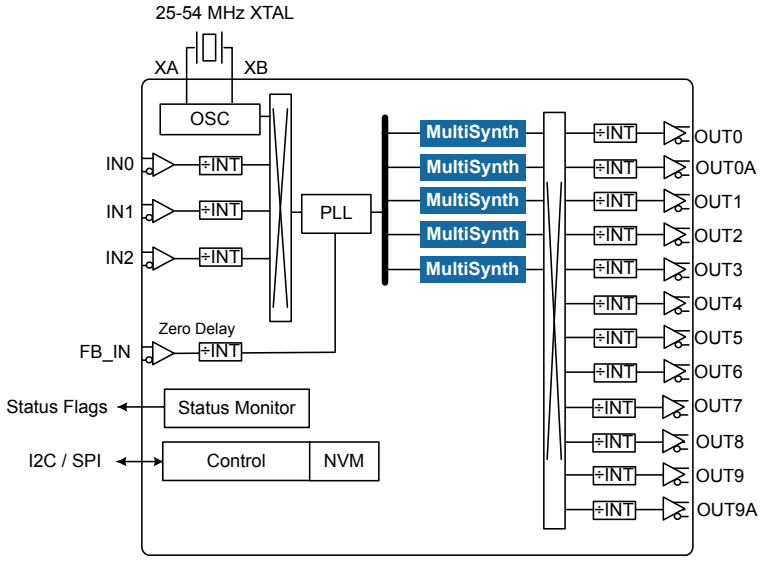

1. Features List

The Si5391 features are listed below:

- Generates any combination of output frequencies from any input frequency
- Ultra-low phase jitter performance
  - 69fs RMS (Precision Calibration)
  - 75fs RMS (integer mode)
  - 115fs RMS (fractional mode)
- Input frequency range:
  - External crystal: 25 to 54 MHz
  - Differential clock: 10 to 750 MHz
  - LVCMOS clock: 10 to 250 MHz
- Output frequency range:
  - Differential: 100 Hz to 1028 MHz
  - LVCMOS: 100 Hz to 250 MHz
- Highly configurable outputs compatible with LVDS, LVPECL, LVCMOS, CML, and HCSL with programmable signal amplitude
- Optional zero delay mode
- Glitchless on the fly output frequency changes
- DCO mode: as low as 0.001 ppb steps
- Core voltage
  - VDD: 1.8 V ±5%
  - VDDA: 3.3 V ±5%
- Independent output clock supply pins
  - 3.3 V, 2.5 V, or 1.8 V
- Serial interface: I2C or SPI
- In-circuit programmable with non-volatile OTP memory
- ClockBuilder Pro software simplifies device configuration
- 64-QFN 9x9mm
- Temperature range: –40 to +85 °C
- Pb-free, RoHS-6 compliant

2. Related Documents

Document/Resource	Description/URL
Si5391 Family Reference Manual	https://www.skyworksinc.com/-/media/Skyworks/SL/documents/public/reference-manuals/si5391-reference-manual.pdf
Crystal Reference Manual	https://www.skyworksinc.com/-/media/Skyworks/SL/documents/public/reference-manuals/si534x-8x-9x-recommended-crystals-rm.pdf
Si5391A-A-EVB User Guide	https://www.skyworksinc.com/-/media/Skyworks/SL/documents/public/user-guides/ug352-si5391a-a-evb.pdf
Quality and Reliability	https://www.skyworksinc.com/Quality
Development Kits	https://www.skyworksinc.com/en/Products/Timing
ClockBuilder Pro (CBPro) Software	https://www.skyworksinc.com/en/Application-Pages/Clockbuilder-Pro-Software

3. Ordering Guide

Table 3.1. Si5391 Ordering Guide

Ordering Part Number (OPN)	Number of Input/Output Clocks	Output Clock Frequency Range (MHz)	Frequency Synthesis Mode	Package	Temperature Range
Si5391A-A-GM[1, 2]	4/12	0.001 to 1028	Integer and Fractional	64-QFN 9x9mm	-40 to 85C
Si5391B-A-GM[1, 2]		0.001 to 350			
Si5391C-A-GM[1, 2]		0.001 to 1028	Integer Only		
Si5391D-A-GM[1, 2]		0.001 to 350			
Si5391P-A-GM	Crystal / 12	Up to 3 domains (see 4.5.2 Grade P)	Precision Calibration		
Si5391A-A-EVB	4 / 12	Any-Frequency, Any Output	Integer and Fractional	Evaluation Board (A/B/C/D Grades)	
Si5391P-A-EVB	Crystal /12	Ultra low jitter clocks for 56G/112G SerDes	Precision Calibration	Evaluation Board (P Grade)	

Note:

1. Add an R at the end of the OPN to denote tape and reel ordering options.
2. Custom, factory pre-programmed devices are available. Ordering part numbers are assigned by Skyworks and the ClockBuilder Pro software utility. Custom part number format is: e.g., Si5391A-Axxxxx-GM, where "xxxxx" is a unique numerical sequence representing the preprogrammed configuration.

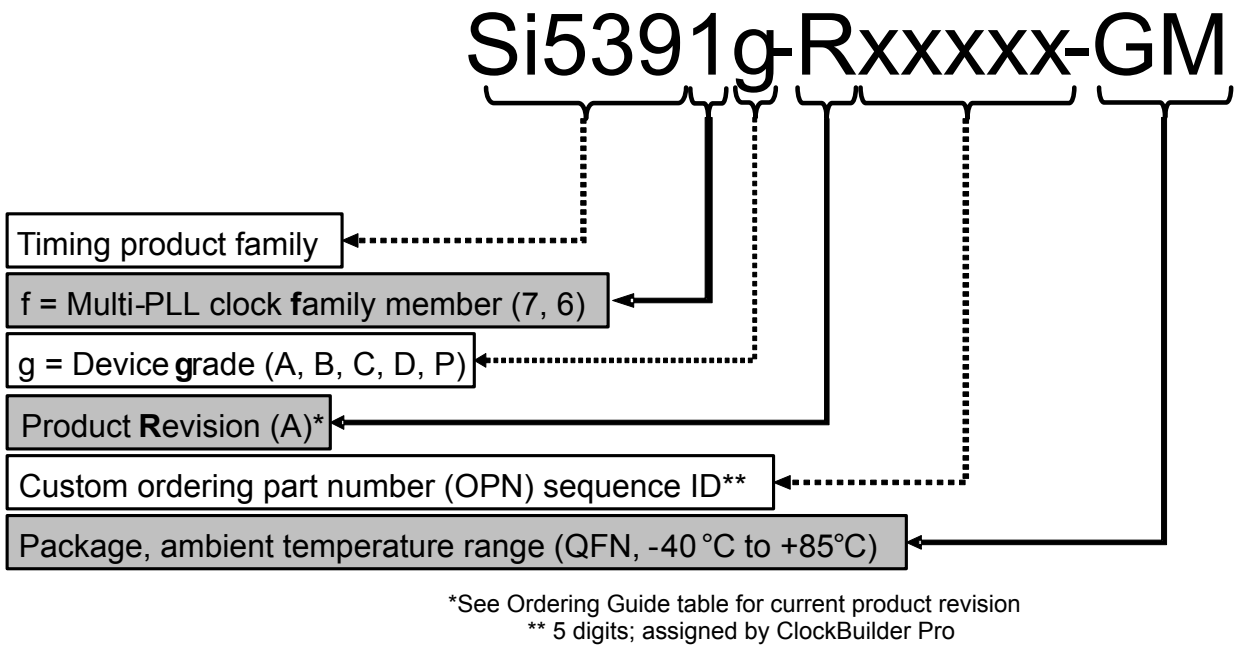

Figure 3.1. Ordering Part Number Fields