



設計驗證
工程課
2023.09.21
發行
台灣科技開發股份有限公司

雄業實業股份有限公司

樣 品 承 認 書



客　　戶：	鈺緯科技
料　　號：	3MDLTWME020(M1712)
品　　名：	BASE
日　　期：	112/9/14
送樣數量：	3　　PCS



REV.	DATE	DESCRIPTION	BY	ARRD

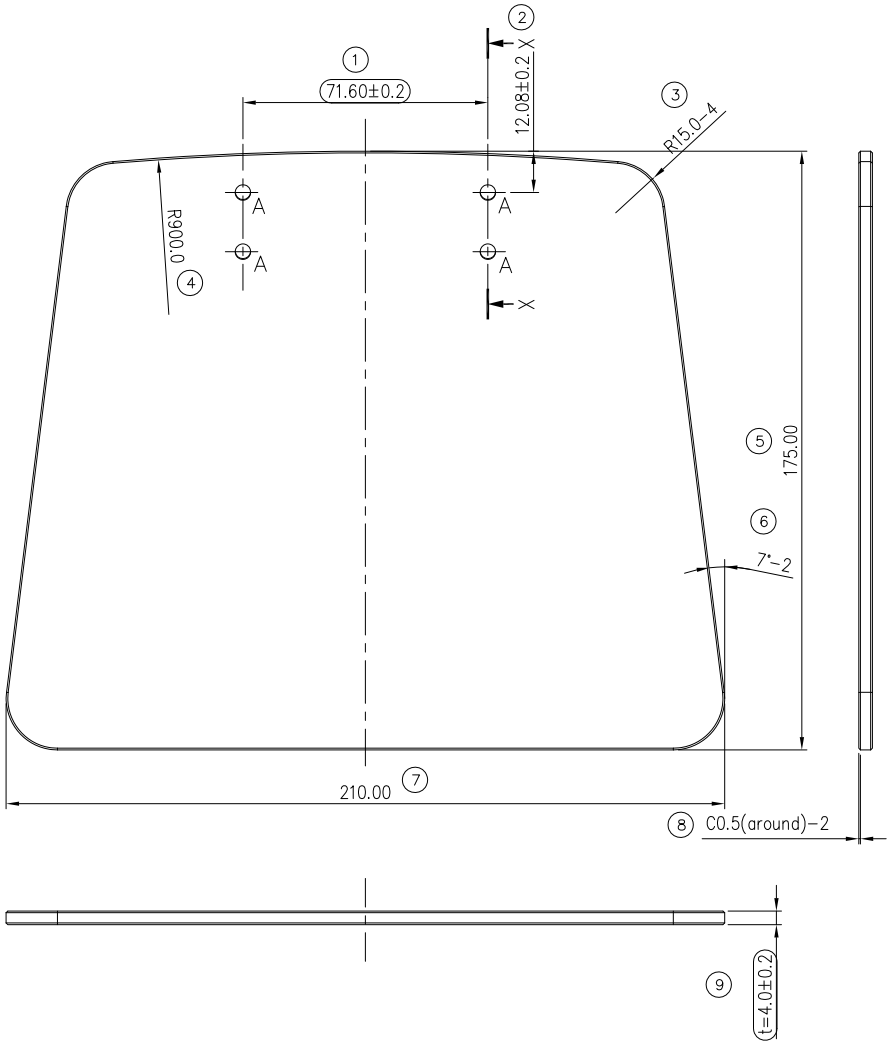

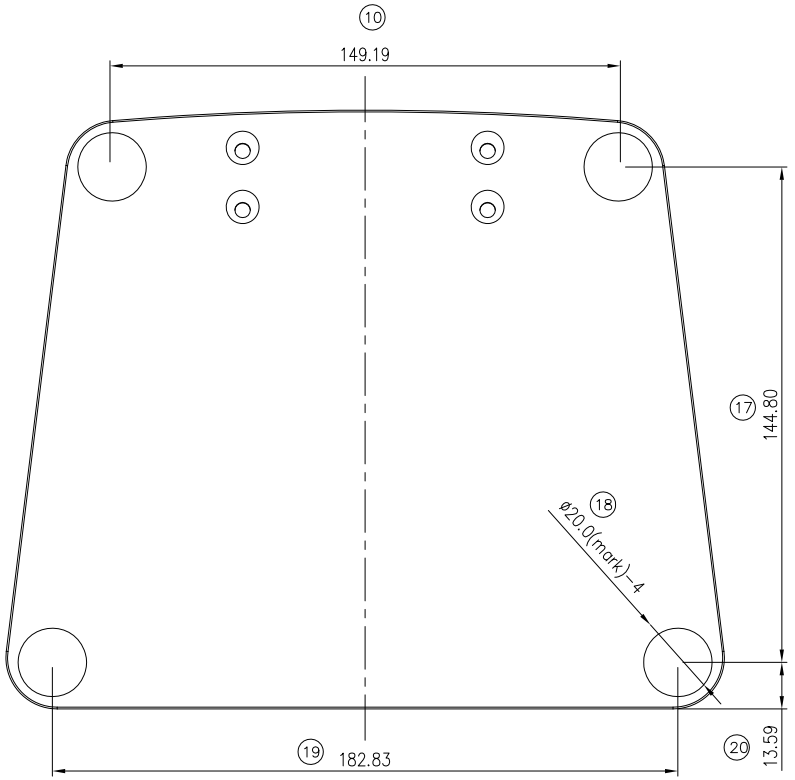

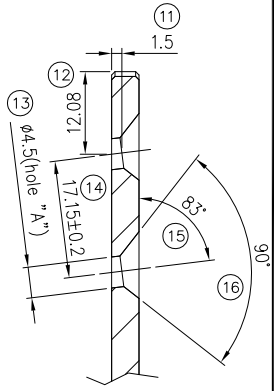

SECTION X-X (2 : 1)

6	3MDLTWME140	WHITE (RAL9002)		M1712	
5	3MDLTWME110	WHITE (White-N9)		M1712	
4	3MDLTWME090	WHITE (W96313)		M1712	
3	MDLTWME060	WHITE (D009)		M1706	
2	3MDLTWME030	WHITE (5897)		M1646	
1	3MDLTWME020	BLACK (5816)		M1712	
	PART No.	PAINTING COLOR	USED ON	APPD No.	REMARK

設計驗證
工程課
2023.09.21
發行
鈺鐘科技開發股份有限公司

註 ：
5. 鑽孔及CNC毛邊須去除.
4. 尺寸依據圖面為主, 毛邊, 切斷面, 參照承認樣品.
3. 織紋烤漆顏色及紋路請參照色板
2. 不可有髒污及油污 .
1. 需符合RoSH.

RANGE OF DIMENSION	TOLERANCE CLASS DESIGNATION		
	f	V m	c
UP TO 30	±0.10	±0.20	±0.50
ABOVE 30~120	±0.15	±0.30	±0.80
ABOVE 120~315	±0.20	±0.50	±1.20
ABOVE 315~1000	±0.30	±0.80	±2.00
ANGLE ±1° (±1.75/100)			

THIRD ANGLE PROJECTION	UNITS : mm	SCALE : 1 / 1	SHEET : 1 / 1	MODEL NO.: METAL TILT STAND
	MATERIAL :spcc,t4.0		TREATMENT : painting	
DSGD by Joe	2018/09/19	PART NAME: BASE		
APPD by	20230921	PART NO.: SEE NOTES		VER. 0
APPD No. : SEE NOTES	FILE NAME : MDLTWMEBAS	DIVA Laboratories ,Ltd.		

Test Result	

DIVA FAI DATA SHEET

Part Number :	3MDLTWME020 (M1712)	Supplier :	雄業	Date:	2023/9/14
Part Description :	BASE			Cavity / Tool # :	
Revision :	0	Material Spec:	SPCC T=4.0mm	Inspector:	李宥廷

MOI-Method of inspection abbreviation: HG = Height gauge, MIC = Micrometer, DC = Dial Caliper, P = Protractor, OC = Optical Comparator, CG = Checking Gauge, CMM = Coordinate Measuring Machine, OMM = Optical Coordinate Measuring Machine, HT = Hardness Trester, TG = Thickness Gauge, VIS = V D

OTHER:

DRAWING SPECIFICATIONS						INSPECTION RESULTS							INSPECTION ANALYSIS					
						Sample Number							% Tolerance		Alert/Rej		Supplier	RD Engineering
ITEM	LOCATION	NOMINAL	+TOL	-TOL	Method	1	2	3	1	2	3	Mean	UPPER	LOWER	HIGH	LOW	Remarks	Disposition
1	A3	71.60	0.20	0.20		71.720	71.760	71.740	0.120	0.160	0.140	71.740	80%	0%	Alert			
2	A4	12.08	0.20	0.20		12.220	12.200	12.200	0.140	0.120	0.120	12.207	70%	0%	Alert			
3	A5	15.00	0.20	0.20		15.060	15.100	15.040	0.060	0.100	0.040	15.067	50%	0%				
4	B2	90.00	0.30	0.30		90.060	90.120	90.100	0.060	0.120	0.100	90.093	40%	0%				
5	C5	175.00	0.50	0.50		175.120	175.160	175.200	0.120	0.160	0.200	175.160	40%	0%				
6	D5	7.00	1.00	1.00		7.260	7.340	7.300	0.260	0.340	0.300	7.300	34%	0%				
7	E3	210.00	0.50	0.50		210.100	210.060	210.140	0.100	0.060	0.140	210.100	28%	0%				
8	E5	0.50	0.20	0.20		0.530	0.490	0.550	0.030	-0.010	0.050	0.523	25%	5%				
9	F5	4.00	0.20	0.20		4.160	4.120	4.140	0.160	0.120	0.140	4.140	80%	0%	Alert			
10	B8	149.19	0.50	0.50		149.260	149.300	149.280	0.070	0.110	0.090	149.280	22%	0%				
11	B12	1.50	0.20	0.20		1.520	1.540	1.550	0.020	0.040	0.050	1.537	25%	0%				
12	B11	12.08	0.20	0.20		12.120	12.100	12.120	0.040	0.020	0.040	12.113	20%	0%				
13	B11	4.50	0.20	0.20		4.500	4.490	4.520	0.000	-0.010	0.020	4.503	10%	5%				
14	B11	17.15	0.20	0.20		17.200	17.260	17.240	0.050	0.110	0.090	17.233	55%	0%				
15	B12	83.00	1.00	1.00		83.500	83.760	83.610	0.500	0.760	0.610	83.623	76%	0%	Alert			
16	B12	90.00	1.00	1.00		90.520	90.600	90.430	0.520	0.600	0.430	90.517	60%	0%				
17	C11	144.80	0.50	0.50		144.860	144.920	144.900	0.060	0.120	0.100	144.893	24%	0%				
18	D9	20.00	0.20	0.20		20.060	20.020	20.040	0.060	0.020	0.040	20.040	30%	0%				
19	E8	182.83	0.50	0.50		182.920	182.960	182.900	0.090	0.130	0.070	182.927	26%	0%				
20	E10	13.59	0.20	0.20		13.620	13.570	13.640	0.030	-0.020	0.050	13.610	25%	10%				
21		以下空白																
22																		
23																		
24																		
25																		
26																		
27																		
28																		
29																		
30																		

Instructions:
1.Inspector mest fillout the yellow area.
2. The table will automatically calculate the data in green area.

雄業實業股份有限公司

■ 組立
□ 沖壓

製程作業標準書

頁次： 1/1
文件編號: PA-SOP-3MDLTWME020-A0

客戶	鈺緯	機種		料號	3MDLTWME020(M1712)	品名	BASE BLACK 5816
工段		作業別	外觀檢查 包裝	機台編號		噸數		材質	酸洗板 4.0t

使用工具 / 機台設定		零組件 / 數量	
1		1	3-1號箱
2		2	
3		3	
4		4	

工序內容	
1	烤漆-BLACK 5816
2	單一包裝 10pcs/箱
3	掛勾痕要補漆
4	
5	
6	
7	
8	
9	
10	







作業重點	
1	不可變形、壓傷、刮傷、生鏽、油汙
2	刮傷小於0.15MM不計 大於0.15-0.25MM一邊一個全部2個
3	汙點小於0.35不計 大於0.5mm一邊一個全部2個
4	烤漆異物小於0.5允許一個
5	
6	

不良履歷			
1		4	
2		5	
3		6	

核准		審核		製表	

製表日期	版本	修定內容
112.09.14	A0	新訂

測試報告
Test Report

號碼(No.): EKR23701425　　日期(Date): 15-Aug-2023　　頁數(Page) : 1 of 8

中國鋼鐵股份有限公司 (CHINA STEEL CORPORATION)
高雄市小港區中鋼路1號 (1 CHUNG KANG ROAD, HSIAO KANG, KAOHSIUNG 812401, TAIWAN, REPUBLIC OF CHINA)

以下測試樣品係由申請廠商所提供及確認 (The following sample(s) was/were submitted and identified by the applicant as)：

送樣廠商(Sample Submitted By)	:	中國鋼鐵股份有限公司 (CHINA STEEL CORPORATION)
樣品名稱(Sample Name)	:	熱軋酸洗塗油鋼捲 (HOT ROLLED PICKLED-AND-OILED COIL)

==========

收件日(Sample Receiving Date)	:	20-Jul-2023
測試期間(Testing Period)	:	20-Jul-2023 to 15-Aug-2023

測試需求(Test Requested) : 依據客戶指定，參考RoHS 2011/65/EU Annex II及其修訂指令(EU) 2015/863測試鎘、鉛、汞、六價鉻、多溴聯苯、多溴聯苯醚, DBP, BBP, DEHP, DIBP。 (As specified by client, with reference to RoHS 2011/65/EU Annex II and amending Directive (EU) 2015/863 to determine Cadmium, Lead, Mercury, Cr(VI), PBBs, PBDEs, DBP, BBP, DEHP, DIBP contents in the submitted sample(s).)

測試結果(Test Results) : 請參閱下一頁 (Please refer to following pages.)

結　論(Conclusion) : 根據客戶所提供的樣品，其鎘、鉛、汞、六價鉻、多溴聯苯、多溴聯苯醚, DBP, BBP, DEHP, DIBP的測試結果符合RoHS 2011/65/EU Annex II暨其修訂指令(EU) 2015/863之限值要求。 (Based on the performed tests on submitted sample(s), the test results of Cadmium, Lead, Mercury, Cr(VI), PBBs, PBDEs, DBP, BBP, DEHP, DIBP comply with the limits as set by RoHS Directive (EU) 2015/863 amending Annex II to Directive 2011/65/EU.)

報告簽署人/張伯睿 博士/部經理
Ray Chang, Ph.D./ Department Manager
Signed for and on behalf of
SGS TAIWAN LTD.
化學實驗室-高雄/Chemical Laboratory-Kaohsiung

CHECK REPORT
PIN CODE: 3255E741

This document is issued by the Company subject to its General Conditions of Service printed overleaf, available on request or accessible at https://www.sgs.com.tw/terms-of-service and, for electronic format documents, subject to Terms and Conditions for Electronic Documents at https://www.sgs.com.tw/terms-of-service. Attention is drawn to the limitation of liability, indemnification and jurisdiction issues defined therein. Any holder of this document is advised that information contained hereon reflects the Company's findings at the time of its intervention only and within the limits of client's instruction, if any. The Company's sole responsibility is to its Client and this document does not exonerate parties to a transaction from exercising all their rights and obligations under the transaction documents. This document cannot be reproduced, except in full, without prior written approval of the Company. Any unauthorized alteration, forgery or falsification of the content or appearance of this document is unlawful and offenders may be prosecuted to the fullest extent of the law. Unless otherwise stated the results shown in this test report refer only to the sample(s) tested.

測試報告
Test Report

中國鋼鐵股份有限公司 (CHINA STEEL CORPORATION)
高雄市小港區中鋼路1號 (1 CHUNG KANG ROAD, HSIAO KANG, KAOHSIUNG 812401, TAIWAN, REPUBLIC OF CHINA)

測試部位敘述 (Test Part Description)

No.1 : 銀灰色金屬 (SILVER GRAY METAL)

測試結果 (Test Results)

測試項目 (Test Items)	測試方法 (Method)	單位 (Unit)	MDL	結果 (Result) No.1	限值 (Limit)
鎘 (Cd) (Cadmium (Cd))	依據IEC 62321-5: 2013，以感應耦合電漿發射光譜儀分析。(According to IEC 62321-5: 2013, analysis was performed by ICP-OES.)	mg/kg	2	n.d.	100
鉛 (Pb) (Lead (Pb))		mg/kg	2	n.d.	1000
汞 (Hg) (Mercury (Hg))	依據IEC 62321-4: 2013+ AMD1: 2017，以感應耦合電漿發射光譜儀分析。(According to IEC 62321-4: 2013+ AMD1: 2017, analysis was performed by ICP-OES.)	mg/kg	2	n.d.	1000
六價鉻 (Hexavalent Chromium) Cr(VI) (#2)	依據IEC 62321-7-1: 2015，以紫外光-可見光分光光度計分析。(According to IEC 62321-7-1: 2015, analysis was performed by UV-VIS.)	μg/cm²	0.1	n.d.	-
一溴聯苯 (Monobromobiphenyl)	參考IEC 62321-6: 2015自訂方法，以氣相層析儀/質譜儀分析。(With reference to IEC 62321-6: 2015 in house method, analysis was performed by GC/MS.)	mg/kg	5	n.d.	-
二溴聯苯 (Dibromobiphenyl)		mg/kg	5	n.d.	-
三溴聯苯 (Tribromobiphenyl)		mg/kg	5	n.d.	-
四溴聯苯 (Tetrabromobiphenyl)		mg/kg	5	n.d.	-
五溴聯苯 (Pentabromobiphenyl)		mg/kg	5	n.d.	-
六溴聯苯 (Hexabromobiphenyl)		mg/kg	5	n.d.	-
七溴聯苯 (Heptabromobiphenyl)		mg/kg	5	n.d.	-
八溴聯苯 (Octabromobiphenyl)		mg/kg	5	n.d.	-
九溴聯苯 (Nonabromobiphenyl)		mg/kg	5	n.d.	-
十溴聯苯 (Decabromobiphenyl)		mg/kg	5	n.d.	-
多溴聯苯總和 (Sum of PBBs)		mg/kg	-	n.d.	1000

This document is issued by the Company subject to its General Conditions of Service printed overleaf, available on request or accessible at https://www.sgs.com.tw/terms-of-service and, for electronic format documents, subject to Terms and Conditions for Electronic Documents at https://www.sgs.com.tw/terms-of-service. Attention is drawn to the limitation of liability, indemnification and jurisdiction issues defined therein. Any holder of this document is advised that information contained hereon reflects the Company's findings at the time of its intervention only and within the limits of client's instruction, if any. The Company's sole responsibility is to its Client and this document does not exonerate parties to a transaction from exercising all their rights and obligations under the transaction documents. This document cannot be reproduced, except in full, without prior written approval of the Company. Any unauthorized alteration, forgery or falsification of the content or appearance of this document is unlawful and offenders may be prosecuted to the fullest extent of the law. Unless otherwise stated the results shown in this test report refer only to the sample(s) tested.

測試報告
Test Report

中國鋼鐵股份有限公司 (CHINA STEEL CORPORATION)
高雄市小港區中鋼路1號 (1 CHUNG KANG ROAD, HSIAO KANG, KAOHSIUNG 812401, TAIWAN, REPUBLIC OF CHINA)

測試項目 (Test Items)	測試方法 (Method)	單位 (Unit)	MDL	結果 (Result) No.1	限值 (Limit)
一溴聯苯醚 (Monobromodiphenyl ether)	參考IEC 62321-6: 2015自訂方法，以氣相層析儀/質譜儀分析。(With reference to IEC 62321-6: 2015 in house method, analysis was performed by GC/MS.)	mg/kg	5	n.d.	-
二溴聯苯醚 (Dibromodiphenyl ether)		mg/kg	5	n.d.	-
三溴聯苯醚 (Tribromodiphenyl ether)		mg/kg	5	n.d.	-
四溴聯苯醚 (Tetrabromodiphenyl ether)		mg/kg	5	n.d.	-
五溴聯苯醚 (Pentabromodiphenyl ether)		mg/kg	5	n.d.	-
六溴聯苯醚 (Hexabromodiphenyl ether)		mg/kg	5	n.d.	-
七溴聯苯醚 (Heptabromodiphenyl ether)		mg/kg	5	n.d.	-
八溴聯苯醚 (Octabromodiphenyl ether)		mg/kg	5	n.d.	-
九溴聯苯醚 (Nonabromodiphenyl ether)		mg/kg	5	n.d.	-
十溴聯苯醚 (Decabromodiphenyl ether)		mg/kg	5	n.d.	-
多溴聯苯醚總和 (Sum of PBDEs)		mg/kg	-	n.d.	1000
鄰苯二甲酸二丁酯 (DBP) (Dibutyl phthalate (DBP))	依據IEC 62321-8: 2017，以氣相層析儀/質譜儀分析。(According to IEC 62321-8: 2017, analysis was performed by GC/MS.)	mg/kg	50	n.d.	1000
鄰苯二甲酸丁苯甲酯 (BBP) (Butyl benzyl phthalate (BBP))		mg/kg	50	n.d.	1000
鄰苯二甲酸二異丁酯 (DIBP) (Diisobutyl phthalate (DIBP))		mg/kg	50	n.d.	1000
鄰苯二甲酸二(2-乙基己基)酯 (DEHP) (Di-(2-ethylhexyl) phthalate (DEHP))		mg/kg	50	n.d.	1000

This document is issued by the Company subject to its General Conditions of Service printed overleaf, available on request or accessible at https://www.sgs.com.tw/terms-of-service and, for electronic format documents, subject to Terms and Conditions for Electronic Documents at https://www.sgs.com.tw/terms-of-service. Attention is drawn to the limitation of liability, indemnification and jurisdiction issues defined therein. Any holder of this document is advised that information contained hereon reflects the Company's findings at the time of its intervention only and within the limits of client's instruction, if any. The Company's sole responsibility is to its Client and this document does not exonerate parties to a transaction from exercising all their rights and obligations under the transaction documents. This document cannot be reproduced, except in full, without prior written approval of the Company. Any unauthorized alteration, forgery or falsification of the content or appearance of this document is unlawful and offenders may be prosecuted to the fullest extent of the law. Unless otherwise stated the results shown in this test report refer only to the sample(s) tested.

中國鋼鐵股份有限公司 (CHINA STEEL CORPORATION)
高雄市小港區中鋼路1號 (1 CHUNG KANG ROAD, HSIAO KANG, KAOHSIUNG 812401, TAIWAN, REPUBLIC OF CHINA)

備註(Note)：

1. mg/kg = ppm；0.1wt% = 0.1% = 1000ppm
2. MDL = Method Detection Limit (方法偵測極限值)
3. n.d. = Not Detected (未檢出)；小於MDL / Less than MDL
4. "-" = Not Regulated (無規格值)
5. (#2) =
   a. 當六價鉻結果大於0.13 μg/cm²，表示樣品表層含有六價鉻。(The sample is positive for Cr(VI) if the Cr(VI) concentration is greater than 0.13 μg/cm². The sample coating is considered to contain Cr(VI).)
   b. 當六價鉻結果為n.d. (濃度小於0.10 μg/cm²)，表示表層不含六價鉻。(The sample is negative for Cr(VI) if Cr(VI) is n.d. (concentration less than 0.10 μg/cm²). The coating is considered a non-Cr(VI) based coating)
   c. 當六價鉻結果介於 0.10 及 0.13 μg/cm² 時，無法確定塗層是否含有六價鉻。(The result between 0.10 μg/cm² and 0.13 μg/cm² is considered to be inconclusive - unavoidable coating variations may influence the determination.)
6. 除非另有說明，參照ILAC-G8:09/2019，採用簡單二元(w=0)允收規則進行符合性判定；根據此規則，符合性結果之判定係以測試結果與限值做比較。(Unless otherwise stated , the decision rule for conformity reporting is based on Binary Statement for Simple Acceptance Rule (w=0) stated in ILAC-G8:09/2019. According to this rule, the judgement of conformity is based on the comparing test results with limits.)
7. 申請人提交的產品是用於電機電子設備之原物料。(The product from the applicant submitted is a raw material which is used for electric and electronic equipment.)

This document is issued by the Company subject to its General Conditions of Service printed overleaf, available on request or accessible at https://www.sgs.com.tw/terms-of-service and, for electronic format documents, subject to Terms and Conditions for Electronic Documents at https://www.sgs.com.tw/terms-of-service. Attention is drawn to the limitation of liability, indemnification and jurisdiction issues defined therein. Any holder of this document is advised that information contained hereon reflects the Company's findings at the time of its intervention only and within the limits of client's instruction, if any. The Company's sole responsibility is to its Client and this document does not exonerate parties to a transaction from exercising all their rights and obligations under the transaction documents. This document cannot be reproduced, except in full, without prior written approval of the Company. Any unauthorized alteration, forgery or falsification of the content or appearance of this document is unlawful and offenders may be prosecuted to the fullest extent of the law. Unless otherwise stated the results shown in this test report refer only to the sample(s) tested.

中國鋼鐵股份有限公司 (CHINA STEEL CORPORATION)
高雄市小港區中鋼路1號 (1 CHUNG KANG ROAD, HSIAO KANG, KAOHSIUNG 812401, TAIWAN, REPUBLIC OF CHINA)

重金屬流程圖 / Analytical flow chart of Heavy Metal

根據以下的流程圖之條件，樣品已完全溶解。（六價鉻測試方法除外）
These samples were dissolved totally by pre-conditioning method according to below flow chart.
（Cr^{6+} test method excluded）

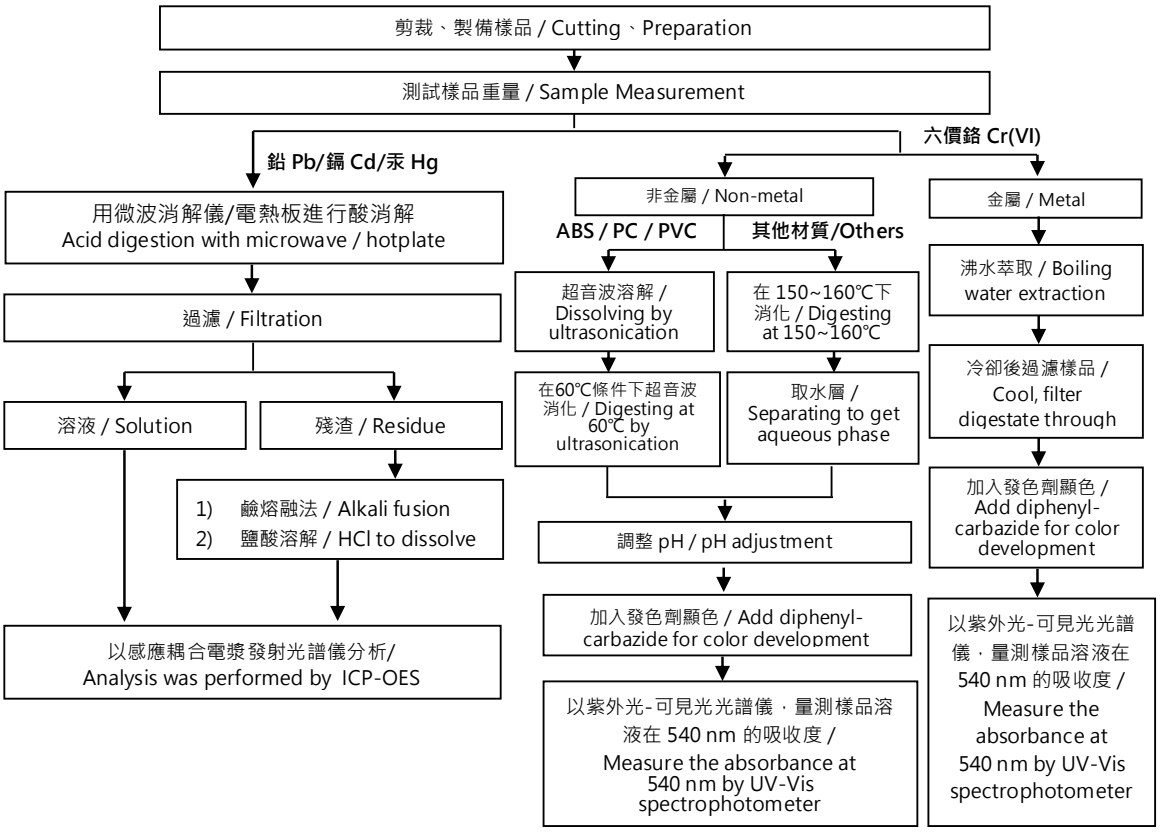

This document is issued by the Company subject to its General Conditions of Service printed overleaf, available on request or accessible at https://www.sgs.com.tw/terms-of-service and, for electronic format documents, subject to Terms and Conditions for Electronic Documents at https://www.sgs.com.tw/terms-of-service. Attention is drawn to the limitation of liability, indemnification and jurisdiction issues defined therein. Any holder of this document is advised that information contained hereon reflects the Company's findings at the time of its intervention only and within the limits of client's instruction, if any. The Company's sole responsibility is to its Client and this document does not exonerate parties to a transaction from exercising all their rights and obligations under the transaction documents. This document cannot be reproduced, except in full, without prior written approval of the Company. Any unauthorized alteration, forgery or falsification of the content or appearance of this document is unlawful and offenders may be prosecuted to the fullest extent of the law. Unless otherwise stated the results shown in this test report refer only to the sample(s) tested.

中國鋼鐵股份有限公司 (CHINA STEEL CORPORATION)
高雄市小港區中鋼路1號 (1 CHUNG KANG ROAD, HSIAO KANG, KAOHSIUNG 812401, TAIWAN, REPUBLIC OF CHINA)

多溴聯苯/多溴聯苯醚 分析流程圖 / PBB/PBDE analytical FLOW CHART

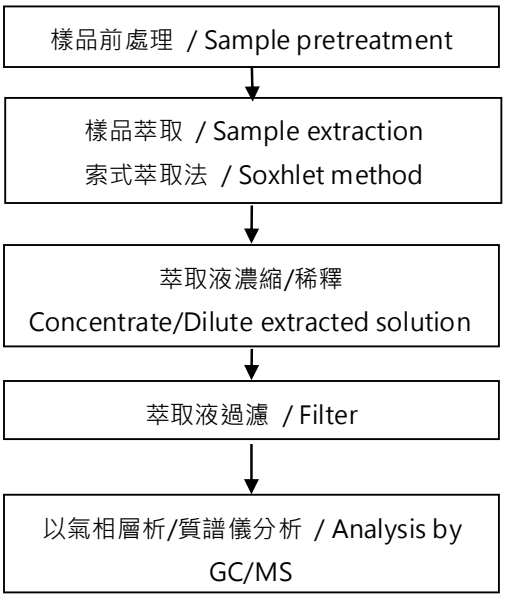

This document is issued by the Company subject to its General Conditions of Service printed overleaf, available on request or accessible at https://www.sgs.com.tw/terms-of-service and, for electronic format documents, subject to Terms and Conditions for Electronic Documents at https://www.sgs.com.tw/terms-of-service. Attention is drawn to the limitation of liability, indemnification and jurisdiction issues defined therein. Any holder of this document is advised that information contained hereon reflects the Company's findings at the time of its intervention only and within the limits of client's instruction, if any. The Company's sole responsibility is to its Client and this document does not exonerate parties to a transaction from exercising all their rights and obligations under the transaction documents. This document cannot be reproduced, except in full, without prior written approval of the Company. Any unauthorized alteration, forgery or falsification of the content or appearance of this document is unlawful and offenders may be prosecuted to the fullest extent of the law. Unless otherwise stated the results shown in this test report refer only to the sample(s) tested.

中國鋼鐵股份有限公司 (CHINA STEEL CORPORATION)
高雄市小港區中鋼路1號 (1 CHUNG KANG ROAD, HSIAO KANG, KAOHSIUNG 812401, TAIWAN, REPUBLIC OF CHINA)

可塑劑分析流程圖 / Analytical flow chart of phthalate content

【測試方法/Test method: IEC 62321-8】

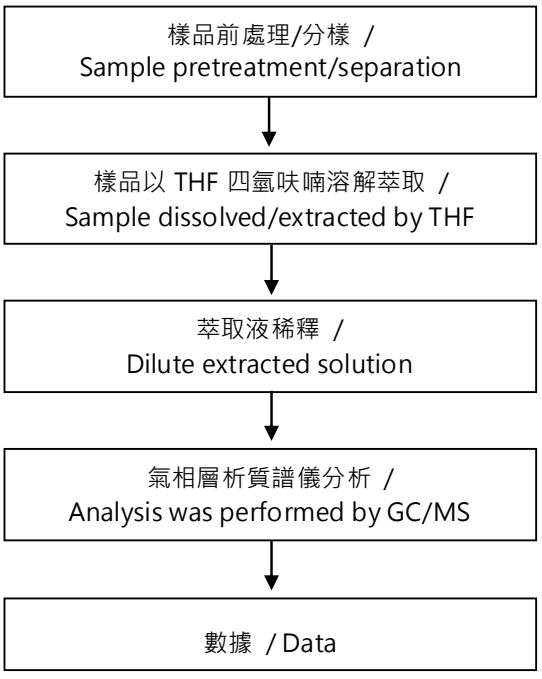

This document is issued by the Company subject to its General Conditions of Service printed overleaf, available on request or accessible at https://www.sgs.com.tw/terms-of-service and, for electronic format documents, subject to Terms and Conditions for Electronic Documents at https://www.sgs.com.tw/terms-of-service. Attention is drawn to the limitation of liability, indemnification and jurisdiction issues defined therein. Any holder of this document is advised that information contained hereon reflects the Company's findings at the time of its intervention only and within the limits of client's instruction, if any. The Company's sole responsibility is to its Client and this document does not exonerate parties to a transaction from exercising all their rights and obligations under the transaction documents. This document cannot be reproduced, except in full, without prior written approval of the Company. Any unauthorized alteration, forgery or falsification of the content or appearance of this document is unlawful and offenders may be prosecuted to the fullest extent of the law. Unless otherwise stated the results shown in this test report refer only to the sample(s) tested.

測試報告
Test Report

中國鋼鐵股份有限公司 (CHINA STEEL CORPORATION)
高雄市小港區中鋼路1號 (1 CHUNG KANG ROAD, HSIAO KANG, KAOHSIUNG 812401, TAIWAN, REPUBLIC OF CHINA)

*** 照片中如有箭頭標示，則表示為實際檢測之樣品/部位. ***
(The tested sample / part is marked by an arrow if it's shown on the photo.)

EKR23701425



** 報告結尾 (End of Report) **

This document is issued by the Company subject to its General Conditions of Service printed overleaf, available on request or accessible at https://www.sgs.com.tw/terms-of-service and, for electronic format documents, subject to Terms and Conditions for Electronic Documents at https://www.sgs.com.tw/terms-of-service. Attention is drawn to the limitation of liability, indemnification and jurisdiction issues defined therein. Any holder of this document is advised that information contained hereon reflects the Company's findings at the time of its intervention only and within the limits of client's instruction, if any. The Company's sole responsibility is to its Client and this document does not exonerate parties to a transaction from exercising all their rights and obligations under the transaction documents. This document cannot be reproduced, except in full, without prior written approval of the Company. Any unauthorized alteration, forgery or falsification of the content or appearance of this document is unlawful and offenders may be prosecuted to the fullest extent of the law. Unless otherwise stated the results shown in this test report refer only to the sample(s) tested.

安全資料表(SDS)

一、物品與廠商資料

物品名稱：線材、棒鋼、鋼板、熱軋鋼捲片、熱軋 P/O(Wire Rods，Steel Bars，Steel Plates，Hot-Rolled Steel Coils & Sheets & Plates、Hot-Rolled P/O)	
物品編號：	
製造商或供應商名稱、地址及電話：中國鋼鐵股份有限公司 812 高雄市小港區中鋼路 1 號	
緊急聯絡電話：(07)802-1111	傳真電話：(07)8039553

二、危害辨識資料

重要物理性及 化學性危害與效應	1.與強酸接觸會起反應產生可燃性氫氣。 2.銲接或加熱會產生氧化鐵燻煙。

三、成分辨識資料

純物質：

物品中（英）文名稱：鋼(STEEL)		
同義名稱：		
化學文摘社登記號碼(CAS.NO.)：鐵：07439-89-6		
危害物質成分(成分百分比)：鐵>96%		
危害物質成分之中（英）文名稱	濃度或濃度範圍(成分百分比)	危害物質分類及圖式
鐵(Fe)	>96%	

四、急救措施

不同暴露途徑之急救方法：

- 吸入：本產品形態食入之可能性相當低。
- 眼睛接觸：立即將眼皮撐開，用大量水沖洗 15 分鐘。本產品形態進入眼睛之可能性相當低。
- 皮膚接觸：立即用肥皂和水清洗，本產品形態造成刺激皮膚之可能性相當低。

五、滅火措施

適用滅火劑：使用適合週遭火災之滅火器。

滅火時可能遭遇之特殊危害：1.此物若以大塊型式存在時，不可燃。
2.若以微細粉末存在時，遇火源有引起爆炸的危險。
3.本產品若熔化或燃燒，則會產生毒性或刺激性蒸汽，請使用個人呼吸防護器具。

六、洩漏處理方法

本產品為固體狀不適用。

七、安全處置與儲存方法

一般使用：本產品邊緣為尖銳薄片或捲片，進行各項作業必須使用個人防護器具，所有員工必須接受訓練以安全地進行各項作業。

儲存建議：建議儲存於可防止實體破壞、濕氣、直接日曬之場所。

八、暴露預防措施

重要成分	化學文摘社登記號碼 CAS NO.	重量比例 (%)	暴露限制	
			OSHA PEL	ACGIH TLV
鐵 Iron	7439-89-6	96	未建立	未建立

工程控制：

1. 在進行燃燒、銅鑄、切割、研磨、打光、銲接或其他機械加工時，應使用機械通風裝置。
2. 若在進行機械加工時，有產生粉塵或微粒狀物質，建議採用局部及一般通風裝置以預防過多的危害物質暴露。

個人防護設備：

眼睛防護：在進行本產品作業時請穿戴化學安全護目鏡。

呼吸防護：如需符合暴露標準 在進行切割、研磨、打光或銲接等機械加工作業時，應使用自攜式呼

吸防護具。 皮膚防護：1.使用皮革或防割傷手套以免被尖銳薄片或捲片割傷。 2.使用防滲透手套以免被皮膚接觸表面油污。 身體防護：1.連身式防護衣。 2.工作鞋。 3.工作區要有淋浴/沖眼設備。
衛生措施： 1.工作場所嚴禁飲用、抽煙或飲食。 2.處理此物後，須徹底洗手。

九、物理及化學性質

物質狀態：固體	形狀：薄片或捲片
顏色：金屬性灰色	氣味：無味
pH 值：不適用	閃火點：不適用
熔解溫度：1535℃	
自燃溫度：不適用	爆炸界限：不適用
密度：7.5 – 8.0（水＝1）	溶解度：不溶於水
熔點/凝固點：不適用	揮發速率：不適用
易燃性(固態、氣態）：不適用	分配係數(正辛醇/水）：不適用

十、安定性及反應性

安定性：正常狀況下安定
應避免之狀況：濕氣及腐蝕性物質會氧化本物質
應避免之物質：酸類、A 類及 B 類爆炸物、強性氧化物、腐蝕劑
危害分解物：引燃或熔解可能會產生有產生毒性或刺激性蒸汽

十一、毒性資料

急毒性(Acute Effects)：

鐵(Iron) LD50(測試動物暴露途徑)：30 g/kg(大鼠，吞食)

過度暴露效應(Symptoms of Overexposure)：

鐵**(Iron Oxide)**：過度暴露或重覆暴露於高濃度狀況下，可能造成塵肺病 pneumoconiosis，吸入氧化鐵可能會刺激眼睛、鼻子及喉嚨。

矽**(Silicon):** 主要為厭惡性粉塵(Nuisance Dust)，可能會刺激眼睛及黏液薄膜(Mucous Membranes)，本產品型態無此危害。

十二、生態資料

現有資料無影響生態之考量

十三、廢棄處置方法

廢棄處置方法：1.參考相關法規處理。
2.相關法規可能會限制金屬性廢棄物之處置。
3.建議採取回收金屬性廢棄物。

十四、運送資料

無特殊運送方法

十五、法規資料

適用法規：
職業安全衛生設施規則
危害性化學品標識及通識規則
勞工作業環境空氣中有害物容許濃度標準
事業廢棄物貯存清除處理方法及設施標準

安全資料表(SDS)

十六、其他資料

參考文獻		
製表者單位	名稱：中國鋼鐵股份有限公司	
	地址/電話：812 高雄市小港區中鋼路 1 號，Tel：(07)8021111	
製 表 人	職稱：工 程 師	姓名（簽章）：胡哲源
製表日期	2020.01.07	
備　　註	1. 本安全資料表僅供參考，中國鋼鐵股份有限公司對使用本資料不承擔任何法律責任或提供任何保證。 2. 本安全資料表之提供是基於對本產品的安全及健康危害相關資訊之最佳瞭解，以安全地進行本產品之各項作業及處理。 3. 每位進行本產品之各項作業及處理之人員應先閱讀本安全資料表，瞭解如何進行本產品之各項作業及處理；也應考量本產品與其他製造廠商產品可能之應用。	