H. N. S.

浜 中 松 琴 工 業 有 限 公 司

HAMA NAKA SHOUKIN INDUSTRY CO., LTD.

MECHANICAL PROPERTIES LABORATORY

TEST REPORT

Test Report No. : N2014.11.24-02

Issued Date : 2014.11.24

Name of Client :Yin Pon Yen

Address of Client :No.205, Fu Ying Rd., Hsin Chung City, Taipei Hsien, Taiwan

Manufacture :HAMA NAKA SHOUKIN INDUSTRY CO., LTD.

Address of Manufacture :No.205, Fu Ying Rd., Hsin Chung City, Taipei Hsien, Taiwan

Commodity and Size :Thread Rolling Screw **PH+SW+WM3-0.5x6 W=6 T=0.5 耐落**

Fastener specification:part number **8F.1H554.6R0**

Maunfacturing Dat 2014.11.24

Lot No.: N2014.11.24-02

Lot Size : —

Sampling Size : 10 pcs

Material Type : AISI-1018

Head Marking : N/A

Coating : Nickel

Job Order No.: N/A

Dimensional Inspection Specification :

Sampled by : Candy

Characteristics	Specified	unit	Actual Result	Acc.	Rej.
Head Dia.(dk)	5~5.5	mm	5.25~5.37	10	0
Major Dia.(d)	2.88~2.98	mm	2.90~2.91	10	0
Length.(l)	5.4~6	mm	5.66~5.75	10	0
Head height.(k)	1.85~2.15	mm	2.02~2.03	10	0
Washer Head Dia.(D1)	5.7~6	mm	5.85~5.88	10	0
Washer Thickness.(T)	0.4~0.6	mm	0.49~0.50	10	0
Cross.(m)	2# P-GAGE	—	PASSED	10	0

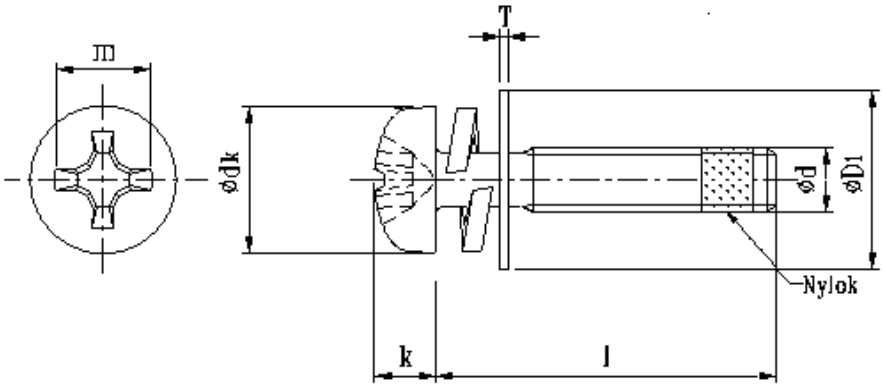

INSPECTION RESULT :Samples tested conform to all of the specification as above

Remark :

* Total samples size = Acc. + Rej.
* The report is responsible for designated samples and test item only.
* The report must not be reproduced except in full.
* The chemical analysis of material is carried out by csc(FQA accredited)in accordance with test method ASTM E415 and E1019 which conform to metal standards and specifications

Report Signatory : 張哲文

Inspector : 黃詩婷

NO. 205, FU YING RD., HSIN-CHUANG CITY, TAIPEI
HSIEN, TAIWAN. 242
REPUBLIC OF CHINA
TEL : 886-2-2903-8886 , 2902-6532
FAX: 886-2-29026741

HNS

A2LA Certificate No. 1209-01