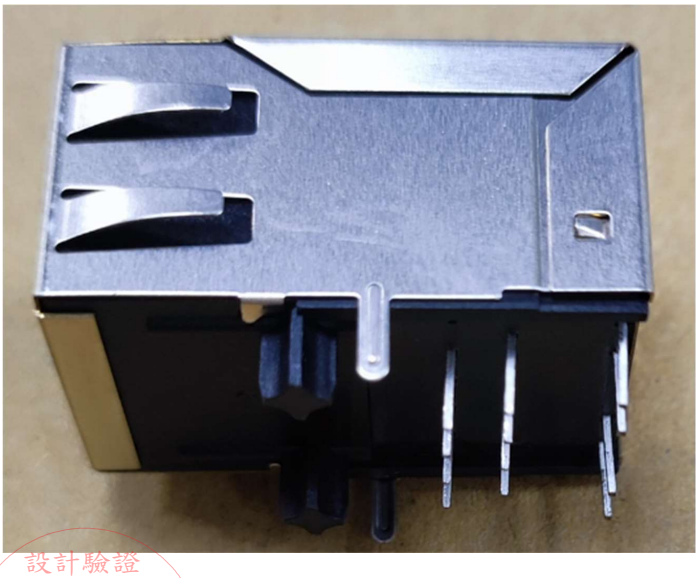



設計驗證
工程課
2023.09.22
發行



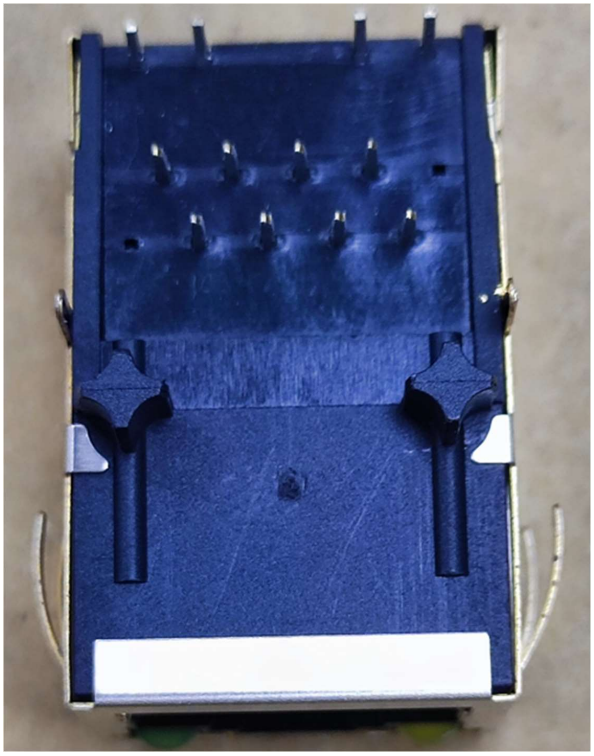

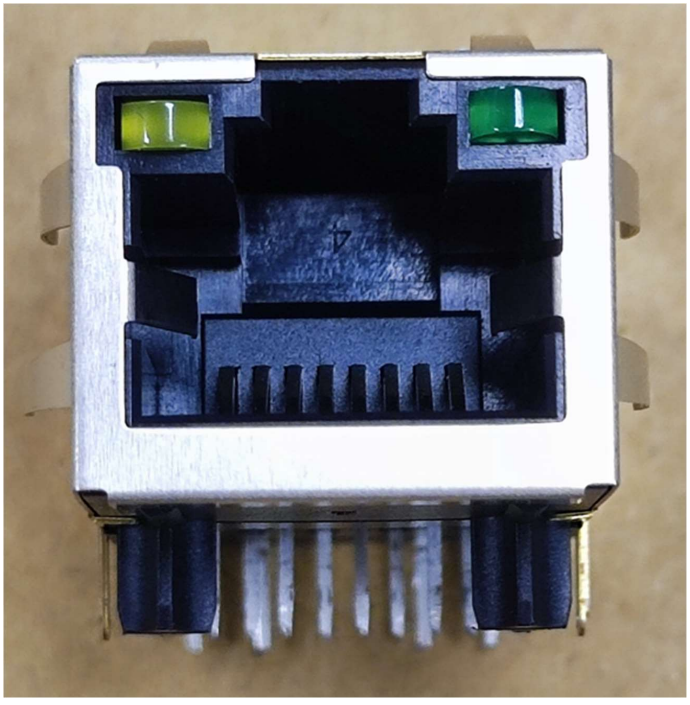

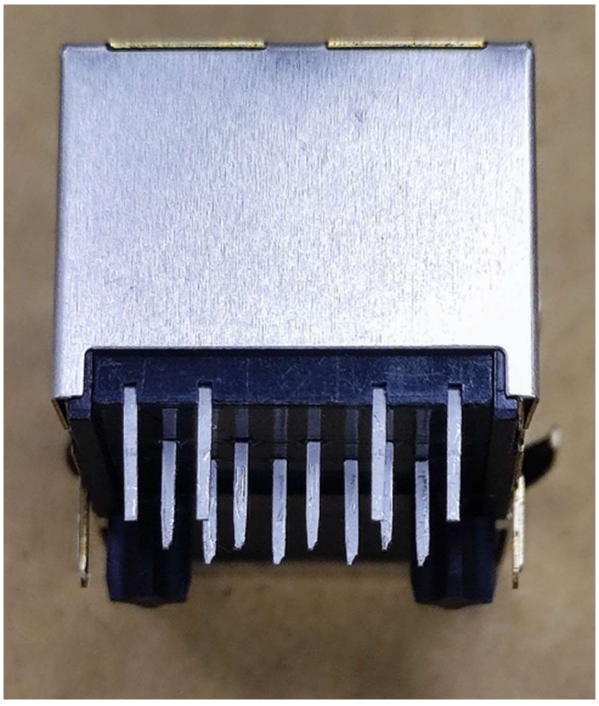

Customer 客戶名稱：

No 序列號:

Attention 聯繫人： Sunny

Approval Date 承認日期:

設計驗證 工程課 2023.09.22 發行

Your Part No 客戶料號：TY.2BD10.001 3FF01215610

Sample No 樣品號.：(F0290)

SPECIFICATION

規 格 說 明 書

Model 型號：

Spec No 規格： CS22H-L059

Customer Approval Status 客戶承認狀況	HUATAC File Publish Sign 華傑文件發行蓋章處
Dsg'd 設計:	Edition 版本： A
Chk'd 審核:	
App'd 批准:	
File Publish Sign 文件發行蓋章處	File clerk 文管:

HUA JIE (TAIWAN) CORP.

臺灣華傑股份有限公司

6F,NO.25,JI-LIN ROAD.CHUNG LI.

TAIWAN (CHUNGLI INDUSTRILA ZONE)

臺灣中壢工業開發區吉林路 25 號 6 樓

SUZHOU HUAJIE ELECTRONICS CO.LTD

蘇州華傑電子有限公司

NO.9.XingYe Road Huangqiao

Town Suzhou.China

中國江蘇省蘇州市黃橋鎮兴业路 9 号

技术部 23.03.18 卢红

Dsg'd 設計

技术部 23.03.18 杨勇

App'd 批准

Sales 業務員

SPECIFICATION FOR APPROVAL

3. Revision Change Record

Customer Part No.: Part No.: CS22H-L059 Part Name: RJ45 ICM (10/100 Base-T 1 Port)	Rev.: A ROHS

Rev	Description	Drawn	Designed	Approved	Issue Date
A	New Release	Xu Pin Gui	/	Hu Xiang	

SPECIFICATION FOR APPROVAL

Customer Part No.: - Part No.: CS22H-L059 - Part Name: RJ45 ICM (10/100 Base-T 1 Port)	Rev.: A ROHS

4. Mechanical Dimension and Notes:

4-1. Mechanical Dimension:

Unless otherwise specified,all dimensions tolerances is ±0.254 / 0.010.

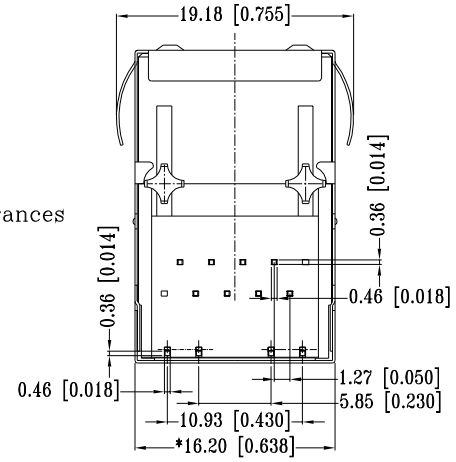

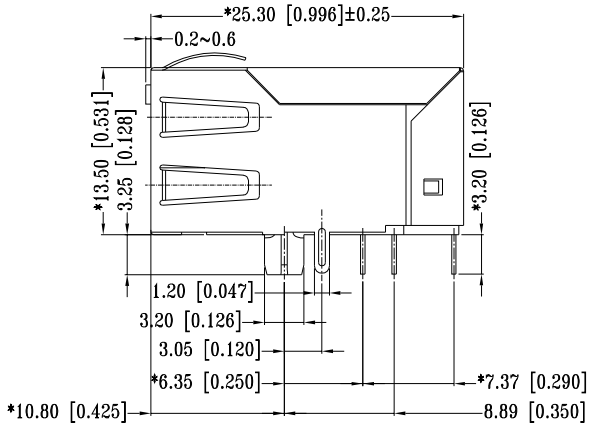

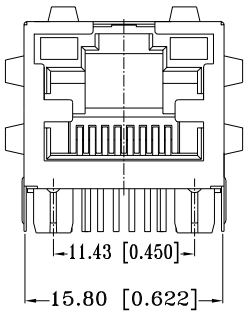

設計驗證
工程課
2023.09.22
發行
鈺緯科技開發股份有限公司

4-2. Notes:

1.CONNECTOR MATERIAL:
  HOUISING:PA66 BLACK UL94 V-0
  INSERTER:PA66 BLACK UL94 V-0
  SHIELD:Brass
  SHIELD PLATING:NICKEL
  CONTACT:COPPER ALLOY
  CONTACT PLATING:SELECTIVE GOLD,6 MICRO-INCHS MIN IN CONTACT AREA
2.PIN NOT ELECTRICALLY CONNECTED MAYBE OMITTED SEE ELECTRICAL DRAWING FOR OMITTED PINS
3.RJ45 CAVITIES CONFORM TO FCC RULES AND REGULATION PART 68.
4.THE PART IS RECOMMENDDED FOR WAVE SOLDERING PROCESS PEAK SOLDERING TEMPERATURE IS 260° C MAX,10 SECS MAX
5.OPERATING TEMPERATURE T=-40° C TO +85° C.
6.STORAGE TEMPERATURE T=-40° C TO +85° C.
7.All CRITICAL DIMENSIONS WITH "*"

LED SPECIFICATION

STANDARD LED	WAVELENGTH	Forward V(max)	TYP
GREEN	565nm	2.4V	2.2V
YELLOW	590nm	2.5V	2.1V

*WITH A FORWARD CURRENT OF 20mA

Drawn by	Designed by	Approved by

SPECIFICATION FOR APPROVAL

Customer Part No.: - Part No.:CS22H-L059 Part Name: RJ45 ICM (10/100 Base-T 1 Port)	Rev.: A ROHS

5. Label and Recommended PWB Layout and Suggested Panel Opening:
5-1. Suggested Panel Opening:

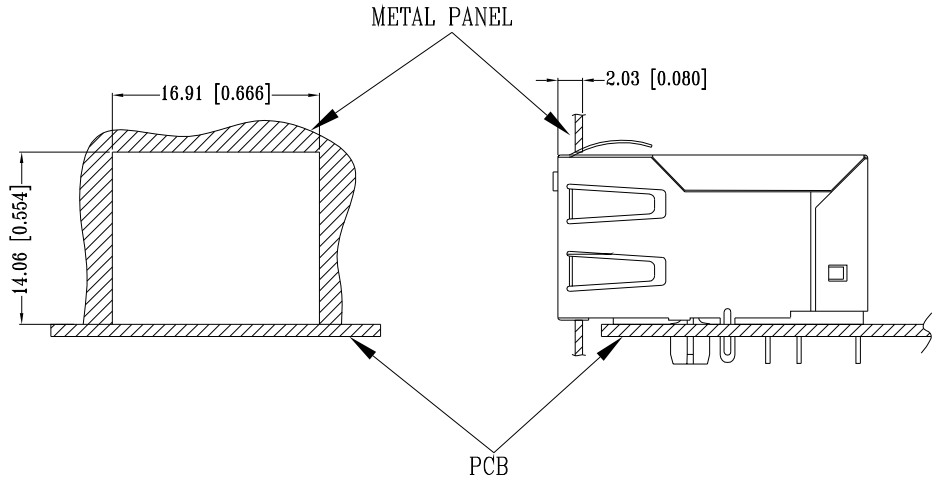

UNIT: mm / inch
Tolerances: ±0.10 / 0.004

REFERENCE ONLY

SPECIFICATION FOR APPROVAL

Customer Part No.: - Part No.: CS22H-L059 - Part Name: RJ45 ICM (10/100 Base-T 1 Port)	Rev.: A ROHS

5-2. Keep-Out Area (Component Side View):

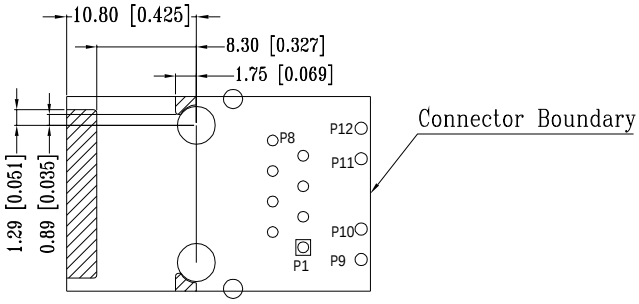

UNIT: mm / inch
Tolerances: ±0.10 / 0.004

5-3. Recommended PWB Layout (Component Side View):

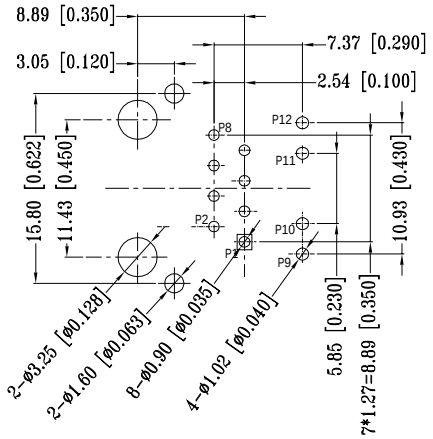

UNIT: mm / inch
Tolerances: ±0.10 / 0.004

SPECIFICATION FOR APPROVAL

Customer Part No.: - Part No.CS22H-L059 - Part Name: RJ45 ICM (10/100 Base-T 1 Port)	Rev.: A ROHS

6. Circuit Schematic and Electronical Specifications:

6-1. Circuit Schematic:

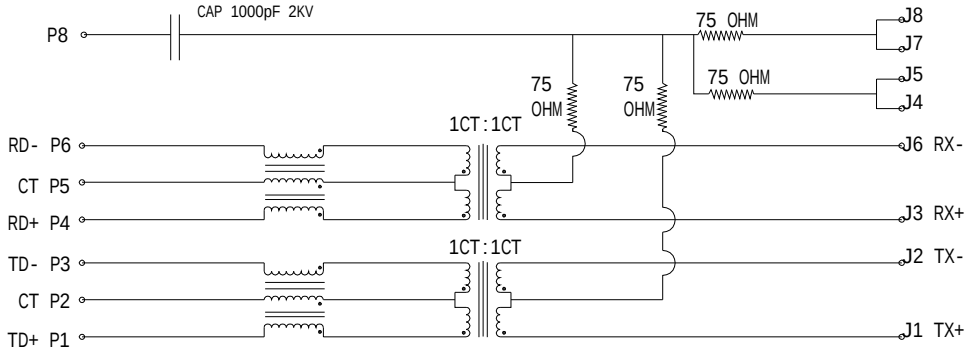

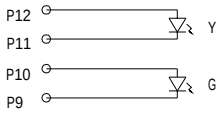

Pin	Green		Yellow
P9	-	P11	-
P10	+	P12	+

6-2. Electronical Specifications:

1.0 Turn Ratio @100KHz: (P1~P3):(J1~J2) = 1:1±5%
(P4~P6):(J3~J6) = 1:1±5%

2.0 Primary Inductance: 350uH MIN @100KHZ,0.1V 8mA DC BIAS

3.0 DC Resistance:(J1~J2):(J3~J6) 1.2 OHMS MAX

4.0 Insertion Loss: 1-100MHz -1.2dB MAX

5.0 Return Loss: 1-30MHz -16dB MIN
30-60MHz -12dB MIN
60-80MHz -10dB MIN

6.0 CROSS TALK: 1-100MHz -30dB MIN

7.0 COMMON TO COMMON MODE ATTENUATION: 1-100MHz -30dB MIN

8.0 Isolation: PHY Side to Line Side: 1500VAC or 2250VDC