

設計驗證
工程課
2023.10.03
發行
鈺鑽科技開發股份有限公司

協 利
SHERRY

承認書
SPECIFICATIONS FOR APPROVAL

客戶名稱: Customer	鈺緯科技開發股份有限公司

客戶品名 : Customer No — SIDE BRACKET

料 號: Products No — 3MD001ME340 (M3456) Rev : 0.0

規 格: Description — SIDE BRACKET

協利程式碼: — 12-05037

送認日期: App. Date — 3-Oct-23

globalgroup ISO 9001 UKAS MANAGEMENT SYSTEMS 5965
78Q16232

Comments:

客戶確認簽章: Signature

設計驗證 工程課 2023.10.03 發行 鈺緯科技開發股份有限公司

日期 Date:

Please return one copy with the authorization signature. Thanks you!

Notes：※本樣品承認書E-MAIL呈貴司承認，請貴司審查、確認合格後，並加蓋貴司承認章並E-MAIL回傳（送）回敝司業務部。

若七日內未簽回，視為默認，敝司將以此規格對貴司之訂單交貨。

協利雷射工業股份有限公司 工程專用章

Approve by	Checked by	Designed by	協利雷射工業股份有限公司
謝正宏	陳家豪	林軼凡	Fax:(02)2685-1177 Tel: (02)2685-1133 mail: s5662@sherry-laser.com.tw 統一編號：22952592

地址:新北市樹林區中正路253巷6號

REV.	DATE	DESCRIPTION	BY	APVD

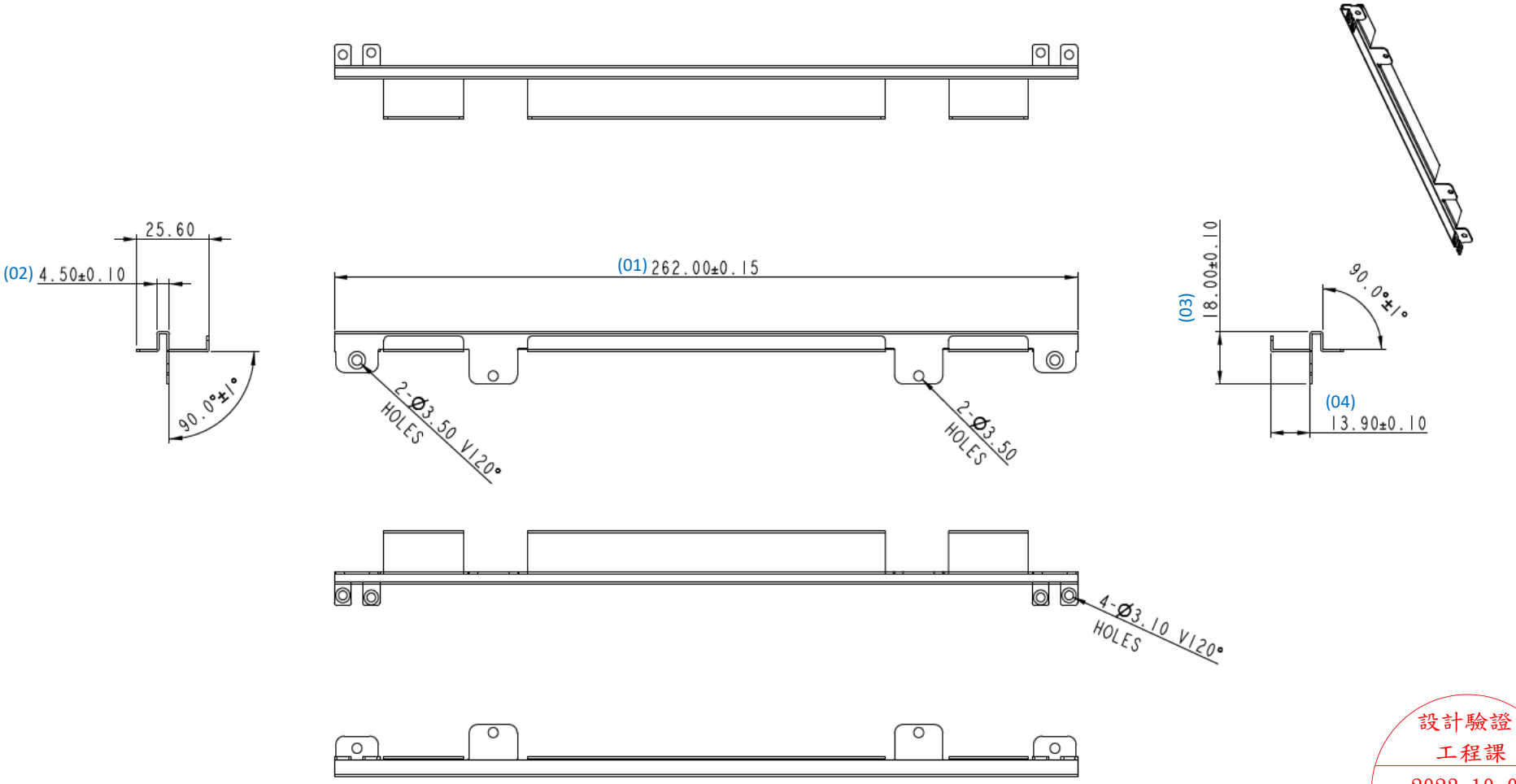

設計驗證
工程課
2023.10.03
發行
鈺鐘科技開發股份有限公司

NOTES:
1. MATERIAL: SECC, t=0.81mm.
2. ALL FLAT HEAD SCREWS(110°) MUST SINK COMPLETELY DO NOT OUTCROP.
3. IQC INSPECTION DOCUMEMNT NO.: QWI-014.

RANGE OF DIMENSION	TOLERANCE CLASS DESIGNATION f	V m	c	THIRD ANGLE PROJECTION		UNITS: mm	SCALE: 1/1	SHEET: 1 OF 1	MODEL NO.: LCRA21EAGCXBPU (M)
						MATERIAL: SECC, t=0.81		TREATMENT:	
UP TO 30	±0.10	±0.20	±0.50	DSGD by	Ferris. Tsai	2023-10-02	PART NAME:	SIDE BRACKET	
ABOVE 30~120	±0.15	±0.30	±0.80	CHK by					
ABOVE 120~315	±0.20	±0.50	±1.20	APVD by	Laglie	2023-10-02	PART NO.:	3MD001ME340	REV. 0
ABOVE 315~1000	±0.30	±0.80	±2.00	APVD No.:		3D FILE NAME:	DIVA Laboratories ,Ltd.		
ANGLE ±1° (±1.75/100)				M3456		SIDE_BRACKET_LCRA21EAGCXBPU_M			

Reject= 0

FAI DATA SHEET

Drawing Number:	3MD001ME340 (M3456)	Supplier :	協利雷射工業股份有限公司	Date: **2023/6/5**
Part Description:	SIDE BRACKET	Submission No :		Cavity / Tool # :
Revision:	REV.0	Material Spec :	**SECC T=0.8mm**	Inspector: 林軼凡

New:
Revised:
Resubmission:

DRAWING SPECIFICATIONS					INSPECTION RESULTS							INSPECTION ANALYSIS						
					Sample Number			Deviation from Nominal				% Tolerance		Acc/Rej		Inspection	**Supplier**	Engineering
ITEM	LOCATION	NOMINAL	+TOL	-TOL	1	2	3	1	2	3	Mean	UPPER	LOWER	HIGH	LOW	Method	**Remarks**	Disposition
1		262.00	0.50	0.50	262.03	262.04	262.05	***0.03***	***0.04***	***0.05***	***262.04***	**10%**	**0%**					
2		18.00	0.20	0.20	18.02	18.03	18.03	***0.02***	***0.03***	***0.03***	***18.03***	**15%**	**0%**					
3		25.60	0.30	0.30	25.64	25.63	25.62	***0.04***	***0.03***	***0.02***	***25.63***	**13%**	**0%**					
4																		
5																		
6																		
7																		
8																		
9																		
10																		
11																		
12																		
13																		
14																		
15																		
16																		
17																		
18																		
19																		
20																		
21																		
22																		
23																		
24																		
25																		

品質證明書
TEST CERTIFICATE

中國鋼鐵股份有限公司
CHINA STEEL CORPORATION
中華民國高雄市小港區中鋼路1號
1 CHUNG KANG ROAD HSIAO KANG, KAOHSIUNG 81223
TAIWAN, REPUBLIC OF CHINA
TEL:(07)802-1111 FAX:(07)802-2511, (07)801-9427
E-mail: t211mac@mail.csc.com.tw

F0052-01 COMPANY REGISTRATION NUMBER: 30414175 0253

客戶名稱 CUSTOMER	上鋼股份有限公司 SPECIAL STEEL CO., LTD.			產品名稱 PRODUCT	EG SHEET-COIL
				發票號碼 INVOICE NO.	AH69833517
				證明書編號 CERTIFICATE NO.	110521F0052
規格名稱 SPEC.	CSC SECC1-SD, ZINC COATING MASS: ZZ20/ZZ20 (20/20 G/M2), CHROMATE-FREE ANTI-FINGER PRINT TREATED (A/A), UNOILED. R-36			客戶編號 CUSTOMER NO.	20971926
				中鋼訂單編號 CSC ORDER NO.	JC1137D
				交運日期 SHIPPING DATE	MAY. 20, 2022
				證明書日期 T/C ISSUE DATE	MAY. 21, 2022
檢驗 INSP.	CSC MILL INSPECTION.	T/C	01	客戶訂單編號 CUST ORDER NO.	

項目 ITEM NO.	產品序號 LABEL NO.	尺寸 DIMENSIONS 厚度 THICK. mm	寬度 WIDTH mm	長度 LENGTH mm	數量 QTY	質量 MASS kg	爐號 HEAT	鋼捲號碼 COIL NO.	試片編號 SAMPLE ID.	拉伸試驗 *1 G.L. = 50 mm 降伏 Y.S. MPa, N/mm2	抗拉 T.S.	伸長 EL %	*02 彎曲試驗	*05 硬度 RB	*12 單點上 g/m2	*13 單點下 g/m2	化學成分 CHEMICAL COMPOSITION % C 2 X10	Mn 2 X10	P 3 X10	S 3 X10	Si Cu Ni 2 X10	Cr	Al 3 X10	備註 REMARK
001	E784662	0.500	1219	COIL	1	9,505	5NN04	57432172	5743217	249	345	43.0	OK	48	20.0	19.3	2	17	11	3	Tr		37	
002	E785043	0.800	"	COIL	1	11,130	5NP19	57441082	5744108	231	334	45.0	OK	50	20.4	20.2	2	12	14	3	1		43	
	E785044				1	10,995	6V435	50408311	5040831	218	331	45.0	OK	48	20.4	20.3	2	15	14	3	1		38	
003	EK18780	0.980	1219	COIL	1	8,710	5NP59	57446402	5744640	210	326	47.0	OK	47	21.0	19.6	2	15	11	4	Tr		36	
	E785087	"	"	"	1	9,420	5NP59	57447181	5744718	210	322	48.0	OK	45	21.3	19.9	"	"	"	"	"		"	
	E785088	"	"	"	1	9,420	5NP59	57447182	5744718	210	322	48.0	OK	45	21.3	19.9	"	"	"	"	"		"	
	E785091	"	"	"	1	9,710	5NP92	57450191	5745019	227	335	45.0	OK	49	21.3	19.9	2	14	19	5	1		37	
	E785092	"	"	"	1	11,160	5NP92	57450192	5745019	227	335	45.0	OK	49	21.3	19.9	"	"	"	"	"		"	
	E785095	"	"	"	1	11,430	5NP59	57446401	5744640	210	326	47.0	OK	47	21.0	19.6	2	15	11	4	Tr		36	
	E785098	"	"	"	1	11,245	5NP92	57450181	5745018	220	332	47.0	OK	49	20.8	19.3	2	14	19	5	1		37	
	E785099	"	"	"	1	11,245	5NP92	57450182	5745018	220	332	47.0	OK	49	20.8	19.3	"	"	"	"	"		"	
	E785100	"	"	"	1	11,215	5NP92	57450201	5745020	225	336	46.0	OK	50	21.2	19.6	"	"	"	"	"		"	
	E785101	"	"	"	1	11,205	5NP92	57450202	5745020	225	336	46.0	OK	50	21.2	19.6	"	"	"	"	"		"	
004	E785286	1.180	1219	COIL	1	10,895	5NQ76	57454602	5745460	224	332	43.0	OK	51	20.5	19.7	2	16	14	5	Tr		42	
	E785293	"	"	"	1	10,395	5NQ76	57454562	5745456	222	330	44.0	OK	50	20.1	19.2	"	"	"	"	"		"	
008	E784835	1.980	1219	COIL	1	10,165	LW255	33556522	3355652	196	314	47.0	OK	48	19.3	20.0	2	19	10	3	Tr		34	
	E784878	"	"	"	1	10,725	NG660	36383781	3638378	205	323	49.0	OK	51	18.9	19.4	2	19	15	4	Tr		33	
			TOTAL:		17	178,570																		

註釋 NOTES

*01 拉伸試驗 TENSILE TEST
*02 彎曲試驗 BEND TEST
*05 硬度試驗 HARDNESS TEST
*12 上表面鍍鋅量 UPPER COAT(SINGLE)
*13 下表面鍍鋅量 LOWER COAT(SINGLE)

1MPa = 1N/mm2
Al =TOTAL Al

Tr:TRACE ELEMENT WITH ITS CONTENT CONFORMING TO THE SPECIFICATION REQUIREMENTS.

SURVEYED BY

茲證明本表所列產品，均依材料規格製造及試驗，並符合規格之要求。
WE HEREBY CERTIFY THAT MATERIAL DESCRIBED HEREIN HAS BEEN MANUFACTURED AND TESTED WITH SATISFACTORY RESULTS IN ACCORDANCE WITH THE REQUIREMENT OF THE ABOVE MATERIAL SPECIFICATION.

Shon-chin Huang
冶金技術處處長
GENERAL MANAGER, METALLURGICAL DEPARTMENT