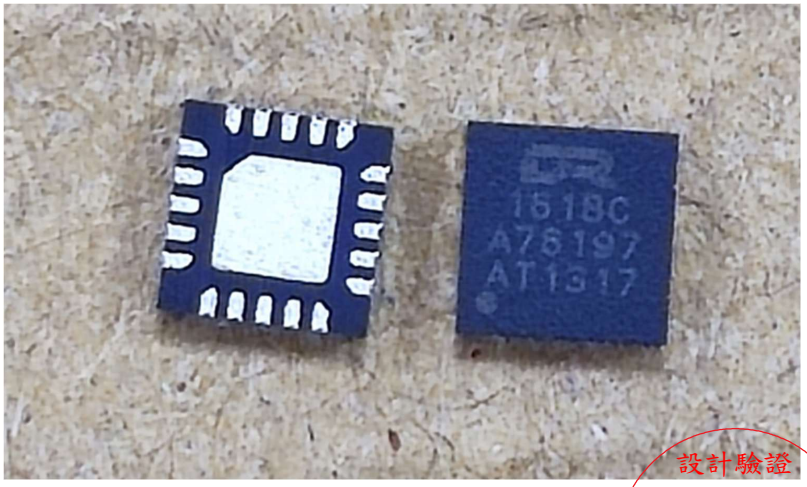

設計驗證
工程課
2023.12.12
發行
鈺創科技開發股份有限公司

承　　認　　書

品　　名：DR1618CQC

規　　格：USB TYPE-C® PORT PROTECTOR

SHORT-TO-VBUS OVERVOLTAGE AND IEC ESD PROTECTION

製造廠商：DERUN MICROELECTRONICS

客　　戶：DIVA Laboratories. Ltd.

客戶料號：3ADR1618C1Y(A0542)

適用機種：

送樣日期：2023-12-12

備　　註：物料說明：IC (DR1618_QFN21,DERUN)

客戶承認：

設計驗證
工程課
2023.12.12
發行
鈺鑫科技開發股份有限公司

主　管	經　辦

豐藝電子股份有限公司

Promate Electronic Co., Ltd

4f, 32, Sec. 1, Huan Shan RD., Nei Hu, 104, Taipei, Taiwan.

Tel: 886-2-2659-0303　　FAX: 886-2-2658-0988

PREPARED BY : **Lange Chen**

DR1618C: USB TYPE-C® PORT PROTECTOR

SHORT-TO-VBUS OVERVOLTAGE AND IEC ESD PROTECTION

Confidential for DIVA Laboratories, Ltd.

General Description

DR1618C provides an integrated single-chip protection solution for USB Type-C® connector. The solution of DR1618C includes Short-to-VBUS voltage protection for 4 channels, and a plus on 6 channels ESD protection.

USB Type-C® connector is well-known as a new generation USB interface. It enables flip-ability, and adapts to various advanced application ranging from USB 3.2, USB4, DisplayPort, Thunderbolt, up to 140W USB Power Delivery, and other Quick Charge specification.

With multiply pin assignments merged in a tiny USB Type-C® connector, each pin is closed to each other. Given any of the slightly slip connection or humidity, it will result the short in VBUS, CC line, and SBU. Once the VBUS voltage exceeds 5V, it possesses highly potential to destroy CC and SBU pin on the connector, which leads the malfunction on the product. Therefore, it is important to follow the USB Power Delivery specification in having VBUS voltage tolerance to 28V so as to prevent shorting issue.

DR1618C features to work as standalone IC and will not interfere any of product functionality. Over-voltage protection will be triggered when the voltage exceeds 5V. However, with DR1618C, it will serve as a protection IC to mitigate the over-voltage situation. In addition to the voltage protection function, DR1618C is integrated with IEC 61000-4-2 ESD protection on CC1, CC2, SBU1, SBU2, D1, D2 so as to avoid using additional TVS diodes on the circuit.

Features

- 4-Channels of SHORT-TO-VBUS Overvoltage Protections (CC1, CC2, SBU1, SBU2): 28VDC Tolerance
- IEC 61000-4-2 ESD Protection: CC1, CC2, SBU1, SBU2, D1, D2 pins
  Contact discharge: 8KV
  Air discharge: 15KV
- IEC 61000-4-5 ±35V Surge Protection: CC1, CC2, SBU1, SBU2 pins
- CC1/CC2 Dead Battery resistors integrated
- Fast OVP Turnoff Time: 60ns
- CC1/CC2 600mA capable for passing VCONN power supply.
- 3mm×3mm QFN-20L Package

Applications

- Notebooks/Laptop PC
- Tablets
- Monitors & TVs
- Docking Stations & Dongles
- Video Conference Systems
- Gaming Headsets
- Surveillance Cam

TABLE OF CONTENTS

GENERAL DESCRIPTION 1

FEATURES 1

APPLICATIONS 1

1. PIN CONFIGURATION 3

2. SIMPLIFIED APPLICATION CIRCUIT 3

3. PIN DESCRIPTION 4

4. BLOCK DIAGRAM 5

5. FUNCTIONAL DESCRIPTION 5

(1) HV SWITCHES FOR CC/SBU CHANNELS 5

(2) HIGH VOLTAGE PROTECTION 5

(3) DEAD BATTERY MODE 6

(4) ESD PROTECTION 6

6. ABSOLUTE MAXIMUM RATINGS 6

7. ESD RATINGS 7

8. RECOMMENDED OPERATING CONDITIONS 7

9. ELECTRICAL CHARACTERISTICS 7

10. TYPICAL OPERATING CHARACTERISTICS 10

11. TYPICAL APPLICATION CIRCUIT 10

12. APPLICATION INFORMATION 11

13. PACKAGE OUTLINE 13

14. ORDERING INFORMATION 13

15. REVISION HISTORY 14

Confidential for DiVA Laboratories, Ltd.

COPYRIGHT © 2021, HONGKONG DERUN MICROELECTRONICS COMPANY LIMITED

1. Pin Configuration

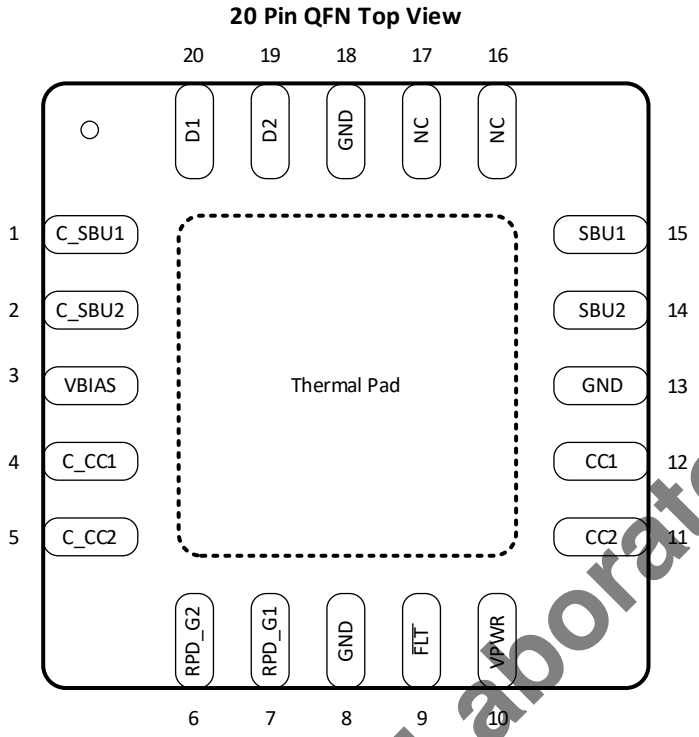

2. Simplified Application Circuit

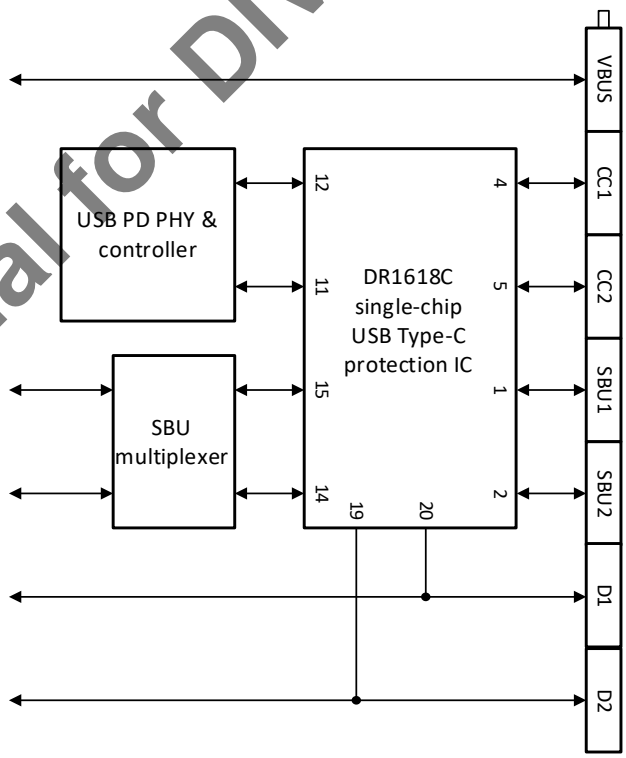

Confidential for DIVA Laboratories, Ltd.

COPYRIGHT © 2021, HONGKONG DERUN MICROELECTRONICS COMPANY LIMITED

3. Pin Description

Pin No.	Pin Name	Type	Description
1	C_SBU1	I/O	Connector side of SBU1 OVP switch
2	C_SBU2	I/O	Connector side of SBU2 OVP switch
3	VBIAS	P	Place a 0.1uF capacitor on this pin to ground for ESD protection
4	C_CC1	I/O	Connector side of CC1 OVP switch
5	C_CC2	I/O	Connector side of CC2 OVP switch
6	RPD_G2	I/O	Connect to C_CC2 if dead battery resistors are needed. If dead battery resistors are not needed, connect pin to GND.
7	RPD_G1	I/O	Connect to C_CC1 if dead battery resistors are needed. If dead battery resistors are not needed, connect pin to GND.
8	GND	P	Ground pin. Connect to the system ground
9	/FLT	O	Fault flag. It goes low when protection is triggered
10	VPWR	P	Power supply input pin
11	CC2	I/O	Device side of CC2 OVP switch
12	CC1	I/O	Device side of CC1 OVP switch
13	GND	P	Ground pin. Connect to the system ground
14	SBU2	I/O	Device side of SBU2 OVP switch
15	SBU1	I/O	Device side of SBU1 OVP switch
16	NC	-	Unused pin. Connect to Ground or be floating
17	NC	-	Unused pin. Connect to Ground or be floating
18	GND	P	Ground pin. Connect to the system ground
19	D2	I/O	ESD protection circuit, connect to DP or DM pin
20	D1	I/O	ESD protection circuit, connect to DP or DM pin
-	E-PAD	P	Thermal pad and connected with chip ground. Must be connected to system ground plane on PCB.

Confidential for DIVA Laboratories, Ltd.

COPYRIGHT © 2021, HONGKONG DERUN MICROELECTRONICS COMPANY LIMITED

4. Block Diagram

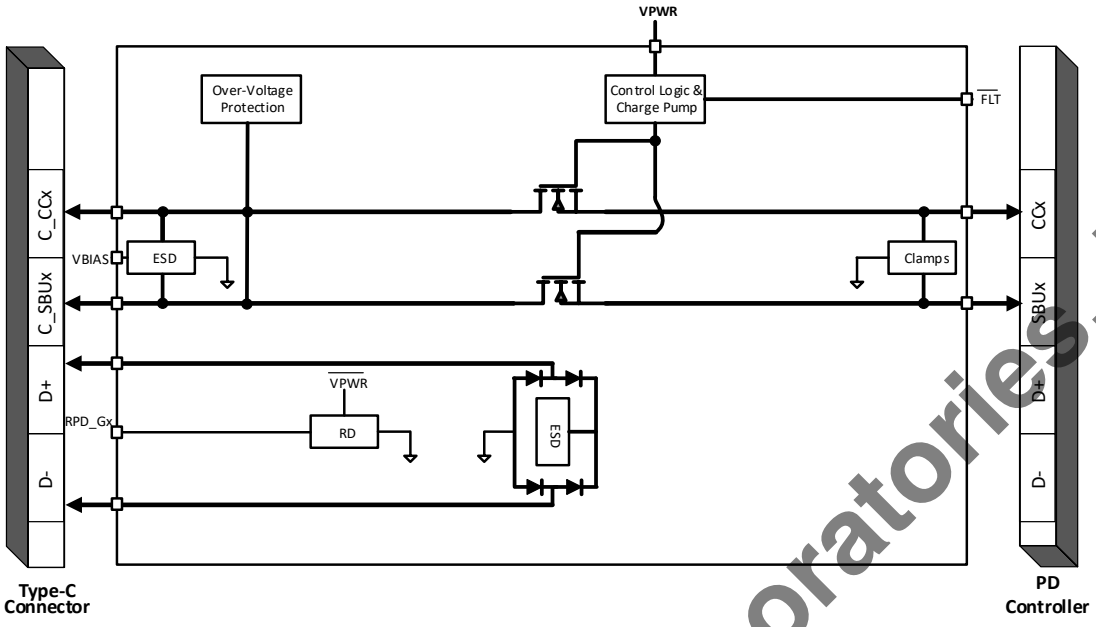

5. Functional Description

(1) HV switches for CC/SBU Channels

DR1618C has four FET switches for both CCx and SBUx with OVP protection function. With smaller connector size and reduced pin pitch, USB Type-C® devices. When the VBUS voltage is increased to higher than 5V through the USB Power Delivery protocol, an improper unplugging of a USB Type-C® port may result in damage on CCx and SBUx related circuitry due to short-circuiting with VBUS. DR1618C is equipped with switch to function the protection accordingly with the voltage hit. The switch embedded is thoroughly design and will not cause any impact on USB PD communication for BMC data transmission. Moreover, Vconn voltage can be provided through the switch from C_CCx to CCx with extremely low voltage drop.

(2) High Voltage Protection

DR1618C provides user-friendly protection solution for your product in preventing unexpected short-circuiting to VBUS with high voltage strike. DR1618C solution integrates an internal circuitry for the C_CCx and C_SBUx pins that tolerates high voltages and ensures a protection of up to 28V-DC. When being struck by an unexpected short-circuiting to VBUS, it will have RLC elements on the interface with a ringing voltage up to 44V. In order to solve this problem effectively, it is crucial to add the protection device like DR1618C. Meanwhile, once DR1618C detect OVP circuit, it will turn off the switch to disconnect the C_CCx pin and CCx pin or C_SBUx pin to SBUx pin within a rapid period.

Confidential for DIVA Laboratories, Ltd.

COPYRIGHT © 2021, HONGKONG DERUN MICROELECTRONICS COMPANY LIMITED

(3) Dead Battery Mode

The dead battery mode allows battery-powered systems to be powered by a low DC voltage (typ. 3.3V). It will be enabled by VBUS when the device is out of battery. According to USB PD protocol requirement, when the battery is extremely out of battery to 0%, the product will be triggered to enter Dead Battery Mode. When the product being plugged to power provider, the CC1/2 pin voltage level of the device will need to be pulled low so that the VBUS is able to provide the power to consumer side. When RPD_Gx is connected to C_CCx, DR1618C presents an Rd pull-down resistor to make the USB Type-C® DFP device entering attached mode and allow VBUS power to let UFP device under dead battery mode. Once VPWR is powered, the Rd pull-down resistor will be disabled.

(4) ESD Protection

As integrated circuit chipsets become more sensitive to the stress from electrostatic discharge (ESD) and other transient voltage surges, the circuit protection device becomes much more important. DR1618C integrates ESD protection device in accordance to IEC61000-4-2 requirement, DR1618C allows C_CCx or C_SBUx pins to pass at least of ±8KV contact discharge. Through this feature, system engineers can save PCB space and reduce external BOM costs when considering system ESD protection. In addition, the surge protection voltage of DR1618C can reach ±35V.

6. Absolute Maximum Ratings

Parameter	Min.	Max.	Unit
VPWR	-0.3	6	V
C_CC1, C_CC2, C_SBU1, C_SBU2	-0.3	28	V
CC1, CC2, SBU1, SBU2	-0.3	6	V
VBIAS	-0.3	28	V
/FLT	-0.3	6	V
D1, D2	-0.3	6	V
T_A, Ambient temperature when operating	-40	85	˚C
T_{STG}, Ambient temperature when storage	-40	150	˚C
θ_{JA}, thermal resistance, junction to ambient(1)		75.5	˚C/W
θ_{JC}, thermal resistance, junction to package(2)		44.9	˚C/W

Note.1 Dissipation on 2 layers PCB.
Note.2 Dissipation on 2 layers PCB with heat sink.

Confidential for DIVA Laboratories, Ltd.

COPYRIGHT © 2021, HONGKONG DERUN MICROELECTRONICS COMPANY LIMITED

7. ESD Ratings

Parameter		Value	Unit
Human-Body model (HBM), JEDEC specification	C_CC1, C_CC2, C_SBU1, C_SBU2	±8000	V
	Other Pins	±2000	V
Machine model (MM), JEDEC specification		±200	V
Charged-Device model (CDM), JEDEC specification		±500	V
IEC 61000-4-2, C_CC1, C_CC2, C_SBU1, C_SBU2	Contact discharge	±8000	V
	Air discharge	±15000	V

8. Recommended Operating Conditions

Parameter	Min.	Typ.	Max.	Unit
VPWR power supply range	2.7	3.3	5.5	V
C_CC1, C_CC2, CC1, CC2 voltage range	0		5.5	V
C_SBU1, C_SBU2, SBU1, SBU2 voltage range	0		4.0	V
VPWR capacitor value	0.47	1		uF
VBIAS capacitor value		0.1		uF
/FLT pull high resistance	2		200	KΩ

9. Electrical Characteristics

(T_A= 25˚C, VPWR= 3.3V, unless otherwise noted.)

Parameter	Test condition	Min.	Typ.	Max.	Unit
CC OVP Switches					
R_{ON_CC}	Resistance between connector and device side of CC OVP switches when it is on state.		280	335	mΩ
C_{ON_CC}	Capacitance between C_CCx to GND or CCx to GND when switch is on. Tested with 0V to 1.2V, f =400kHz.		60		pF
R_{DB}	Pull low resistor for dead battery condition. Measured when device is unpowered.	4.1	5.1	6.1	KΩ
V_{TH_DB}	Threshold voltage to turn on the FET in series with dead battery resistor. Device is unpowered. I_CCx= 80uA.	-	1.4	-	V
V_{TH_OVP}	Threshold voltage to turn off the CC OVP switches. Increase voltage at C_CCx pin until /FLT goes low.	5.6	6	6.45	V
BW_{ON}	The -3dB frequency between C_CCx to CCx.		75		MHz

Confidential for DIVA Laboratories, Ltd.

V_{HV_CC}	The affordable voltage range at C_CCx when SHORT-TO-VBUS occurred. Tested by hot-plug C_CCx with 1 meter cable and place 30Ω resistor to GND at CCx.			28	V
V_{CLAMP_CC}	The clamp voltage at CCx when SHORT-TO-VBUS occurred. Tested with 30Ω load on CCx, hot-plug C_CCx with 28V-DC source.		7.5		V
SBU OVP Switches					
R_{ON_SBU}	Resistance between connector and device side of CC OVP switches when it is on state.		3	4.875	Ω
C_{ON_SBU}	Capacitance between C_CCx to GND or CCx to GND when switch is on.		36		pF
V_{TH_OVP}	Threshold voltage to turn off the SBU OVP switches. Increase voltage at C_SBUx pin until /FLT goes low.	4.2	4.65	4.95	V
BW_{ON}	The -3dB frequency between C_SBUx to SBUx.		168		MHz
V_{HV_SBU}	The affordable voltage range at C_SBUx when SHORT-TO-VBUS occurred. Tested by hot-plug C_SBUx with 1 meter cable and place 100nF capacitor in series with 30Ω resistor to GND at SBUx.			28	V
V_{CLAMP_SBU}	The clamp voltage at SBUx when SHORT-TO-VBUS occurred. Tested with 150nF in series with 40Ω resistor to GND at SBUx, hot-plug C_CCx with 28V-DC source.		7		V
VPWR					
UVLO	Increase VPWR voltage until OVP switches turned on.	2.1	2.3	2.5	V
Supply Current	Supply VPWR 3.3V(typ.) ~5.5V(max.), measure the current flow into VPWR.	40	55	70	uA
Leakage Current and I/O					
$I_{CC\_LEAK\_NOM}$	Force 3.6V at C_CCx pin, CCx is floated, measure the current flow into C_CCx pin. The current should be same if force 3.6V at CCx pin and C_CCx is left floating. VPWR= 3.3V.		5		uA
$I_{SBU\_LEAK\_NOM}$	Force 3.6V at C_SBUx pin, SBUx is floated, measure the current flow into C_SBUx pin. The current should be same if force 3.6V at SBUx pin		3		uA

Confidential for DIVA Laboratories, Ltd.

COPYRIGHT © 2021, HONGKONG DERUN MICROELECTRONICS COMPANY LIMITED

	and C_SBUx is left floating. VPWR= 3.3V.				
$I_{C\_CC\_LEAK\_HV}$	Force 28V at C_CCx pin, CCx is 0V, measure the current flow into C_CCx pin.		150		uA
$I_{C\_SBU\_LEAK\_HV}$	Force 28V at C_SBUx pin, SBUx is 0V, measure the current flow into C_SBUx pin.			35	uA
$I_{CC\_LEAK\_HV}$	Force 28V at C_CCx pin, CCx is 0V, measure the current flow out of CCx pin.			3	uA
$I_{SBU\_LEAK\_HV}$	Force 28V at C_SBUx pin, SBUx is 0V, measure the current flow out of SBUx pin.			3	uA
I_{Dx_LEAK}	Force 3.6V at Dx pin and measure the current flow into Dx pin.			1	uA
V_{OL}	Force 3mA and measure the voltage level at /FLT pin		0.5		V
OVER TEMPERATURE PROTECTION					
T_{OTP_RISING}	The rising over-temperature protection shutdown threshold.		160		˚C
$T_{OTP\_FALLING}$	The falling over-temperature protection shutdown threshold.		130		˚C
T_{SD_HYST}	The over-temperature protection shutdown threshold hysteresis.		30		˚C
Timing					
t_{ON_SWITCH}	The time period between VPWR UVLO and switch FET turned on.		1.2	1.5	mS
t_{OFF_DB}	The period between VPWR UVLO and dead battery resistor removed.		5.2	6.2	mS
t_{OVP_CC}	The time period between OVP event occurred at CCx and switch FET turned off.		60		nS
t_{OVP_SBU}	The time period between OVP event occurred at SBUx and switch FET turned off.		60		nS
$t_{OVP\_CC\_RECOVERY}$	The time period between OVP event removed at CCx and switch FET turned back to on.		1		mS
$t_{OVP\_SBU\_RECOVERY}$	The time period between OVP event removed at SBUx and switch FET turned back to on.		1		mS
t_{OVP_FLT}	The time period between OVP event occurred and /FLT pin goes to low state.		21		uS
$t_{OVP\_FLT\_RELEASE}$	The time period between OVP event removed and /FLT pin goes back to high state.		4		mS

Confidential for DIVA Laboratories, Ltd.

10. Typical Operating Characteristics

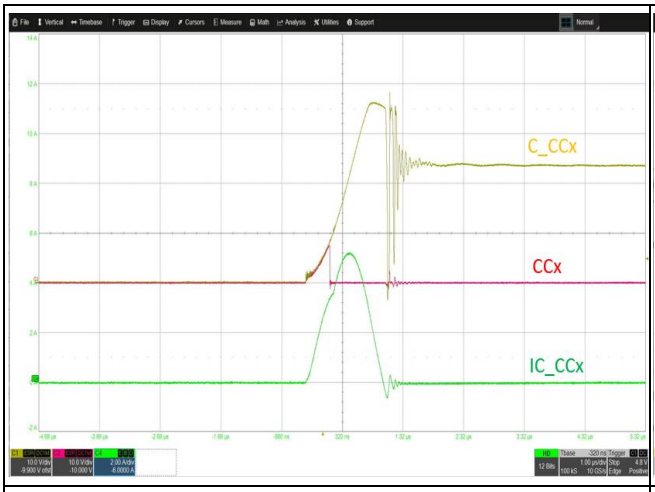

Fig.1 Hot-Plug with 24V at C_CC pin

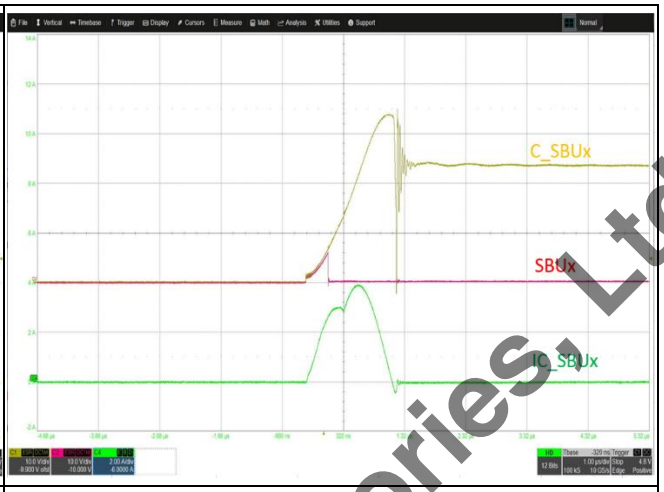

Fig.2 Hot-Plug with 24V at C_SBU pin

11. Typical Application Circuit

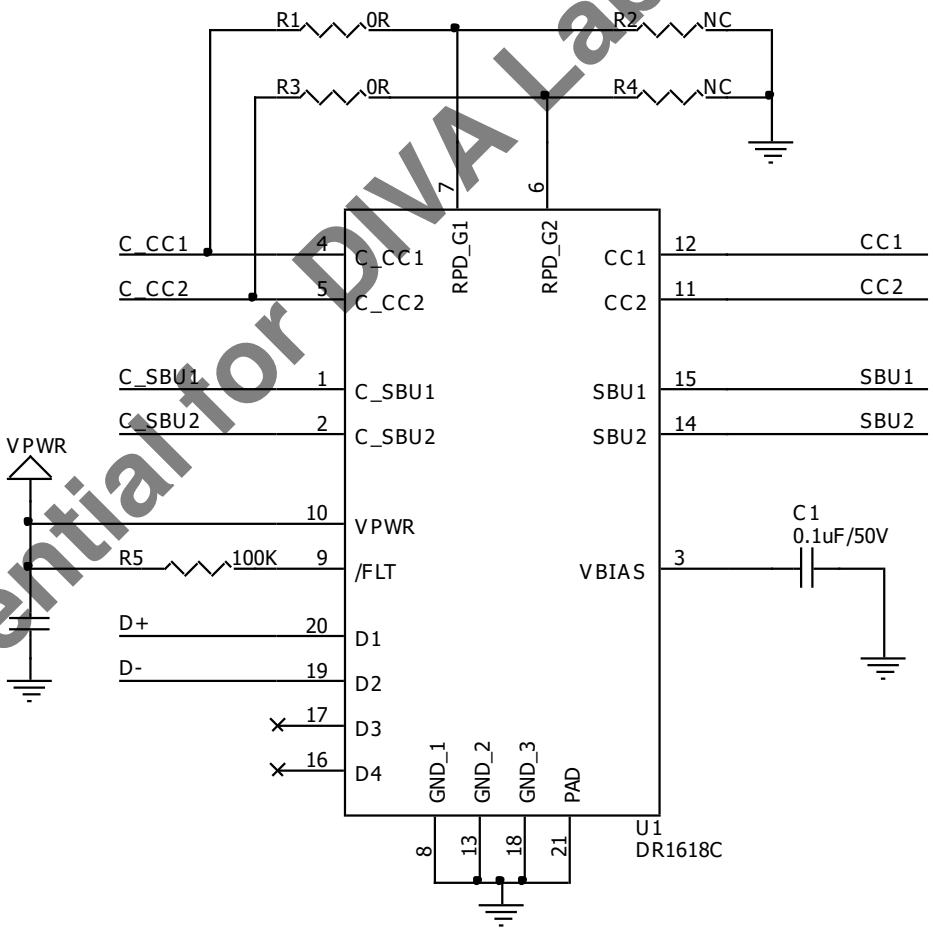

Fig.3 Application circuit

Confidential for DIVA Laboratories, Ltd.

12. Application Information

Power Supply and Operation

When V_{PWR} is below V_{UVLO}, the CC1/CC2/SBU1/SBU2 switches are turned off and the CC dead battery R_D is on(if RPD_Gx is connected with C_CCx). Once V_{PWR} goes above V_{ULVO}, DR1618C turns on the CCx/SBUx switches and turn off the CC dead battery R_D. DR1618C provides the immediately protections when C_CCx or C_SBUx short to high voltages, like VBUS. Also provides ESD protection to guarantee IEC61000-4-2 ESD specification. The CC dead battery R_D makes UFP devices could be charged when out of battery power. Basically, DR1618C only needs two external capacitors for normally operation. The switches status can be check in Figure.4.

INPUT					OUTPUT			
Power supply	**C_CCx**	**C_SBUx**	**RPD_Gx**	**TJ**	**CC switch**	**SBU switch**	**CC Dead battery R_D**	**/FLT**
V_{PWR}<UVLO	X	X	Short to ground	X	OFF	OFF	OFF	Hi-Z
	X	X	Short to C_CCx	X	OFF	OFF	ON	Hi-Z
V_{PWR}>UVLO	<OVP	<OVP	X	<OTP	ON	ON	OFF	Hi-Z
	>OVP	<OVP	Short to ground	<OTP	OFF	OFF	OFF	LOW (Fault Condition)
			Short to C_CCx				ON	LOW (Fault Condition)
	<OVP	>OVP	Short to ground	<OTP	OFF	OFF	OFF	LOW (Fault Condition)
			Short to C_CCx				ON	LOW (Fault Condition)
	X	X	Short to ground	>OTP	OFF	OFF	OFF	LOW (Fault Condition)
			Short to C_CCx				ON	LOW (Fault Condition)

Fig.4 Control Logic Table

Capacitors Selection

There are two capacitors required to make DR1618C operate properly, one for VPWR and one for VBIAS. It is recommended to place a 1uF capacitor closed to the VPWR pin. The voltage rating should be higher than the operation range of 5.0V(Max.). A 0.1uF capacitor is recommended to place as closed as possible to the VBIAS pin. The VBIAS capacitor improves protection performance when a SHORT-TO-VBUS event occurs. The suggested minimum requirement for the VBIAS capacitor is 50V. Since a forward diode is built internally from C_CCx/C_SBUx pins to the VBIAS pin, high voltage can be observed when SHORT-TO-VBUS occurs. The recommended part number is listed in the table below.

Parameter	Size	Voltage Rating	Capacitance	Ref. Part Number
VBIAS Capacitor	0603	50V	0.1uF	GCM188R71H104KA57J

/FLT Operation

DR1618C provides an alerting function through /FLT pin. /FLT is an open drain structure within DR1618C. A pull-up resistor (R1 100K) is placed between the /FLT pin and a DC source voltage (VPWR) to provide and define the /FLT high level. Normally the best way to get DC source is to attach the device VPWR, and the

Confidential for DIVA Laboratories, Ltd.

suggested to use 2KΩ to 200KΩ ohm resistor. When the SHORT-TO-VBUS occurs and VBUS level is high enough to trigger over-voltage-protection, /FLT will be pulled to low state. Conversely, it will keep on high state on normal conditions.

Dead Battery Operation

When a device is battery-powered, the situation when the battery is empty must be considered. If this happens on a device with USB type-C ports, it is an excellent solution to charge the dead battery via the USB type-C ports. But when the device is completely out of battery, it will not be able to provide power supply to DR1618C and the CCx switches remain off. As a result, the USB type-C adapter does not output VBUS because the Rd resistance cannot be seen on the CC pin connector side. To solve this problem, RPD_Gx needs to be connected with CCx then DR1618C will generate Rd resistance on C_CCx pins when there is no power. It replaces the Rd resistance of the original PD controller to make the USB type-C adapter output VBUS.

Furthermore, When the PD controller receives power from the USB type-C power supply terminal, it will also provide power to the DR1618C. Next, the CC switch is turned on and Rd is turned off. When the CC switch is turned on, the channel resistance gradually decreases, causing the PD power supply terminal to not see Rd for a short period of time. Some USB type-C chargers do not set a debounce time on the Rd detection, so even if such a short disappearance, it may cause the VBUS to be turned off. In order to maintain the Rd pull-down resistance, after receiving the power, the DR1618C first turns on the CC switch, and then removes its dead battery Rd. The timing sequence is as shown in the figure below.

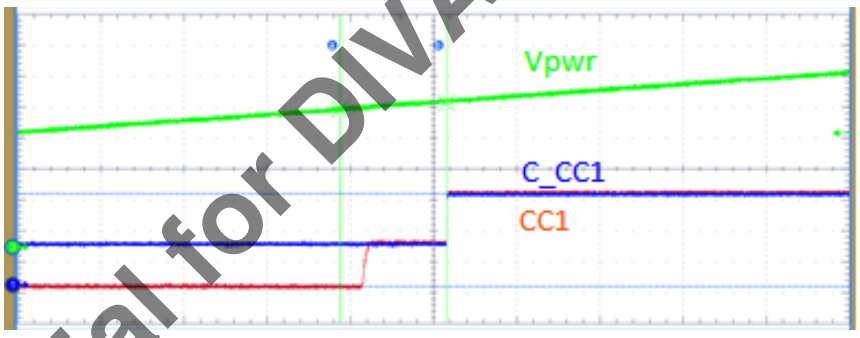

Fig.5 ON/OFF sequence of CC dead battery R_D

Layout Guideline

To achieve good protection performance while maintaining good signal integrity. The PCB trace routing and component placement should be considered.

- Place C1 and C2 close to VPWR pin and VBIAS pin.
- Keep the signal traces as straight as possible and prevent sharp corner.

In addition, USB type-C has the pins other than the protected ones.

For the unprotected pins:

- Keep the traces of unprotected signals away from the protected pins and traces.

Confidential for DIVA Laboratories, Ltd.

COPYRIGHT © 2021, HONGKONG DERUN MICROELECTRONICS COMPANY LIMITED

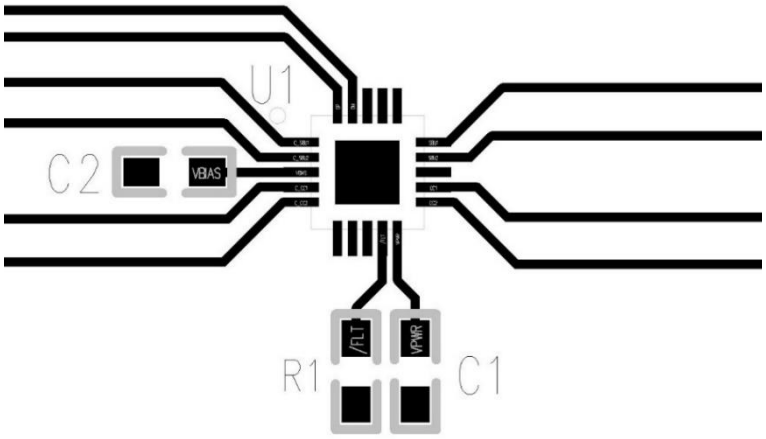

Fig.6 Reference of DR1618C PCB layout

13. Package Outline

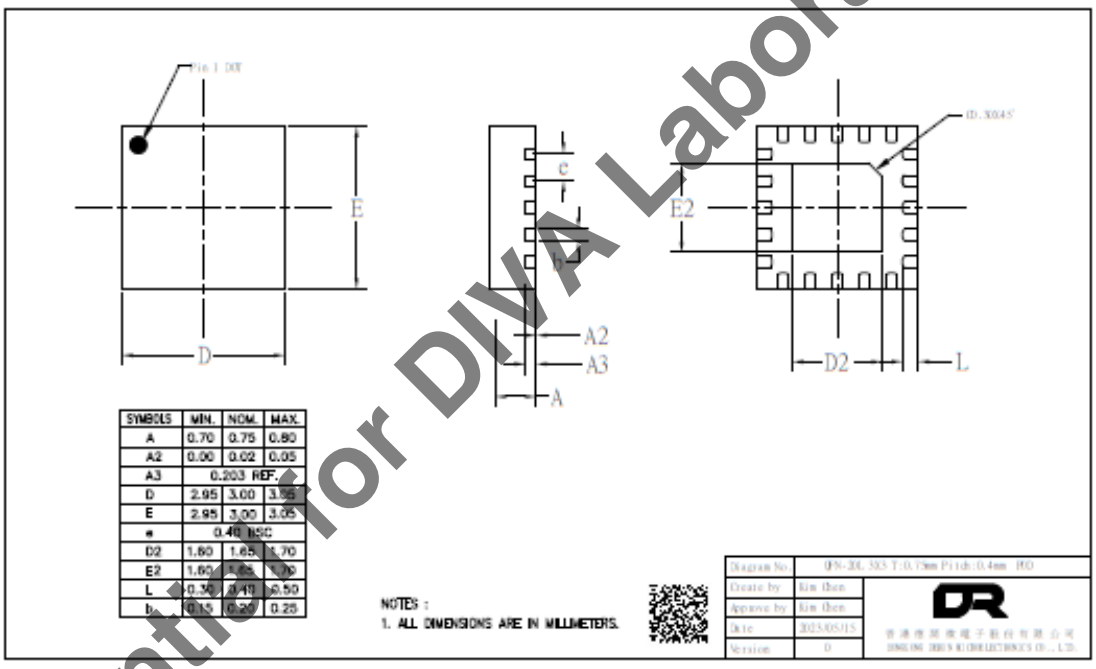

SYMBOLS	MIN.	NOM.	MAX.
A	0.70	0.75	0.80
A2	0.00	0.02	0.05
A3		0.203 REF.	
D	2.95	3.00	3.05
E	2.95	3.00	3.05
e		0.40 BSC	
D2	1.60	1.65	1.70
E2	1.60	1.65	1.70
L	0.30	0.40	0.50
b	0.15	0.20	0.25

14. Ordering Information

Part No.	Package	Package Type	MOQ
DR1618CQC	QFN-20L 3mm×3mm	Tape & Reel	5,000

Confidential for DIY A Laboratories, Ltd.

COPYRIGHT © 2021, HONGKONG DERUN MICROELECTRONICS COMPANY LIMITED

15. Revision History

Version	Date	Revision Content
0.1	2022/3/7	Initial released
1.0	2023/5/11	POD updated.
2.0	2023/8/18	Description/Feature updated

Confidential for DIVA Laboratories, Ltd.

COPYRIGHT © 2021, HONGKONG DERUN MICROELECTRONICS COMPANY LIMITED