REV.	DATE	DESCRIPTION	BY	APVD
-	2023-12-20	RELEASE FOR PRODUCTION	Laslie	

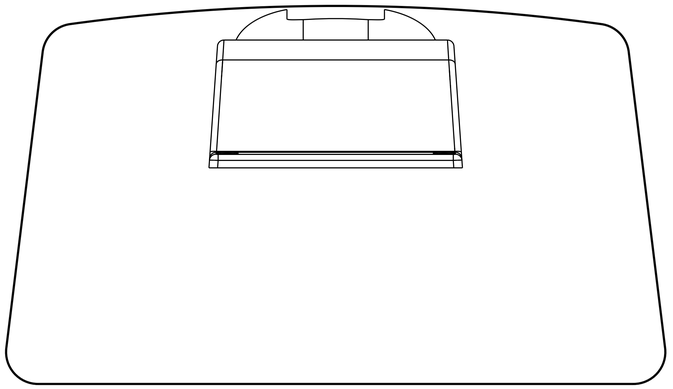

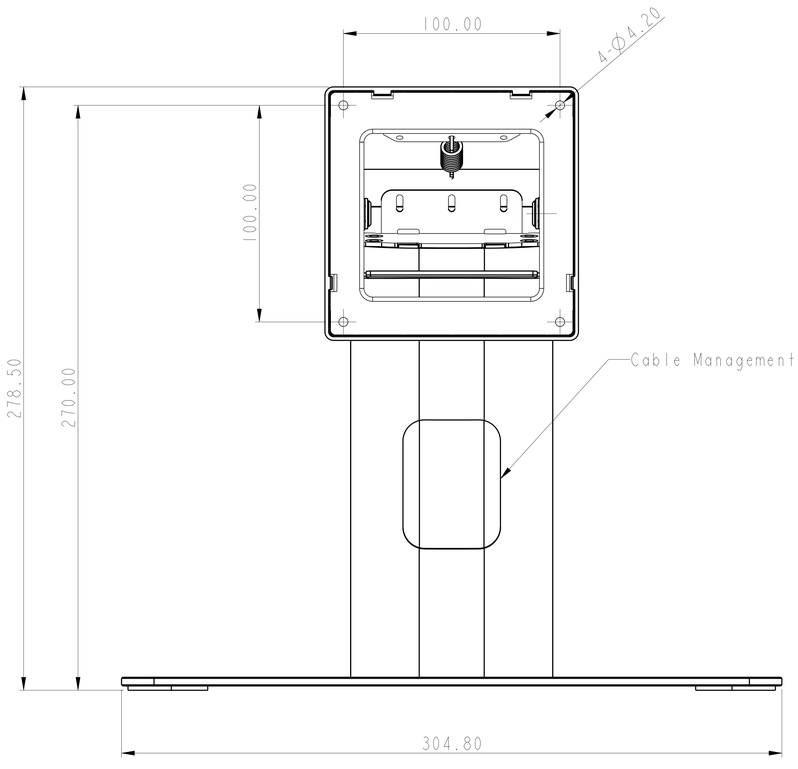

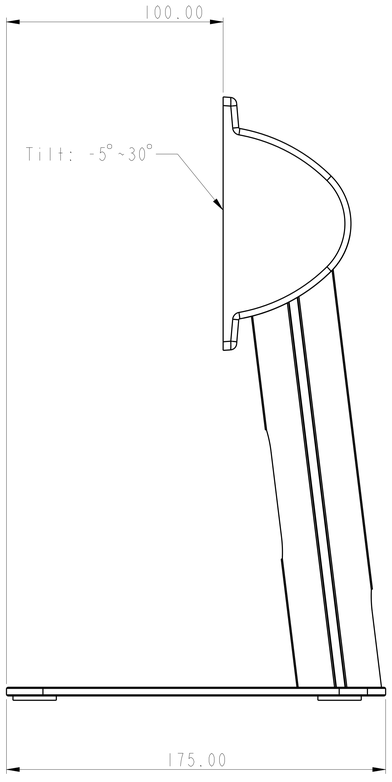

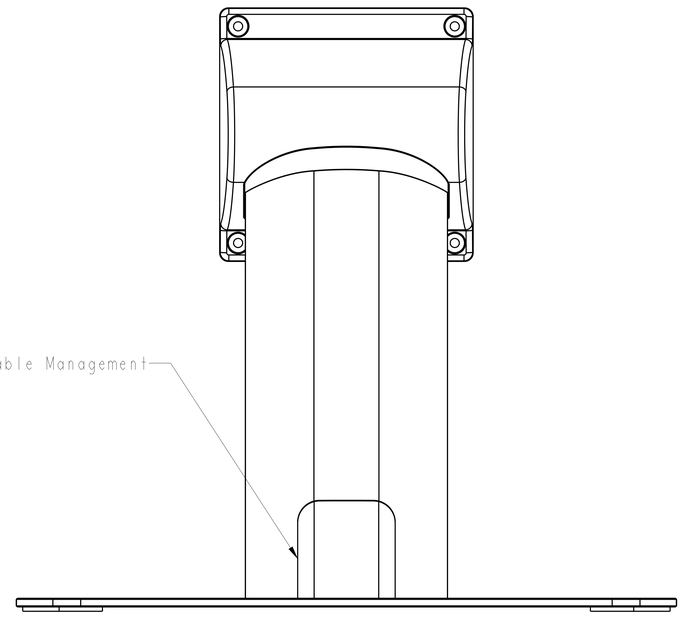

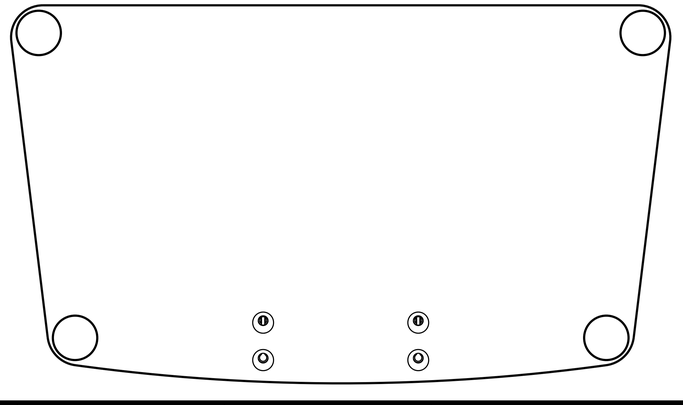

RANGE OF DIMENSION	TOLERANCE CLASS DESIGNATION f	m	c
UP TO 30	±0.10	±0.20	±0.50
ABOVE 30~120	±0.15	±0.30	±0.80
ABOVE 120~315	±0.20	±0.50	±1.20
ABOVE 315~1000	±0.30	±0.80	±2.00
ANGLE ±1° (±1.75/100)			

THIRD ANGLE PROJECTION

UNITS: mm | SCALE: 1/1 | SHEET: 1 OF 1 | MODEL NO.:

MATERIAL: | TREATMENT:

DSGD by Laslie 2023-12-20

CHK by

APVD by

APVD NO.:

3D FILE NAME: BASE_ASSY_01

PART NAME: STAND

PART NO.: 1A50320000 | REV.

DIVA Laboratories ,Ltd.