

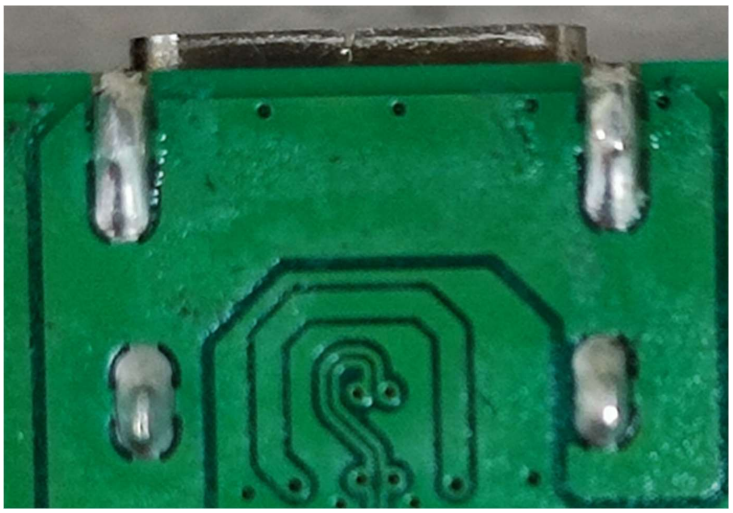



設計驗證
工程課
2024.01.12
發行
鈺德科技開發股份有限公司

WPI

世平興業股份有限公司
World Peace Industrial Co.,Ltd.

WPI Group--
台灣 : 世平興業股份有限公司
(台北 / 新竹 / 高雄)　　(香港 / 深圳 / 上海 / 北京)
東南亞 : WPI International(S)Ptc.Ltd
(新加坡/馬來西亞(吉隆坡,檳城)/泰國/菲律賓/印尼)
本承認書所承認之產品, 將依 貴方指定:由上述任一地點之WPI當地公司交運

承 認 申 請 書
APPROVED SHEET

貴公司料號 **YOUR PART NO.**	3FU02401810 (F0295)
品　　名 **DESCRIPTIN**	2012670005 **USB3.0_F (C TYPE,2012670005_H,Molex)**
發 送 日 期 **SENDING DATE**	2024/1/10
世平承認章 **WPI APPROVAL**	台北市南港區經貿二路189號8樓 世平興業股份有限公司 TEL:(02)2191-0158
貴公司承認章 **YOUR APPROVAL**	設計驗證 工程課 2024.01.12 發行

Office:+886-2-2191-0158
Fax:+886-2-2653-3522
地址: 11568台北市南港區
經貿二路189號8樓

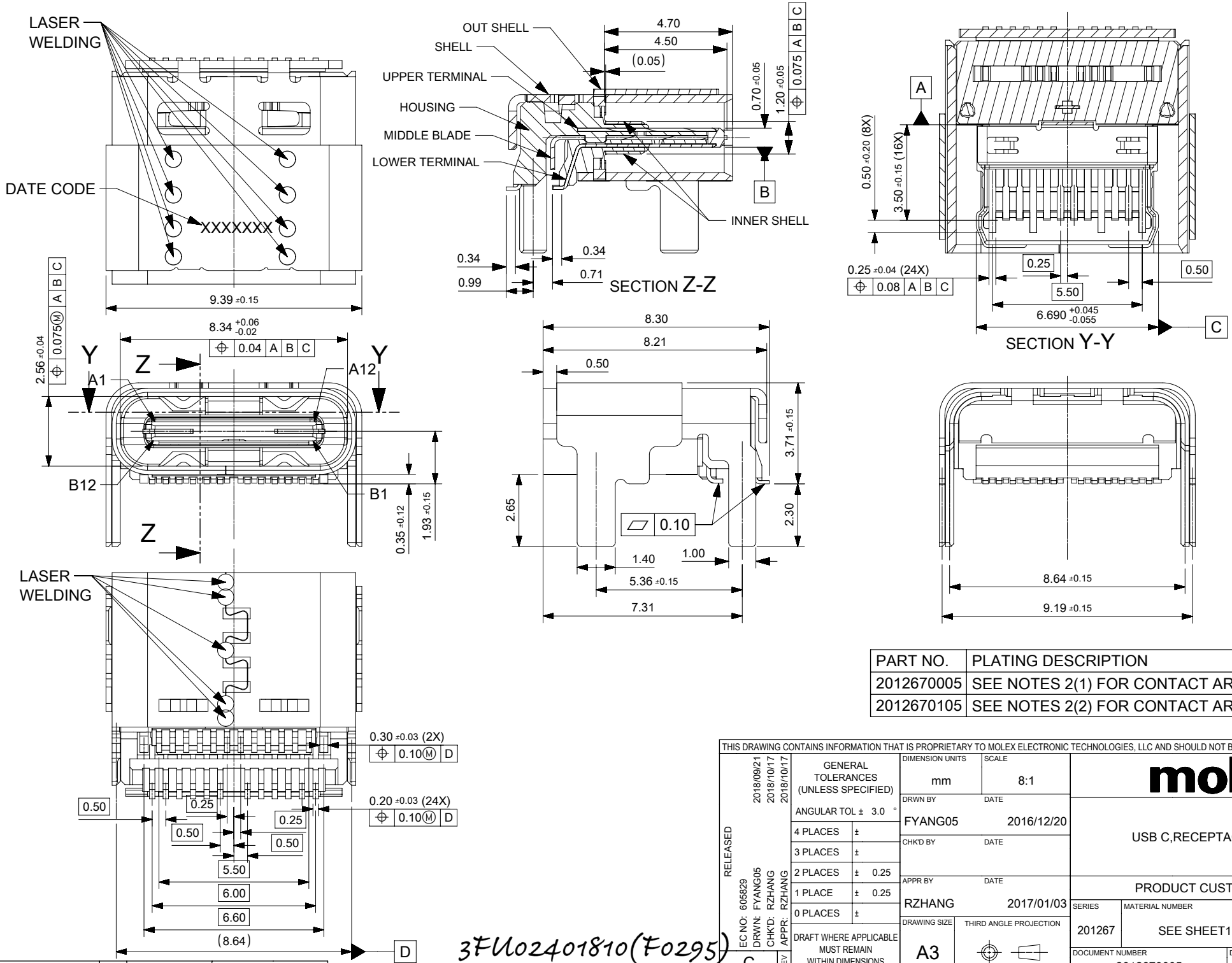

PART NO.	PLATING DESCRIPTION
2012670005	SEE NOTES 2(1) FOR CONTACT AREA
2012670105	SEE NOTES 2(2) FOR CONTACT AREA

設計驗證
工程課
2024.01.12
發行
旺矽科技開發股份有限公司

THIS DRAWING CONTAINS INFORMATION THAT IS PROPRIETARY TO MOLEX ELECTRONIC TECHNOLOGIES, LLC AND SHOULD NOT BE USED WITHOUT WRITTEN PERMISSION

RELEASED
2018/09/21
2018/10/17
2018/10/17
EC NO: 605829
DRWN: FYANG05
CHK'D: RZHANG
APPR: RZHANG

GENERAL TOLERANCES (UNLESS SPECIFIED)
ANGULAR TOL ± 3.0 °
4 PLACES ±
3 PLACES ±
2 PLACES ± 0.25
1 PLACE ± 0.25
0 PLACES ±
DRAFT WHERE APPLICABLE MUST REMAIN WITHIN DIMENSIONS

C
REV

DIMENSION UNITS: mm
SCALE: 8:1
DRWN BY: FYANG05
DATE: 2016/12/20
CHK'D BY:
DATE:
APPR BY: RZHANG
DATE: 2017/01/03
DRAWING SIZE: A3
THIRD ANGLE PROJECTION

molex

USB C,RECEPTACLE,TOP MOUNT

PRODUCT CUSTOMER DRAWING

SERIES	MATERIAL NUMBER	CUSTOMER
201267	SEE SHEET1	

DOCUMENT NUMBER	DOC TYPE	DOC PART	SHEET NUMBER
2012670005	PSD	000	1 OF 2

3FU02401810(F0295)

RELEASE STATUS	P1	RELEASE DATE	2018/10/17 07:04:20

FORMAT: master-tb-prod-A3
REVISION: G
DATE: 2015/12/14

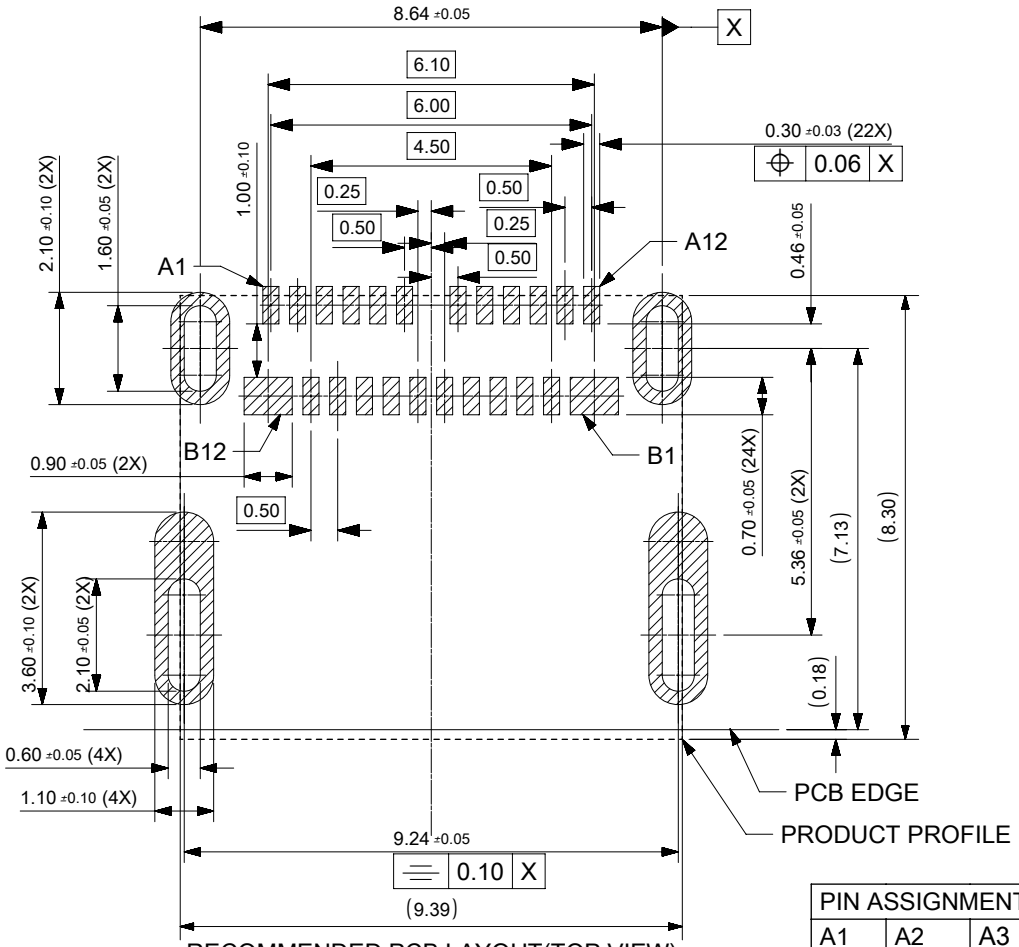

RECOMMENDED PCB LAYOUT(TOP VIEW)
(THICKNESS: 1.60MM)

NOTES:

1. MATERIAL,
   HOUSING: NYLON WITH GLASS FILLED, BLACK, UL94V-0.
   TERMINALS: COPPER ALLOY
   SHELL: STAINLESS STEEL;
   OUTTER SHELL: STAINLESS STEEL;
   INNER SHELL: STAINLESS STEEL;
   MIDDLE BLADE: STAINLESS STEEL;
2. PLATING:
   TERMINAL: CONTACT AREA:
   (1) 0.76 MICROMETER MIN. GOLD PLATING
   (2) GOLD FLASH OVER 0.76 MICROMETER NIN PALLADIUM/NICKEL PLATING
   SOLDER TAIL: 0.05 MICROMETER MIN. GOLD PLATING
   UNDER PLATING: 2 MICROMETER MIN. NICKEL PLATING OVERALL
   SHELL: 1 MICROMETR MIN. SOLDERABLE NICKEL PLATING OVERALL
   INNER SHELL: CLEANING
   MIDDLE BLADE: 2 MICROMETER MIN. TIN PLATING OVER THE SOLDER TAIL AND 1 MICROMETER NICKEL PLATING OVERALL
3. PRODUCT SPEC REFER TO PS-201267-001.
4. PACKAGE SPEC REFER TO 201267005PDDPK1
5. COPLANARITY OF SMT PINS SOLDER TAIL IS 0.10 MAX. BEFORE AND AFTER REFLOW
6. T/H SOLDER TAIL POSITION BE CONTROLED BY GAUGE
7 . LASER WELDING POINT FOR REFERENCE
8. PRODUCT COMPLIANT TO ROHS DIERTIVE 2011/65/EU AND ELV DIRECTIVE 2000/53/EC
9. DATE CODE: XX XX XX XX
   YEAR MONTH DATE HOUR

設計驗證
工程課
2024.01.12
發行
鈺鋒科技開發股份有限公司

PIN ASSIGNMENT FOR DIRECT CONNECT APPLICATIONS

A1	A2	A3	A4	A5	A6	A7	A8	A9	A10	A11	A12	BLADE	SHELL
GND	TX1+	TX1-	VBUS	CC1	D+	D-	SUB1	VBUS	RX2-	RX2+	GND	GROUND	GROUND
GND	RX1+	RX1-	VBUS	SBU2	D-	D+	CC2	VBUS	TX2-	TX2+	GND		
B12	B11	B10	B9	B8	B7	B6	B5	B4	B3	B2	B1		

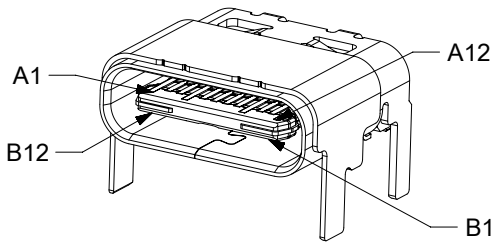

3FU02401810(F0295)

THIS DRAWING CONTAINS INFORMATION THAT IS PROPRIETARY TO MOLEX ELECTRONIC TECHNOLOGIES, LLC AND SHOULD NOT BE USED WITHOUT WRITTEN PERMISSION

RELEASED
EC NO: 605829 2018/09/21
DRWN: FYANG05 2018/10/17
CHK'D: RZHANG 2018/10/17
APPR: RZHANG

GENERAL TOLERANCES (UNLESS SPECIFIED)
ANGULAR TOL ± 3.0 °

4 PLACES	±
3 PLACES	±
2 PLACES	± 0.25
1 PLACE	± 0.25
0 PLACES	±

DRAFT WHERE APPLICABLE MUST REMAIN WITHIN DIMENSIONS

REV C

DIMENSION UNITS: mm
SCALE: 10:1
DRWN BY: FYANG05 DATE: 2016/12/20
CHK'D BY: DATE:
APPR BY: RZHANG DATE: 2017/01/03
DRAWING SIZE: A3
THIRD ANGLE PROJECTION

molex

USB C,RECEPTACLE,TOP MOUNT

PRODUCT CUSTOMER DRAWING

SERIES	MATERIAL NUMBER	CUSTOMER
201267	SEE SHEET1	

DOCUMENT NUMBER	DOC TYPE	DOC PART	SHEET NUMBER
2012670005	PSD	000	2 OF 2

RELEASE STATUS | P1 | RELEASE DATE | 2018/10/17 07:04:20

FORMAT: master-tb-prod-A3
REVISION: G
DATE: 2015/12/14

PRODUCT SPECIFICATION

TITLE

1.0 SCOPE
This Product Specification covers the requirement of USB type C receptacle.

2.0 PRODUCT DESCRIPTION

2.1 PRODUCT NAME AND SERIES NUMBER
Product name: USB type C receptacle
Series number: 201267

2.2 DIMENSIONS, MATERIALS, PLATINGS AND MARKINGS
See sales drawing: 201267****PSD000

3.0 APPLICABLE DOCUMENTS AND SPECIFICATIONS
Industry Standard Reference: Universal Serial Bus Type-C Cable and Connector Specification, Revision 1.1,
Test standard reference: EIA-364 series, IEC 60068 series
Test compliant reference: Universal Serial Bus Type-C Connectors and Cable Assemblies Compliance Document, Revision 1
Dimensions see sales drawings and other sections of this specification for the relevant reference documents. In cases where the specification differs from the drawings, the sales drawings take precedence.

4.0 RATINGS

4.1 VOLTAGE
30 Volts DC/AC Max.

4.2 CURRENT
5 Amps MAX. for total V_{BUS} pins (Pin A4, A9, B4, B9),
1.25 Amps MAX. for Vconn (B5 of plug) with return path through the corresponding GND pins(Pin A1, A12, B1, B12). 0.25 Amps MIN. for all other contact.

4.3 TEMPERATURE
Operating: - 40°C to + 105°C(Including Terminal Temperature Rise)
Storage: - 40°C to + 85°C

5.1 ELECTRICAL REQUIREMENTS

ITEM	DESCRIPTION	TEST CONDITION	REQUIREMENT
5.1.1	Low Level Contact Resistance(LLCR)	Mate connector, The solder tail to the solder tail or cable attachment point of the plug, including any internal contacts and paddle card.Measure at 20 mV (max) open circuit at 100 mA. Per EIA-364-23	40 milliohms Max initial. It is not Exceed 50 milliohms after environmental test.
5.1.2	Insulation Resistance	Mate connector, apply 100 VDC between adjacent terminal or ground. Per EIA-364-21	100Megohms Min.
5.1.3	Dielectric Withstanding Voltage	Mate connector, apply 100 VAC(RMS) for 1 minute between adjacent terminal or ground. Per EIA-364-20 ,Method B.	No breakdown
5.1.4	Temperature Rise /current capability	Mate connector, and measure the temperature rise of contact when the current on power pins are signed as 0.5A,1.0A,1.5A,2A,2.5A,3A,3.5A,4A…until the T-rise is up to 85°C . Per EIA-364-70,Method 2	emperature change 30°C Max at 5A and Draft the temperature **derating curve**.

5.2 MECHANICAL REQUIREMENTS

ITEM	DESCRIPTION	TEST CONDITION	REQUIREMENT
5.2.1	Inserting force	Mate connector, at maximum rate 12.5mm/min. Per EIA-364-13	Insertion force: 5~20N
5.2.2	Extraction force	Un-mate connector, at maximum rate 12.5mm/min. Per EIA-364-13	Within the range of 8 N to 20 N. from 1 to 1,000 cycles , within the range of 6 N to 20 N. from 1,000 to 10,000 cycles. within the range of 4 N to 20 N. from 1,000 to 20,000 cycles.
5.2.3	Durability (Total 20000 Cycles)	Perform 4 plug/unplug cycles. Cycle rate of 500+/-50cycles per hour in test **Group4**	No mechanical damage Contact resistance is not exceed +50 milliohms，
		Perform 25 plug/unplug cycles. Cycle rate of 500+/-50cycles per hour in test **Group4**	No mechanical damage Contact resistance is not exceed +50 milliohms，

5.2.3 (Continue)	Durability (Total 20000 Cycles)	Perform 2468 plug/unplug cycles. Rotate the receptacle or plug 180° and perform 2,500 plug/unplug cycles. Rotate the receptacle or plug 180° and perform 2,500 plug/unplug cycles. Rotate the receptacle or plug 180 and perform 2,500 plug/unplug cycles. Cycle rate of 500+/-50 cycles per hour (Total of 10,000 plug/unplug cycles, flipping every 2,500 cycles). Then, Rotate the receptacle or plug 180 and perform 5,000 plug/unplug cycles. Rotate the receptacle or plug 180 and perform 5,000 plug/unplug cycles. (Total of 20,000 plug/unplug cycles, flipping every 5,000 cycles after 10,000cycles). Per EIA-364-09	No mechanical damage Contact resistance is not exceed +50 milliohms.
5.2.4	Durability (preconditioning)	Perform 50 unplug/plug cycles. Refer to EIA-364-09	No mechanical damage.
5.2.5	Reseating	Manually mate and unmate the connector for 3 cycles. Rate: 5 cycles/min. max. EIA 364-09	No mechanical damage.
5.2.6	4-Axis Continuity Test	Mate connector, The plug should be with cable and over mold, receptacle should be mounted on a 2-layer PCB, PCB thickness is between 0.8 and 1.0mm, the PCB shall be clamped on either side of receptacle no further than 5mm away from the solder tail, 8N tensile force shall be applied to the cable in a Perpendicular direction from interface, period is at least 10 seconds, including 4 orientations. Refer to section 8.0	No any discontinuities or Shorting to shell greater than 1μs duration in any of four orientations

5.3 ENVIRONMENTAL REQUIREMENTS

ITEM	DESCRIPTION	TEST CONDITION	REQUIREMENT
5.3.1	Solderability	Um-mate connector, Dip solder tails into the molten solder(held at 240-250°C) up to for in immersion duration 6s. Per EIA 364-52, Category 1.	Solder coverage: 95% Min. No mechanical damage or change to appearance.
5.3.2	Resistance to soldering Heat	Peak temperature in reflow:255°C (-0/+5°C) .Pb-free reflow profile refer to Section 7.0 ,two cycles. Per EIA 364-56	No mechanical damage or change to appearance s.
5.3.3	Temperature and Humidity (steady state)	Mate connector, Ambient temperature: + 85°C ± 2 °C Chamber humidity: 85 ± 2 % RH Test duration: 1008 h. Upon completion of the exposure period, the test specimens shall be conditioned at ambient room conditions for 1 to 2 hours, after which the specified measurements shall be performed. Per EIA-364-31	No mechanical damage. Contact resistance is not exceed 50 milliohms. Insulation resistance not less than 100, Mega ohms. Dielectric strength must meet Item 5.1.2
5.3.4	Thermal Shock	Mate Connector Low temperature TL: -40 °C High temperature TH: 105 °C Dwell time t1 (at TL/TH): 60 min. Transition time: <10 sec. No. of cycles: 100 cycles Refer to IEC 60068-2-14	No mechanical/electrical damage. Contact resistance is not Exceed 50 milliohms.

ITEM	DESCRIPTION	TEST CONDITION	REQUIREMENT
5.3.6	Thermal Disturbance	Mate connector,Cycle the connector between 15°C±3°C and 85°C±3°C, as measured on the part. Ramps should be a minimum of 2°C per minute, and dwell times should insure that contacts reach temperature extreme for a minimum of 5minutes. No humidity control. 10 cycles total.	Contact resistance is not exceed 50 milliohms.

5.3.7	Vibration	Mate connectors, and subject to the following vibration conditions, Random vibration 3 mutually perpendicular axes, 10~2000Hz, 0.02g2/Hz 15 minutes per plane Per EIA-364-28 condition VII, Test letter D	No mechanical damage Contact resistance is not exceed 50 milliohms. Signal discontinuity < 1 μs.
5.3.8	Mixed flowing gas test	Mate connectors. Samples should be placed in an environmentally controlled 'test chamber' that is monitored by a gas analyzing system for controlled concentrations of the specified gas mixture. Test coupons shall also be used and the weight gain reported. 30u'gold or Gold flash& 30u'Pd-Nickel plating for 7 days.15u'gold for 5 days. Gold flash for 3 days. Note: Per EIA-364-65 class II condition A	Contact resistance not exceed 50 milliohms.
5.3.9	Temperature life	Mate connectors, and subject to the conditions of 105°C for 120 hours. Per EIA-364-17 condition A	No mechanical damage and visible corrosion. Contact resistance is not exceed 50 milliohms.
5.3.10	Temperature life (precondition)	Mate connectors, and subject to the conditions of 105°C for 72 hours. Per EIA-364-17 condition A	No mechanical damage and visible corrosion. Contact resistance is not exceed 50 milliohms.
5.3.11	Mechanical Shock	Mate connectors, Shock wave form: half sinusoidal Acceleration: 50 g Shock duration (nominal): 11 ms No. of shocks: 10 per direction of each axis Refer to IEC 60068-2-29	No mechanical damage. Contact resistance is not Exceed 50 milliohms.
5.3.12	Dry Heat	Mate connectors, High temperature TH: 105°C Dwell time at TH: 1000 h Refer to IEC 60068-2-2 and	No mechanical/electrical damage. Contact resistance is not Exceed 50 milliohms.

The meaning of text "**mechanical damage**" in the table above is:

a. No significant corrosion at contact area
b. No adhesion problem of plating
c. No blistering of plating
d. No flaking of plating
e. No loosen parts
f. No cracks on any parts

5.0 TEST GROUPINGS

Test Item	Description	Group1	Group2	Group3	Group4	Group5	Group6	Group7	Group8	Group9	Group 10	Group 11
5.1.1	Low level contact resistance	1,4, 6	1,4, 6,8	1,4, 6	1,4, 6,8, 10	2, 10					1,5	1,6
5.2.4	Durability (preconditioning)	2	2	2	2							
5.1.2	Insulation resistance					12						2,7
5.1.3	Dielectric withstanding voltage					1, 11						
5.3.10	Temperature life (Preconditioning)			3	3							
5.3.9	Temperature life	3										
5.3.4	Thermal shock		3									
5.3.6	Thermal disturbance				7							
5.3.3	Cyclic temperature & humidity		5									
5.3.8	Mixed flowing gas				5							
5.3.7	Vibration			5								
5.2.5	Reseating	5	7		9							
5.1.4	Temperature rise							1				
5.2.1	Insertion force					4				2	2,6	3,8
5.2.2	Extraction force					5,7,9				3	3,7	4,9
5.2.3	Durability (4 cycles)					3						
	Durability (25cycles)					6						
	Durability (total 20000cycles)					8						
5.3.1	Solderability								1			
5.3.2	resistance to soldering Heat testing									1		
5.2.6	4-Axis Continuity Test						1					
5.3.11	Mechanical Shock										4	

5.3.12	Dry Heat											5
	Sample Quantity	5	5	5	5	5	5	5	5	5	10	10

6.0 PACKAGING

Parts shall be packaged to protect against damage during handling, transit and storage. Samples in the delivery condition shall be passed drop test with 1m height from concrete floor. The parts will be carried in tape & reels inside boxes. For detail package refer to packaging spec.

7.0 Recommended reflow profile

Reflow profile for soldering heat resistance testing

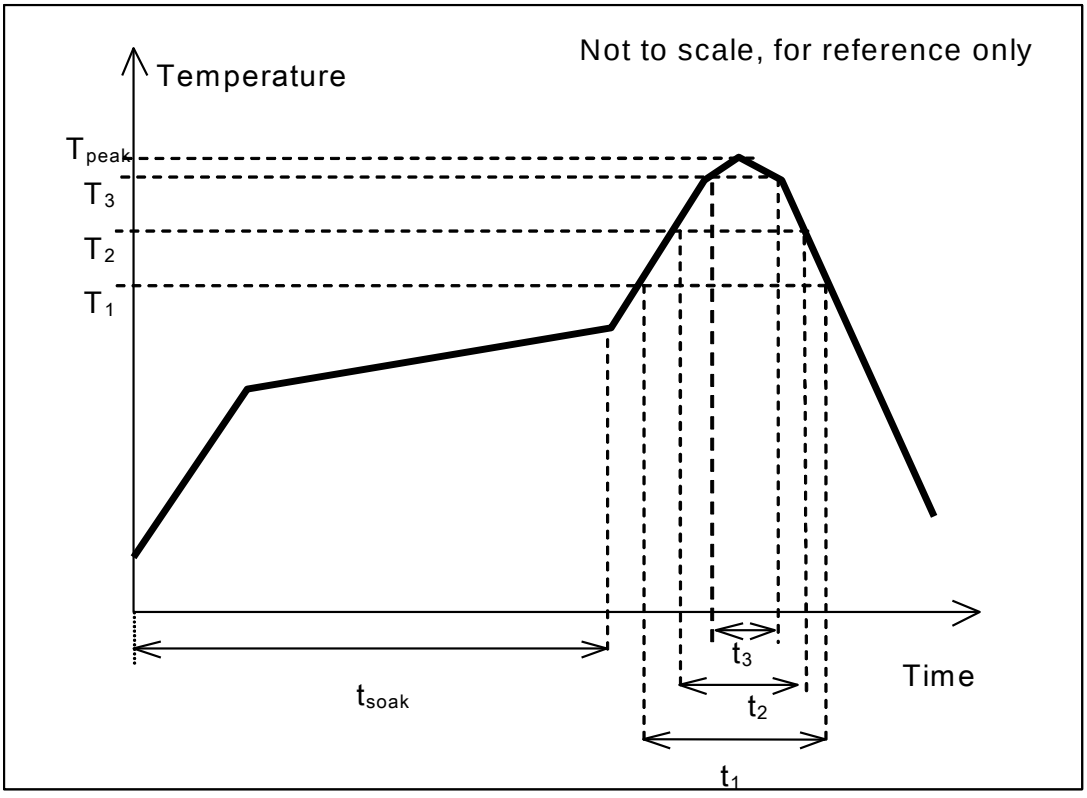

Time and temperature requirements:

Pb-free reflow profile requirements for soldering heat resistance		
Parameter	**Reference**	**Specification**
Average temperature gradient in preheating		2.5°C/s
Soak time	t_{soak}	2-3 minutes
Time above 217°C	t_1	Max 60 s
Time above 230°C	t_2	Max 50 s
Time above 255°C±5°C	t_3	Min 5 s
Peak temperature in reflow	T_{peak}	255°C (–0/+5°C)
Temperature gradient in cooling		Max -5°C/s

Notes:

1: Reflow soldering profile for solderability testing and soldering heat resistance testing

2: Temperature indicated refers to the PCB surface temperature at soldertail area.

3: Connector can withstand up to 2 reflow cycles with a cool-down to room temperature in-between.

4: Actual reflow profile also depends on equipment, solder paste, PCB thickness, and other components on the board. Please consult your solder paste & reflow equipment manufacturer for their recommendations to adopt a suitable process.

8.0 4-Axis Continuity Test

Detailed information refer to USB Type-C industry standard or its compliance document.

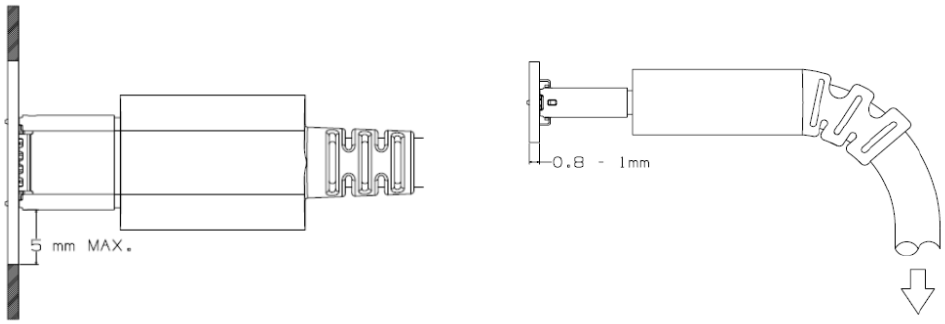

Appendices:

The signal integrity of the mated Connector is normative in the USB type C specification. And Type C compliance document tell that receptacle compliance testing includes dimensional inspection, mechanical, environmental and DC electrical tests but it does not cover signal integrity and shielding effectiveness. A receptacle is considered part of the host/device from signal integrity and shielding effectiveness perspective. So the spec and test group of signal integrity is not shown in this specification.