

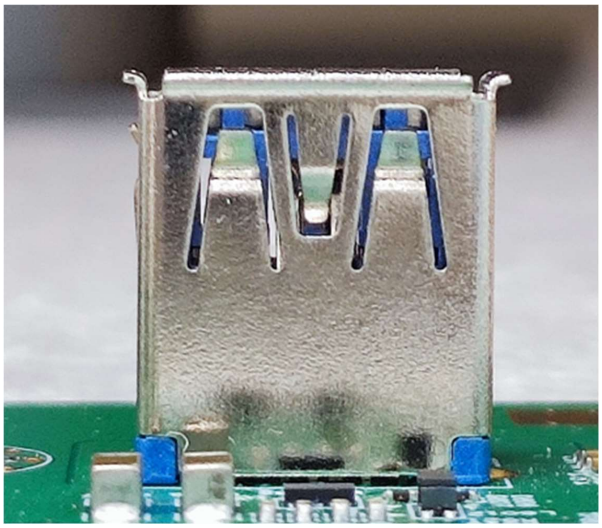

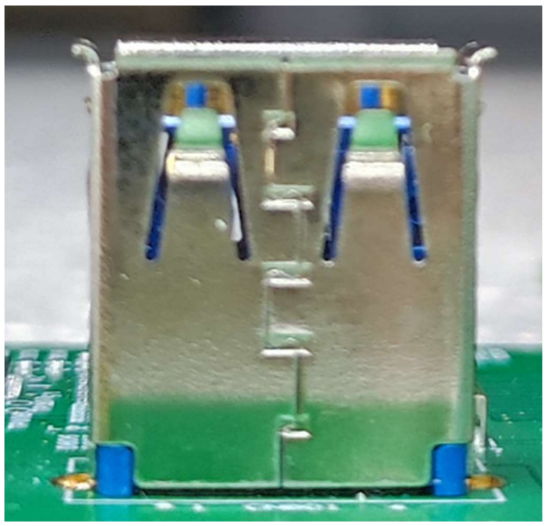

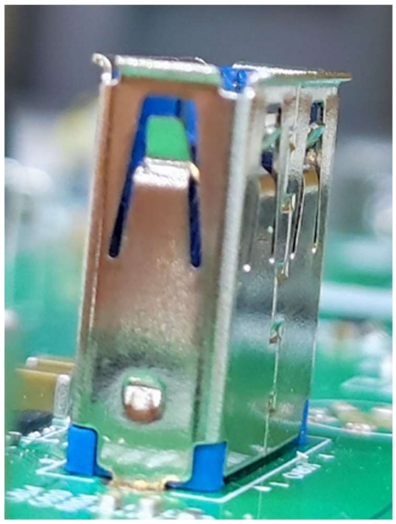

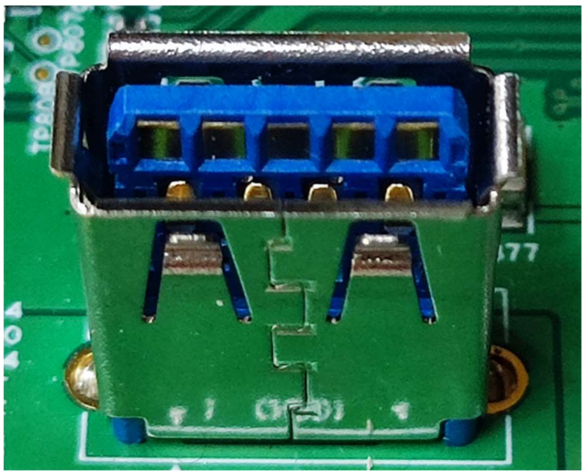

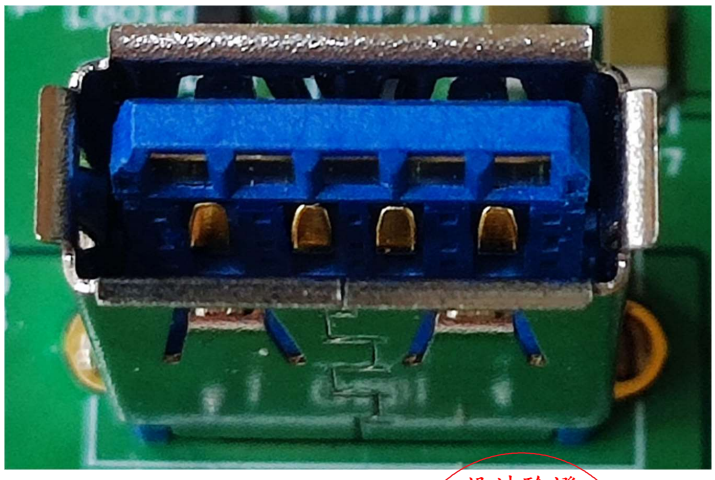



設計驗證
工程課
2024.01.10
發行

FUTURE ELECTRONICS INC. (DISTRIBUTION) PTE LTD. TAIWAN BRANCH
台灣創先電子有限公司

DATE: 2023/12/13

承 認 書
APPROVAL SHEET

客戶名稱 : DIVA Laboratories. Ltd.
鈺緯科技開發股份有限公司

品名 : Global Connector Technology Ltd / USB1086-GF-B

客戶料號 : 3FU00901610 (F0293)

廠商 : FUTURE ELECTRONICS INC. (DISTRIBUTION)

業務工程師 : Ally Chou

承認日期	廠商簽章	客戶承認章
	台北市信義區東興路69號10樓 台灣創先 電子有限公司 TEL:(02)2171-1999	設計驗證 工程課 2024.01.10 發行 鈺緯科技開發股份有限公司

APP

Making the Difference

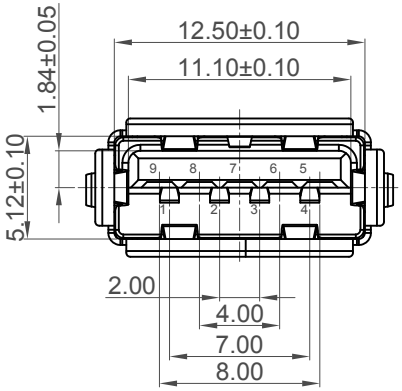

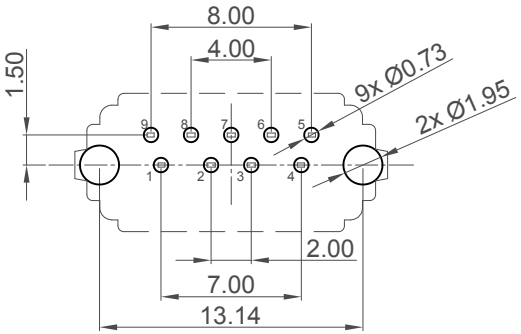

Recommended PCB Layout (Top View)
T=1.6mm (General Tolerances: ±0.05mm)

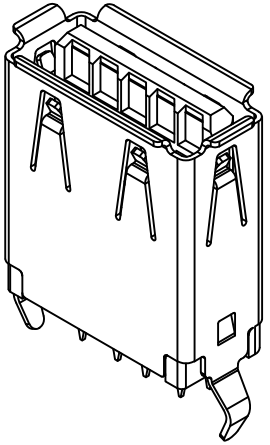

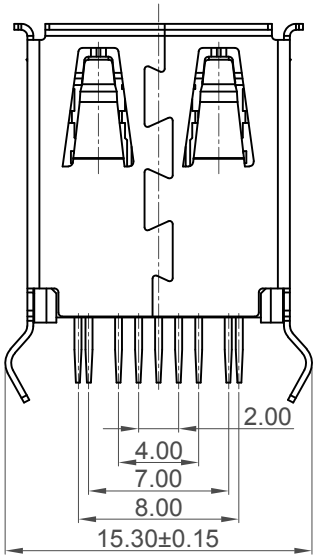

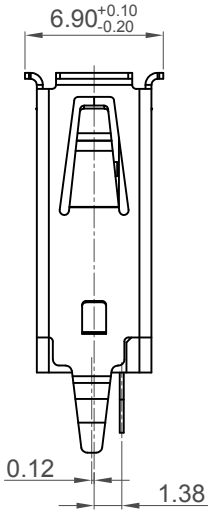

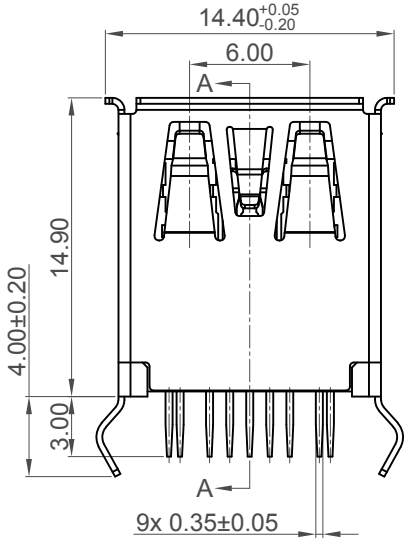

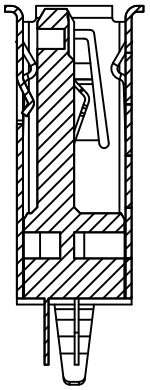

Section A-A

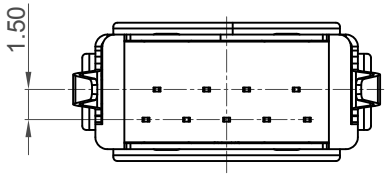

Pin No.	Signal
1	VBUS
2	D-
3	D+
4	GND
5	STDA_SSRX-
6	STDA_SSRX+
7	GND_DRAIN
8	STDA_SSTX-
9	STDA_SSTX+

Ordering Grid

USB1086 — GF — B [Request Samples and Quotation]

Contact Plating
GF = Gold Flash

Packing Options
B = Tray
(100 per tray)

Specifications

Materials & Plating
- Plastic Housing: LCP, Blue, UL94V-0
- Contact Terminal: Copper Alloy,T=0.20mm
- Metallic Shell: SUS201,T=0.30mm

Plating:
- Contact:
  - Contact Area: Gold Flash
  - Solder Tails: 100u" min. Tin
  - Underplating: 50u" min. Nickel
- Shell: 50u" min. Nickel Plating Overall

Electrical:
- Voltage Rating: 30V
- Current Rating: 0.25A (Signal Pins)
  3.0A (Power Pins)
- Operating Temperature: -40°C to +85°C
- Contact Resistance:
  - 30 mΩ max. (Power Pins)
  - 50 mΩ max. (Signal Pins)
- Insulation Resistance: 100 MΩ min.
- Dielectric Withstand Voltage: 100V R.M.S.

Mechanical:
- Mating Force: 35N max.
- Unmating Force: 10N min. Initial
  8N. min. Final
- Durability: 20000 Cycles

3FU00901610(F0293)

設計驗證 工程課 2024.01.10 發行

Part Number: USB1086		Product Description: USB 3.0 Receptacle, Type A,Through Hole, Vertical, Top Mount					
Drawing Date: 06th January 2020							
By	CC	Tolerances (Except as Noted) Length	Angle	Units: Metric (mm)	RoHS COMPLIANT 2011/65/EU Deca-BDE	© This drawing is confidential and copyright of Global Connector Technology, Ltd (GCT). This drawing must not be copied or disclosed without written consent. E & OE	GCT www.gct.co
Detail	Drawing Release	X.X ± 0.35 X.XX ± 0.25	X.° ± 3.0° X.X° ± 1.5°	3rd Angle Projection			
Revision	A2						
Date	08/12/20						
						Not to Scale	Drawn By CC	Sheet No. 1/2

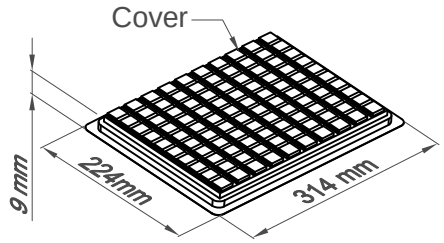

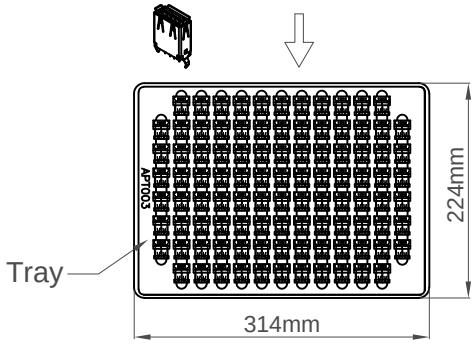

100PCS/tray

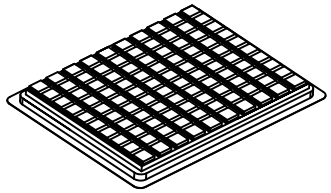

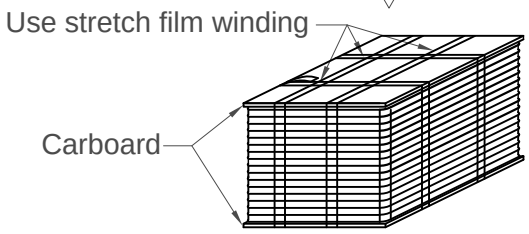

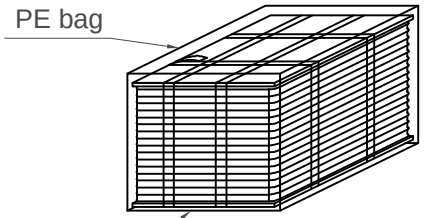

32 Trays/Stack

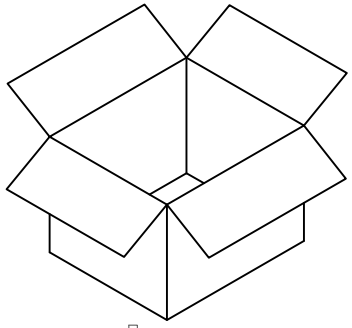

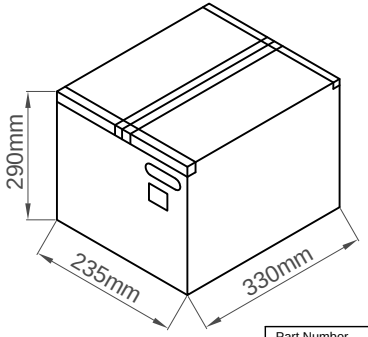

PCS/Tray	Trays/Carton	PCS/Carton
100	32	3200

設計驗證
工程課
2024.01.10
發行
鈺緯科技開發股份有限公司

Part Number	Product Description
USB1086	USB 3.0 Receptacle, Type A,Through Hole, Vertical, Top Mount
Drawing Date	
06th January 2020	

By	CC
Detail	Drawing Release
Revision	A2
Date	08/12/20

Tolerances (Except as Noted): Length X.X ± 0.35, X.XX ± 0.25; Angle X.° ± 3.0°, X.X° ± 1.5°

Units: Metric (mm)

3rd Angle Projection

RoHS COMPLIANT 2011/65/EU Deca-BDE

© This drawing is confidential and copyright of Global Connector Technology, Ltd (GCT). This drawing must not be copied or disclosed without written consent. E & OE

GCT
www.gct.co

Not to Scale	Drawn By CC	Sheet No. 2/2