NuMicro® Family

Arm® Cortex®-M4-based Microcontroller

M480 Series
Datasheet

The information described in this document is the exclusive intellectual property of Nuvoton Technology Corporation and shall not be reproduced without permission from Nuvoton.

Nuvoton is providing this document only for reference purposes of NuMicro® microcontroller and microprocessor based system design. Nuvoton assumes no responsibility for errors or omissions.

All data and specifications are subject to change without notice.

For additional information or questions, please contact: Nuvoton Technology Corporation.

www.nuvoton.com

TABLE OF CONTENTS

1 GENERAL DESCRIPTION 16
2 FEATURES 17
3 PARTS INFORMATION 31
3.1 Package Type 31
3.2 M480 Series Selection Guide 32
3.2.1 M481 Base Series (M481xIDAE) 32
3.2.2 M481 Base Series (M481xGCAE / M481xE8AE) 33
3.2.3 M482 USB FS OTG Series (M482xIDAE) 34
3.2.4 M482 USB FS OTG Series (M482xGCAE / M482xE8AE) 35
3.2.5 M483 CAN Series (M483xIDAE) 36
3.2.6 M483 CAN Series (M483xGCAE / M483xE8AE) 37
3.2.7 M484 USB HS OTG Series 38
3.2.8 M485 Crypto Series 39
3.2.9 M487 Ethernet Series 40
3.3 M480 Selection Code 41
4 PIN CONFIGURATION 42
4.1 Pin Configuration 42
4.1.1 QFN-33 Pin Diagram 42
4.1.2 QFN-48 Pin Diagram 43
4.1.3 LQFP-48 Pin Diagram (0/1 USB FS) 44
4.1.4 LQFP-64 Pin Diagram (0/1 USB FS) 45
4.1.5 LQFP-64 Pin Diagram (0/1 USB FS with V_{BAT}) 46
4.1.6 LQFP-64 Pin Diagram (1 USB HS) 47
4.1.7 LQFP-64 Pin Diagram (USB FS + USB HS) 48
4.1.8 LQFP-128 Pin Diagram (1 USB FS) 49
4.1.9 LQFP-128 Pin Diagram (1 USB FS with V_{BAT}) 50
4.1.10 LQFP-128 Pin Diagram (USB FS + USB HS) 51
4.1.11 LQFP-128 Pin Diagram (USB FS + USB HS) 52
4.1.12 LQFP-144 Pin Diagram 53
4.2 M48xxIDAE Pin Description 54
4.2.1 M481 Series Pin Description 54
4.2.2 M482 Series Pin Description 71
4.2.3 M483 Series Pin Description 100
4.2.4 M484 Series Pin Description 128
4.2.5 M485 Series Pin Description 155
4.2.6 M487 Series Pin Description 183
4.3 M48xxE8AE/M48xxGCAE Pin Description 215
4.3.1 M481 Series Pin Description 215
4.3.2 M482 Series Pin Description 232

4.3.3 M483 Series Pin Description 260
4.4 M487KMCAN Pin Description 288
5 BLOCK DIAGRAM 316
5.1 M480 Block Diagram 316
6 FUNCTIONAL DESCRIPTION 318
6.1 Arm® Cortex®-M4F Core 318
6.2 System Manager 321
6.2.1 Overview 321
6.2.2 System Reset 321
6.2.3 System Power Distribution 327
6.2.4 Power Modes and Wake-up Sources 329
6.2.5 Power Modes and Power Level Transition 334
6.2.6 System Memory Map 335
6.2.7 SRAM Memory Orginization 337
6.2.8 Bus Matrix 340
6.2.9 HIRC Auto Trim 340
6.2.10 Register Lock Control 341
6.2.11 System Timer (SysTick) 343
6.2.12 Nested Vectored Interrupt Controller (NVIC) 344
6.3 Clock Controller 345
6.3.1 Overview 345
6.3.2 Clock Generator 348
6.3.3 System Clock and SysTick Clock 349
6.3.4 Peripherals Clock 351
6.3.5 Power-down Mode Clock 351
6.3.6 Clock Output 351
6.3.7 USB Clock Source 352
6.4 True Random Number Generator (TRNG) 353
6.4.1 Overview 353
6.4.2 Features 353
6.5 Flash Memeory Controller (FMC) 354
6.5.1 Overview 354
6.5.2 Features 354
6.6 General Purpose I/O (GPIO) 356
6.6.1 Overview 356
6.6.2 Features 356
6.7 PDMA Controller (PDMA) 357
6.7.1 Overview 357
6.7.2 Features 357
6.8 Timer Controller (TMR) 358

6.8.1 Overview 358
6.8.2 Features 358
6.9 Watchdog Timer (WDT) 360
6.9.1 Overview 360
6.9.2 Features 360
6.10 Window Watchdog Timer (WWDT) 360
6.10.1 Overview 360
6.10.2 Features 360
6.11 Real Time Clock (RTC) 361
6.11.1 Overview 361
6.11.2 Features 361
6.12 EPWM Generator and Capture Timer (EPWM) 362
6.12.1 Overview 362
6.12.2 Features 362
6.13 Basic PWM Generator and Capture Timer (BPWM) 364
6.13.1 Overview 364
6.13.2 Features 364
6.14 Quadrature Encoder Interface (QEI) 365
6.14.1 Overview 365
6.14.2 Features 365
6.15 Enhanced Input Capture Timer (ECAP) 366
6.15.1 Overview 366
6.15.2 Features 366
6.16 UART Interface Controller (UART) 367
6.16.1 Overview 367
6.16.2 Features 367
6.17 Ethernet MAC Controller (EMAC) 369
6.17.1 Overview 369
6.17.2 Features 369
6.18 Smart Card Host Interface (SC) 370
6.18.1 Overview 370
6.18.2 Features 370
6.19 I²S Controller (I²S) 371
6.19.1 Overview 371
6.19.2 Features 371
6.20 Serial Peripheral Interface (SPI) 372
6.20.1 Overview 372
6.20.2 Features 372
6.21 Quad Serial Peripheral Interface (QSPI) 373

6.21.1 Overview 373
6.21.2 Features 373
6.22 SPI Synchronous Serial Interface Controller (SPI Master mode) 374
6.22.1 Overview 374
6.22.2 Features 374
6.23 I²C Serial Interface Controller (I²C) 375
6.23.1 Overview 375
6.23.2 Features 375
6.24 USCI - Universal Serial Control Interface Controller (USCI) 376
6.24.1 Overview 376
6.24.2 Features 376
6.25 USCI – UART Mode 376
6.25.1 Overview 376
6.25.2 Features 376
6.26 USCI - SPI Mode 377
6.26.1 Overview 377
6.26.2 Features 378
6.27 USCI - I²C Mode 379
6.27.1 Overview 379
6.27.2 Features 379
6.28 Controller Area Network (CAN) 380
6.28.1 Overview 380
6.28.2 Features 380
6.29 Secure Digital Host Controller (SDH) 381
6.29.1 Overview 381
6.29.2 Features 381
6.30 External Bus Interface (EBI) 382
6.30.1 Overview 382
6.30.2 Features 382
6.31 USB 1.1 Device Controller (USBD) 383
6.31.1 Overview 383
6.31.2 Features 383
6.32 High Speed USB 2.0 Device Controller (HSUSBD) 384
6.32.1 Overview 384
6.32.2 Features 384
6.33 USB 1.1 Host Controller (USBH) 385
6.33.1 Overview 385
6.33.2 Features 385
6.34 USB 2.0 Host Controller (USBH) 386

6.34.1 Overview 386
6.34.2 Features 386
6.35 USB On-The-Go (OTG) 387
6.35.1 Overview 387
6.35.2 Features 387
6.36 High Speed USB On-The-Go (HSOTG) 388
6.36.1 Overview 388
6.36.2 Features 388
6.37 CRC Controller (CRC) 389
6.37.1 Overview 389
6.37.2 Features 389
6.38 Cryptographic Accelerator (CRYPTO) 390
6.38.1 Overview 390
6.38.2 Features 390
6.39 Camera Capture Interface Controller (CCAP) 392
6.39.1 Overview 392
6.39.2 Features 392
6.40 Enhanced 12-bit Analog-to-Digital Converter (EADC) 393
6.40.1 Overview 393
6.40.2 Features 393
6.41 Digital to Analog Converter (DAC) 395
6.41.1 Overview 395
6.41.2 Features 395
6.42 Analog Comparator Controller (ACMP) 396
6.42.1 Overview 396
6.42.2 Features 396
6.43 OP Amplifier (OPA) 397
6.43.1 Overview 397
6.43.2 Features 397
6.44 Peripherals Interconnection 398
6.44.1 Overview 398
6.44.2 Peripherals Interconnect Matrix Table 398
6.44.3 Functional Description 398
7 APPLICATION CIRCUIT 402
7.1 Power Supply Scheme with External V_{REF} 402
7.2 Power Supply Scheme with Internal V_{REF} 403
7.3 Power Supply Scheme with V_{REF} and External RTC with Battery Power 404
7.4 Power Supply Scheme with V_{REF} and Internal RTC with Battery Power 405
7.5 Peripheral Application Scheme 406

8 ELECTRICAL CHARACTERISTICS FOR M48XID/M487KMCAN 407
8.1 Absolute Maximum Ratings 407
8.1.1 Voltage Characteristics 407
8.1.2 Current Characteristics 407
8.1.3 Thermal Characteristics 408
8.1.4 EMC Characteristics 408
8.1.5 Package Moisture Sensitivity(MSL) 411
8.1.6 Soldering Profile 412
8.2 General Operating Conditions 413
8.3 DC Electrical Characteristics 414
8.3.1 Typical Current Consumption(M48xID) 414
8.3.2 Typical Current Consumption(M487KMCAN) 422
8.3.3 On-chip Peripheral Current Consumption 428
8.3.4 Wakeup Time 430
8.3.5 PIN DC Characteristics 431
8.4 AC Electrical Characteristics 433
8.4.1 External 4~24 MHz High Speed Crystal (HXT) Characteristics 433
8.4.2 External 4~24 MHz High Speed Clock Input (OSC) Characteristics 435
8.4.3 External 32.768 kHz Low Speed Crystal (LXT) Characteristics 435
8.4.4 External 32.768 kHz Low Speed Clock Input (OSC) Characteristics 436
8.4.5 12 MHz Internal High Speed RC Oscillator (HIRC) 437
8.4.6 10 kHz Internal Low Speed RC Oscillator (LIRC) 437
8.4.7 PLL Characteristics 437
8.4.8 PIN AC Characteristics 438
8.5 Analog Electrical Characteristics 439
8.5.1 LDO 439
8.5.2 Low-Voltage Reset 439
8.5.3 Brown-out Detector 440
8.5.4 Power-on Reset 440
8.5.5 Internal Voltage Reference 441
8.5.6 12-bit ADC 442
8.5.7 Temperature Sensor 445
8.5.8 Digital to Analog Converter (DAC) 446
8.5.9 Analog Comparator Controller (ACMP) 448
8.5.10 OP Amplifier (OPA) 449
8.6 Flash DC Electrical Characteristic 450
8.7 I²C Dynamic Characteristics 451
8.8 SPI Dynamic Characteristics 452
8.9 I²S Dynamic Characteristics 455
8.10 USCI - I²C Dynamic Characteristics 457

8.11 USCI - SPI Dynamic Characteristics 458
8.12 USB Characteristics 461
8.12.1 USB Full-Speed 461
8.12.2 USB Full-Speed PHY Characteristics 461
8.12.3 USB High-Speed Characteristics 461
8.13 Ethernet Characteristics 463
8.13.1 RMII Interface Timing 463
8.13.2 Ethernet PHY Management Interface Timing 464
8.14 SDIO Characteristics 465
8.14.1 Default Mode Timing 465
8.14.2 SDIO Dynamic Characteristics 466
8.15 EBI Characteristics 467
8.15.1 EBI Timing 467
8.16 SPI Flash Characteristics (M487KMCAN) 468
9 ELECTRICAL CHARACTERISTICS FOR M48XGC/M48XE8 469
9.1 Absolute Maximum Ratings 469
9.1.1 Voltage Characteristics 469
9.1.2 Current Characteristics 470
9.1.3 Thermal Characteristics 471
9.1.4 EMC Characteristics 472
9.1.5 Package Moisture Sensitivity(MSL) 473
9.1.6 Soldering Profile 474
9.2 General Operating Conditions 475
9.3 DC Electrical Characteristics 476
9.3.1 Supply Current Characteristics 476
9.3.2 On-Chip Peripheral Current Consumption 480
9.3.3 Wakeup Time from Low-Power Modes 482
9.3.4 I/O Current Injection Characteristics 483
9.3.5 I/O DC Characteristics 483
9.4 AC Electrical Characteristics 485
9.4.1 48 MHz Internal High Speed RC Oscillator (HIRC48M) 485
9.4.2 12 MHz Internal High Speed RC Oscillator (HIRC) 486
9.4.3 10 kHz Internal Low Speed RC Oscillator (LIRC) 487
9.4.4 External 4~24 MHz High Speed Crystal/Ceramic Resonator (HXT) Characteristics 488
9.4.5 External 4~24 MHz High Speed Clock Input Signal Characteristics 490
9.4.6 External 32.768 kHz Low Speed Crystal/Ceramic Resonator (LXT) Characteristics 491
9.4.7 External 32.768 kHz Low Speed Clock Input Signal Characteristics 492
9.4.8 PLL Characteristics 493

9.4.9 I/O AC Characteristics 494
9.5 Analog Characteristics 497
9.5.1 LDO 497
9.5.2 Reset and Power Control Block Characteristics 498
9.5.3 12-bit SAR ADC 500
9.5.4 Temperature Sensor 505
9.5.5 Analog Comparator Controller (ACMP) 506
9.5.6 Digital to Analog Converter (DAC) 507
9.5.7 Internal Voltage Reference 509
9.6 Communications Characteristics 510
9.6.1 SPI Dynamic Characteristics 510
9.6.2 SPI - I²S Dynamic Characteristics 513
9.6.3 I²S Dynamic Characteristics 515
9.6.4 I²C Dynamic Characteristics 517
9.6.5 USB Characteristics 518
9.6.6 SDIO Characteristics 519
9.6.7 EBI Characteristics 521
9.6.8 Camera Capture Interface (CCAP) Characteristics 522
9.7 Flash DC Electrical Characteristics 523
10 ABBREVIATIONS 524
10.1 Abbreviations 524
11 PACKAGE DIMENSIONS 526
11.1 QFN 33L (5x5x0.8 mm Pitch 0.5 mm) 526
11.2 QFN48L (5x5x0.8 mm Pitch 0.35 mm) 527
11.3 LQFP 48L (7x7x1.4 mm Footprint 2.0mm) 528
11.4 LQFP 64L (7x7x1.4 mm footprint 2.0 mm) 529
11.5 LQFP 128L (14x14x1.4 mm footprint 2.0 mm) 530
11.6 LQFP 144L (20x20x1.4 mm footprint 2.0 mm) 531
12 REVISION HISTORY 532

LIST OF FIGURES

Figure 4.1-1 QFN-33 Pin Diagram (0/1 USB FS) 42
Figure 4.1-2 QFN-48 Pin Diagram 43
Figure 4.1-3 LQFP-48 Pin Diagram (0/1 USB FS) 44
Figure 4.1-4 LQFP-64 Pin Diagram (0/1 USB FS) 45
Figure 4.1-5 LQFP-64 Pin Diagram (0/1 USB FS with V_{BAT}) 46
Figure 4.1-6 LQFP-64 Pin Diagram (1 USB HS) 47
Figure 4.1-7 LQFP-64 Pin Diagram (USB FS + USB HS) 48
Figure 4.1-8 LQFP-128 Pin Diagram (1 USB FS) 49
Figure 4.1-9 LQFP-128 Pin Diagram (1 USB FS) 50
Figure 4.1-10 LQFP-128 Pin Diagram (USB FS + USB HS) 51
Figure 4.1-11 LQFP-128 Pin Diagram (USB FS + USB HS) 52
Figure 4.1-12 LQFP-144 Pin Diagram 53
Figure 5.1-1 NuMicro® M480 Block Diagram (M48xID) 316
Figure 5.1-2 NuMicro® M480 Block Diagram (M487KMCAN) 316
Figure 5.1-3 NuMicro® M480 Block Diagram (M48xGC) 317
Figure 5.1-4 NuMicro® M480 Block Diagram (M48xE8) 317
Figure 6.1-1 Cortex®-M4F Block Diagram 318
Figure 6.2-1 System Reset Sources 322
Figure 6.2-2 nRESET Reset Waveform 324
Figure 6.2-3 Power-on Reset (POR) Waveform 324
Figure 6.2-4 Low Voltage Reset (LVR) Waveform 325
Figure 6.2-5 Brown-out Detector (BOD) Waveform 326
Figure 6.2-6 NuMicro® M480 Power Distribution Diagram 327
Figure 6.2-7 Power Mode State Machine 331
Figure 6.2-8 NuMicro® M480 Power Distribution Diagram 334
Figure 6.2-9 SRAM Block Diagram 338
Figure 6.2-10 SRAM Memory Organization 339
Figure 6.2-11 NuMicro® M480 Bus Matrix Diagram 340
Figure 6.3-1 Clock Generator Global View Diagram (M48xID/M487KMCAN) 346
Figure 6.3-2 Clock Generator Global View Diagram (M48xGC/M48xE8) 347
Figure 6.3-3 Clock Generator Block Diagram 348
Figure 6.3-4 System Clock Block Diagrams 349
Figure 6.3-5 HXT Stop Protect Procedure 350
Figure 6.3-6 SysTick Clock Control Block Diagram 350
Figure 6.3-7 Clock Output Block Diagram 351
Figure 6.3-8 USB Clock Source (M48xID/M487KMCAN) 352

Figure 6.3-9 USB Clock Source (M48xGC/M48xE8) 352
Figure 6.26-1 SPI Master Mode Application Block Diagram 377
Figure 6.26-2 SPI Slave Mode Application Block Diagram 377
Figure 6.27-1 I²C Bus Timing 379
Figure 8.1-1 Soldering Profile From J-STD-020C 412
Figure 8.3-1 Current Consumption Versus Temperature in Normal Run Mode, V_{DD} = 3.3V , All Peripherals Disabled, PLL Source From HIRC 415
Figure 8.3-2 Current Consumption Versus Temperature in Normal Run Mode, V_{DD} = 3.3V , All Peripherals Enabled, PLL Source From HIRC 415
Figure 8.3-3 Current Consumption Versus Temperature in Normal Run Mode, V_{DD} = 3.3V , All Peripherals Disabled, PLL Source From HXT 416
Figure 8.3-4 Current Consumption Versus Temperature in Normal Run Mode, V_{DD} = 3.3V , All Peripherals Enabled, PLL Source From HXT 416
Figure 8.3-5 Current Consumption Versus Temperature in Idle Mode, V_{DD} = 3.3V , All Peripherals Disabled, PLL Source From HIRC 418
Figure 8.3-6 Current Consumption Versus Temperature in Idle Mode, V_{DD} = 3.3V , All Peripherals Enabled, PLL Source From HIRC 418
Figure 8.3-7 Current Consumption Versus Temperature in Idle Mode, V_{DD} = 3.3V , All Peripherals Disabled, PLL Source From HXT 419
Figure 8.3-8 Current Consumption Versus Temperature in Idle Mode, V_{DD} = 3.3V , All Peripherals Enabled, PLL Source From HXT 419
Figure 8.4-1 Typical Crystal Application Circuit 434
Figure 8.4-2 Typical Crystal Application Circuit 436
Figure 8.5-1 Power-up Ramp Condition 441
Figure 8.5-2 Typical Connection with Internal Voltage Reference 442
Figure 8.7-1 I²C Timing Diagram 451
Figure 8.8-1 SPI Master Mode Timing Diagram 452
Figure 8.8-2 SPI Slave Mode Timing Diagram 454
Figure 8.9-1 I²S Master Mode Timing Diagram 455
Figure 8.9-2 I²S Slave Mode Timing Diagram 456
Figure 8.10-1 I²C Timing Diagram 457
Figure 8.11-1 SPI Master Mode Timing Diagram 458
Figure 8.11-2 SPI Slave Mode Timing Diagram 460
Figure 8.13-1 RMII Interface Timing Diagram 463
Figure 8.13-2 Ethernet PHY Management Interface Timing Diagram 464
Figure 8.14-1 SDIO Default Mode 465
Figure 8.14-2 SDIO High-speed Mode 466
Figure 8.15-1 External Bus Interface Timing Diagram 467
Figure 9.1-1 Soldering Profile From J-STD-020C 474
Figure 9.4-1 Typical Crystal Application Circuit 489

Figure 9.4-2 Typical 32.768 kHz Crystal Application Circuit 491
Figure 9.5-1 Power Ramp Up/Down Condition 499
Figure 9.5-2 Typical Connection with Internal Voltage Reference 509
Figure 9.6-1 SPI Master Mode Timing Diagram 510
Figure 9.6-2 SPI Slave Mode Timing Diagram 512
Figure 9.6-3 I²S Master Mode Timing Diagram 513
Figure 9.6-4 I²S Slave Mode Timing Diagram 514
Figure 9.6-5 I²S Master Mode Timing Diagram 515
Figure 9.6-6 I²S Slave Mode Timing Diagram 516
Figure 9.6-7 I²C Timing Diagram 517
Figure 9.6-8 SDIO Default Mode 519
Figure 9.6-9 SDIO High-speed Mode 520
Figure 9.6-10 External Bus Interface Timing Diagram 521
Figure 9.6-11 Camera Capture Interface Timing Diagram 522

List of Tables

Table 6.2-1 Reset Value of Registers 323
Table 6.2-2 Power Mode Table 329
Table 6.2-3 Power Mode Difference Table 330
Table 6.2-4 Power Mode Definition Table 330
Table 6.2-5 Clocks in Power Modes 331
Table 6.2-6 Re-Entering Power-down Mode Condition 334
Table 6.2-7 Address Space Assignments for On-Chip Controllers 337
Table 6.2-8 SRAM Organization 338
Table 6.5-1 FMC Features Comparison Table at Different Chip 355
Table 6.13-1 BPWM Features Comparison Table 364
Table 6.16-1 M480 Series UART Features 368
Table 6.29-1 SDH Features Comparison Table 381
Table 6.38-1 Crypto Features Comparison Table at Different Chip 391
Table 6.40-1 EADC Features Comparison Table 394
Table 6.44-1 Peripherals Interconnect Matrix table 398
Table 8.1-1 Voltage Characteristics 407
Table 8.1-2 Current Characteristics 407
Table 8.1-3 Thermal Characteristics 408
Table 8.1-4 EMS Characteristics 410
Table 8.1-5 ESD Characteristics 410
Table 8.1-6 Electrical Characteristics 410
Table 8.3-1 Current Consumption in Normal Run Mode 414
Table 8.3-2 Current Consumption in Idle Mode 417
Table 8.3-3 Chip Current Consumption in Power-down Mode 421
Table 8.3-4 Current Consumption in Normal Run Mode (Cache-on) 422
Table 8.3-5 Current Consumption in Normal Run Mode (Cache-off) 423
Table 8.3-6 Current Consumption in Idle Mode (Cache-on) 424
Table 8.3-7 Current Consumption in Idle Mode (Cache-off) 425
Table 8.3-8 Chip Current Consumption in Power-down Mode 427
Table 8.3-9 Low-power Mode Wakeup Timings 430
Table 8.3-10 PIN Input Characteristics 431
Table 8.3-11 PIN Output Characteristics 431
Table 8.3-12 nRESET PIN Characteristics 432
Table 8.4-1 External 4~24 MHz High Speed Crystal (HXT) Oscillator 434
Table 8.4-2 External 32.768 kHz Crystal 435
Table 8.4-3 I/O AC Characteristics 438

Table 9.1-1 Voltage Characteristics 469
Table 9.1-2 Current Characteristics 470
Table 9.1-3 Thermal Characteristics 471
Table 9.1-4 EMS Characteristics 472
Table 9.1-5 ESD Characteristics 472
Table 9.1-6 Electrical Characteristics 472
Table 9.1-7 Package Moisture Sensitivity(MSL) 473
Table 9.1-8 Soldering Profile 474
Table 9.2-1 General Operating Conditions 475
Table 9.3-1 Current Consumption in Normal Run Mode 476
Table 9.3-2 Current Consumption in Idle Mode 477
Table 9.3-3 Chip Current Consumption in Power-down Mode 479
Table 9.3-4 Peripheral Current Consumption 481
Table 9.3-5 Low-power Mode Wake-up Timings 482
Table 9.3-6 I/O Current Injection Characteristics 483
Table 9.3-7 I/O Input Characteristics 483
Table 9.3-8 I/O Output Characteristics 484
Table 9.3-9 nRESET Input Characteristics 484
Table 9.4-148 MHz Internal High Speed RC Oscillator(HIRC) Characteristics 485
Table 9.4-2 12 MHz Internal High Speed RC Oscillator(HIRC) Characteristics 486
Table 9.4-3 10 kHz Internal Low Speed RC Oscillator(LIRC) Characteristics 487
Table 9.4-4 External 4~24 MHz High Speed Crystal (HXT) Oscillator 488
Table 9.4-5 External 4~24 MHz High Speed Crystal Characteristics 489
Table 9.4-6 External 4~24 MHz High Speed Clock Input Signal 490
Table 9.4-7 External 32.768 kHz Low Speed Crystal (LXT) Oscillator 491
Table 9.4-8 External 32.768 kHz Low Speed Crystal Characteristics 491
Table 9.4-9 External 32.768 kHz Low Speed Clock Input Signal 492
Table 9.4-10 PLL Characteristics 493
Table 9.4-11 I/O AC Characteristics 496
Table 9.5-1 Reset and Power Control Unit 499
Table 9.5-2 ACMP Characteristics 506
Table 9.6-1 SPI Master Mode Characteristics 510
Table 9.6-2 SPI Slave Mode Characteristics 511
Table 9.6-3 I^2S Characteristics 513
Table 9.6-4 I^2S Characteristics 515
Table 9.6-5 I^2C Characteristics 517
Table 9.6-6 USB Full-Speed Characteristics 518

Table 9.6-7 USB Full-Speed PHY Characteristics 518
Table 9.6-8 SDIO Default Mode Timing 519
Table 9.6-9 SDIO Dynamic Characteristics 520
Table 9.6-10 Camera Capture Interface Timing 522
Table 10.1-1 List of Abbreviations 525

1 GENERAL DESCRIPTION

The NuMicro® M480 series microcontroller is embedded with Arm® Cortex®-M4F core with hardware cryptography which supports DSP instruction and integrated floating-point unit. The M480 series consists of six sub-series according to characteristics and applications. The M480 series supports Flash size up to 2560 KB and SRAM size up to 160 KB. The operating frequency is up to 192 MHz with 175/130 µA/ MHz dynamic power consumption and the standby current can be lower to 1 µA.

The M480 series supports secure boot functionality, which provides a constant digital signature of system software for identification during boot up to protect the integrity of Flash content from attack. The embedded hardware cryptography engine provides fast and easy encryption, decryption, ID certification, private key and public key features. Additionally, the M480 series supports 10/100Mbps Ethernet RMII, high-speed USB 2.0 OTG, dual 12-bit 5 MSPS SAR ADC, camera interface and versatile peripherals, eligible for IoT, industrial automation, sensor network, automotive device, RC aircraft, smart home, network gateway and consumer electronics.

The NuMicro® M480 series consists of six sub-series:

- NuMicro® M481 Base series: high performance, low power consumption, versatile high speed UART/SPI/I2C/PWM peripherals, eligible for data collector.
- NuMicro® M482 USB FS OTG series: Integrated USB 2.0 full speed interface with on-chip OTG PHY, eligible for gaming or PC accessories.
- NuMicro® M483 CAN series: Integrated 2 or 3 sets of CAN 2.0B interfaces, 2 sets of USB 2.0 interfaces, dual ADC and up to 9 sets of UART interfaces, eligible for IoV and industrial control
- NuMicro® M484 USB HS OTG series: Integrated 2 sets of USB 2.0 interface with op-chip full speed and high-speed OTG PHY, eligible for data concentrator of USB sensor.
- NuMicro® M485 Crypto series: Integrated hardware cryptography engine and random number generator for randomly fabricating the key for data encryption/decryption and certification, eligible for fingerprint module, smart payment and secure USB device.
- NuMicro® M487 Ethernet series: Integrated 10/100Mbps Ethernet MAC with industrial standard RMII interface for quickly implementing the network connection, eligible for industrial IoT gateway, UART-to-Ethernet converter, industrial automation, smart home, etc.

Series	USB Full Speed	USB High Speed	CAN 2.0B	Cryptography	Ethernet
M481					
M482	√				
M483	√	√	√	√	
M484	√	√			
M485	√	√		√	
M487	√	√	√	√	√

2 FEATURES

Core and System	
Arm® Cortex®-M4F	• Arm® Cortex®-M4F core, running up to 192 MHz • Built-in Memory Protection Unit (MPU) • Built-in Nested Vectored Interrupt Controller (NVIC) • Hardware IEEE 754 compliant Floating-point Unit (FPU) • DSP extension with hardware divider and single-cycle 32-bit hardware multiplier • 24-bit system tick timer • Programmble and maskable interrupt • Low Power Sleep mode by WFI and WFE instructions
Brown-out Detector (BOD)	• Eight-level BOD with brown-out interrupt and reset option. (3.0V/2.8V/2.6V/2.4V/2.2V/2.0V/1.8V/1.6V)
Low Voltage Reset (LVR)	• LVR with 1.5V threshold voltage level.
Security	• 96-bit Unique ID (UID). • 128-bit Unique Customer ID (UCID). • One built-in temperature sensor with 1°C resolution.
Memories	
Boot Loader (M48xGC/M48xE8)	• Factory pre-loaded 8 KB mask ROM for secure boot procedure • Uses ECC to validate data in APROM, LDROM and external SPI Flash
Flash	• Dual bank 512/256 KB on-chip Application ROM (APROM) for Over-The-Air (OTA) upgrade. (M48xID) • Dual bank 512 KB on-chip Application ROM (APROM) for Over-The-Air (OTA) upgrade. (M487KMCAN) • Single bank 256/128 KB on-chip Application ROM (APROM). (M48xGC/M48xE8) • Four eXecute-Only-Memory regions for data protection. (M48xGC/M48xE8) • 192 MHz maximum frequency, with performance at zero wait cycle in continuous address read access • 4 KB on-chip Flash for user-defined loader (LDROM) • 8 KB non-readble Key Protection ROM (KPROM) for firmware programming protection • 4 KB non-readble Security Protection ROM (SPROM) for intelectual property protection • 3 KB One Time Programable (OTP) ROM for data security.

	(M48xID/M487KMCAN) • 2 KB One Time Programable (OTP) ROM for data security. (M48xGC/M48xE8) • All on-chip Flash support 4 KB page erase • Fast Flash programming verification with CRC • On-chip Flash programming with In-Chip Programming (ICP), In-System Programming (ISP) and In-Application Programming (IAP) capabilities • Configurable boot up sources including boot loader, user-defined loader (LDROM) or Application ROM (APROM) • Data Flash with configurable memory size • 2-wired ICP Flash updating through SWD interface • 32-bit/64-bit and multi-word Flash programming function
SRAM	• Up to 160 KB on-chip SRAM includes: (M48xID/ M487KMCAN) – 32 KB SRAM located in bank 0 that supports hardware parity check and retenion mode; Exception (NMI) generated upon a parity check error – 96/32 KB SRAM located in bank 1 – 32 KB SRAM located in bank 2 that can be used as cache for external SPI Flash memory • Up to 128/64 KB on-chip SRAM includes: (M48xGC/M48xE8) – 32 KB SRAM located in bank 0 that supports hardware parity check and retenion mode; Exception (NMI) generated upon a parity check error – 96/32 KB SRAM located in bank 1 • Byte-, half-word- and word-access • PDMA operation
Cyclic Redundancy Calculation (CRC)	• Supports CRC-CCITT, CRC-8, CRC-16 and CRC-32 polynomials • Programmable initial value and seed value • Programmable order reverse setting and one's complement setting for input data and CRC checksum • 8-bit, 16-bit, and 32-bit data width • 8-bit write mode with 1-AHB clock cycle operation • 16-bit write mode with 2-AHB clock cycle operation • 32-bit write mode with 4-AHB clock cycle operation • Uses DMA to write data with performing CRC operation
Peripheral DMA (PDMA)	• 16 independent and configurable channels for automatic data transfer between memories and peripherals • Basic and Scatter-Gather transfer modes • Each channel supports circular buffer management using Scatter-Gather Transfer mode • Stride function for rectangle image data movement

	• Fixed-priority and Round-robin priorities modes • Single and burst transfer types • Byte-, half-word- and word tranfer unit with count up to 65536 • Incremental or fixed source and destination address
Clocks	
External Clock Source	• 4~24 MHz High-speed eXternal crystal oscillator (HXT) for precise timing operation • 32.7688 kHz Low-speed eXternal crystal oscillator (LXT) for RTC function and low-power system operation • Supports clock failure detection for external crystal oscillators and exception generatation (NMI)
Internal Clock Source	• 48 MHz High-speed Internal RC oscillator (HIRC48M) dedicated for crystal-less USB. (M48xGC/M48xE8) • 12 MHz High-speed Internal RC oscillator (HIRC) trimmed to 2% accuracy that can optionally be used as a system clock • 10 kHz Low-speed Internal RC oscillator (LIRC) for watchdog timer and wakeup operation • Up to 480 MHz on-chip PLL, sourced from HIRC or HXT, allows CPU operation up to the maximum CPU frequency without the need for a high-frequency crystal
Real-Time Clock (RTC)	• Real-Time Clock with a separate power domain and independent V_{BAT} pin. (M48xGC/M48xE8) • The RTC clock source includes Low-speed external crystal oscillator (LXT) • The RTC block includes 80 bytes of battery-powered backup registers, which can be cleared by tamper pins. (M48xID/M487KMCAN) • The RTC block includes 20 bytes of battery-powered backup registers, which can be cleared by tamper pins. (M48xGC/M48xE8) • Supports 6 static and dynamic tamper pins • Able to wake up CPU from any reduced power mode • Supports ±5ppm within 5 seconds software clock accuracy compensation • Supports Alarm registers (second, minute, hour, day, month, year) • Supports RTC Time Tick and Alarm Match interrupt • Automatic leap year recognition • Supports 1 Hz clock output for calibration
Timers	
32-bit Timer	**TIMER** • Four sets of 32-bit timers with 24-bit up counter and one 8-bit

	pre-scale counter from independent clock source • One-shot, Periodic, Toggle and Continuous Counting operation modes • Supports event counting function to count the event from external pins • Supports external capture pin for interval measurement and resetting 24-bit up counter • Supports chip wake-up function, if a timer interrupt signal is generated **PWM** • Eight 16-bit PWM counters with 12-bit clock prescale • Supports 12-bit deadband (dead time) • Up, down or up-down PWM counter type • Supports brake function • Supports mask function and tri-state output for each PWM channel
Enhanced PWM (EPWM)	• Twelve 16-bit counters with 12-bit clock prescale for twelve 192 MHz PWM output channels • Up to 12 independent input capture channels with 16-bit resolution counter • Supports dead time with maximum divided 12-bit prescale • Up, down or up-down PWM counter type • Supports complementary mode for 3 complementary paired PWM output channels • Synchronous function for phase control • Counter synchronous start function • Brake function with auto recovery mechanism • Mask function and tri-state output for each PWM channel • Trigger EADC or DAC to start conversion immediately. • Trigger EADC to start conversion after a short delay. (M48xGC/M48xE8) • Hardware short-circuit output check. (M48xGC/M48xE8)
Basic PWM (BPWM)	• Two 16-bit counters with 12-bit clock prescale for twelve 192 MHz PWM output channels. • Up to 6 independent input capture channels with 16-bit resolution counter • Up, down or up-down PWM counter type • Counter synchronous start function • Mask function and tri-state output for each PWM channel • Able to trigger EADC to start conversion.
Watchdog	• 18-bit free running up counter for WDT time-out interval • Supports multiple clock sources from LIRC (default selection),

	HCLK/2048 and LXT with 8 selectable time-out period • Able to wake up system from Power-down or Idle mode • Time-out event to trigger interrupt or reset system • Supports four WDT reset delay periods, including 1026, 130, 18 or 3 WDT_CLK reset delay period • Configured to force WDT enabled on chip power-on or reset.
Window Watchdog	• Clock sourced from HCLK/2048 or LIRC; the window set by 6-bit counter with 11-bit prescale • Suspended in Idle/Power-down mode
Analog Interfaces	
Enhanced Analog-to-Digital Converter (EADC) **(M48xID/M487KMCAN)**	• One 12-bit, 19-ch 5 MSPS SAR EADC with up to 16 single-ended input channels or 8 differential input pairs; 10-bit accuracy is guaranteed. • Three internal channels for V_{BAT}, band-gap VBG input and Temperature sensor input • Supports external V_{REF} pin or internal reference voltage V_{REF}: 1.6V, 2.0V, 2.5V, and 3.0V. • Two power saving modes: Power-down mode and Standby mode • Supports calibration capability. • Analog-to-Digital conversion can be triggered by software enable, external pin, Timer 0~3 overflow pulse trigger or PWM trigger. • Configurable EADC sampling time. • Double data buffers for sample module 0~3. • PDMA operation.
Enhanced Analog-to-Digital Converter (EADC) **(M48xGC/M48xE8)**	• One 12-bit, 19-ch 5 MSPS SAR EADC with up to 16 single-ended input channels or 8 differential input pairs; 10-bit accuracy is guaranteed. • One 12-bit, 16-ch 5 MSPS SAR EADC with up to 16 single-ended input channels or 8 differential input pairs; 10-bit accuracy is guaranteed. • Three internal channels for V_{BAT}, band-gap VBG input and Temperature sensor input • Supports external V_{REF} pin or internal reference voltage V_{REF}: 1.6V, 2.0V, 2.5V, and 3.0V. • Two power saving modes: Power-down mode and Standby mode • Supports calibration capability. • Analog-to-Digital conversion can be triggered by software enable, external pin, Timer 0~3 overflow pulse trigger or PWM trigger. • Configurable EADC sampling time. • Double data buffers for sample module 0~3.

	• Supports simultaneously trigger mode. • PDMA operation.
Digital-to-Analog Converter (DAC)	• 12-bit, 1 MSPS voltage type DAC with 8-bit mode and 8μs rail-to-rail settle time. • Maximum output voltage AV_{DD} -0.2V at buffer mode • Digital-to-Analog conversion triggered by Timer0~3, EPWM0, EPWM1, external trigger pin to start DAC conversion or software. • Supports group mode for synchronized data update of two DACs. (M48xID/M487KMCAN) • PDMA operation
Analog Comparator (ACMP)	• Two rail-to-rail Analog Comparators. • Supports four multiplexed I/O pins at positive input. • Supports I/O pins, band-gap, DAC, and 16-level Voltage divider from AV_{DD} or V_{REF} at negative input • Supports four programmable propagation speeds for power saving • Supports wake up from Power-down by interrput • Supports triggers for brake events and cycle-by-cycle control for PWM • Supports window compare mode and window latch mode. • Supports programmable hysteresis window: 0mV, 10mV, 20mV and 30mV
Operational Amplifier (OPA) **(M48xID/M487KMCAN)**	• Three Operational Amplifiers with 0~AV_{DD} input voltage range. • OPA schmitt trigger buffer output used as the interrupt source of comparator.
Communication Interfaces	
Low-power UART	• Low-power UARTs with up to 17.45 MHz baud rate. • Auto-Baud Rate measurement and baud rate compensation function. • Supports low power UART (LPUART): baud rate clock from LXT(32.768 kHz) with 9600bps in Power-down mode even system clock is stopped. • 16-byte FIFOs with programmable level trigger • Auto flow control (nCTS and nRTS) • Supports IrDA (SIR) function • Supports LIN function on UART0 and UART1 • Supports RS-485 9-bit mode and direction control • Supports nCTS, incoming data, Received Data FIFO reached threshold and RS-485 Address Match (AAD mode) wake-up function in idle mode. • Supports hardware or software enables to program nRTS pin to

	control RS-485 transmission direction • Supports wake-up function • 8-bit receiver FIFO time-out detection function • Supports break error, frame error, parity error and receive/transmit FIFO overflow detection function • PDMA operation.
Smart Card Interface	• ISO-7816-3 which are compliant with ISO-7816-3 T=0, T=1 • Supports full duplex UART function. • 4-byte FIFOs with programmable level trigger • Programmable guard time selection (11 ETU ~ 266 ETU) • One 24-bit and two 8 bit time-out counters for Answer to Request (ATR) and waiting times processing • Auto inverse convention function • Stop clock level and clock stop (clock keep) function • Transmitter and receiver error retry function • Supports hardware activation, deactivation and warm reset sequence process • Supports hardware auto deactivation sequence after card removal.
I^2C	• Three sets of I^2C devices with Master/Slave mode • Supports Standard mode (100 kbps), Fast mode (400 kbps), Fast mode plus (1 Mbps) and High speed mode (3.4Mbps) • Supports 10 bits mode • Programmable clocks allowing for versatile rate control • Supports multiple address recognition (four slave address with mask option) • Supports SMBus and PMBus • Supports multi-address power-down wake-up function • PDMA operation
SPI Master (SPI Flash) (M48xID)	• Maximum 32 MB external SPI Flash memory with standard (1-bit), dual (2-bit) and quad (4-bit) transfer mode. • 32 KB cache memory for enhancing program execution performance. • 64-bit key length for code protection. • DMA mode for code transfer between SPI Flash memory and SRAM. • SPI Master function with 8-, 16-, 24-, and 32-bit length of transaction and burst mode operation, which can transmit/receive data up to four successive transactions in one transfer. • Supports eXcute-In-Place (XIP)

Quad SPI	• SPI Quad controller with Master/Slave mode, up to 96 MHz at 2.7V~3.6V stsyem voltage. • Supports Dual and Quad I/O Transfer mode • Supports one/two data channel half-duplex transfer. (M48xID/M487KMCAN) • Supports one data channel half-duplex transfer. (M48xGC/M48xE8) • Supports double data rate mode. (M48xGC/M48xE8) • Supports receive-only mode • Configurable bit length of a transfer word from 8 to 32-bit • Provides separate 8-level depth transmit and receive FIFO buffers • Supports MSB first or LSB first transfer sequence • Supports the byte reorder function • Supports Byte or Word Suspend mode • Supports 3-wired, no slave select signal, bi-direction interface • PDMA operation.
SPI/I²S	• SPI/I²S controllers with Master/Slave mode. • SPI/I²S provides separate 4-level of 32-bit (or 8-level of 16-bit) transmit and receive FIFO buffers. **SPI** • Up to 96 MHz in both Master/Slave mode @ 2.7V-3.6V • Configurable bit length of a transfer word from 8 to 32-bit. • MSB first or LSB first transfer sequence. • Byte reorder function. • Supports Byte or Word Suspend mode. • Supports one data channel half-duplex transfer. • Supports receive-only mode. **I²S** • Supports mono and stereo audio data with 8-, 16-, 24- and 32-bit audio data sizes. • Supports PCM mode A, PCM mode B, I²S and MSB justified data format. • PDMA operation.
I²S	• One set of I²S interface with Master/Slave mode. • Supports mono and stereo audio data with 8-, 16-, 24- and 32-bit word sizes. • Two 16-level FIFO data buffers, one for transmitting and the other for receiving. • Supports I²S protocols: Philips standard, MSB-justified, and LSB-justified data format. • Supports PCM protocols: PCM standard, MSB-justified, and

	LSB-justified data format. • PCM protocol supports TDM multi-channel transmission in one audio sample; the number of data channel can be set as 2, 4, 6 or 8. • PDMA operation.
Universal Serial Control Interface (USCI) **(M48xID/M487KMCAN)**	• Two sets of USCI,configured as UART, SPI or I²C function. • Supports single byte TX and RX buffer mode **UART** • Supports one transmit buffer and two receive buffers for data payload. • Supports hardware auto flow control function and programmable flow control trigger level. • 9-bit Data Transfer. • Baud rate detection by built-in capture event of baud rate generator. • Supports wake-up function. • PDMA operation. **SPI** • Supports Master or Slave mode operation. • Supports one transmit buffer and two receive buffer for data payload. • Supports additional receive/transmit 16 entries FIFO for data payload. • Configurable bit length of a transfer word from 4 to 16-bit (SPI Quad transmission only supports 8 to 16-bit of word length). • Supports MSB first or LSB first transfer sequence. • Supports Word Suspend function. • Supports 3-wire, no slave select signal, bi-direction interface. • Supports wake-up function: input slave select transition. • PDMA operation. **I²C** • Supports master and slave device capability. • Supports one transmit buffer and two receive buffer for data payload. • Communication in standard mode (100 kbps), fast mode (up to 400 kbps), and Fast mode plus (1 Mbps). • Supports 10-bit mode. • Supports 10-bit bus time out capability. • Supports bus monitor mode. • Supports power-down wake-up by data toggle or address match. • Supports multiple address recognition. • Supports device address flag.

	• Programmable setup/hold time.
Controller Area Network (CAN)	• CAN 2.0B controllers. • Each supports 32 Message Objects; each Message Object has its own identifier mask. • Programmable FIFO mode (concatenation of Message Object). • Disabled Automatic Re-transmission mode for Time Triggered CAN applications. • Supports power-down wake-up function.
Secure Digital Host Controller (SDHC)	• Secure Digital Host Controllers are compliant with SD Memory Card Specification Version 2.0. • Supports 50 MHz to achieve 200 Mbps at 3.3V operation. • Supports dedicated DMA master with Scatter-Gather function to accelerate the data transfer between system memory and SD/SDHC/SDIO card.
External Bus Interface (EBI)	• Supports up to three memory banks with individual adjustment of timing parameter. • Each bank supports dedicated external chip select pin with polarity control and up to 1 MB addressing space. • 8-/16-bit data width. • Supports byte write in 16-bit data width mode. • Configurable idle cycle for different access condition: Idle of Write command finish (W2X) and Idle of Read-to-Read (R2R). • Supports Address/Data multiplexed mode. • Supports address bus and data bus separate mode. • Supports LCD interface i80 mode. • PDMA operation.
GPIO	• Supports four I/O modes: Quasi bi-direction, Push-Pull output, Open-Drain output and Input only with high impendence mode. • Selectable TTL/Schmitt trigger input. • Configured as interrupt source with edge/level trigger setting. • Supports independent pull-up/pull-down control. • Supports high driver and high sink current I/O. • Supports software selectable slew rate control. • Supports 5V-tolerance function except analog I/O.
Control Interfaces	
Quadrature Encoder Interface (QEI)	• Two QEI phase inputs (QEI_A, QEI_B) and one Index input (QEI_INDEX). • Supports 2/4 times free-counting mode and 2/4 compare-counting mode. • Supports encoder pulse width measurement mode with ECAP.

Enhanced Capture (ECAP)	**Input Capture Timer/Counter** • Supports three input channels with independent capture counter hold register. • 24-bit Input Capture up-counting timer/counter supports captured events reset and/or reload capture counter. • Supports rising edge, falling edge and both edge detector options with noise filter in front of input ports. • Supports compare-match function.
Advanced Connectivity	
USB 2.0 Full Speed with on-chip transceiver	**USB 2.0 Full Speed OTG (On-The-Go)** • On-chip USB 2.0 full speed OTG transceiver. • Compliant with USB OTG Supplement 2.0 • Configurable as host-only, device-only or ID-dependent **USB 2.0 Full Speed Host Controller** • Compliant with USB Revision 1.1 Specification. • Compatible with OHCI (Open Host Controller Interface) Revision 1.0. • Supports full-speed (12Mbps) and low-speed (1.5Mbps) USB devices. • Supports Control, Bulk, Interrupt, Isochronous and Split transfers. • Integrated a port routing logic to route full/low speed device to OHCI controller. • Supports an integrated Root Hub. • Supports port power control and port over current detection. • Built-in DMA. **USB 2.0 Full Speed Device Controller** • Compliant with USB Revision 2.0 Specification. • Supports suspend function when no bus activity existing for 3 ms. • 12 configurable endpoints for configurable Isochronous, Bulk, Interrupt and Control transfer types. • 1024 bytes configurable RAM for endpoint buffer. • Remote wake-up capability. • Supports crystall-less features. (M48xGC/M48xE8) • USB 2.0 link power management. (M48xID/M487KMCAN)
USB 2.0 High Speed with on-chip transceiver **(M48xID/M487KMCAN)**	**USB 2.0 High Speed OTG (On-The-Go)** • On-chip USB 2.0 high speed OTG transceiver. • Compliant with USB OTG Supplement 2.0. • Configurable as host-only, device-only or ID-dependent.

	USB 2.0 High Speed Host Controller • Compliant with USB Revision 2.0 Specification. • Compatible with EHCI (Enhanced Host Controller Interface) Revision 1.0. • Compatible with OHCI (Open Host Controller Interface) Revision 1.0. • Supports high-speed (480Mbps), full-speed (12Mbps) and low-speed (1.5Mbps) USB devices. • Integrated a port routing logic to route full/low speed device to OHCI controller. • Supports an integrated Root Hub. • Built-in DMA. **USB 2.0 High Speed Device Controller** • Compliant with USB Revision 2.0 Specification. • Supports one dedicate control endpoint and 12 configurable endpoints; each can be Isochronous, Bulk or Interrupt and either IN or OUT direction. • 4096 bytes configurable RAM for endpoint buffer and up to 1024 bytes maximum packet size. • Three different operation modes of an in-endpoint: Auto Validation mode, Manual Validation mode and Fly mode. • Suspend, resume and remote wake-up capability. • Built-in DMA.
Ethernet MAC **(M48xID/M487KMCAN)**	• IEEE Std. 802.3 CSMA/CD protocol. • Ethernet frame time stamping for IEEE Std. 1588 – 2002 protocol. • Supports both half and full duplex for 10 Mbps or 100 Mbps operation. • RMII (Reduced Media Independent Interface) and serial management interface (MDC/MDIO). • Pause and remote pause function for flow control. • Long frame (more than 1518 bytes) and short frame (less than 64 bytes) reception. • CAM function for Ethernet MAC address recognition. • Supports Magic Packet recognition to wake system up from Power-down mode. • Built-in DMA.
Digital Camera Interface	
Camera Capture Interface (CCAP) **(M48xGC/M48xE8)**	• Supports CCIR601, CCIR656 and 4-bit interfaces for CMOS sensor. • Color format for data input supports YUV4:2:2 and RGB565. • Color format for data output supports YUV4:2:2, RGB565, RGB555 and Y-only.

	• Supports 1-bit Y(luminance) output with 8-bit threshold setting for image thresholding. • Supports image cropping and downscaling.
Cryptography Accelerator	
Elliptic Curve Cryptography (ECC)	• Hardware ECC accelerator. • Supports 192-bit and 256-bit key length. • Supports both prime field GF(p) and binary field GF(2^m). • Supports NIST P-192, P-224, P-256, P-384 and P-521 curve sizes. • Supports NIST B-163, B-233, B-283, B-409 and B-571 curve sizes. • Supports NIST K-163, K-233, K-283, K-409 and K-571 curve sizes. • Supports point multiplication, addition and doubling operations in GF(p) and GF(2^m). • Supports modulus division, multiplication, addition and subtraction operations in GF(p).
Advanced Encryption Standard (AES)	• Hardware AES accelerator. • Supports 128-bit, 192-bit and 256-bit key length and key expander, and is compliant with FIPS 197. • Supports ECB, CBC, CFB, OFB, CTR, CBC-CS1, CBC-CS2 and CBC-CS3 block cipher modes • Compliant with NIST SP800-38A and addendum.
Data Encryption Standard (DES) **(M48xID/M487KMCAN)**	• Hardware DES accelerator. • Supports ECB, CBC, CFB, OFB, and CTR block cipher mode. • Compliant with FIPS 46-3.
Triple Data Encryption Standard (3DES) **(M48xID/M487KMCAN)**	• Hardware Triple DES accelerator. • Supports two or three different keys in each round. • Supports ECB, CBC, CFB, OFB, and CTR block cipher mode. • Implemented based on X9.52 standard and compliant with FIPS SP 800-67.
Secure Hash Algorithm (SHA)	• Hardware SHA accelerator. • Supports SHA-160, SHA-224, SHA-256, SHA-384 and SHA-512. (M48xID/M487KMCAN) • Supports SHA-256. (M48xID/M487KMCAN) • Compliant with FIPS 180/180-2.
keyed-Hash Message	• Hardware HMAC accelerator.

Authentication Code (HMAC)	• Supports HMAC-SHA-160, HMAC-SHA-224, HMAC-SHA-256, HMAC-SHA-384, and HMAC-SHA-512. (M48xID/M487KMCAN) • Supports HMAC-SHA-256. (M48xID/M487KMCAN) • Compliant with FIPS 180/180-2.
True Random Number Generator (TRNG) **(M48xGC/M48xE8)**	• 800 random bits per second.

3 PARTS INFORMATION

Package is Halogen-free, RoHS-compliant and TSCA-compliant.

3.1 Package Type

Part No.	QFN33	QFN48	LQFP48	LQFP64	LQFP128	LQFP144
M481	M481ZGCAE M481ZIDAE M481ZE8AE		M481LGCAE M481LIDAE M481LE8AE	M481SGCAE M481SIDAE M481SE8AE M481SGCAE2A		
M482	M482ZGCAE M482ZIDAE M482ZE8AE		M482LGCAE M482LIDAE M482LE8AE	M482SGCAE M482SIDAE M482SE8AE	M482KGCAE M482KIDAE	
M483				M483SGCAE M483SIDAE M483SE8AE M483SGCAE2A	M483KGCAE M483KIDAE M483KGCAE2A	
M484				M484SIDAE M484SIDAE2U	M484KIDAE	
M485	M485ZIDAE	M485YIDAE	M485LIDAE	M485SIDAE	M485KIDAE	
M487				M487SIDAE	M487KIDAE M487KMCAN	M487JIDAE

3.2 M480 Series Selection Guide

3.2.1 M481 Base Series (M481xIDAE)

PART NUMBER		M481		
		ZIDAE	LIDAE	SIDAE
Flash (KB)		512		
SRAM (KB)		160 (include 32 KB cache for XIP)		
ISP Loader ROM (KB)		4		
I/O		26	41	52
32-bit Timer		4		
Peripheral DMA		16		
Tamper		-	-	1
Connectivity	LPUART	6		
	ISO-7816	3		
	SPI Master	1 (Support XIP)		
	Quad SPI	1		
	SPI/I²S	3	3	4
	I²S	1		
	I²C	3		
	USCI	2		
	CAN	-		
	LIN	2		
	SDHC	1	2	2
16-bit PWM		24		
QEI		1	2	2
ECAP		-	1	1
USB 2.0 FS OTG		-		
USB 2.0 HS OTG		-		
12-bit ADC		10	12	16
12-bit DAC		2		
Analog Comparator		2		
Operational Amplifier		1	2	2
Ethernet		-		
Cryptography		-		
External Bus Interface		-	√	√
Package		QFN 32	LQFP 48	LQFP 64

3.2.2 M481 Base Series (M481xGCAE / M481xE8AE)

PART NUMBER		M481						
		ZE8AE	ZGCAE	LE8AE	LGCAE	SE8AE	SGCAE	SGCAE2A
Flash (KB) (Support XOM)		128	256	128	256	128	256	256
SRAM (KB)		64	128	64	128	64	128	128
ISP Loader ROM (KB)		4						
I/O		26		41		52		52
32-bit Timer		4						
Peripheral DMA		16						
Tamper		-		-		1		1
Connectivity	LPUART	8						
	ISO-7816	1						
	SPI Master	-						
	Quad SPI	2						
	SPI/I²S	2		3		3		3
	I²S	1						
	I²C	3						
	USCI	-						
	CAN	-						
	LIN	2						
	SDHC	1						
16-bit PWM		24						
QEI		1		2		2		2
ECAP		-		1		1		1
USB 2.0 FS OTG		-						
USB 2.0 HS OTG		-						
12-bit ADC		10		12		16		**8+8**
12-bit DAC		1						
Analog Comparator		2						
Operational Amplifier		-						
Ethernet		-						
Cryptography		√						
TRNG		√						
External Bus Interface		-		√		√		√
Camera Interface		-		-		√		√
Package		QFN33		LQFP 48		LQFP 64		LQFP 64

3.2.3 M482 USB FS OTG Series (M482xIDAE)

PART NUMBER		M482			
		ZIDAE	LIDAE	SIDAE	KIDAE
Flash (KB)		512			
SRAM (KB)		160 (include 32 KB cache for XIP)			
ISP Loader ROM (KB)		4			
I/O		26	41	52	100
32-bit Timer		4			
Peripheral DMA		16			
Tamper		-	-	1	6
Connectivity	LPUART	6			
	ISO-7816	3			
	SPI Master	1 (Support XIP)			
	Quad SPI	1			
	SPI/I²S	3	3	4	4
	I²S	1			
	I²C	3			
	USCI	2			
	CAN	-			
	LIN	2			
	SDHC	1	2	2	2
16-bit PWM		24			
QEI		1	2	2	2
ECAP		-	1	1	2
USB 2.0 FS OTG		√			
USB 2.0 HS OTG		-			
12-bit ADC		10	12	16	16
12-bit DAC		2			
Analog Comparator		2			
Operational Amplifier		1	2	2	3
Ethernet		-			
Cryptography		-			
External Bus Interface		-	√	√	√
Package		QFN33	LQFP 48	LQFP 64	LQFP 128

3.2.4 M482 USB FS OTG Series (M482xGCAE / M482xE8AE)

PART NUMBER		M482						
		ZE8AE	ZGCAE	LE8AE	LGCAE	SE8AE	SGCAE	KGCAE
Flash (KB) (Support XOM)		128	256	128	256	128	256	256
SRAM (KB)		64	128	64	128	64	128	128
ISP Loader ROM (KB)		4						
I/O		26		41		52		100
32-bit Timer		4						
Peripheral DMA		16						
Tamper		-		-		1		6
Connectivity	LPUART	8						
	ISO-7816	1						
	SPI Master	-						
	Quad SPI	2						
	SPI/I²S	2		3		3		3
	I²S	1						
	I²C	3						
	USCI	-						
	CAN	-						
	LIN	2						
	SDHC	1						
16-bit PWM		24						
QEI		1		2		2		2
ECAP		-		1		1		2
USB 2.0 FS OTG		√ (Crystal-less)						
USB 2.0 HS OTG		-						
12-bit ADC		10		12		16		16
12-bit DAC		1						
Analog Comparator		2						
Operational Amplifier		-						
Ethernet		-						
Cryptography		√						
TRNG		√						
External Bus Interface		-		√		√		√
Camera Interface		-		-		√		√
Package		QFN33		LQFP 48		LQFP 64		LQFP 128

3.2.5 M483 CAN Series (M483xIDAE)

PART NUMBER		M483	
		SIDAE	KIDAE
Flash (KB)		512	
SRAM (KB)		160 (include 32 KB cache for XIP)	
ISP Loader ROM (KB)		4	
I/O		44	100
32-bit Timer		4	
Peripheral DMA		16	
Tamper		1	6
Connectivity	LPUART	6	
	ISO-7816	3	
	SPI Master	1	
	Quad SPI	1	
	SPI/I²S	4	
	I²S	1	
	I²C	3	
	USCI	2	
	CAN	2	
	LIN	2	
	SDHC	2	
16-bit PWM		24	
QEI		2	
ECAP		1	2
USB 2.0 FS OTG		-	√
USB 2.0 HS OTG		√	
12-bit ADC		16	
12-bit DAC		2	
Analog Comparator		2	
Operational Amplifier		2	3
Ethernet		-	
Cryptography		-	
External Bus Interface		√	
Package		LQFP 64	LQFP 128

3.2.6 M483 CAN Series (M483xGCAE / M483xE8AE)

PART NUMBER		M483				
		SE8AE	SGCAE	SGCAE2A	KGCAE	KGCAE2A
Flash (KB) (Support XOM)		128	256	256	256	
SRAM (KB)		64	128	128	128	
ISP Loader ROM (KB)		4				
I/O		52		52	100	
32-bit Timer		4				
Peripheral DMA		16				
Tamper		1		1	6	
Connectivity	LPUART	8				
	ISO-7816	1				
	SPI Master	-				
	Quad SPI	2				
	SPI/I²S	3				
	I²S	1				
	I²C	3				
	USCI	-				
	CAN	3				
	LIN	2				
	SDHC	1				
16-bit PWM		24				
QEI		2				
ECAP		1		1	2	
USB 2.0 FS OTG		√ (Crystal-less)				
USB 2.0 HS OTG		-				
12-bit ADC		16		**8+8**	16	**16+8**
12-bit DAC		1				
Analog Comparator		2				
Operational Amplifier		-				
Ethernet		-				
Cryptography		√				
TRNG		√				
External Bus Interface		√				
Camera Interface		√				
Package		LQFP 64		LQFP 64	LQFP 128	

3.2.7 M484 USB HS OTG Series

PART NUMBER		M484		
		SIDAE	SIDAE2U	KIDAE
Flash (KB)		512		
SRAM (KB)		160 (include 32 KB cache for XIP)		
ISP Loader ROM (KB)		4		
I/O		44	44	100
32-bit Timer		4		
Peripheral DMA		16		
Tamper		1	1	6
Connectivity	LPUART	6		
	ISO-7816	3		
	SPI Master	1		
	Quad SPI	1		
	SPI/I^{2}S	4		
	I^{2}S	1		
	I^{2}C	3		
	USCI	2		
	CAN	-		
	LIN	2		
	SDHC	2		
16-bit PWM		24		
QEI		2		
ECAP		1	1	2
USB 2.0 FS OTG		-	√	√
USB 2.0 HS OTG		√		
12-bit ADC		16		
12-bit DAC		2		
Analog Comparator		2		
Operational Amplifier		2	2	3
Ethernet		-		
Cryptography		-		
External Bus Interface		√		
Package		LQFP 64	LQFP 64	LQFP 128

3.2.8 M485 Crypto Series

PART NUMBER		M485				
		ZIDAE	YIDAE	LIDAE	SIDAE	KIDAE
Flash (KB)		512				
SRAM (KB)		160 (include 32 KB cache for XIP)				
ISP Loader ROM (KB)		4				
I/O		26	41	41	44	100
32-bit Timer		4				
Peripheral DMA		16				
Tamper		-	-	-	1	6
Connectivity	LPUART	6				
	ISO-7816	3				
	SPI Master	1				
	Quad SPI	1				
	SPI/I²S	3	4	3	4	4
	I²S	1				
	I²C	3				
	USCI	2				
	CAN	-	2	-		
	LIN	2				
	SDHC	1	1	2	2	2
16-bit PWM		24				
QEI		1	2	2	2	2
ECAP		-	-	1	1	2
USB 2.0 FS OTG		√	√	√	-	√
USB 2.0 HS OTG		-	-	-	√	√
12-bit ADC		10	16	12	16	16
12-bit DAC		2				
Analog Comparator		2				
Operational Amplifier		1	1	2	2	3
Ethernet		-				
Cryptography		√				
External Bus Interface		-	-	√	√	√
Package		QFN33	QFN48	LQFP 48	LQFP 64	LQFP 128

3.2.9 M487 Ethernet Series

PART NUMBER		M487			
		SIDAE	KIDAE	JIDAE	KMCAN
Flash (KB)		512			2560
SRAM (KB)		160			
ISP Loader ROM (KB)		4			
I/O		44	100	114	94
32-bit Timer		4			
Peripheral DMA		16			
Tamper		1	6	6	6
Connectivity	LPUART	6			
	ISO-7816	3			
	SPI Master	1			-
	Quad SPI	1			
	SPI/I²S	4			
	I²S	1			
	I²C	3			
	USCI	2			
	CAN	2			
	LIN	2			
	SDHC	2			
16-bit PWM		24			
QEI		2			
ECAP		1	2	2	2
USB 2.0 FS OTG		-	√	√	√
USB 2.0 HS OTG		√			
12-bit ADC		16			
12-bit DAC		2			
Analog Comparator		2			
Operational Amplifier		2	3	3	3
Ethernet		√			
Cryptography		√			
External Bus Interface		√			
Package		LQFP 64	LQFP 128	LQFP 144	LQFP 128

3.3 M480 Selection Code

M4	81	Z	G	D	A	E	2A
Core	Series	Package	Flash Size	SRAM Size	Revision	Temperature	Peripheral
Cortex®-M4F	81: Base 82: USB FS 83: CAN 84: USB HS 85: Crypto 87: Ethernet	Z: QFN33 (5x5 mm) Y: QFN48 (5x5 mm) L: LQFP48 (7x7 mm) C: WLCSP S: LQFP64 (7x7 mm) O: QFN88 (10x10 mm) V: LQFP100 (14x14 mm) K: LQFP128 (14x14 mm) J: LQFP144 (20x20 mm)	A: 8 Kbytes B: 16 Kbytes C: 32 Kbytes D: 64 Kbytes E: 128 Kbytes F: 192 Kbytes G: 256 Kbytes H: 384 Kbytes I: 512 Kbytes M: 2560 Kbytes	1: 4 Kbytes 2: 8 Kbytes 3: 16 Kbytes 4: 20 Kbytes 5: 24 Kbytes 6: 32 Kbytes 7: 48 Kbytes 8: 64 Kbytes 9: 80 Kbytes A: 96 Kbytes B: 112 Kbytes C: 128 Kbytes D: 160 Kbytes		E:-40˚C ~ 105˚C N:-40˚C ~ 85˚C	2A: 2 EADCs 2U: 2 USB ports

4 PIN CONFIGURATION

4.1 Pin Configuration

Users can find pin configuration information in chapter 4 or by using NuTool - PinConfig. The NuTool - PinConfigure contains all NuMicro Family chip series with all part number, and helps users configure GPIO multi-function correctly and handily.

4.1.1 QFN-33 Pin Diagram

Corresponding Part Number: M481ZE8AE, M481ZGCAE, M481ZIDAE, M482ZE8AE, M482ZGCAE, M482ZIDAE, M485ZIDAE

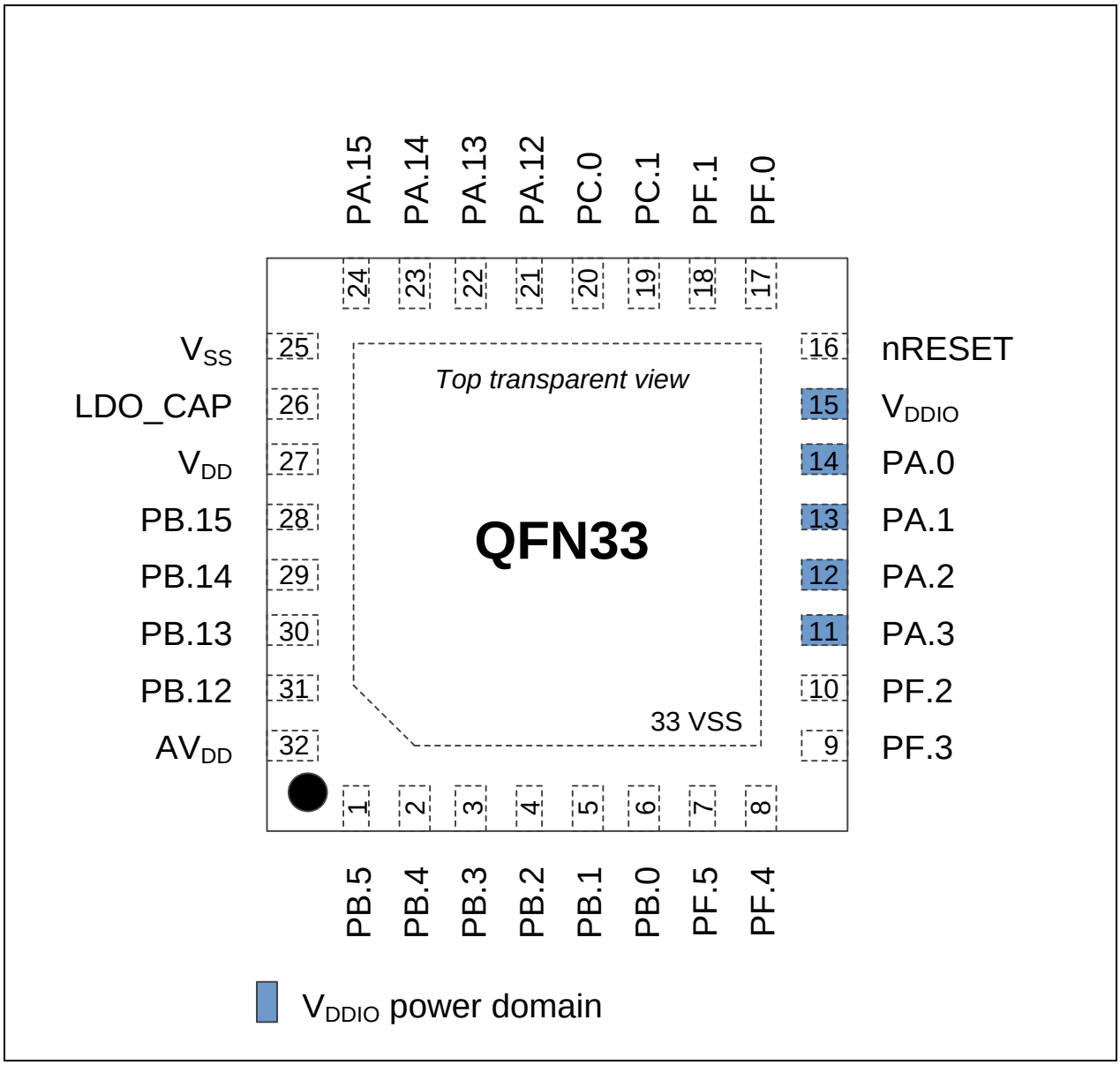

Figure 4.1-1 QFN-33 Pin Diagram (0/1 USB FS)

4.1.2 QFN-48 Pin Diagram

Corresponding Part Number: M485YIDAE

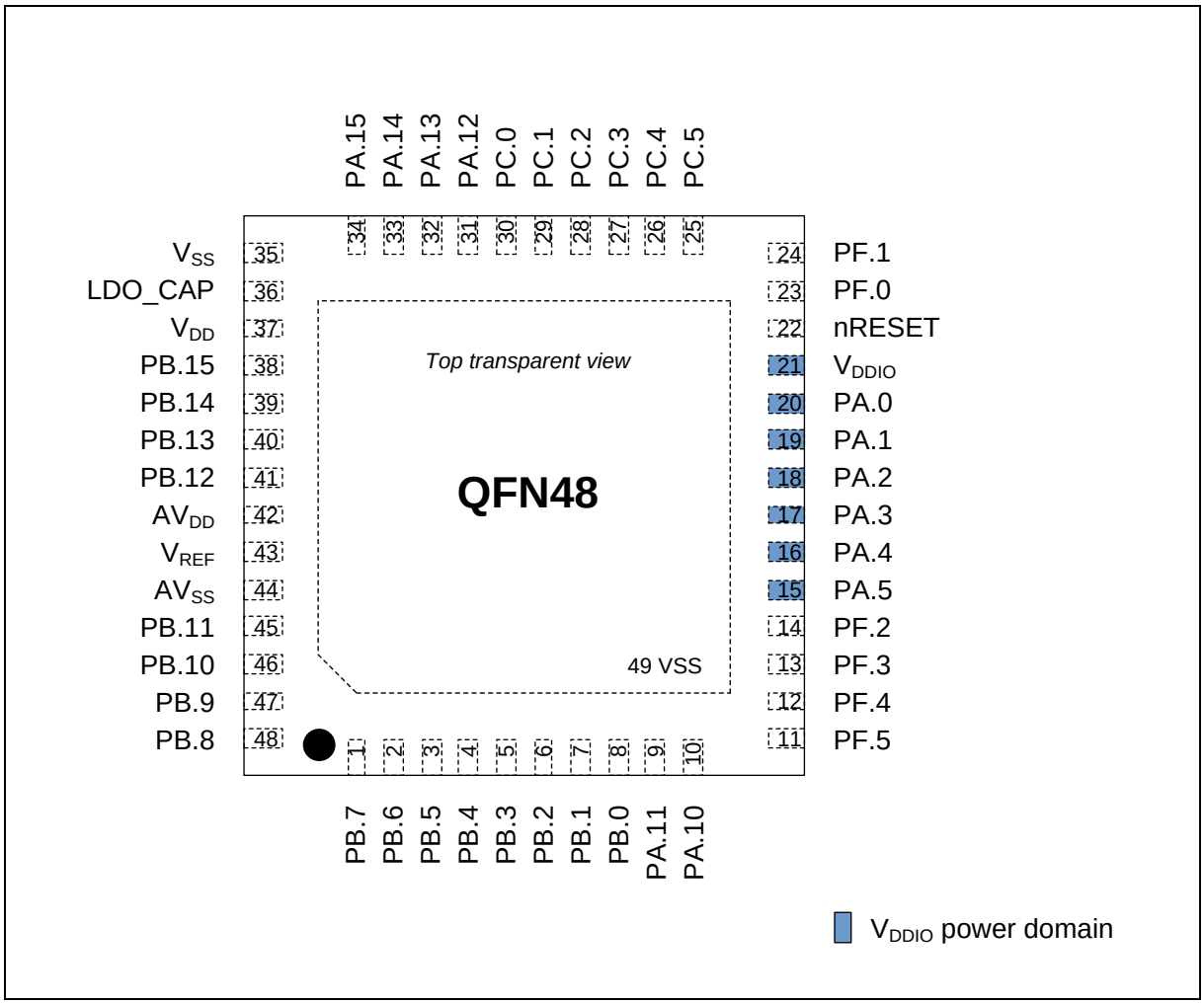

Figure 4.1-2 QFN-48 Pin Diagram

4.1.3 LQFP-48 Pin Diagram (0/1 USB FS)

Corresponding Part Number: M481LE8AE, M481LGCAE, M481LIDAE, M482LE8AE, M482LGCAE, M482LIDAE, M485LIDAE

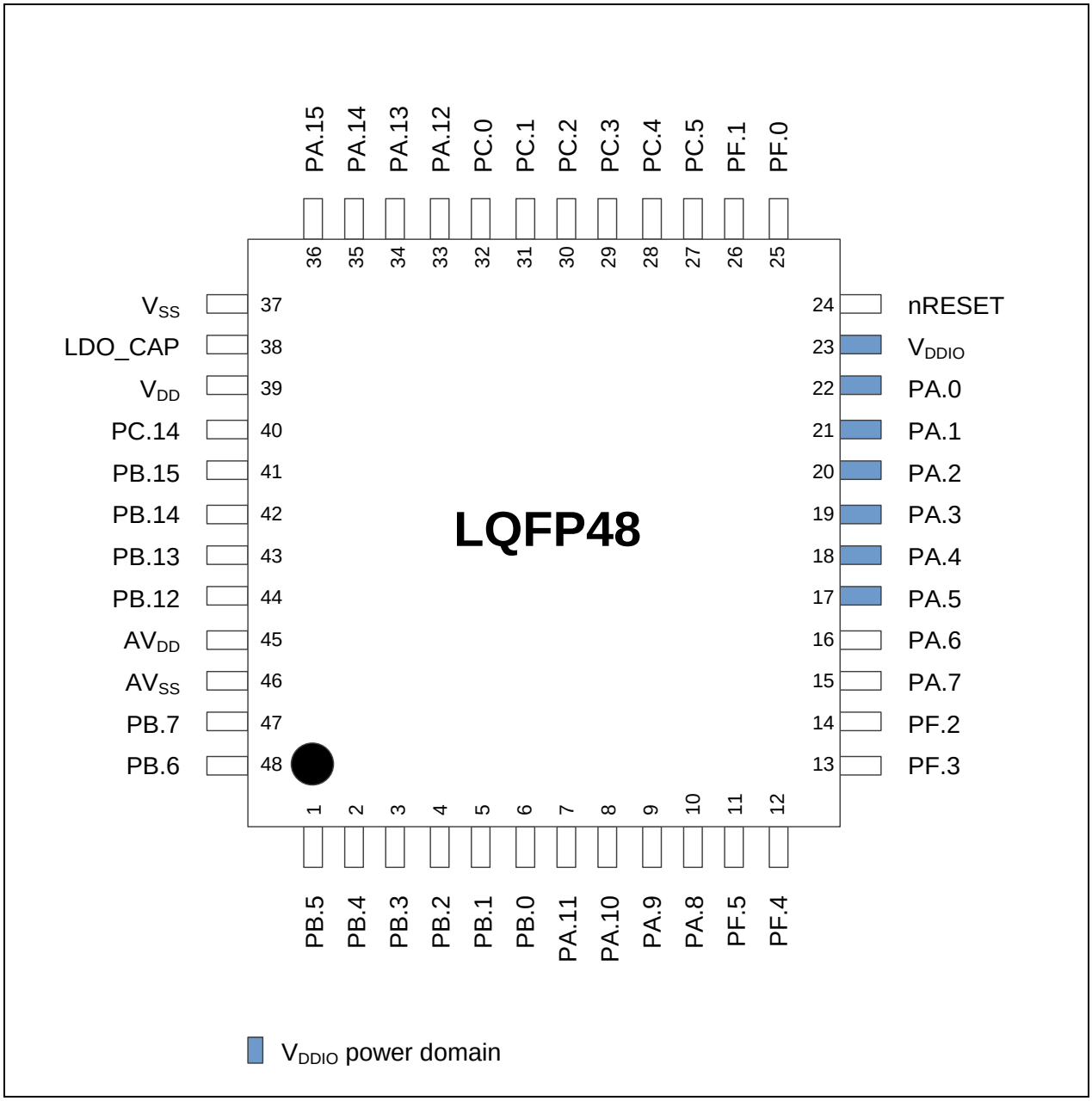

Figure 4.1-3 LQFP-48 Pin Diagram (0/1 USB FS)

4.1.4 LQFP-64 Pin Diagram (0/1 USB FS)

Corresponding Part Number: M481SIDAE, M482SIDAE

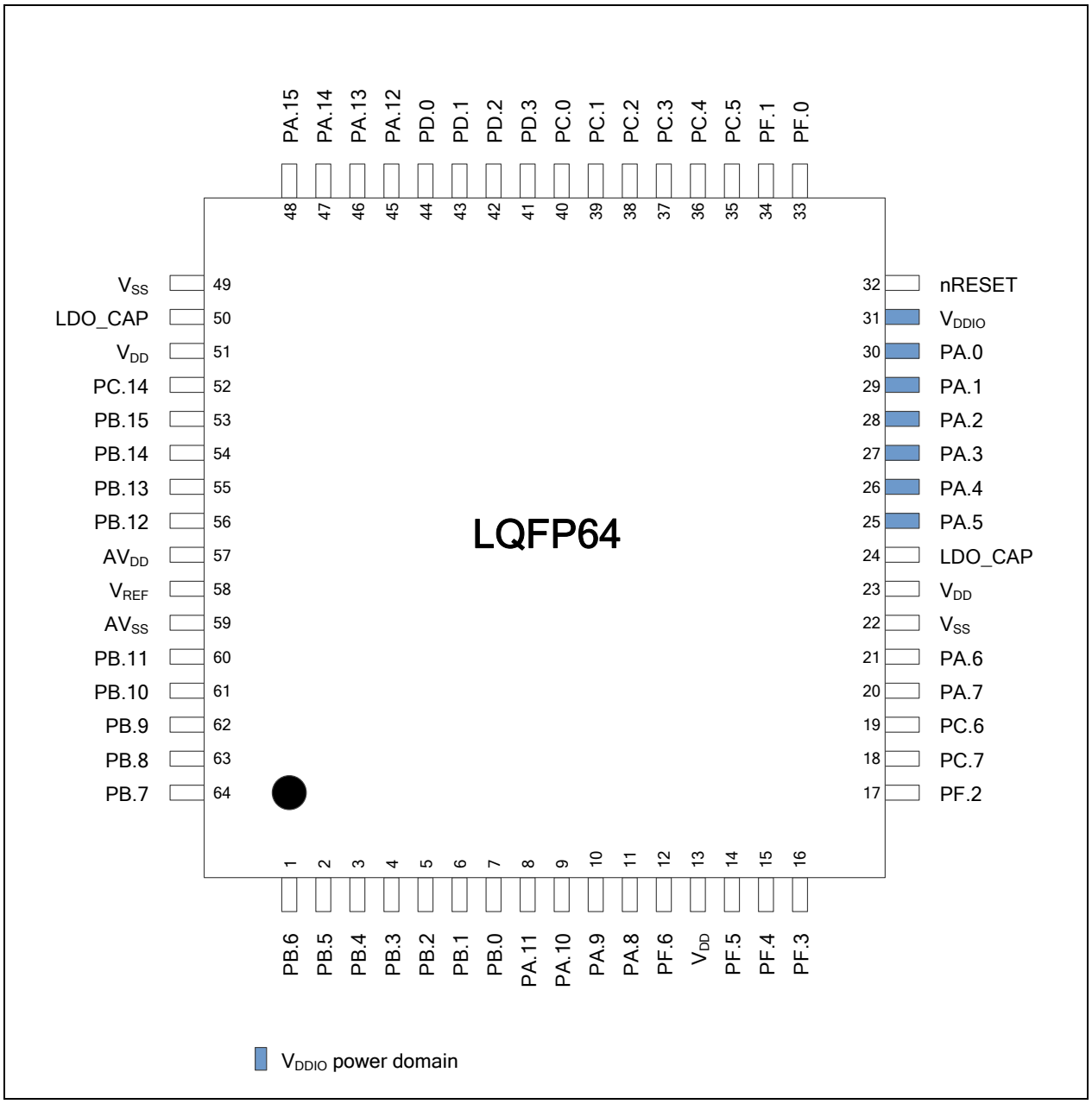

Figure 4.1-4 LQFP-64 Pin Diagram (0/1 USB FS)

4.1.5 LQFP-64 Pin Diagram (0/1 USB FS with V_{BAT})

Corresponding Part Number: M481SE8AE, M481SGCAE, M481SGCAE2A, M482SE8AE, M482SGCAE, M483SE8AE, M483SGCAE, M483SGCAE2A

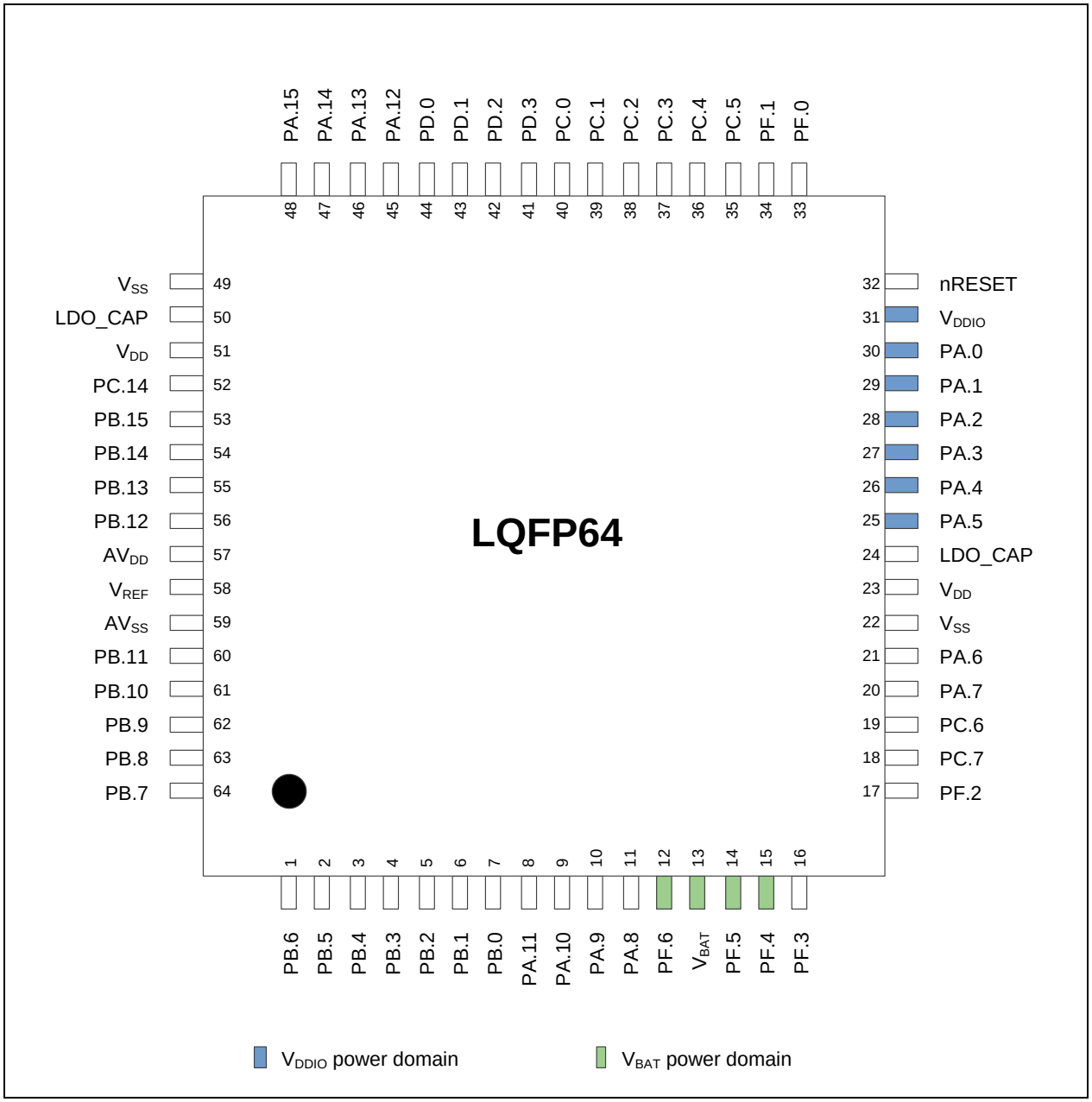

Figure 4.1-5 LQFP-64 Pin Diagram (0/1 USB FS with V_{BAT})

4.1.6 LQFP-64 Pin Diagram (1 USB HS)

Corresponding Part Number: M483SIDAE, M484SIDAE, M485SIDAE, M487SIDAE

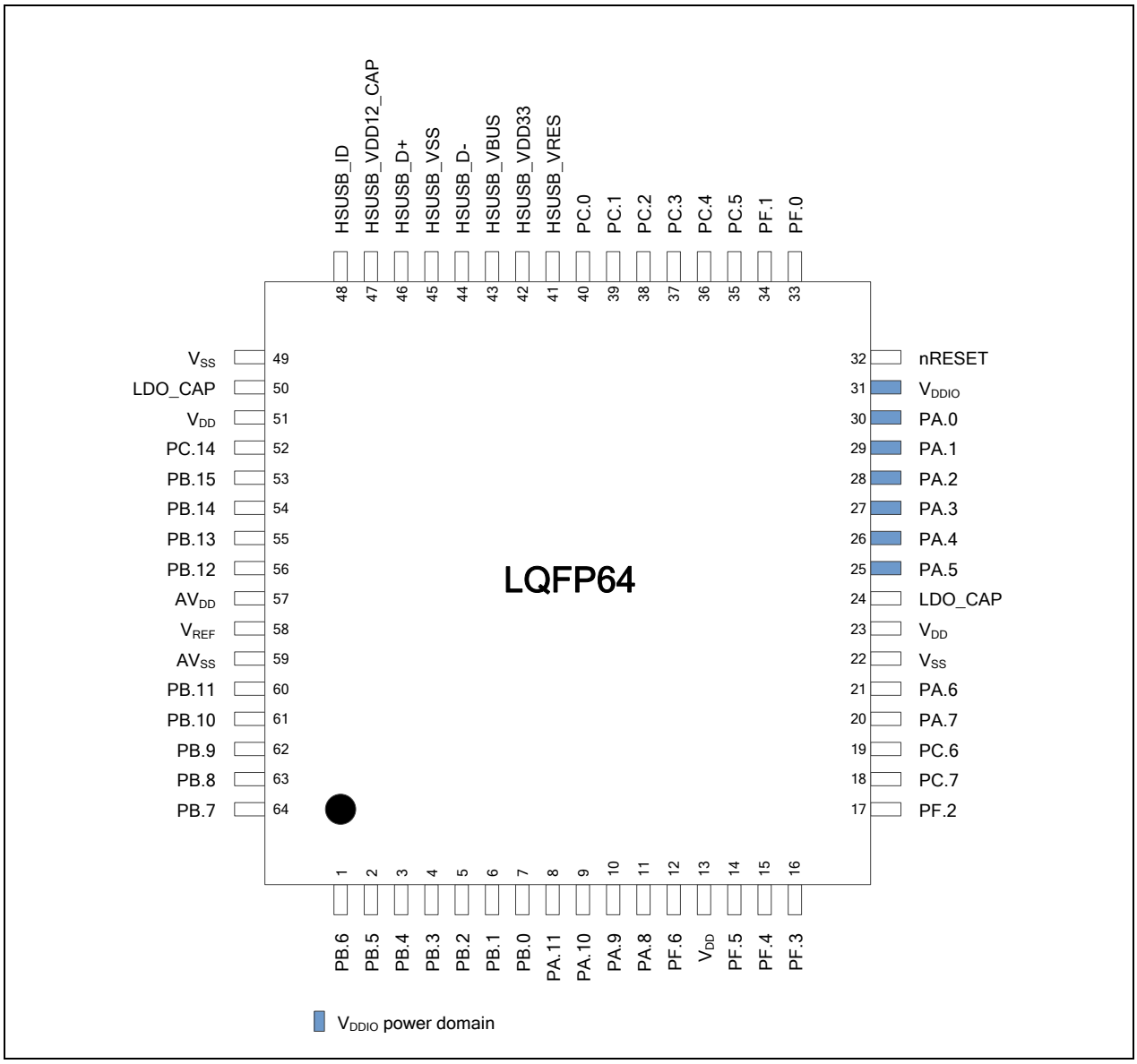

Figure 4.1-6 LQFP-64 Pin Diagram (1 USB HS)

4.1.7 LQFP-64 Pin Diagram (USB FS + USB HS)

Corresponding Part Number: M484SIDAE2U

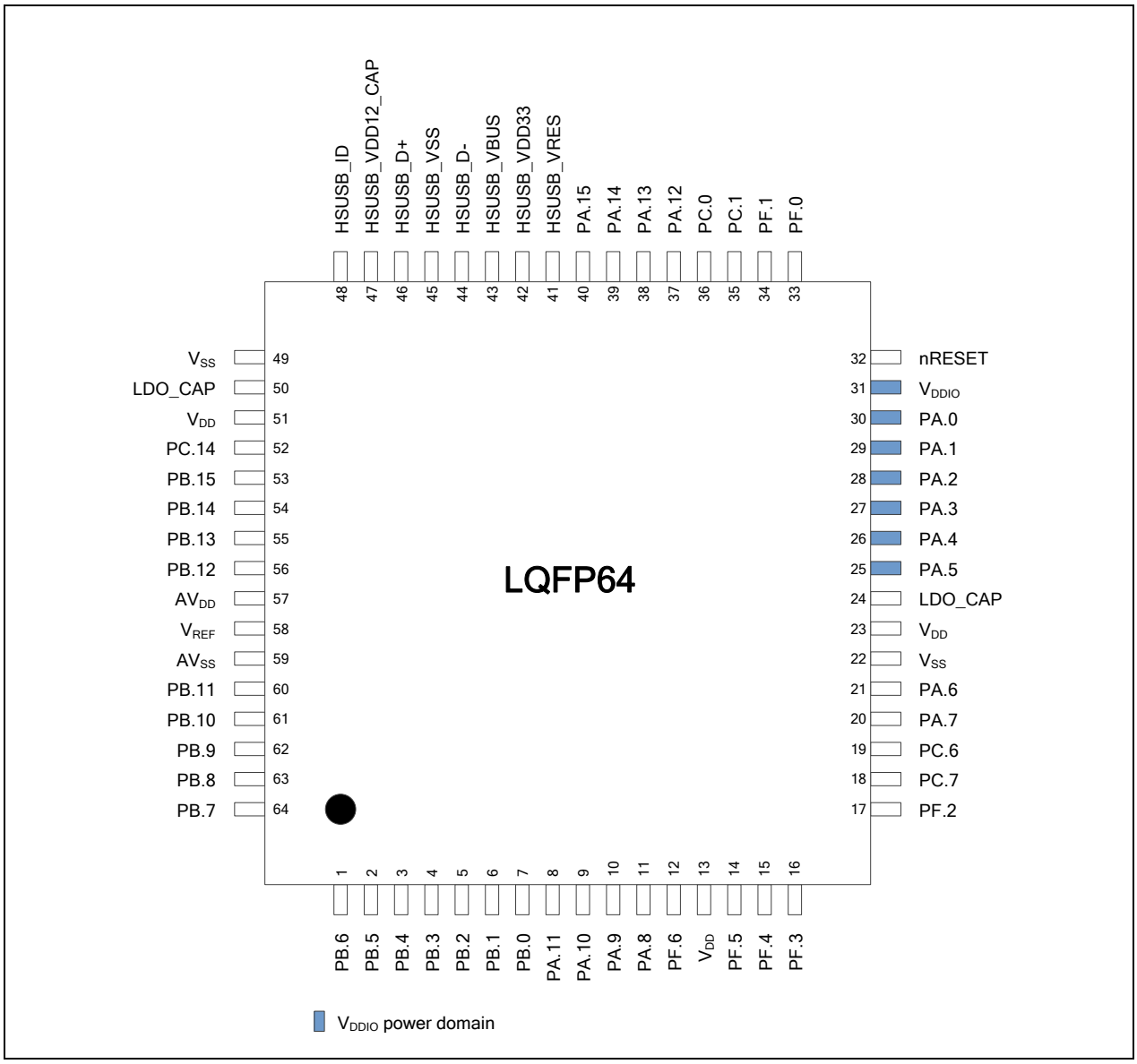

Figure 4.1-7 LQFP-64 Pin Diagram (USB FS + USB HS)

4.1.8 LQFP-128 Pin Diagram (1 USB FS)

Corresponding Part Number: M482KIDAE

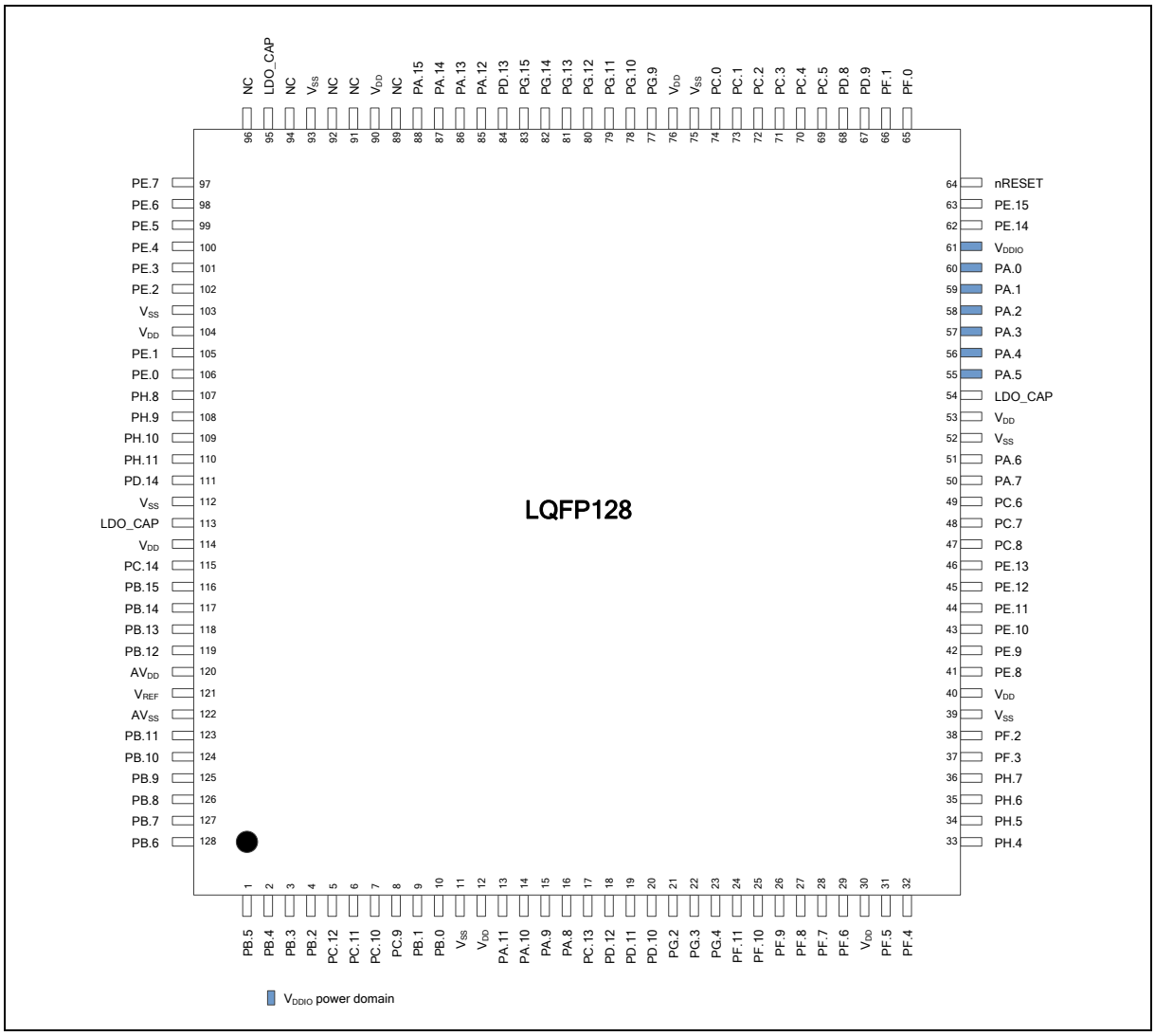

Figure 4.1-8 LQFP-128 Pin Diagram (1 USB FS)

4.1.9 LQFP-128 Pin Diagram (1 USB FS with V_{BAT})

Corresponding Part Number: M482KGCAE, M483KGCAE, M483KGCAE2A

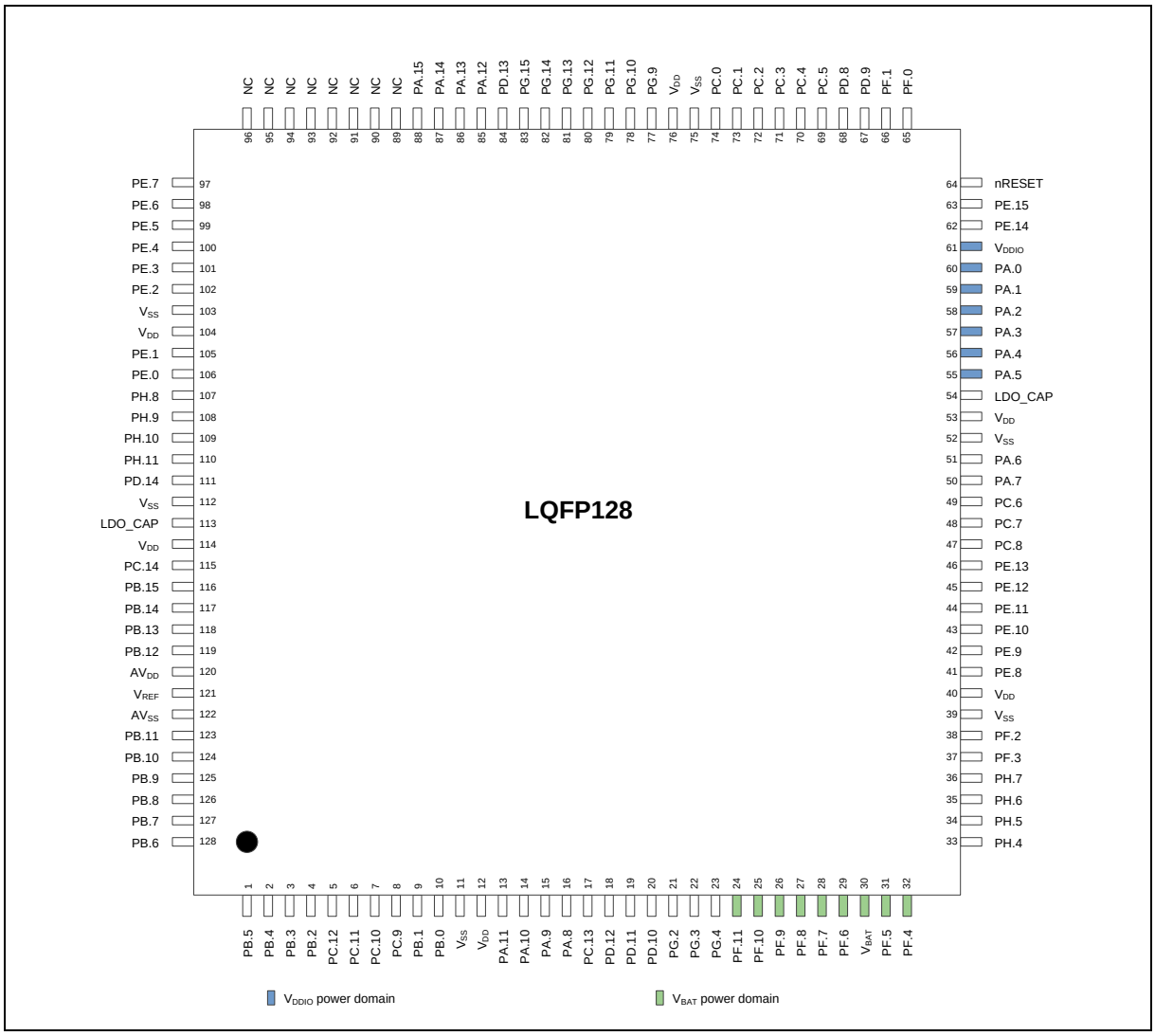

Figure 4.1-9 LQFP-128 Pin Diagram (1 USB FS)

4.1.10 LQFP-128 Pin Diagram (USB FS + USB HS)

Corresponding Part Number: M483KIDAE, M484KIDAE, M485KIDAE, M487KIDAE

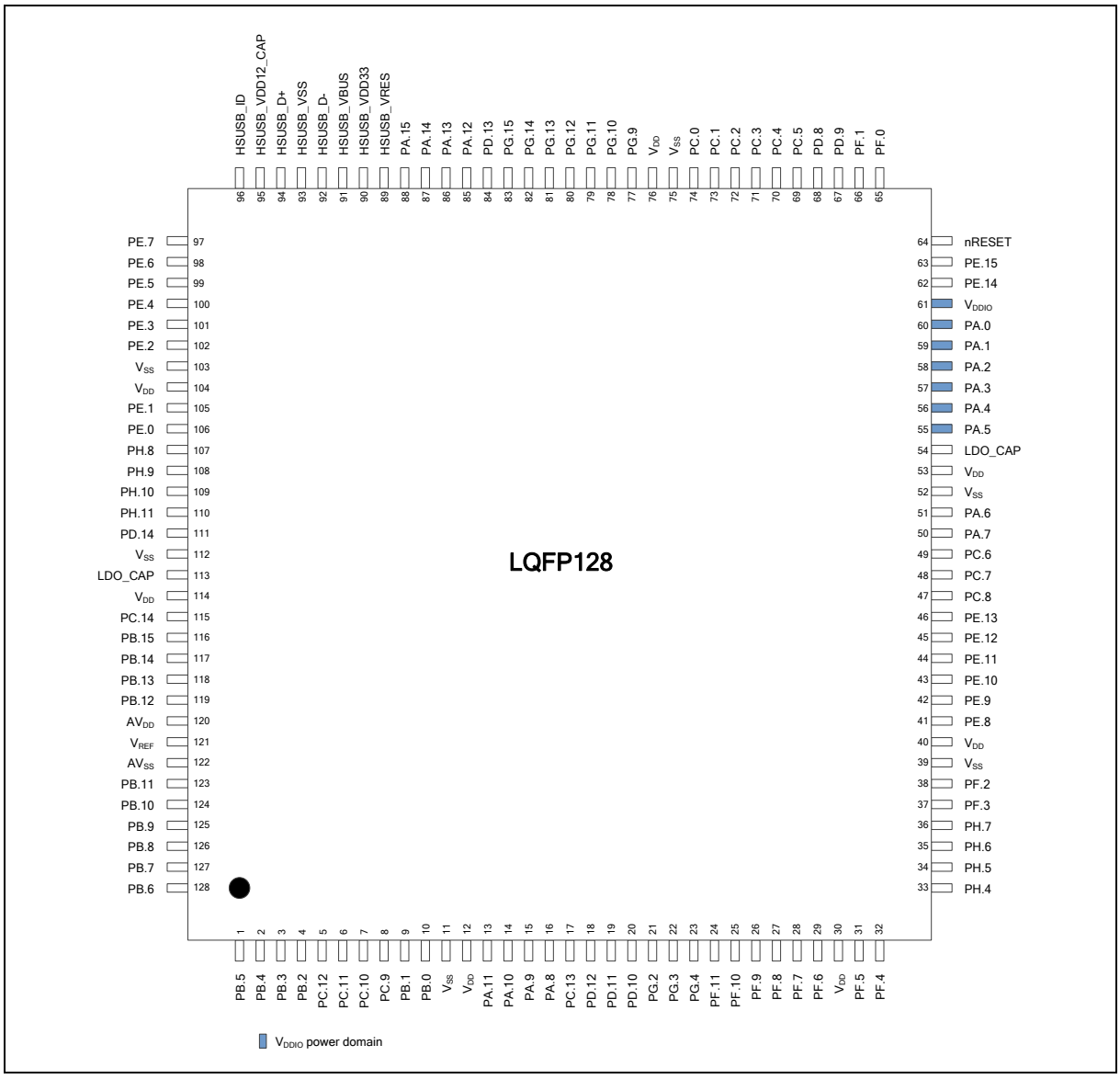

Figure 4.1-10 LQFP-128 Pin Diagram (USB FS + USB HS)

4.1.11 LQFP-128 Pin Diagram (USB FS + USB HS)

Corresponding Part Number: M487KMCAN

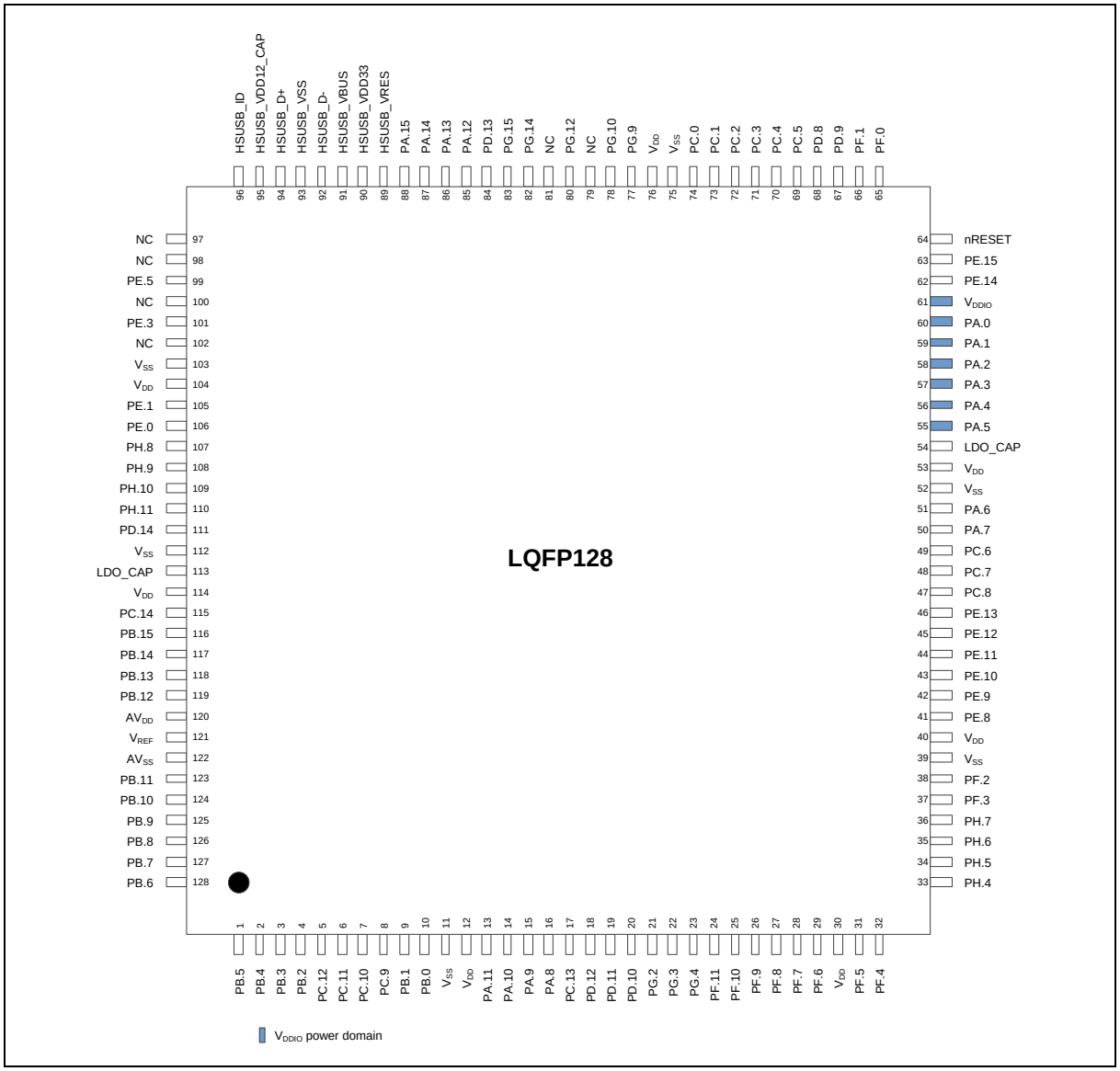

Figure 4.1-11 LQFP-128 Pin Diagram (USB FS + USB HS)

4.1.12 LQFP-144 Pin Diagram

Corresponding Part Number: M487JIDAE

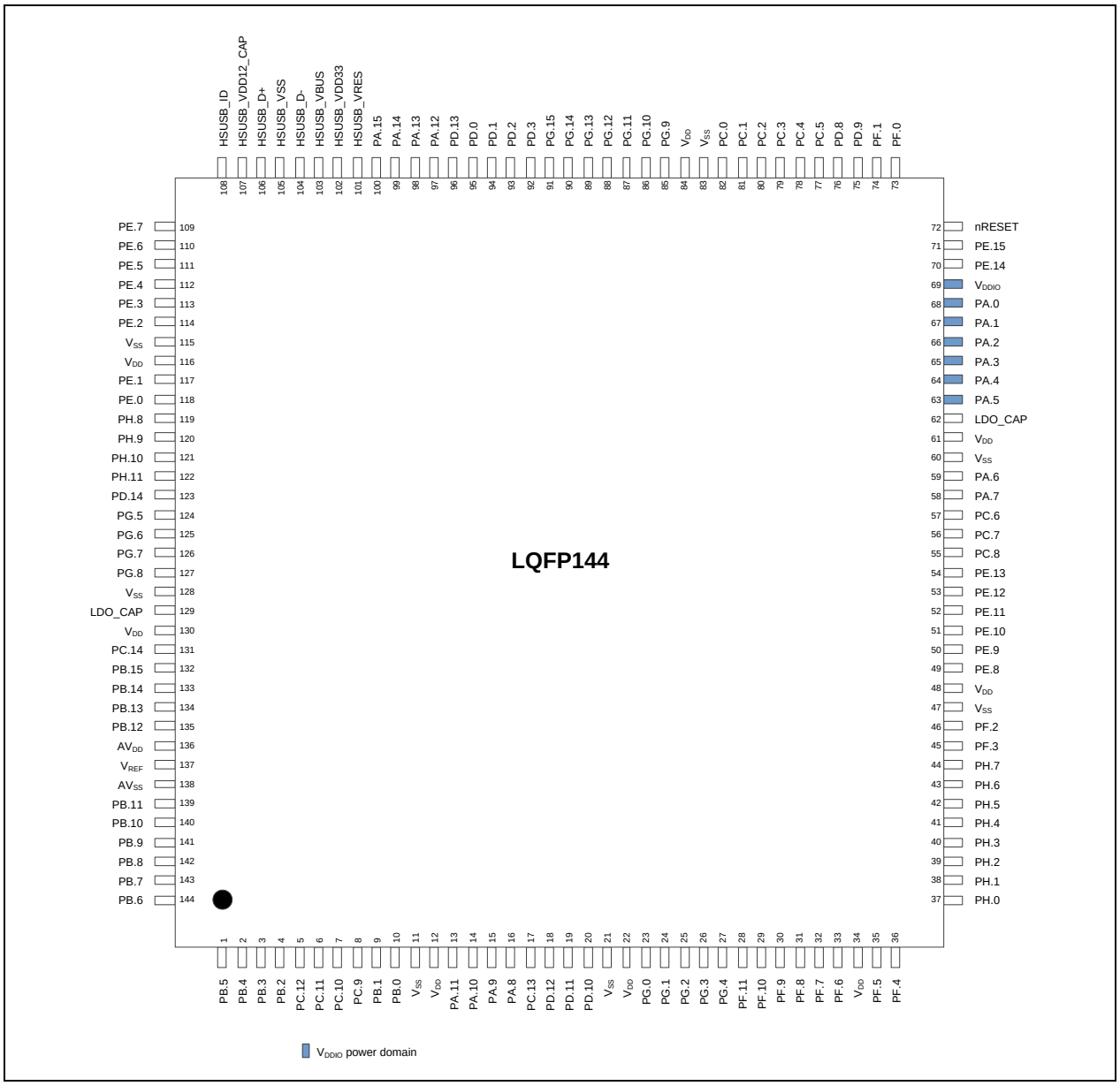

Figure 4.1-12 LQFP-144 Pin Diagram

4.2 M48xxIDAE Pin Description

4.2.1 M481 Series Pin Description

MFP* = Multi-function pin. (Refer to section SYS_GPx_MFPL and SYS_GPx_MFPH)

PA.0 MFP0 means SYS_GPA_MFPL[3:0] = 0x0.

PA.9 MFP5 means SYS_GPA_MFPH[7:4] = 0x5.

32 Pin	48 Pin	64 Pin	Pin Name	Type	MFP	Description
	48	1	PB.6	I/O	MFP0	General purpose digital I/O pin.
			EADC0_CH6	A	MFP1	EADC0 channel 6 analog input.
			EBI_nWRH	O	MFP2	EBI high byte write enable output pin
			USCI1_DAT1	I/O	MFP4	USCI1 data 1 pin.
			UART1_RXD	I	MFP6	UART1 data receiver input pin.
			SD1_CLK	O	MFP7	SD/SDIO1 clock output pin
			EBI_nCS1	O	MFP8	EBI chip select 1 output pin.
			BPWM1_CH5	I/O	MFP10	BPWM1 channel 5 output/capture input.
			EPWM1_BRAKE1	I	MFP11	EPWM1 Brake 1 input pin.
			EPWM1_CH5	I/O	MFP12	EPWM1 channel 5 output/capture input.
			INT4	I	MFP13	External interrupt 4 input pin.
			ACMP1_O	O	MFP15	Analog comparator 1 output pin.
1	1	2	PB.5	I/O	MFP0	General purpose digital I/O pin.
			EADC0_CH5	A	MFP1	EADC0 channel 5 analog input.
			ACMP1_N	A	MFP1	Analog comparator 1 negative input pin.
			EBI_ADR0	O	MFP2	EBI address bus bit 0.
			SD0_DAT3	I/O	MFP3	SD/SDIO0 data line bit 3.
			SPI1_MISO	I/O	MFP5	SPI1 MISO (Master In, Slave Out) pin.
			I^2C0_SCL	I/O	MFP6	I^2C0 clock pin.
			UART5_TXD	O	MFP7	UART5 data transmitter output pin.
			USCI1_CTL0	I/O	MFP8	USCI1 control 0 pin.
			SC0_CLK	O	MFP9	Smart Card 0 clock pin.
			I^2S0_BCLK	O	MFP10	I^2S0 bit clock output pin.
			EPWM0_CH0	I/O	MFP11	EPWM0 channel 0 output/capture input.
			TM0	I/O	MFP14	Timer0 event counter input/toggle output pin.
			INT0	I	MFP15	External interrupt 0 input pin.
2	2	3	PB.4	I/O	MFP0	General purpose digital I/O pin.
			EADC0_CH4	A	MFP1	EADC0 channel 4 analog input.
			ACMP1_P1	A	MFP1	Analog comparator 1 positive input 1 pin.

32 Pin	48 Pin	64 Pin	Pin Name	Type	MFP	Description
			EBI_ADR1	O	MFP2	EBI address bus bit 1.
			SD0_DAT2	I/O	MFP3	SD/SDIO0 data line bit 2.
			SPI1_MOSI	I/O	MFP5	SPI1 MOSI (Master Out, Slave In) pin.
			I^2C0_SDA	I/O	MFP6	I^2C0 data input/output pin.
			UART5_RXD	I	MFP7	UART5 data receiver input pin.
			USCI1_CTL1	I/O	MFP8	USCI1 control 1 pin.
			SC0_DAT	I/O	MFP9	Smart Card 0 data pin.
			I^2S0_MCLK	O	MFP10	I^2S0 master clock output pin.
			EPWM0_CH1	I/O	MFP11	EPWM0 channel 1 output/capture input.
			TM1	I/O	MFP14	Timer1 event counter input/toggle output pin.
			INT1	I	MFP15	External interrupt 1 input pin.
3	3	4	PB.3	I/O	MFP0	General purpose digital I/O pin.
			EADC0_CH3	A	MFP1	EADC0 channel 3 analog input.
			ACMP0_N	A	MFP1	Analog comparator 0 negative input pin.
			EBI_ADR2	O	MFP2	EBI address bus bit 2.
			SD0_DAT1	I/O	MFP3	SD/SDIO0 data line bit 1.
			SPI1_CLK	I/O	MFP5	SPI1 serial clock pin.
			UART1_TXD	O	MFP6	UART1 data transmitter output pin.
			UART5_nRTS	O	MFP7	UART5 request to Send output pin.
			USCI1_DAT1	I/O	MFP8	USCI1 data 1 pin.
			SC0_RST	O	MFP9	Smart Card 0 reset pin.
			I^2S0_DI	I	MFP10	I^2S0 data input pin.
			EPWM0_CH2	I/O	MFP11	EPWM0 channel 2 output/capture input.
			TM2	I/O	MFP14	Timer2 event counter input/toggle output pin.
			INT2	I	MFP15	External interrupt 2 input pin.
4	4	5	PB.2	I/O	MFP0	General purpose digital I/O pin.
			EADC0_CH2	A	MFP1	EADC0 channel 2 analog input.
			ACMP0_P1	A	MFP1	Analog comparator 0 positive input 1 pin.
			OPA0_O	A	MFP1	Operational amplifier 0 output pin.
			EBI_ADR3	O	MFP2	EBI address bus bit 3.
			SD0_DAT0	I/O	MFP3	SD/SDIO0 data line bit 0.
			SPI1_SS	I/O	MFP5	SPI1 slave select pin.
			UART1_RXD	I	MFP6	UART1 data receiver input pin.
			UART5_nCTS	I	MFP7	UART5 clear to Send input pin.

32 Pin	48 Pin	64 Pin	Pin Name	Type	MFP	Description
			USCI1_DAT0	I/O	MFP8	USCI1 data 0 pin.
			SC0_PWR	O	MFP9	Smart Card 0 power pin.
			I²S0_DO	O	MFP10	I²S0 data output pin.
			EPWM0_CH3	I/O	MFP11	EPWM0 channel 3 output/capture input.
			TM3	I/O	MFP14	Timer3 event counter input/toggle output pin.
			INT3	I	MFP15	External interrupt 3 input pin.
5	5	6	PB.1	I/O	MFP0	General purpose digital I/O pin.
			EADC0_CH1	A	MFP1	EADC0 channel 1 analog input.
			OPA0_N	A	MFP1	Operational amplifier 0 negative input pin.
			EBI_ADR8	O	MFP2	EBI address bus bit 8.
			SD0_CLK	O	MFP3	SD/SDIO0 clock output pin
			SPI1_I2SMCLK	I/O	MFP5	SPI1 I²S master clock output pin
			SPI3_I2SMCLK	I/O	MFP6	SPI3 I²S master clock output pin
			UART2_TXD	O	MFP7	UART2 data transmitter output pin.
			USCI1_CLK	I/O	MFP8	USCI1 clock pin.
			I²C1_SCL	I/O	MFP9	I²C1 clock pin.
			I²S0_LRCK	O	MFP10	I²S0 left right channel clock output pin.
			EPWM0_CH4	I/O	MFP11	EPWM0 channel 4 output/capture input.
			EPWM1_CH4	I/O	MFP12	EPWM1 channel 4 output/capture input.
			EPWM0_BRAKE0	I	MFP13	EPWM0 Brake 0 input pin.
6	6	7	PB.0	I/O	MFP0	General purpose digital I/O pin.
			EADC0_CH0	A	MFP1	EADC0 channel 0 analog input.
			OPA0_P	A	MFP1	Operational amplifier 0 positive input pin.
			EBI_ADR9	O	MFP2	EBI address bus bit 9.
			SD0_CMD	I/O	MFP3	SD/SDIO0 command/response pin
			UART2_RXD	I	MFP7	UART2 data receiver input pin.
			SPI0_I2SMCLK	I/O	MFP8	SPI0 I²S master clock output pin
			I²C1_SDA	I/O	MFP9	I²C1 data input/output pin.
			EPWM0_CH5	I/O	MFP11	EPWM0 channel 5 output/capture input.
			EPWM1_CH5	I/O	MFP12	EPWM1 channel 5 output/capture input.
			EPWM0_BRAKE1	I	MFP13	EPWM0 Brake 1 input pin.
	7	8	PA.11	I/O	MFP0	General purpose digital I/O pin.
			ACMP0_P0	A	MFP1	Analog comparator 0 positive input 0 pin.
			EBI_nRD	O	MFP2	EBI read enable output pin.

32 Pin	48 Pin	64 Pin	Pin Name	Type	MFP	Description
			SC2_PWR	O	MFP3	Smart Card 2 power pin.
			SPI2_SS	I/O	MFP4	SPI2 slave select pin.
			SD1_DAT3	I/O	MFP5	SD/SDIO1 data line bit 3.
			USCI0_CLK	I/O	MFP6	USCI0 clock pin.
			I^2C2_SCL	I/O	MFP7	I^2C2 clock pin.
			BPWM0_CH0	I/O	MFP9	BPWM0 channel 0 output/capture input.
			EPWM0_SYNC_OUT	O	MFP10	EPWM0 counter synchronous trigger output pin.
			TM0_EXT	I/O	MFP13	Timer0 event counter input/toggle output pin.
			DAC1_ST	I	MFP14	DAC1 external trigger input.
	8	9	PA.10	I/O	MFP0	General purpose digital I/O pin.
			ACMP1_P0	A	MFP1	Analog comparator 1 positive input 0 pin.
			OPA1_O	A	MFP1	Operational amplifier 1 output pin.
			EBI_nWR	O	MFP2	EBI write enable output pin.
			SC2_RST	O	MFP3	Smart Card 2 reset pin.
			SPI2_CLK	I/O	MFP4	SPI2 serial clock pin.
			SD1_DAT2	I/O	MFP5	SD/SDIO1 data line bit 2.
			USCI0_DAT0	I/O	MFP6	USCI0 data 0 pin.
			I^2C2_SDA	I/O	MFP7	I^2C2 data input/output pin.
			BPWM0_CH1	I/O	MFP9	BPWM0 channel 1 output/capture input.
			QEI1_INDEX	I	MFP10	Quadrature encoder 1 index input
			ECAP0_IC0	I	MFP11	Enhanced capture unit 0 input 0 pin.
			TM1_EXT	I/O	MFP13	Timer1 event counter input/toggle output pin.
			DAC0_ST	I	MFP14	DAC0 external trigger input.
	9	10	PA.9	I/O	MFP0	General purpose digital I/O pin.
			OPA1_N	A	MFP1	Operational amplifier 1 negative input pin.
			EBI_MCLK	O	MFP2	EBI external clock output pin.
			SC2_DAT	I/O	MFP3	Smart Card 2 data pin.
			SPI2_MISO	I/O	MFP4	SPI2 MISO (Master In, Slave Out) pin.
			SD1_DAT1	I/O	MFP5	SD/SDIO1 data line bit 1.
			USCI0_DAT1	I/O	MFP6	USCI0 data 1 pin.
			UART1_TXD	O	MFP7	UART1 data transmitter output pin.
			BPWM0_CH2	I/O	MFP9	BPWM0 channel 2 output/capture input.
			QEI1_A	I	MFP10	Quadrature encoder 1 phase A input

32 Pin	48 Pin	64 Pin	Pin Name	Type	MFP	Description
			ECAP0_IC1	I	MFP11	Enhanced capture unit 0 input 1 pin.
			TM2_EXT	I/O	MFP13	Timer2 event counter input/toggle output pin.
	10	11	PA.8	I/O	MFP0	General purpose digital I/O pin.
			OPA1_P	A	MFP1	Operational amplifier 1 positive input pin.
			EBI_ALE	O	MFP2	EBI address latch enable output pin.
			SC2_CLK	O	MFP3	Smart Card 2 clock pin.
			SPI2_MOSI	I/O	MFP4	SPI2 MOSI (Master Out, Slave In) pin.
			SD1_DAT0	I/O	MFP5	SD/SDIO1 data line bit 0.
			USCI0_CTL1	I/O	MFP6	USCI0 control 1 pin.
			UART1_RXD	I	MFP7	UART1 data receiver input pin.
			BPWM0_CH3	I/O	MFP9	BPWM0 channel 3 output/capture input.
			QEI1_B	I	MFP10	Quadrature encoder 1 phase B input
			ECAP0_IC2	I	MFP11	Enhanced capture unit 0 input 2 pin.
			TM3_EXT	I/O	MFP13	Timer3 event counter input/toggle output pin.
			INT4	I	MFP15	External interrupt 4 input pin.
		12	PF.6	I/O	MFP0	General purpose digital I/O pin.
			EBI_ADR19	O	MFP2	EBI address bus bit 19.
			SC0_CLK	O	MFP3	Smart Card 0 clock pin.
			I^2S0_LRCK	O	MFP4	I^2S0 left right channel clock output pin.
			SPI0_MOSI	I/O	MFP5	SPI0 MOSI (Master Out, Slave In) pin.
			UART4_RXD	I	MFP6	UART4 data receiver input pin.
			EBI_nCS0	O	MFP7	EBI chip select 0 output pin.
			TAMPER0	I/O	MFP10	TAMPER detector loop pin 0.
		13	V_{DD}	P	MFP0	Power supply for I/O ports and LDO source for internal PLL and digital circuit.
7	11	14	PF.5	I/O	MFP0	General purpose digital I/O pin.
			UART2_RXD	I	MFP2	UART2 data receiver input pin.
			UART2_nCTS	I	MFP4	UART2 clear to Send input pin.
			BPWM0_CH4	I/O	MFP8	BPWM0 channel 4 output/capture input.
			EPWM0_SYNC_OUT	O	MFP9	EPWM0 counter synchronous trigger output pin.
			X32_IN	I	MFP10	External 32.768 kHz crystal input pin.
			EADC0_ST	I	MFP11	EADC0 external trigger input.
8	12	15	PF.4	I/O	MFP0	General purpose digital I/O pin.

32 Pin	48 Pin	64 Pin	Pin Name	Type	MFP	Description
			UART2_TXD	O	MFP2	UART2 data transmitter output pin.
			UART2_nRTS	O	MFP4	UART2 request to Send output pin.
			BPWM0_CH5	I/O	MFP8	BPWM0 channel 5 output/capture input.
			X32_OUT	O	MFP10	External 32.768 kHz crystal output pin.
9	13	16	PF.3	I/O	MFP0	General purpose digital I/O pin.
			EBI_nCS0	O	MFP2	EBI chip select 0 output pin.
			UART0_TXD	O	MFP3	UART0 data transmitter output pin.
			I^2C0_SCL	I/O	MFP4	I^2C0 clock pin.
			XT1_IN	I	MFP10	External 4~24 MHz (high speed) crystal input pin.
			BPWM1_CH0	I/O	MFP11	BPWM1 channel 0 output/capture input.
10	14	17	PF.2	I/O	MFP0	General purpose digital I/O pin.
			EBI_nCS1	O	MFP2	EBI chip select 1 output pin.
			UART0_RXD	I	MFP3	UART0 data receiver input pin.
			I^2C0_SDA	I/O	MFP4	I^2C0 data input/output pin.
			QSPI0_CLK	I/O	MFP5	QSPI0 serial clock pin.
			XT1_OUT	O	MFP10	External 4~24 MHz (high speed) crystal output pin.
			BPWM1_CH1	I/O	MFP11	BPWM1 channel 1 output/capture input.
		18	PC.7	I/O	MFP0	General purpose digital I/O pin.
			EBI_AD9	I/O	MFP2	EBI address/data bus bit 9.
			SPI1_MISO	I/O	MFP4	SPI1 MISO (Master In, Slave Out) pin.
			UART4_TXD	O	MFP5	UART4 data transmitter output pin.
			SC2_PWR	O	MFP6	Smart Card 2 power pin.
			UART0_nCTS	I	MFP7	UART0 clear to Send input pin.
			I^2C1_SMBAL	O	MFP8	I^2C1 SMBus SMBALTER pin
			EPWM1_CH2	I/O	MFP11	EPWM1 channel 2 output/capture input.
			BPWM1_CH0	I/O	MFP12	BPWM1 channel 0 output/capture input.
			TM0	I/O	MFP14	Timer0 event counter input/toggle output pin.
			INT3	I	MFP15	External interrupt 3 input pin.
		19	PC.6	I/O	MFP0	General purpose digital I/O pin.
			EBI_AD8	I/O	MFP2	EBI address/data bus bit 8.
			SPI1_MOSI	I/O	MFP4	SPI1 MOSI (Master Out, Slave In) pin.
			UART4_RXD	I	MFP5	UART4 data receiver input pin.
			SC2_RST	O	MFP6	Smart Card 2 reset pin.
			UART0_nRTS	O	MFP7	UART0 request to Send output pin.

32 Pin	48 Pin	64 Pin	Pin Name	Type	MFP	Description
			I²C1_SMBSUS	O	MFP8	I²C1 SMBus SMBSUS pin (PMBus CONTROL pin)
			EPWM1_CH3	I/O	MFP11	EPWM1 channel 3 output/capture input.
			BPWM1_CH1	I/O	MFP12	BPWM1 channel 1 output/capture input.
			TM1	I/O	MFP14	Timer1 event counter input/toggle output pin.
			INT2	I	MFP15	External interrupt 2 input pin.
	15	20	PA.7	I/O	MFP0	General purpose digital I/O pin.
			EBI_AD7	I/O	MFP2	EBI address/data bus bit 7.
			SPI1_CLK	I/O	MFP4	SPI1 serial clock pin.
			SC2_DAT	I/O	MFP6	Smart Card 2 data pin.
			UART0_TXD	O	MFP7	UART0 data transmitter output pin.
			I²C1_SCL	I/O	MFP8	I²C1 clock pin.
			EPWM1_CH4	I/O	MFP11	EPWM1 channel 4 output/capture input.
			BPWM1_CH2	I/O	MFP12	BPWM1 channel 2 output/capture input.
			ACMP0_WLAT	I	MFP13	Analog comparator 0 window latch input pin
			TM2	I/O	MFP14	Timer2 event counter input/toggle output pin.
			INT1	I	MFP15	External interrupt 1 input pin.
	16	21	PA.6	I/O	MFP0	General purpose digital I/O pin.
			EBI_AD6	I/O	MFP2	EBI address/data bus bit 6.
			SPI1_SS	I/O	MFP4	SPI1 slave select pin.
			SD1_nCD	I	MFP5	SD/SDIO1 card detect input pin
			SC2_CLK	O	MFP6	Smart Card 2 clock pin.
			UART0_RXD	I	MFP7	UART0 data receiver input pin.
			I²C1_SDA	I/O	MFP8	I²C1 data input/output pin.
			EPWM1_CH5	I/O	MFP11	EPWM1 channel 5 output/capture input.
			BPWM1_CH3	I/O	MFP12	BPWM1 channel 3 output/capture input.
			ACMP1_WLAT	I	MFP13	Analog comparator 1 window latch input pin
			TM3	I/O	MFP14	Timer3 event counter input/toggle output pin.
			INT0	I	MFP15	External interrupt 0 input pin.
		22	V_{SS}	P	MFP0	Ground pin for digital circuit.
		23	V_{DD}	P	MFP0	Power supply for I/O ports and LDO source for internal PLL and digital circuit.
		24	LDO_CAP	A	MFP0	LDO output pin. **Note:** This pin needs to be connected with an external capacitor.
	17	25	PA.5	I/O	MFP0	General purpose digital I/O pin.

32 Pin	48 Pin	64 Pin	Pin Name	Type	MFP	Description
			SPIM_D2	I/O	MFP2	SPIM data 2 pin for Quad Mode I/O.
			QSPI0_MISO1	I/O	MFP3	QSPI0 MISO1 (Master In, Slave Out) pin.
			SPI1_I2SMCLK	I/O	MFP4	SPI1 I^2S master clock output pin
			SD1_CMD	I/O	MFP5	SD/SDIO1 command/response pin
			SC2_nCD	I	MFP6	Smart Card 2 card detect pin.
			UART0_nCTS	I	MFP7	UART0 clear to Send input pin.
			UART5_TXD	O	MFP8	UART5 data transmitter output pin.
			I^2C0_SCL	I/O	MFP9	I^2C0 clock pin.
			BPWM0_CH5	I/O	MFP12	BPWM0 channel 5 output/capture input.
			EPWM0_CH0	I/O	MFP13	EPWM0 channel 0 output/capture input.
			QEI0_INDEX	I	MFP14	Quadrature encoder 0 index input
	18	26	PA.4	I/O	MFP0	General purpose digital I/O pin.
			SPIM_D3	I/O	MFP2	SPIM data 3 pin for Quad Mode I/O.
			QSPI0_MOSI1	I/O	MFP3	QSPI0 MOSI1 (Master Out, Slave In) pin.
			SPI0_I2SMCLK	I/O	MFP4	SPI0 I^2S master clock output pin
			SD1_CLK	O	MFP5	SD/SDIO1 clock output pin
			SC0_nCD	I	MFP6	Smart Card 0 card detect pin.
			UART0_nRTS	O	MFP7	UART0 request to Send output pin.
			UART5_RXD	I	MFP8	UART5 data receiver input pin.
			I^2C0_SDA	I/O	MFP9	I^2C0 data input/output pin.
			BPWM0_CH4	I/O	MFP12	BPWM0 channel 4 output/capture input.
			EPWM0_CH1	I/O	MFP13	EPWM0 channel 1 output/capture input.
			QEI0_A	I	MFP14	Quadrature encoder 0 phase A input
11	19	27	PA.3	I/O	MFP0	General purpose digital I/O pin.
			SPIM_SS	I/O	MFP2	SPIM slave select pin.
			QSPI0_SS	I/O	MFP3	QSPI0 slave select pin.
			SPI0_SS	I/O	MFP4	SPI0 slave select pin.
			SD1_DAT3	I/O	MFP5	SD/SDIO1 data line bit 3.
			SC0_PWR	O	MFP6	Smart Card 0 power pin.
			UART4_TXD	O	MFP7	UART4 data transmitter output pin.
			UART1_TXD	O	MFP8	UART1 data transmitter output pin.
			I^2C1_SCL	I/O	MFP9	I^2C1 clock pin.
			BPWM0_CH3	I/O	MFP12	BPWM0 channel 3 output/capture input.
			EPWM0_CH2	I/O	MFP13	EPWM0 channel 2 output/capture input.

32 Pin	48 Pin	64 Pin	Pin Name	Type	MFP	Description
			QEI0_B	I	MFP14	Quadrature encoder 0 phase B input
12	20	28	PA.2	I/O	MFP0	General purpose digital I/O pin.
			SPIM_CLK	I/O	MFP2	SPIM serial clock pin.
			QSPI0_CLK	I/O	MFP3	QSPI0 serial clock pin.
			SPI0_CLK	I/O	MFP4	SPI0 serial clock pin.
			SD1_DAT2	I/O	MFP5	SD/SDIO1 data line bit 2.
			SC0_RST	O	MFP6	Smart Card 0 reset pin.
			UART4_RXD	I	MFP7	UART4 data receiver input pin.
			UART1_RXD	I	MFP8	UART1 data receiver input pin.
			I^2C1_SDA	I/O	MFP9	I^2C1 data input/output pin.
			BPWM0_CH2	I/O	MFP12	BPWM0 channel 2 output/capture input.
			EPWM0_CH3	I/O	MFP13	EPWM0 channel 3 output/capture input.
13	21	29	PA.1	I/O	MFP0	General purpose digital I/O pin.
			SPIM_MISO	I/O	MFP2	SPIM MISO (Master In, Slave Out) pin.
			QSPI0_MISO0	I/O	MFP3	QSPI0 MISO0 (Master In, Slave Out) pin.
			SPI0_MISO	I/O	MFP4	SPI0 MISO (Master In, Slave Out) pin.
			SD1_DAT1	I/O	MFP5	SD/SDIO1 data line bit 1.
			SC0_DAT	I/O	MFP6	Smart Card 0 data pin.
			UART0_TXD	O	MFP7	UART0 data transmitter output pin.
			UART1_nCTS	I	MFP8	UART1 clear to Send input pin.
			I^2C2_SCL	I/O	MFP9	I^2C2 clock pin.
			BPWM0_CH1	I/O	MFP12	BPWM0 channel 1 output/capture input.
			EPWM0_CH4	I/O	MFP13	EPWM0 channel 4 output/capture input.
			DAC1_ST	I	MFP15	DAC1 external trigger input.
14	22	30	PA.0	I/O	MFP0	General purpose digital I/O pin.
			SPIM_MOSI	I/O	MFP2	SPIM MOSI (Master Out, Slave In) pin.
			QSPI0_MOSI0	I/O	MFP3	QSPI0 MOSI0 (Master Out, Slave In) pin.
			SPI0_MOSI	I/O	MFP4	SPI0 MOSI (Master Out, Slave In) pin.
			SD1_DAT0	I/O	MFP5	SD/SDIO1 data line bit 0.
			SC0_CLK	O	MFP6	Smart Card 0 clock pin.
			UART0_RXD	I	MFP7	UART0 data receiver input pin.
			UART1_nRTS	O	MFP8	UART1 request to Send output pin.
			I^2C2_SDA	I/O	MFP9	I^2C2 data input/output pin.
			BPWM0_CH0	I/O	MFP12	BPWM0 channel 0 output/capture input.

32 Pin	48 Pin	64 Pin	Pin Name	Type	MFP	Description
			EPWM0_CH5	I/O	MFP13	EPWM0 channel 5 output/capture input.
			DAC0_ST	I	MFP15	DAC0 external trigger input.
15	23	31	V_{DDIO}	P	MFP0	Power supply for PA.0~PA.5.
16	24	32	nRESET	I	MFP0	External reset input: active LOW, with an internal pull-up. Set this pin low reset to initial state. **Note:** It is recommended to use 10 kΩ pull-up resistor and 10 uF capacitor on nRESET pin.
17	25	33	PF.0	I/O	MFP0	General purpose digital I/O pin.
			UART1_TXD	O	MFP2	UART1 data transmitter output pin.
			I^2C1_SCL	I/O	MFP3	I^2C1 clock pin.
			BPWM1_CH0	I/O	MFP12	BPWM1 channel 0 output/capture input.
			ICE_DAT	O	MFP14	Serial wired debugger data pin. **Note:** It is recommended to use 100 kΩ pull-up resistor on ICE_DAT pin.
18	26	34	PF.1	I/O	MFP0	General purpose digital I/O pin.
			UART1_RXD	I	MFP2	UART1 data receiver input pin.
			I^2C1_SDA	I/O	MFP3	I^2C1 data input/output pin.
			BPWM1_CH1	I/O	MFP12	BPWM1 channel 1 output/capture input.
			ICE_CLK	I	MFP14	Serial wired debugger clock pin. **Note:** It is recommended to use 100 kΩ pull-up resistor on ICE_CLK pin.
	27	35	PC.5	I/O	MFP0	General purpose digital I/O pin.
			EBI_AD5	I/O	MFP2	EBI address/data bus bit 5.
			SPIM_D2	I/O	MFP3	SPIM data 2 pin for Quad Mode I/O.
			QSPI0_MISO1	I/O	MFP4	QSPI0 MISO1 (Master In, Slave Out) pin.
			UART2_TXD	O	MFP8	UART2 data transmitter output pin.
			I^2C1_SCL	I/O	MFP9	I^2C1 clock pin.
			UART4_TXD	O	MFP11	UART4 data transmitter output pin.
			EPWM1_CH0	I/O	MFP12	EPWM1 channel 0 output/capture input.
	28	36	PC.4	I/O	MFP0	General purpose digital I/O pin.
			EBI_AD4	I/O	MFP2	EBI address/data bus bit 4.
			SPIM_D3	I/O	MFP3	SPIM data 3 pin for Quad Mode I/O.
			QSPI0_MOSI1	I/O	MFP4	QSPI0 MOSI1 (Master Out, Slave In) pin.
			SC1_nCD	I	MFP5	Smart Card 1 card detect pin.
			I^2S0_BCLK	O	MFP6	I^2S0 bit clock output pin.
			SPI1_I2SMCLK	I/O	MFP7	SPI1 I^2S master clock output pin
			UART2_RXD	I	MFP8	UART2 data receiver input pin.

32 Pin	48 Pin	64 Pin	Pin Name	Type	MFP	Description
			I²C1_SDA	I/O	MFP9	I²C1 data input/output pin.
			UART4_RXD	I	MFP11	UART4 data receiver input pin.
			EPWM1_CH1	I/O	MFP12	EPWM1 channel 1 output/capture input.
	29	37	PC.3	I/O	MFP0	General purpose digital I/O pin.
			EBI_AD3	I/O	MFP2	EBI address/data bus bit 3.
			SPIM_SS	I/O	MFP3	SPIM slave select pin.
			QSPI0_SS	I/O	MFP4	QSPI0 slave select pin.
			SC1_PWR	O	MFP5	Smart Card 1 power pin.
			I²S0_MCLK	O	MFP6	I²S0 master clock output pin.
			SPI1_MISO	I/O	MFP7	SPI1 MISO (Master In, Slave Out) pin.
			UART2_nRTS	O	MFP8	UART2 request to Send output pin.
			I²C0_SMBAL	O	MFP9	I²C0 SMBus SMBALTER pin
			UART3_TXD	O	MFP11	UART3 data transmitter output pin.
			EPWM1_CH2	I/O	MFP12	EPWM1 channel 2 output/capture input.
	30	38	PC.2	I/O	MFP0	General purpose digital I/O pin.
			EBI_AD2	I/O	MFP2	EBI address/data bus bit 2.
			SPIM_CLK	I/O	MFP3	SPIM serial clock pin.
			QSPI0_CLK	I/O	MFP4	QSPI0 serial clock pin.
			SC1_RST	O	MFP5	Smart Card 1 reset pin.
			I²S0_DI	I	MFP6	I²S0 data input pin.
			SPI1_MOSI	I/O	MFP7	SPI1 MOSI (Master Out, Slave In) pin.
			UART2_nCTS	I	MFP8	UART2 clear to Send input pin.
			I²C0_SMBSUS	O	MFP9	I²C0 SMBus SMBSUS pin (PMBus CONTROL pin)
			UART3_RXD	I	MFP11	UART3 data receiver input pin.
			EPWM1_CH3	I/O	MFP12	EPWM1 channel 3 output/capture input.
19	31	39	PC.1	I/O	MFP0	General purpose digital I/O pin.
			EBI_AD1	I/O	MFP2	EBI address/data bus bit 1.
			SPIM_MISO	I/O	MFP3	SPIM MISO (Master In, Slave Out) pin.
			QSPI0_MISO0	I/O	MFP4	QSPI0 MISO0 (Master In, Slave Out) pin.
			SC1_DAT	I/O	MFP5	Smart Card 1 data pin.
			I²S0_DO	O	MFP6	I²S0 data output pin.
			SPI1_CLK	I/O	MFP7	SPI1 serial clock pin.
			UART2_TXD	O	MFP8	UART2 data transmitter output pin.
			I²C0_SCL	I/O	MFP9	I²C0 clock pin.

32 Pin	48 Pin	64 Pin	Pin Name	Type	MFP	Description
			EPWM1_CH4	I/O	MFP12	EPWM1 channel 4 output/capture input.
			ACMP0_O	O	MFP14	Analog comparator 0 output pin.
20	32	40	PC.0	I/O	MFP0	General purpose digital I/O pin.
			EBI_AD0	I/O	MFP2	EBI address/data bus bit 0.
			SPIM_MOSI	I/O	MFP3	SPIM MOSI (Master Out, Slave In) pin.
			QSPI0_MOSI0	I/O	MFP4	QSPI0 MOSI0 (Master Out, Slave In) pin.
			SC1_CLK	O	MFP5	Smart Card 1 clock pin.
			I^2S0_LRCK	O	MFP6	I^2S0 left right channel clock output pin.
			SPI1_SS	I/O	MFP7	SPI1 slave select pin.
			UART2_RXD	I	MFP8	UART2 data receiver input pin.
			I^2C0_SDA	I/O	MFP9	I^2C0 data input/output pin.
			EPWM1_CH5	I/O	MFP12	EPWM1 channel 5 output/capture input.
			ACMP1_O	O	MFP14	Analog comparator 1 output pin.
		41	PD.3	I/O	MFP0	General purpose digital I/O pin.
			EBI_AD10	I/O	MFP2	EBI address/data bus bit 10.
			USCI0_CTL1	I/O	MFP3	USCI0 control 1 pin.
			SPI0_SS	I/O	MFP4	SPI0 slave select pin.
			UART3_nRTS	O	MFP5	UART3 request to Send output pin.
			USCI1_CTL0	I/O	MFP6	USCI1 control 0 pin.
			SC2_PWR	O	MFP7	Smart Card 2 power pin.
			SC1_nCD	I	MFP8	Smart Card 1 card detect pin.
			UART0_TXD	O	MFP9	UART0 data transmitter output pin.
		42	PD.2	I/O	MFP0	General purpose digital I/O pin.
			EBI_AD11	I/O	MFP2	EBI address/data bus bit 11.
			USCI0_DAT1	I/O	MFP3	USCI0 data 1 pin.
			SPI0_CLK	I/O	MFP4	SPI0 serial clock pin.
			UART3_nCTS	I	MFP5	UART3 clear to Send input pin.
			SC2_RST	O	MFP7	Smart Card 2 reset pin.
			UART0_RXD	I	MFP9	UART0 data receiver input pin.
		43	PD.1	I/O	MFP0	General purpose digital I/O pin.
			EBI_AD12	I/O	MFP2	EBI address/data bus bit 12.
			USCI0_DAT0	I/O	MFP3	USCI0 data 0 pin.
			SPI0_MISO	I/O	MFP4	SPI0 MISO (Master In, Slave Out) pin.
			UART3_TXD	O	MFP5	UART3 data transmitter output pin.

32 Pin	48 Pin	64 Pin	Pin Name	Type	MFP	Description
			I²C2_SCL	I/O	MFP6	I²C2 clock pin.
			SC2_DAT	I/O	MFP7	Smart Card 2 data pin.
		44	PD.0	I/O	MFP0	General purpose digital I/O pin.
			EBI_AD13	I/O	MFP2	EBI address/data bus bit 13.
			USCI0_CLK	I/O	MFP3	USCI0 clock pin.
			SPI0_MOSI	I/O	MFP4	SPI0 MOSI (Master Out, Slave In) pin.
			UART3_RXD	I	MFP5	UART3 data receiver input pin.
			I²C2_SDA	I/O	MFP6	I²C2 data input/output pin.
			SC2_CLK	O	MFP7	Smart Card 2 clock pin.
			TM2	I/O	MFP14	Timer2 event counter input/toggle output pin.
21	33	45	PA.12	I/O	MFP0	General purpose digital I/O pin.
			I²S0_BCLK	O	MFP2	I²S0 bit clock output pin.
			UART4_TXD	O	MFP3	UART4 data transmitter output pin.
			I²C1_SCL	I/O	MFP4	I²C1 clock pin.
			SPI2_SS	I/O	MFP5	SPI2 slave select pin.
			SC2_PWR	O	MFP7	Smart Card 2 power pin.
			BPWM1_CH2	I/O	MFP11	BPWM1 channel 2 output/capture input.
			QEI1_INDEX	I	MFP12	Quadrature encoder 1 index input
22	34	46	PA.13	I/O	MFP0	General purpose digital I/O pin.
			I²S0_MCLK	O	MFP2	I²S0 master clock output pin.
			UART4_RXD	I	MFP3	UART4 data receiver input pin.
			I²C1_SDA	I/O	MFP4	I²C1 data input/output pin.
			SPI2_CLK	I/O	MFP5	SPI2 serial clock pin.
			SC2_RST	O	MFP7	Smart Card 2 reset pin.
			BPWM1_CH3	I/O	MFP11	BPWM1 channel 3 output/capture input.
			QEI1_A	I	MFP12	Quadrature encoder 1 phase A input
23	35	47	PA.14	I/O	MFP0	General purpose digital I/O pin.
			I²S0_DI	I	MFP2	I²S0 data input pin.
			UART0_TXD	O	MFP3	UART0 data transmitter output pin.
			SPI2_MISO	I/O	MFP5	SPI2 MISO (Master In, Slave Out) pin.
			I²C2_SCL	I/O	MFP6	I²C2 clock pin.
			SC2_DAT	I/O	MFP7	Smart Card 2 data pin.
			BPWM1_CH4	I/O	MFP11	BPWM1 channel 4 output/capture input.
			QEI1_B	I	MFP12	Quadrature encoder 1 phase B input

32 Pin	48 Pin	64 Pin	Pin Name	Type	MFP	Description
24	36	48	PA.15	I/O	MFP0	General purpose digital I/O pin.
			I^2S0_DO	O	MFP2	I^2S0 data output pin.
			UART0_RXD	I	MFP3	UART0 data receiver input pin.
			SPI2_MOSI	I/O	MFP5	SPI2 MOSI (Master Out, Slave In) pin.
			I^2C2_SDA	I/O	MFP6	I^2C2 data input/output pin.
			SC2_CLK	O	MFP7	Smart Card 2 clock pin.
			BPWM1_CH5	I/O	MFP11	BPWM1 channel 5 output/capture input.
			EPWM0_SYNC_IN	I	MFP12	EPWM0 counter synchronous trigger input pin.
25	37	49	V_{SS}	P	MFP0	Ground pin for digital circuit.
26	38	50	LDO_CAP	A	MFP0	LDO output pin. **Note:** This pin needs to be connected with an external capacitor.
27	39	51	V_{DD}	P	MFP0	Power supply for I/O ports and LDO source for internal PLL and digital circuit.
	40	52	PC.14	I/O	MFP0	General purpose digital I/O pin.
			EBI_AD11	I/O	MFP2	EBI address/data bus bit 11.
			SC1_nCD	I	MFP3	Smart Card 1 card detect pin.
			SPI0_I2SMCLK	I/O	MFP4	SPI0 I^2S master clock output pin
			USCI0_CTL0	I/O	MFP5	USCI0 control 0 pin.
			QSPI0_CLK	I/O	MFP6	QSPI0 serial clock pin.
			EPWM0_SYNC_IN	I	MFP11	EPWM0 counter synchronous trigger input pin.
			TM1	I/O	MFP13	Timer1 event counter input/toggle output pin.
28	41	53	PB.15	I/O	MFP0	General purpose digital I/O pin.
			EADC0_CH15	A	MFP1	EADC0 channel 15 analog input.
			EBI_AD12	I/O	MFP2	EBI address/data bus bit 12.
			SC1_PWR	O	MFP3	Smart Card 1 power pin.
			SPI0_SS	I/O	MFP4	SPI0 slave select pin.
			USCI0_CTL1	I/O	MFP5	USCI0 control 1 pin.
			UART0_nCTS	I	MFP6	UART0 clear to Send input pin.
			UART3_TXD	O	MFP7	UART3 data transmitter output pin.
			I^2C2_SMBAL	O	MFP8	I^2C2 SMBus SMBALTER pin
			EPWM1_CH0	I/O	MFP11	EPWM1 channel 0 output/capture input.
			TM0_EXT	I/O	MFP13	Timer0 event counter input/toggle output pin.
29	42	54	PB.14	I/O	MFP0	General purpose digital I/O pin.
			EADC0_CH14	A	MFP1	EADC0 channel 14 analog input.

32 Pin	48 Pin	64 Pin	Pin Name	Type	MFP	Description
			EBI_AD13	I/O	MFP2	EBI address/data bus bit 13.
			SC1_RST	O	MFP3	Smart Card 1 reset pin.
			SPI0_CLK	I/O	MFP4	SPI0 serial clock pin.
			USCI0_DAT1	I/O	MFP5	USCI0 data 1 pin.
			UART0_nRTS	O	MFP6	UART0 request to Send output pin.
			UART3_RXD	I	MFP7	UART3 data receiver input pin.
			I²C2_SMBSUS	O	MFP8	I²C2 SMBus SMBSUS pin (PMBus CONTROL pin)
			EPWM1_CH1	I/O	MFP11	EPWM1 channel 1 output/capture input.
			TM1_EXT	I/O	MFP13	Timer1 event counter input/toggle output pin.
			CLKO	O	MFP14	Clock Out
30	43	55	PB.13	I/O	MFP0	General purpose digital I/O pin.
			EADC0_CH13	A	MFP1	EADC0 channel 13 analog input.
			DAC1_OUT	A	MFP1	DAC1 channel analog output.
			ACMP0_P3	A	MFP1	Analog comparator 0 positive input 3 pin.
			ACMP1_P3	A	MFP1	Analog comparator 1 positive input 3 pin.
			EBI_AD14	I/O	MFP2	EBI address/data bus bit 14.
			SC1_DAT	I/O	MFP3	Smart Card 1 data pin.
			SPI0_MISO	I/O	MFP4	SPI0 MISO (Master In, Slave Out) pin.
			USCI0_DAT0	I/O	MFP5	USCI0 data 0 pin.
			UART0_TXD	O	MFP6	UART0 data transmitter output pin.
			UART3_nRTS	O	MFP7	UART3 request to Send output pin.
			I²C2_SCL	I/O	MFP8	I²C2 clock pin.
			EPWM1_CH2	I/O	MFP11	EPWM1 channel 2 output/capture input.
			TM2_EXT	I/O	MFP13	Timer2 event counter input/toggle output pin.
31	44	56	PB.12	I/O	MFP0	General purpose digital I/O pin.
			EADC0_CH12	A	MFP1	EADC0 channel 12 analog input.
			DAC0_OUT	A	MFP1	DAC0 channel analog output.
			ACMP0_P2	A	MFP1	Analog comparator 0 positive input 2 pin.
			ACMP1_P2	A	MFP1	Analog comparator 1 positive input 2 pin.
			EBI_AD15	I/O	MFP2	EBI address/data bus bit 15.
			SC1_CLK	O	MFP3	Smart Card 1 clock pin.
			SPI0_MOSI	I/O	MFP4	SPI0 MOSI (Master Out, Slave In) pin.
			USCI0_CLK	I/O	MFP5	USCI0 clock pin.
			UART0_RXD	I	MFP6	UART0 data receiver input pin.

32 Pin	48 Pin	64 Pin	Pin Name	Type	MFP	Description
			UART3_nCTS	I	MFP7	UART3 clear to Send input pin.
			I^2C2_SDA	I/O	MFP8	I^2C2 data input/output pin.
			SD0_nCD	I	MFP9	SD/SDIO0 card detect input pin
			EPWM1_CH3	I/O	MFP11	EPWM1 channel 3 output/capture input.
			TM3_EXT	I/O	MFP13	Timer3 event counter input/toggle output pin.
32	45	57	AV_{DD}	P	MFP0	Power supply for internal analog circuit.
		58	V_{REF}	A	MFP0	ADC reference voltage input. **Note:** This pin needs to be connected with a 1uF capacitor.
	46	59	AV_{SS}	P	MFP0	Ground pin for analog circuit.
		60	PB.11	I/O	MFP0	General purpose digital I/O pin.
			EADC0_CH11	A	MFP1	EADC0 channel 11 analog input.
			EBI_ADR16	O	MFP2	EBI address bus bit 16.
			UART0_nCTS	I	MFP5	UART0 clear to Send input pin.
			UART4_TXD	O	MFP6	UART4 data transmitter output pin.
			I^2C1_SCL	I/O	MFP7	I^2C1 clock pin.
			SPI0_I2SMCLK	I/O	MFP9	SPI0 I^2S master clock output pin
			BPWM1_CH0	I/O	MFP10	BPWM1 channel 0 output/capture input.
			SPI3_CLK	I/O	MFP11	SPI3 serial clock pin.
		61	PB.10	I/O	MFP0	General purpose digital I/O pin.
			EADC0_CH10	A	MFP1	EADC0 channel 10 analog input.
			EBI_ADR17	O	MFP2	EBI address bus bit 17.
			USCI1_CTL0	I/O	MFP4	USCI1 control 0 pin.
			UART0_nRTS	O	MFP5	UART0 request to Send output pin.
			UART4_RXD	I	MFP6	UART4 data receiver input pin.
			I^2C1_SDA	I/O	MFP7	I^2C1 data input/output pin.
			BPWM1_CH1	I/O	MFP10	BPWM1 channel 1 output/capture input.
			SPI3_SS	I/O	MFP11	SPI3 slave select pin.
		62	PB.9	I/O	MFP0	General purpose digital I/O pin.
			EADC0_CH9	A	MFP1	EADC0 channel 9 analog input.
			EBI_ADR18	O	MFP2	EBI address bus bit 18.
			USCI1_CTL1	I/O	MFP4	USCI1 control 1 pin.
			UART0_TXD	O	MFP5	UART0 data transmitter output pin.
			UART1_nCTS	I	MFP6	UART1 clear to Send input pin.
			I^2C1_SMBAL	O	MFP7	I^2C1 SMBus SMBALTER pin

32 Pin	48 Pin	64 Pin	Pin Name	Type	MFP	Description
			BPWM1_CH2	I/O	MFP10	BPWM1 channel 2 output/capture input.
			SPI3_MISO	I/O	MFP11	SPI3 MISO (Master In, Slave Out) pin.
			INT7	I	MFP13	External interrupt 7 input pin.
		63	PB.8	I/O	MFP0	General purpose digital I/O pin.
			EADC0_CH8	A	MFP1	EADC0 channel 8 analog input.
			EBI_ADR19	O	MFP2	EBI address bus bit 19.
			USCI1_CLK	I/O	MFP4	USCI1 clock pin.
			UART0_RXD	I	MFP5	UART0 data receiver input pin.
			UART1_nRTS	O	MFP6	UART1 request to Send output pin.
			I^2C1_SMBSUS	O	MFP7	I^2C1 SMBus SMBSUS pin (PMBus CONTROL pin)
			BPWM1_CH3	I/O	MFP10	BPWM1 channel 3 output/capture input.
			SPI3_MOSI	I/O	MFP11	SPI3 MOSI (Master Out, Slave In) pin.
			INT6	I	MFP13	External interrupt 6 input pin.
	47	64	PB.7	I/O	MFP0	General purpose digital I/O pin.
			EADC0_CH7	A	MFP1	EADC0 channel 7 analog input.
			EBI_nWRL	O	MFP2	EBI low byte write enable output pin.
			USCI1_DAT0	I/O	MFP4	USCI1 data 0 pin.
			UART1_TXD	O	MFP6	UART1 data transmitter output pin.
			SD1_CMD	I/O	MFP7	SD/SDIO1 command/response pin
			EBI_nCS0	O	MFP8	EBI chip select 0 output pin.
			BPWM1_CH4	I/O	MFP10	BPWM1 channel 4 output/capture input.
			EPWM1_BRAKE0	I	MFP11	EPWM1 Brake 0 input pin.
			EPWM1_CH4	I/O	MFP12	EPWM1 channel 4 output/capture input.
			INT5	I	MFP13	External interrupt 5 input pin.
			ACMP0_O	O	MFP15	Analog comparator 0 output pin.

4.2.2 M482 Series Pin Description

Note: PA.15 MFP can only be as USB_OTG_ID when enable full-Speed USB.

32 Pin	48 Pin	64 Pin	128 Pin	Pin Name	Type	MFP	Description
1	1	2	1	PB.5	I/O	MFP0	General purpose digital I/O pin.
				EADC0_CH5	A	MFP1	EADC0 channel 5 analog input.
				ACMP1_N	A	MFP1	Analog comparator 1 negative input pin.
				EBI_ADR0	O	MFP2	EBI address bus bit 0.
				SD0_DAT3	I/O	MFP3	SD/SDIO0 data line bit 3.
				SPI1_MISO	I/O	MFP5	SPI1 MISO (Master In, Slave Out) pin.
				I2C0_SCL	I/O	MFP6	I2C0 clock pin.
				UART5_TXD	O	MFP7	UART5 data transmitter output pin.
				USCI1_CTL0	I/O	MFP8	USCI1 control 0 pin.
				SC0_CLK	O	MFP9	Smart Card 0 clock pin.
				I2S0_BCLK	O	MFP10	I2S0 bit clock output pin.
				EPWM0_CH0	I/O	MFP11	EPWM0 channel 0 output/capture input.
				TM0	I/O	MFP14	Timer0 event counter input/toggle output pin.
				INT0	I	MFP15	External interrupt 0 input pin.
2	2	3	2	PB.4	I/O	MFP0	General purpose digital I/O pin.
				EADC0_CH4	A	MFP1	EADC0 channel 4 analog input.
				ACMP1_P1	A	MFP1	Analog comparator 1 positive input 1 pin.
				EBI_ADR1	O	MFP2	EBI address bus bit 1.
				SD0_DAT2	I/O	MFP3	SD/SDIO0 data line bit 2.
				SPI1_MOSI	I/O	MFP5	SPI1 MOSI (Master Out, Slave In) pin.
				I2C0_SDA	I/O	MFP6	I2C0 data input/output pin.
				UART5_RXD	I	MFP7	UART5 data receiver input pin.
				USCI1_CTL1	I/O	MFP8	USCI1 control 1 pin.
				SC0_DAT	I/O	MFP9	Smart Card 0 data pin.
				I2S0_MCLK	O	MFP10	I2S0 master clock output pin.
				EPWM0_CH1	I/O	MFP11	EPWM0 channel 1 output/capture input.
				TM1	I/O	MFP14	Timer1 event counter input/toggle output pin.
				INT1	I	MFP15	External interrupt 1 input pin.
3	3	4	3	PB.3	I/O	MFP0	General purpose digital I/O pin.
				EADC0_CH3	A	MFP1	EADC0 channel 3 analog input.
				ACMP0_N	A	MFP1	Analog comparator 0 negative input pin.
				EBI_ADR2	O	MFP2	EBI address bus bit 2.

32 Pin	48 Pin	64 Pin	128 Pin	Pin Name	Type	MFP	Description
				SD0_DAT1	I/O	MFP3	SD/SDIO0 data line bit 1.
				SPI1_CLK	I/O	MFP5	SPI1 serial clock pin.
				UART1_TXD	O	MFP6	UART1 data transmitter output pin.
				UART5_nRTS	O	MFP7	UART5 request to Send output pin.
				USCI1_DAT1	I/O	MFP8	USCI1 data 1 pin.
				SC0_RST	O	MFP9	Smart Card 0 reset pin.
				I2S0_DI	I	MFP10	I2S0 data input pin.
				EPWM0_CH2	I/O	MFP11	EPWM0 channel 2 output/capture input.
				TM2	I/O	MFP14	Timer2 event counter input/toggle output pin.
				INT2	I	MFP15	External interrupt 2 input pin.
4	4	5	4	PB.2	I/O	MFP0	General purpose digital I/O pin.
				EADC0_CH2	A	MFP1	EADC0 channel 2 analog input.
				ACMP0_P1	A	MFP1	Analog comparator 0 positive input 1 pin.
				OPA0_O	A	MFP1	Operational amplifier 0 output pin.
				EBI_ADR3	O	MFP2	EBI address bus bit 3.
				SD0_DAT0	I/O	MFP3	SD/SDIO0 data line bit 0.
				SPI1_SS	I/O	MFP5	SPI1 slave select pin.
				UART1_RXD	I	MFP6	UART1 data receiver input pin.
				UART5_nCTS	I	MFP7	UART5 clear to Send input pin.
				USCI1_DAT0	I/O	MFP8	USCI1 data 0 pin.
				SC0_PWR	O	MFP9	Smart Card 0 power pin.
				I2S0_DO	O	MFP10	I2S0 data output pin.
				EPWM0_CH3	I/O	MFP11	EPWM0 channel 3 output/capture input.
				TM3	I/O	MFP14	Timer3 event counter input/toggle output pin.
				INT3	I	MFP15	External interrupt 3 input pin.
			5	PC.12	I/O	MFP0	General purpose digital I/O pin.
				EBI_ADR4	O	MFP2	EBI address bus bit 4.
				UART0_TXD	O	MFP3	UART0 data transmitter output pin.
				I2C0_SCL	I/O	MFP4	I2C0 clock pin.
				SPI3_MISO	I/O	MFP6	SPI3 MISO (Master In, Slave Out) pin.
				SC0_nCD	I	MFP9	Smart Card 0 card detect pin.
				ECAP1_IC2	I	MFP11	Enhanced capture unit 1 input 2 pin.
				EPWM1_CH0	I/O	MFP12	EPWM1 channel 0 output/capture input.
				ACMP0_O	O	MFP14	Analog comparator 0 output pin.

32 Pin	48 Pin	64 Pin	128 Pin	Pin Name	Type	MFP	Description
			6	PC.11	I/O	MFP0	General purpose digital I/O pin.
				EBI_ADR5	O	MFP2	EBI address bus bit 5.
				UART0_RXD	I	MFP3	UART0 data receiver input pin.
				I2C0_SDA	I/O	MFP4	I2C0 data input/output pin.
				SPI3_MOSI	I/O	MFP6	SPI3 MOSI (Master Out, Slave In) pin.
				ECAP1_IC1	I	MFP11	Enhanced capture unit 1 input 1 pin.
				EPWM1_CH1	I/O	MFP12	EPWM1 channel 1 output/capture input.
				ACMP1_O	O	MFP14	Analog comparator 1 output pin.
			7	PC.10	I/O	MFP0	General purpose digital I/O pin.
				EBI_ADR6	O	MFP2	EBI address bus bit 6.
				SPI3_CLK	I/O	MFP6	SPI3 serial clock pin.
				UART3_TXD	O	MFP7	UART3 data transmitter output pin.
				CAN1_TXD	O	MFP9	CAN1 bus transmitter output.
				ECAP1_IC0	I	MFP11	Enhanced capture unit 1 input 0 pin.
				EPWM1_CH2	I/O	MFP12	EPWM1 channel 2 output/capture input.
			8	PC.9	I/O	MFP0	General purpose digital I/O pin.
				EBI_ADR7	O	MFP2	EBI address bus bit 7.
				SPI3_SS	I/O	MFP6	SPI3 slave select pin.
				UART3_RXD	I	MFP7	UART3 data receiver input pin.
				CAN1_RXD	I	MFP9	CAN1 bus receiver input.
				EPWM1_CH3	I/O	MFP12	EPWM1 channel 3 output/capture input.
5	5	6	9	PB.1	I/O	MFP0	General purpose digital I/O pin.
				EADC0_CH1	A	MFP1	EADC0 channel 1 analog input.
				OPA0_N	A	MFP1	Operational amplifier 0 negative input pin.
				EBI_ADR8	O	MFP2	EBI address bus bit 8.
				SD0_CLK	O	MFP3	SD/SDIO0 clock output pin
				SPI1_I2SMCLK	I/O	MFP5	SPI1 I2S master clock output pin
				SPI3_I2SMCLK	I/O	MFP6	SPI3 I2S master clock output pin
				UART2_TXD	O	MFP7	UART2 data transmitter output pin.
				USCI1_CLK	I/O	MFP8	USCI1 clock pin.
				I2C1_SCL	I/O	MFP9	I2C1 clock pin.
				I2S0_LRCK	O	MFP10	I2S0 left right channel clock output pin.
				EPWM0_CH4	I/O	MFP11	EPWM0 channel 4 output/capture input.
				EPWM1_CH4	I/O	MFP12	EPWM1 channel 4 output/capture input.

32 Pin	48 Pin	64 Pin	128 Pin	Pin Name	Type	MFP	Description
				EPWM0_BRAKE0	I	MFP13	EPWM0 Brake 0 input pin.
6	6	7	10	PB.0	I/O	MFP0	General purpose digital I/O pin.
				EADC0_CH0	A	MFP1	EADC0 channel 0 analog input.
				OPA0_P	A	MFP1	Operational amplifier 0 positive input pin.
				EBI_ADR9	O	MFP2	EBI address bus bit 9.
				SD0_CMD	I/O	MFP3	SD/SDIO0 command/response pin
				UART2_RXD	I	MFP7	UART2 data receiver input pin.
				SPI0_I2SMCLK	I/O	MFP8	SPI0 I2S master clock output pin
				I2C1_SDA	I/O	MFP9	I2C1 data input/output pin.
				EPWM0_CH5	I/O	MFP11	EPWM0 channel 5 output/capture input.
				EPWM1_CH5	I/O	MFP12	EPWM1 channel 5 output/capture input.
				EPWM0_BRAKE1	I	MFP13	EPWM0 Brake 1 input pin.
			11	VSS	P	MFP0	Ground pin for digital circuit.
			12	VDD	P	MFP0	Power supply for I/O ports and LDO source for internal PLL and digital circuit.
	7	8	13	PA.11	I/O	MFP0	General purpose digital I/O pin.
				ACMP0_P0	A	MFP1	Analog comparator 0 positive input 0 pin.
				EBI_nRD	O	MFP2	EBI read enable output pin.
				SC2_PWR	O	MFP3	Smart Card 2 power pin.
				SPI2_SS	I/O	MFP4	SPI2 slave select pin.
				SD1_DAT3	I/O	MFP5	SD/SDIO1 data line bit 3.
				USCI0_CLK	I/O	MFP6	USCI0 clock pin.
				I2C2_SCL	I/O	MFP7	I2C2 clock pin.
				BPWM0_CH0	I/O	MFP9	BPWM0 channel 0 output/capture input.
				EPWM0_SYNC_OUT	O	MFP10	EPWM0 counter synchronous trigger output pin.
				TM0_EXT	I/O	MFP13	Timer0 external capture input/toggle output pin.
				DAC1_ST	I	MFP14	DAC1 external trigger input.
	8	9	14	PA.10	I/O	MFP0	General purpose digital I/O pin.
				ACMP1_P0	A	MFP1	Analog comparator 1 positive input 0 pin.
				OPA1_O	A	MFP1	Operational amplifier 1 output pin.
				EBI_nWR	O	MFP2	EBI write enable output pin.
				SC2_RST	O	MFP3	Smart Card 2 reset pin.
				SPI2_CLK	I/O	MFP4	SPI2 serial clock pin.
				SD1_DAT2	I/O	MFP5	SD/SDIO1 data line bit 2.

32 Pin	48 Pin	64 Pin	128 Pin	Pin Name	Type	MFP	Description
				USCI0_DAT0	I/O	MFP6	USCI0 data 0 pin.
				I2C2_SDA	I/O	MFP7	I2C2 data input/output pin.
				BPWM0_CH1	I/O	MFP9	BPWM0 channel 1 output/capture input.
				QEI1_INDEX	I	MFP10	Quadrature encoder 1 index input
				ECAP0_IC0	I	MFP11	Enhanced capture unit 0 input 0 pin.
				TM1_EXT	I/O	MFP13	Timer1 external capture input/toggle output pin.
				DAC0_ST	I	MFP14	DAC0 external trigger input.
	9	10	15	PA.9	I/O	MFP0	General purpose digital I/O pin.
				OPA1_N	A	MFP1	Operational amplifier 1 negative input pin.
				EBI_MCLK	O	MFP2	EBI external clock output pin.
				SC2_DAT	I/O	MFP3	Smart Card 2 data pin.
				SPI2_MISO	I/O	MFP4	SPI2 MISO (Master In, Slave Out) pin.
				SD1_DAT1	I/O	MFP5	SD/SDIO1 data line bit 1.
				USCI0_DAT1	I/O	MFP6	USCI0 data 1 pin.
				UART1_TXD	O	MFP7	UART1 data transmitter output pin.
				BPWM0_CH2	I/O	MFP9	BPWM0 channel 2 output/capture input.
				QEI1_A	I	MFP10	Quadrature encoder 1 phase A input
				ECAP0_IC1	I	MFP11	Enhanced capture unit 0 input 1 pin.
				TM2_EXT	I/O	MFP13	Timer2 external capture input/toggle output pin.
	10	11	16	PA.8	I/O	MFP0	General purpose digital I/O pin.
				OPA1_P	A	MFP1	Operational amplifier 1 positive input pin.
				EBI_ALE	O	MFP2	EBI address latch enable output pin.
				SC2_CLK	O	MFP3	Smart Card 2 clock pin.
				SPI2_MOSI	I/O	MFP4	SPI2 MOSI (Master Out, Slave In) pin.
				SD1_DAT0	I/O	MFP5	SD/SDIO1 data line bit 0.
				USCI0_CTL1	I/O	MFP6	USCI0 control 1 pin.
				UART1_RXD	I	MFP7	UART1 data receiver input pin.
				BPWM0_CH3	I/O	MFP9	BPWM0 channel 3 output/capture input.
				QEI1_B	I	MFP10	Quadrature encoder 1 phase B input
				ECAP0_IC2	I	MFP11	Enhanced capture unit 0 input 2 pin.
				TM3_EXT	I/O	MFP13	Timer3 external capture input/toggle output pin.
				INT4	I	MFP15	External interrupt 4 input pin.
			17	PC.13	I/O	MFP0	General purpose digital I/O pin.
				EBI_ADR10	O	MFP2	EBI address bus bit 10.

32 Pin	48 Pin	64 Pin	128 Pin	Pin Name	Type	MFP	Description
				SC2_nCD	I	MFP3	Smart Card 2 card detect pin.
				SPI2_I2SMCLK	I/O	MFP4	SPI2 I2S master clock output pin
				CAN1_TXD	O	MFP5	CAN1 bus transmitter output.
				USCI0_CTL0	I/O	MFP6	USCI0 control 0 pin.
				UART2_TXD	O	MFP7	UART2 data transmitter output pin.
				BPWM0_CH4	I/O	MFP9	BPWM0 channel 4 output/capture input.
				CLKO	O	MFP13	Clock Out
				EADC0_ST	I	MFP14	EADC0 external trigger input.
			18	PD.12	I/O	MFP0	General purpose digital I/O pin.
				OPA2_O	A	MFP1	Operational amplifier 2 output pin.
				EBI_nCS0	O	MFP2	EBI chip select 0 output pin.
				CAN1_RXD	I	MFP5	CAN1 bus receiver input.
				UART2_RXD	I	MFP7	UART2 data receiver input pin.
				BPWM0_CH5	I/O	MFP9	BPWM0 channel 5 output/capture input.
				QEI0_INDEX	I	MFP10	Quadrature encoder 0 index input
				CLKO	O	MFP13	Clock Out
				EADC0_ST	I	MFP14	EADC0 external trigger input.
				INT5	I	MFP15	External interrupt 5 input pin.
			19	PD.11	I/O	MFP0	General purpose digital I/O pin.
				OPA2_N	A	MFP1	Operational amplifier 2 negative input pin.
				EBI_nCS1	O	MFP2	EBI chip select 1 output pin.
				UART1_TXD	O	MFP3	UART1 data transmitter output pin.
				CAN0_TXD	O	MFP4	CAN0 bus transmitter output.
				QEI0_A	I	MFP10	Quadrature encoder 0 phase A input
				INT6	I	MFP15	External interrupt 6 input pin.
			20	PD.10	I/O	MFP0	General purpose digital I/O pin.
				OPA2_P	A	MFP1	Operational amplifier 2 positive input pin.
				EBI_nCS2	O	MFP2	EBI chip select 2 output pin.
				UART1_RXD	I	MFP3	UART1 data receiver input pin.
				CAN0_RXD	I	MFP4	CAN0 bus receiver input.
				QEI0_B	I	MFP10	Quadrature encoder 0 phase B input
				INT7	I	MFP15	External interrupt 7 input pin.
			21	PG.2	I/O	MFP0	General purpose digital I/O pin.
				EBI_ADR11	O	MFP2	EBI address bus bit 11.

32 Pin	48 Pin	64 Pin	128 Pin	Pin Name	Type	MFP	Description
				SPI2_SS	I/O	MFP3	SPI2 slave select pin.
				I2C0_SMBAL	O	MFP4	I2C0 SMBus SMBALTER pin
				I2C1_SCL	I/O	MFP5	I2C1 clock pin.
				TM0	I/O	MFP13	Timer0 event counter input/toggle output pin.
			22	PG.3	I/O	MFP0	General purpose digital I/O pin.
				EBI_ADR12	O	MFP2	EBI address bus bit 12.
				SPI2_CLK	I/O	MFP3	SPI2 serial clock pin.
				I2C0_SMBSUS	O	MFP4	I2C0 SMBus SMBSUS pin (PMBus CONTROL pin)
				I2C1_SDA	I/O	MFP5	I2C1 data input/output pin.
				TM1	I/O	MFP13	Timer1 event counter input/toggle output pin.
			23	PG.4	I/O	MFP0	General purpose digital I/O pin.
				EBI_ADR13	O	MFP2	EBI address bus bit 13.
				SPI2_MISO	I/O	MFP3	SPI2 MISO (Master In, Slave Out) pin.
				TM2	I/O	MFP13	Timer2 event counter input/toggle output pin.
			24	PF.11	I/O	MFP0	General purpose digital I/O pin.
				EBI_ADR14	O	MFP2	EBI address bus bit 14.
				SPI2_MOSI	I/O	MFP3	SPI2 MOSI (Master Out, Slave In) pin.
				TAMPER5	I/O	MFP10	TAMPER detector loop pin 5.
				TM3	I/O	MFP13	Timer3 event counter input/toggle output pin.
			25	PF.10	I/O	MFP0	General purpose digital I/O pin.
				EBI_ADR15	O	MFP2	EBI address bus bit 15.
				SC0_nCD	I	MFP3	Smart Card 0 card detect pin.
				I2S0_BCLK	O	MFP4	I2S0 bit clock output pin.
				SPI0_I2SMCLK	I/O	MFP5	SPI0 I2S master clock output pin
				TAMPER4	I/O	MFP10	TAMPER detector loop pin 4.
			26	PF.9	I/O	MFP0	General purpose digital I/O pin.
				EBI_ADR16	O	MFP2	EBI address bus bit 16.
				SC0_PWR	O	MFP3	Smart Card 0 power pin.
				I2S0_MCLK	O	MFP4	I2S0 master clock output pin.
				SPI0_SS	I/O	MFP5	SPI0 slave select pin.
				TAMPER3	I/O	MFP10	TAMPER detector loop pin 3.
			27	PF.8	I/O	MFP0	General purpose digital I/O pin.
				EBI_ADR17	O	MFP2	EBI address bus bit 17.
				SC0_RST	O	MFP3	Smart Card 0 reset pin.

32 Pin	48 Pin	64 Pin	128 Pin	Pin Name	Type	MFP	Description
				I2S0_DI	I	MFP4	I2S0 data input pin.
				SPI0_CLK	I/O	MFP5	SPI0 serial clock pin.
				TAMPER2	I/O	MFP10	TAMPER detector loop pin 2.
			28	PF.7	I/O	MFP0	General purpose digital I/O pin.
				EBI_ADR18	O	MFP2	EBI address bus bit 18.
				SC0_DAT	I/O	MFP3	Smart Card 0 data pin.
				I2S0_DO	O	MFP4	I2S0 data output pin.
				SPI0_MISO	I/O	MFP5	SPI0 MISO (Master In, Slave Out) pin.
				UART4_TXD	O	MFP6	UART4 data transmitter output pin.
				TAMPER1	I/O	MFP10	TAMPER detector loop pin 1.
		12	29	PF.6	I/O	MFP0	General purpose digital I/O pin.
				EBI_ADR19	O	MFP2	EBI address bus bit 19.
				SC0_CLK	O	MFP3	Smart Card 0 clock pin.
				I2S0_LRCK	O	MFP4	I2S0 left right channel clock output pin.
				SPI0_MOSI	I/O	MFP5	SPI0 MOSI (Master Out, Slave In) pin.
				UART4_RXD	I	MFP6	UART4 data receiver input pin.
				EBI_nCS0	O	MFP7	EBI chip select 0 output pin.
				TAMPER0	I/O	MFP10	TAMPER detector loop pin 0.
		13	30	V_{DD}	P	MFP0	Power supply for I/O ports and LDO source for internal PLL and digital circuit.
7	11	14	31	PF.5	I/O	MFP0	General purpose digital I/O pin.
				UART2_RXD	I	MFP2	UART2 data receiver input pin.
				UART2_nCTS	I	MFP4	UART2 clear to Send input pin.
				BPWM0_CH4	I/O	MFP8	BPWM0 channel 4 output/capture input.
				EPWM0_SYNC_OUT	O	MFP9	EPWM0 counter synchronous trigger output pin.
				X32_IN	I	MFP10	External 32.768 kHz crystal input pin.
				EADC0_ST	I	MFP11	EADC0 external trigger input.
8	12	15	32	PF.4	I/O	MFP0	General purpose digital I/O pin.
				UART2_TXD	O	MFP2	UART2 data transmitter output pin.
				UART2_nRTS	O	MFP4	UART2 request to Send output pin.
				BPWM0_CH5	I/O	MFP8	BPWM0 channel 5 output/capture input.
				X32_OUT	O	MFP10	External 32.768 kHz crystal output pin.
			33	PH.4	I/O	MFP0	General purpose digital I/O pin.
				EBI_ADR3	O	MFP2	EBI address bus bit 3.

32 Pin	48 Pin	64 Pin	128 Pin	Pin Name	Type	MFP	Description
				SPI1_MISO	I/O	MFP3	SPI1 MISO (Master In, Slave Out) pin.
			34	PH.5	I/O	MFP0	General purpose digital I/O pin.
				EBI_ADR2	O	MFP2	EBI address bus bit 2.
				SPI1_MOSI	I/O	MFP3	SPI1 MOSI (Master Out, Slave In) pin.
			35	PH.6	I/O	MFP0	General purpose digital I/O pin.
				EBI_ADR1	O	MFP2	EBI address bus bit 1.
				SPI1_CLK	I/O	MFP3	SPI1 serial clock pin.
			36	PH.7	I/O	MFP0	General purpose digital I/O pin.
				EBI_ADR0	O	MFP2	EBI address bus bit 0.
				SPI1_SS	I/O	MFP3	SPI1 slave select pin.
9	13	16	37	PF.3	I/O	MFP0	General purpose digital I/O pin.
				EBI_nCS0	O	MFP2	EBI chip select 0 output pin.
				UART0_TXD	O	MFP3	UART0 data transmitter output pin.
				I2C0_SCL	I/O	MFP4	I2C0 clock pin.
				XT1_IN	I	MFP10	External 4~24 MHz (high speed) crystal input pin.
				BPWM1_CH0	I/O	MFP11	BPWM1 channel 0 output/capture input.
10	14	17	38	PF.2	I/O	MFP0	General purpose digital I/O pin.
				EBI_nCS1	O	MFP2	EBI chip select 1 output pin.
				UART0_RXD	I	MFP3	UART0 data receiver input pin.
				I2C0_SDA	I/O	MFP4	I2C0 data input/output pin.
				QSPI0_CLK	I/O	MFP5	Quad SPI0 serial clock pin.
				XT1_OUT	O	MFP10	External 4~24 MHz (high speed) crystal output pin.
				BPWM1_CH1	I/O	MFP11	BPWM1 channel 1 output/capture input.
			39	VSS	P	MFP0	Ground pin for digital circuit.
			40	VDD	P	MFP0	Power supply for I/O ports and LDO source for internal PLL and digital circuit.
			41	PE.8	I/O	MFP0	General purpose digital I/O pin.
				EBI_ADR10	O	MFP2	EBI address bus bit 10.
				I2S0_BCLK	O	MFP4	I2S0 bit clock output pin.
				SPI2_CLK	I/O	MFP5	SPI2 serial clock pin.
				USCI1_CTL1	I/O	MFP6	USCI1 control 1 pin.
				UART2_TXD	O	MFP7	UART2 data transmitter output pin.
				EPWM0_CH0	I/O	MFP10	EPWM0 channel 0 output/capture input.
				EPWM0_BRAKE0	I	MFP11	EPWM0 Brake 0 input pin.

32 Pin	48 Pin	64 Pin	128 Pin	Pin Name	Type	MFP	Description
				ECAP0_IC0	I	MFP12	Enhanced capture unit 0 input 0 pin.
				TRACE_DATA3	O	MFP14	ETM Trace Data 3 output pin
			42	PE.9	I/O	MFP0	General purpose digital I/O pin.
				EBI_ADR11	O	MFP2	EBI address bus bit 11.
				I2S0_MCLK	O	MFP4	I2S0 master clock output pin.
				SPI2_MISO	I/O	MFP5	SPI2 MISO (Master In, Slave Out) pin.
				USCI1_CTL0	I/O	MFP6	USCI1 control 0 pin.
				UART2_RXD	I	MFP7	UART2 data receiver input pin.
				EPWM0_CH1	I/O	MFP10	EPWM0 channel 1 output/capture input.
				EPWM0_BRAKE1	I	MFP11	EPWM0 Brake 1 input pin.
				ECAP0_IC1	I	MFP12	Enhanced capture unit 0 input 1 pin.
				TRACE_DATA2	O	MFP14	ETM Trace Data 2 output pin
			43	PE.10	I/O	MFP0	General purpose digital I/O pin.
				EBI_ADR12	O	MFP2	EBI address bus bit 12.
				I2S0_DI	I	MFP4	I2S0 data input pin.
				SPI2_MOSI	I/O	MFP5	SPI2 MOSI (Master Out, Slave In) pin.
				USCI1_DAT0	I/O	MFP6	USCI1 data 0 pin.
				UART3_TXD	O	MFP7	UART3 data transmitter output pin.
				EPWM0_CH2	I/O	MFP10	EPWM0 channel 2 output/capture input.
				EPWM1_BRAKE0	I	MFP11	EPWM1 Brake 0 input pin.
				ECAP0_IC2	I	MFP12	Enhanced capture unit 0 input 2 pin.
				TRACE_DATA1	O	MFP14	ETM Trace Data 1 output pin
			44	PE.11	I/O	MFP0	General purpose digital I/O pin.
				EBI_ADR13	O	MFP2	EBI address bus bit 13.
				I2S0_DO	O	MFP4	I2S0 data output pin.
				SPI2_SS	I/O	MFP5	SPI2 slave select pin.
				USCI1_DAT1	I/O	MFP6	USCI1 data 1 pin.
				UART3_RXD	I	MFP7	UART3 data receiver input pin.
				UART1_nCTS	I	MFP8	UART1 clear to Send input pin.
				EPWM0_CH3	I/O	MFP10	EPWM0 channel 3 output/capture input.
				EPWM1_BRAKE1	I	MFP11	EPWM1 Brake 1 input pin.
				ECAP1_IC2	I	MFP13	Enhanced capture unit 1 input 2 pin.
				TRACE_DATA0	O	MFP14	ETM Trace Data 0 output pin
			45	PE.12	I/O	MFP0	General purpose digital I/O pin.

32 Pin	48 Pin	64 Pin	128 Pin	Pin Name	Type	MFP	Description
				EBI_ADR14	O	MFP2	EBI address bus bit 14.
				I2S0_LRCK	O	MFP4	I2S0 left right channel clock output pin.
				SPI2_I2SMCLK	I/O	MFP5	SPI2 I2S master clock output pin
				USCI1_CLK	I/O	MFP6	USCI1 clock pin.
				UART1_nRTS	O	MFP8	UART1 request to Send output pin.
				EPWM0_CH4	I/O	MFP10	EPWM0 channel 4 output/capture input.
				ECAP1_IC1	I	MFP13	Enhanced capture unit 1 input 1 pin.
				TRACE_CLK	O	MFP14	ETM Trace Clock output pin
			46	PE.13	I/O	MFP0	General purpose digital I/O pin.
				EBI_ADR15	O	MFP2	EBI address bus bit 15.
				I2C0_SCL	I/O	MFP4	I2C0 clock pin.
				UART4_nRTS	O	MFP5	UART4 request to Send output pin.
				UART1_TXD	O	MFP8	UART1 data transmitter output pin.
				EPWM0_CH5	I/O	MFP10	EPWM0 channel 5 output/capture input.
				EPWM1_CH0	I/O	MFP11	EPWM1 channel 0 output/capture input.
				BPWM1_CH5	I/O	MFP12	BPWM1 channel 5 output/capture input.
				ECAP1_IC0	I	MFP13	Enhanced capture unit 1 input 0 pin.
			47	PC.8	I/O	MFP0	General purpose digital I/O pin.
				EBI_ADR16	O	MFP2	EBI address bus bit 16.
				I2C0_SDA	I/O	MFP4	I2C0 data input/output pin.
				UART4_nCTS	I	MFP5	UART4 clear to Send input pin.
				UART1_RXD	I	MFP8	UART1 data receiver input pin.
				EPWM1_CH1	I/O	MFP11	EPWM1 channel 1 output/capture input.
				BPWM1_CH4	I/O	MFP12	BPWM1 channel 4 output/capture input.
		18	48	PC.7	I/O	MFP0	General purpose digital I/O pin.
				EBI_AD9	I/O	MFP2	EBI address/data bus bit 9.
				SPI1_MISO	I/O	MFP4	SPI1 MISO (Master In, Slave Out) pin.
				UART4_TXD	O	MFP5	UART4 data transmitter output pin.
				SC2_PWR	O	MFP6	Smart Card 2 power pin.
				UART0_nCTS	I	MFP7	UART0 clear to Send input pin.
				I2C1_SMBAL	O	MFP8	I2C1 SMBus SMBALTER pin
				EPWM1_CH2	I/O	MFP11	EPWM1 channel 2 output/capture input.
				BPWM1_CH0	I/O	MFP12	BPWM1 channel 0 output/capture input.
				TM0	I/O	MFP14	Timer0 event counter input/toggle output pin.

32 Pin	48 Pin	64 Pin	128 Pin	Pin Name	Type	MFP	Description
				INT3	I	MFP15	External interrupt 3 input pin.
		19	49	PC.6	I/O	MFP0	General purpose digital I/O pin.
				EBI_AD8	I/O	MFP2	EBI address/data bus bit 8.
				SPI1_MOSI	I/O	MFP4	SPI1 MOSI (Master Out, Slave In) pin.
				UART4_RXD	I	MFP5	UART4 data receiver input pin.
				SC2_RST	O	MFP6	Smart Card 2 reset pin.
				UART0_nRTS	O	MFP7	UART0 request to Send output pin.
				I2C1_SMBSUS	O	MFP8	I2C1 SMBus SMBSUS pin (PMBus CONTROL pin)
				EPWM1_CH3	I/O	MFP11	EPWM1 channel 3 output/capture input.
				BPWM1_CH1	I/O	MFP12	BPWM1 channel 1 output/capture input.
				TM1	I/O	MFP14	Timer1 event counter input/toggle output pin.
				INT2	I	MFP15	External interrupt 2 input pin.
	15	20	50	PA.7	I/O	MFP0	General purpose digital I/O pin.
				EBI_AD7	I/O	MFP2	EBI address/data bus bit 7.
				SPI1_CLK	I/O	MFP4	SPI1 serial clock pin.
				SC2_DAT	I/O	MFP6	Smart Card 2 data pin.
				UART0_TXD	O	MFP7	UART0 data transmitter output pin.
				I2C1_SCL	I/O	MFP8	I2C1 clock pin.
				EPWM1_CH4	I/O	MFP11	EPWM1 channel 4 output/capture input.
				BPWM1_CH2	I/O	MFP12	BPWM1 channel 2 output/capture input.
				ACMP0_WLAT	I	MFP13	Analog comparator 0 window latch input pin
				TM2	I/O	MFP14	Timer2 event counter input/toggle output pin.
				INT1	I	MFP15	External interrupt 1 input pin.
	16	21	51	PA.6	I/O	MFP0	General purpose digital I/O pin.
				EBI_AD6	I/O	MFP2	EBI address/data bus bit 6.
				SPI1_SS	I/O	MFP4	SPI1 slave select pin.
				SD1_nCD	I	MFP5	SD/SDIO1 card detect input pin
				SC2_CLK	O	MFP6	Smart Card 2 clock pin.
				UART0_RXD	I	MFP7	UART0 data receiver input pin.
				I2C1_SDA	I/O	MFP8	I2C1 data input/output pin.
				EPWM1_CH5	I/O	MFP11	EPWM1 channel 5 output/capture input.
				BPWM1_CH3	I/O	MFP12	BPWM1 channel 3 output/capture input.
				ACMP1_WLAT	I	MFP13	Analog comparator 1 window latch input pin
				TM3	I/O	MFP14	Timer3 event counter input/toggle output pin.

32 Pin	48 Pin	64 Pin	128 Pin	Pin Name	Type	MFP	Description
				INT0	I	MFP15	External interrupt 0 input pin.
		22	52	VSS	P	MFP0	Ground pin for digital circuit.
		23	53	VDD	P	MFP0	Power supply for I/O ports and LDO source for internal PLL and digital circuit.
		24	54	LDO_CAP	A	MFP0	LDO output pin. **Note:** This pin needs to be connected with an external capacitor.
	17	25	55	PA.5	I/O	MFP0	General purpose digital I/O pin.
				SPIM_D2	I/O	MFP2	SPIM data 2 pin for Quad Mode I/O.
				QSPI0_MISO1	I/O	MFP3	Quad SPI0 MISO1 (Master In, Slave Out) pin.
				SPI1_I2SMCLK	I/O	MFP4	SPI1 I2S master clock output pin
				SD1_CMD	I/O	MFP5	SD/SDIO1 command/response pin
				SC2_nCD	I	MFP6	Smart Card 2 card detect pin.
				UART0_nCTS	I	MFP7	UART0 clear to Send input pin.
				UART5_TXD	O	MFP8	UART5 data transmitter output pin.
				I2C0_SCL	I/O	MFP9	I2C0 clock pin.
				CAN0_TXD	O	MFP10	CAN0 bus transmitter output.
				BPWM0_CH5	I/O	MFP12	BPWM0 channel 5 output/capture input.
				EPWM0_CH0	I/O	MFP13	EPWM0 channel 0 output/capture input.
				QEI0_INDEX	I	MFP14	Quadrature encoder 0 index input
	18	26	56	PA.4	I/O	MFP0	General purpose digital I/O pin.
				SPIM_D3	I/O	MFP2	SPIM data 3 pin for Quad Mode I/O.
				QSPI0_MOSI1	I/O	MFP3	Quad SPI0 MOSI1 (Master Out, Slave In) pin.
				SPI0_I2SMCLK	I/O	MFP4	SPI0 I2S master clock output pin
				SD1_CLK	O	MFP5	SD/SDIO1 clock output pin
				SC0_nCD	I	MFP6	Smart Card 0 card detect pin.
				UART0_nRTS	O	MFP7	UART0 request to Send output pin.
				UART5_RXD	I	MFP8	UART5 data receiver input pin.
				I2C0_SDA	I/O	MFP9	I2C0 data input/output pin.
				CAN0_RXD	I	MFP10	CAN0 bus receiver input.
				BPWM0_CH4	I/O	MFP12	BPWM0 channel 4 output/capture input.
				EPWM0_CH1	I/O	MFP13	EPWM0 channel 1 output/capture input.
				QEI0_A	I	MFP14	Quadrature encoder 0 phase A input
11	19	27	57	PA.3	I/O	MFP0	General purpose digital I/O pin.
				SPIM_SS	I/O	MFP2	SPIM slave select pin.

32 Pin	48 Pin	64 Pin	128 Pin	Pin Name	Type	MFP	Description
				QSPI0_SS	I/O	MFP3	Quad SPI0 slave select pin.
				SPI0_SS	I/O	MFP4	SPI0 slave select pin.
				SD1_DAT3	I/O	MFP5	SD/SDIO1 data line bit 3.
				SC0_PWR	O	MFP6	Smart Card 0 power pin.
				UART4_TXD	O	MFP7	UART4 data transmitter output pin.
				UART1_TXD	O	MFP8	UART1 data transmitter output pin.
				I2C1_SCL	I/O	MFP9	I2C1 clock pin.
				BPWM0_CH3	I/O	MFP12	BPWM0 channel 3 output/capture input.
				EPWM0_CH2	I/O	MFP13	EPWM0 channel 2 output/capture input.
				QEI0_B	I	MFP14	Quadrature encoder 0 phase B input
12	20	28	58	PA.2	I/O	MFP0	General purpose digital I/O pin.
				SPIM_CLK	I/O	MFP2	SPIM serial clock pin.
				QSPI0_CLK	I/O	MFP3	Quad SPI0 serial clock pin.
				SPI0_CLK	I/O	MFP4	SPI0 serial clock pin.
				SD1_DAT2	I/O	MFP5	SD/SDIO1 data line bit 2.
				SC0_RST	O	MFP6	Smart Card 0 reset pin.
				UART4_RXD	I	MFP7	UART4 data receiver input pin.
				UART1_RXD	I	MFP8	UART1 data receiver input pin.
				I2C1_SDA	I/O	MFP9	I2C1 data input/output pin.
				BPWM0_CH2	I/O	MFP12	BPWM0 channel 2 output/capture input.
				EPWM0_CH3	I/O	MFP13	EPWM0 channel 3 output/capture input.
13	21	29	59	PA.1	I/O	MFP0	General purpose digital I/O pin.
				SPIM_MISO	I/O	MFP2	SPIM MISO (Master In, Slave Out) pin.
				QSPI0_MISO0	I/O	MFP3	Quad SPI0 MISO0 (Master In, Slave Out) pin.
				SPI0_MISO	I/O	MFP4	SPI0 MISO (Master In, Slave Out) pin.
				SD1_DAT1	I/O	MFP5	SD/SDIO1 data line bit 1.
				SC0_DAT	I/O	MFP6	Smart Card 0 data pin.
				UART0_TXD	O	MFP7	UART0 data transmitter output pin.
				UART1_nCTS	I	MFP8	UART1 clear to Send input pin.
				I2C2_SCL	I/O	MFP9	I2C2 clock pin.
				BPWM0_CH1	I/O	MFP12	BPWM0 channel 1 output/capture input.
				EPWM0_CH4	I/O	MFP13	EPWM0 channel 4 output/capture input.
				DAC1_ST	I	MFP15	DAC1 external trigger input.
14	22	30	60	PA.0	I/O	MFP0	General purpose digital I/O pin.

32 Pin	48 Pin	64 Pin	128 Pin	Pin Name	Type	MFP	Description
				SPIM_MOSI	I/O	MFP2	SPIM MOSI (Master Out, Slave In) pin.
				QSPI0_MOSI0	I/O	MFP3	Quad SPI0 MOSI0 (Master Out, Slave In) pin.
				SPI0_MOSI	I/O	MFP4	SPI0 MOSI (Master Out, Slave In) pin.
				SD1_DAT0	I/O	MFP5	SD/SDIO1 data line bit 0.
				SC0_CLK	O	MFP6	Smart Card 0 clock pin.
				UART0_RXD	I	MFP7	UART0 data receiver input pin.
				UART1_nRTS	O	MFP8	UART1 request to Send output pin.
				I2C2_SDA	I/O	MFP9	I2C2 data input/output pin.
				BPWM0_CH0	I/O	MFP12	BPWM0 channel 0 output/capture input.
				EPWM0_CH5	I/O	MFP13	EPWM0 channel 5 output/capture input.
				DAC0_ST	I	MFP15	DAC0 external trigger input.
15	23	31	61	VDDIO	P	MFP0	Power supply for PA.0~PA.5.
			62	PE.14	I/O	MFP0	General purpose digital I/O pin.
				EBI_AD8	I/O	MFP2	EBI address/data bus bit 8.
				UART2_TXD	O	MFP3	UART2 data transmitter output pin.
				CAN0_TXD	O	MFP4	CAN0 bus transmitter output.
				SD1_nCD	I	MFP5	SD/SDIO1 card detect input pin
			63	PE.15	I/O	MFP0	General purpose digital I/O pin.
				EBI_AD9	I/O	MFP2	EBI address/data bus bit 9.
				UART2_RXD	I	MFP3	UART2 data receiver input pin.
				CAN0_RXD	I	MFP4	CAN0 bus receiver input.
16	24	32	64	nRESET	I	MFP0	External reset input: active LOW, with an internal pull-up. Set this pin low reset to initial state. **Note:** It is recommended to use 10 kΩ pull-up resistor and 10 uF capacitor on nRESET pin.
17	25	33	65	PF.0	I/O	MFP0	General purpose digital I/O pin.
				UART1_TXD	O	MFP2	UART1 data transmitter output pin.
				I2C1_SCL	I/O	MFP3	I2C1 clock pin.
				BPWM1_CH0	I/O	MFP12	BPWM1 channel 0 output/capture input.
				ICE_DAT	O	MFP14	Serial wired debugger data pin. **Note:** It is recommended to use 100 kΩ pull-up resistor on ICE_DAT pin.
18	26	34	66	PF.1	I/O	MFP0	General purpose digital I/O pin.
				UART1_RXD	I	MFP2	UART1 data receiver input pin.
				I2C1_SDA	I/O	MFP3	I2C1 data input/output pin.
				BPWM1_CH1	I/O	MFP12	BPWM1 channel 1 output/capture input.

32 Pin	48 Pin	64 Pin	128 Pin	Pin Name	Type	MFP	Description
				ICE_CLK	I	MFP14	Serial wired debugger clock pin. **Note:** It is recommended to use 100 kΩ pull-up resistor on ICE_CLK pin.
			67	PD.9	I/O	MFP0	General purpose digital I/O pin.
				EBI_AD7	I/O	MFP2	EBI address/data bus bit 7.
				I2C2_SCL	I/O	MFP3	I2C2 clock pin.
				UART2_nCTS	I	MFP4	UART2 clear to Send input pin.
			68	PD.8	I/O	MFP0	General purpose digital I/O pin.
				EBI_AD6	I/O	MFP2	EBI address/data bus bit 6.
				I2C2_SDA	I/O	MFP3	I2C2 data input/output pin.
				UART2_nRTS	O	MFP4	UART2 request to Send output pin.
	27	35	69	PC.5	I/O	MFP0	General purpose digital I/O pin.
				EBI_AD5	I/O	MFP2	EBI address/data bus bit 5.
				SPIM_D2	I/O	MFP3	SPIM data 2 pin for Quad Mode I/O.
				QSPI0_MISO1	I/O	MFP4	Quad SPI0 MISO1 (Master In, Slave Out) pin.
				UART2_TXD	O	MFP8	UART2 data transmitter output pin.
				I2C1_SCL	I/O	MFP9	I2C1 clock pin.
				CAN0_TXD	O	MFP10	CAN0 bus transmitter output.
				UART4_TXD	O	MFP11	UART4 data transmitter output pin.
				EPWM1_CH0	I/O	MFP12	EPWM1 channel 0 output/capture input.
	28	36	70	PC.4	I/O	MFP0	General purpose digital I/O pin.
				EBI_AD4	I/O	MFP2	EBI address/data bus bit 4.
				SPIM_D3	I/O	MFP3	SPIM data 3 pin for Quad Mode I/O.
				QSPI0_MOSI1	I/O	MFP4	Quad SPI0 MOSI1 (Master Out, Slave In) pin.
				SC1_nCD	I	MFP5	Smart Card 1 card detect pin.
				I2S0_BCLK	O	MFP6	I2S0 bit clock output pin.
				SPI1_I2SMCLK	I/O	MFP7	SPI1 I2S master clock output pin
				UART2_RXD	I	MFP8	UART2 data receiver input pin.
				I2C1_SDA	I/O	MFP9	I2C1 data input/output pin.
				CAN0_RXD	I	MFP10	CAN0 bus receiver input.
				UART4_RXD	I	MFP11	UART4 data receiver input pin.
				EPWM1_CH1	I/O	MFP12	EPWM1 channel 1 output/capture input.
	29	37	71	PC.3	I/O	MFP0	General purpose digital I/O pin.
				EBI_AD3	I/O	MFP2	EBI address/data bus bit 3.
				SPIM_SS	I/O	MFP3	SPIM slave select pin.

32 Pin	48 Pin	64 Pin	128 Pin	Pin Name	Type	MFP	Description
				QSPI0_SS	I/O	MFP4	Quad SPI0 slave select pin.
				SC1_PWR	O	MFP5	Smart Card 1 power pin.
				I2S0_MCLK	O	MFP6	I2S0 master clock output pin.
				SPI1_MISO	I/O	MFP7	SPI1 MISO (Master In, Slave Out) pin.
				UART2_nRTS	O	MFP8	UART2 request to Send output pin.
				I2C0_SMBAL	O	MFP9	I2C0 SMBus SMBALTER pin
				CAN1_TXD	O	MFP10	CAN1 bus transmitter output.
				UART3_TXD	O	MFP11	UART3 data transmitter output pin.
				EPWM1_CH2	I/O	MFP12	EPWM1 channel 2 output/capture input.
	30	38	72	PC.2	I/O	MFP0	General purpose digital I/O pin.
				EBI_AD2	I/O	MFP2	EBI address/data bus bit 2.
				SPIM_CLK	I/O	MFP3	SPIM serial clock pin.
				QSPI0_CLK	I/O	MFP4	Quad SPI0 serial clock pin.
				SC1_RST	O	MFP5	Smart Card 1 reset pin.
				I2S0_DI	I	MFP6	I2S0 data input pin.
				SPI1_MOSI	I/O	MFP7	SPI1 MOSI (Master Out, Slave In) pin.
				UART2_nCTS	I	MFP8	UART2 clear to Send input pin.
				I2C0_SMBSUS	O	MFP9	I2C0 SMBus SMBSUS pin (PMBus CONTROL pin)
				CAN1_RXD	I	MFP10	CAN1 bus receiver input.
				UART3_RXD	I	MFP11	UART3 data receiver input pin.
				EPWM1_CH3	I/O	MFP12	EPWM1 channel 3 output/capture input.
19	31	39	73	PC.1	I/O	MFP0	General purpose digital I/O pin.
				EBI_AD1	I/O	MFP2	EBI address/data bus bit 1.
				SPIM_MISO	I/O	MFP3	SPIM MISO (Master In, Slave Out) pin.
				QSPI0_MISO0	I/O	MFP4	Quad SPI0 MISO0 (Master In, Slave Out) pin.
				SC1_DAT	I/O	MFP5	Smart Card 1 data pin.
				I2S0_DO	O	MFP6	I2S0 data output pin.
				SPI1_CLK	I/O	MFP7	SPI1 serial clock pin.
				UART2_TXD	O	MFP8	UART2 data transmitter output pin.
				I2C0_SCL	I/O	MFP9	I2C0 clock pin.
				EPWM1_CH4	I/O	MFP12	EPWM1 channel 4 output/capture input.
				ACMP0_O	O	MFP14	Analog comparator 0 output pin.
20	32	40	74	PC.0	I/O	MFP0	General purpose digital I/O pin.
				EBI_AD0	I/O	MFP2	EBI address/data bus bit 0.

32 Pin	48 Pin	64 Pin	128 Pin	Pin Name	Type	MFP	Description
				SPIM_MOSI	I/O	MFP3	SPIM MOSI (Master Out, Slave In) pin.
				QSPI0_MOSI0	I/O	MFP4	Quad SPI0 MOSI0 (Master Out, Slave In) pin.
				SC1_CLK	O	MFP5	Smart Card 1 clock pin.
				I2S0_LRCK	O	MFP6	I2S0 left right channel clock output pin.
				SPI1_SS	I/O	MFP7	SPI1 slave select pin.
				UART2_RXD	I	MFP8	UART2 data receiver input pin.
				I2C0_SDA	I/O	MFP9	I2C0 data input/output pin.
				EPWM1_CH5	I/O	MFP12	EPWM1 channel 5 output/capture input.
				ACMP1_O	O	MFP14	Analog comparator 1 output pin.
			75	VSS	P	MFP0	Ground pin for digital circuit.
			76	VDD	P	MFP0	Power supply for I/O ports and LDO source for internal PLL and digital circuit.
			77	PG.9	I/O	MFP0	General purpose digital I/O pin.
				EBI_AD0	I/O	MFP2	EBI address/data bus bit 0.
				SD1_DAT3	I/O	MFP3	SD/SDIO1 data line bit 3.
				SPIM_D2	I/O	MFP4	SPIM data 2 pin for Quad Mode I/O.
				BPWM0_CH5	I/O	MFP12	BPWM0 channel 5 output/capture input.
			78	PG.10	I/O	MFP0	General purpose digital I/O pin.
				EBI_AD1	I/O	MFP2	EBI address/data bus bit 1.
				SD1_DAT2	I/O	MFP3	SD/SDIO1 data line bit 2.
				SPIM_D3	I/O	MFP4	SPIM data 3 pin for Quad Mode I/O.
				BPWM0_CH4	I/O	MFP12	BPWM0 channel 4 output/capture input.
			79	PG.11	I/O	MFP0	General purpose digital I/O pin.
				EBI_AD2	I/O	MFP2	EBI address/data bus bit 2.
				SD1_DAT1	I/O	MFP3	SD/SDIO1 data line bit 1.
				SPIM_SS	I/O	MFP4	SPIM slave select pin.
				BPWM0_CH3	I/O	MFP12	BPWM0 channel 3 output/capture input.
			80	PG.12	I/O	MFP0	General purpose digital I/O pin.
				EBI_AD3	I/O	MFP2	EBI address/data bus bit 3.
				SD1_DAT0	I/O	MFP3	SD/SDIO1 data line bit 0.
				SPIM_CLK	I/O	MFP4	SPIM serial clock pin.
				BPWM0_CH2	I/O	MFP12	BPWM0 channel 2 output/capture input.
			81	PG.13	I/O	MFP0	General purpose digital I/O pin.
				EBI_AD4	I/O	MFP2	EBI address/data bus bit 4.

32 Pin	48 Pin	64 Pin	128 Pin	Pin Name	Type	MFP	Description
				SD1_CMD	I/O	MFP3	SD/SDIO1 command/response pin
				SPIM_MISO	I/O	MFP4	SPIM MISO (Master In, Slave Out) pin.
				BPWM0_CH1	I/O	MFP12	BPWM0 channel 1 output/capture input.
			82	PG.14	I/O	MFP0	General purpose digital I/O pin.
				EBI_AD5	I/O	MFP2	EBI address/data bus bit 5.
				SD1_CLK	O	MFP3	SD/SDIO1 clock output pin
				SPIM_MOSI	I/O	MFP4	SPIM MOSI (Master Out, Slave In) pin.
				BPWM0_CH0	I/O	MFP12	BPWM0 channel 0 output/capture input.
			83	PG.15	I/O	MFP0	General purpose digital I/O pin.
				SD1_nCD	I	MFP3	SD/SDIO1 card detect input pin
				CLKO	O	MFP14	Clock Out
				EADC0_ST	I	MFP15	EADC0 external trigger input.
		41		PD.3	I/O	MFP0	General purpose digital I/O pin.
				EBI_AD10	I/O	MFP2	EBI address/data bus bit 10.
				USCI0_CTL1	I/O	MFP3	USCI0 control 1 pin.
				SPI0_SS	I/O	MFP4	SPI0 slave select pin.
				UART3_nRTS	O	MFP5	UART3 request to Send output pin.
				USCI1_CTL0	I/O	MFP6	USCI1 control 0 pin.
				SC2_PWR	O	MFP7	Smart Card 2 power pin.
				SC1_nCD	I	MFP8	Smart Card 1 card detect pin.
				UART0_TXD	O	MFP9	UART0 data transmitter output pin.
		42		PD.2	I/O	MFP0	General purpose digital I/O pin.
				EBI_AD11	I/O	MFP2	EBI address/data bus bit 11.
				USCI0_DAT1	I/O	MFP3	USCI0 data 1 pin.
				SPI0_CLK	I/O	MFP4	SPI0 serial clock pin.
				UART3_nCTS	I	MFP5	UART3 clear to Send input pin.
				SC2_RST	O	MFP7	Smart Card 2 reset pin.
				UART0_RXD	I	MFP9	UART0 data receiver input pin.
		43		PD.1	I/O	MFP0	General purpose digital I/O pin.
				EBI_AD12	I/O	MFP2	EBI address/data bus bit 12.
				USCI0_DAT0	I/O	MFP3	USCI0 data 0 pin.
				SPI0_MISO	I/O	MFP4	SPI0 MISO (Master In, Slave Out) pin.
				UART3_TXD	O	MFP5	UART3 data transmitter output pin.
				I2C2_SCL	I/O	MFP6	I2C2 clock pin.

32 Pin	48 Pin	64 Pin	128 Pin	Pin Name	Type	MFP	Description
				SC2_DAT	I/O	MFP7	Smart Card 2 data pin.
		44		PD.0	I/O	MFP0	General purpose digital I/O pin.
				EBI_AD13	I/O	MFP2	EBI address/data bus bit 13.
				USCI0_CLK	I/O	MFP3	USCI0 clock pin.
				SPI0_MOSI	I/O	MFP4	SPI0 MOSI (Master Out, Slave In) pin.
				UART3_RXD	I	MFP5	UART3 data receiver input pin.
				I2C2_SDA	I/O	MFP6	I2C2 data input/output pin.
				SC2_CLK	O	MFP7	Smart Card 2 clock pin.
				TM2	I/O	MFP14	Timer2 event counter input/toggle output pin.
			84	PD.13	I/O	MFP0	General purpose digital I/O pin.
				EBI_AD10	I/O	MFP2	EBI address/data bus bit 10.
				SD0_nCD	I	MFP3	SD/SDIO0 card detect input pin
				SPI0_I2SMCLK	I/O	MFP4	SPI0 I2S master clock output pin
				SPI1_I2SMCLK	I/O	MFP5	SPI1 I2S master clock output pin
				SC2_nCD	I	MFP7	Smart Card 2 card detect pin.
21	33	45	85	PA.12	I/O	MFP0	General purpose digital I/O pin.
				I2S0_BCLK	O	MFP2	I2S0 bit clock output pin.
				UART4_TXD	O	MFP3	UART4 data transmitter output pin.
				I2C1_SCL	I/O	MFP4	I2C1 clock pin.
				SPI2_SS	I/O	MFP5	SPI2 slave select pin.
				CAN0_TXD	O	MFP6	CAN0 bus transmitter output.
				SC2_PWR	O	MFP7	Smart Card 2 power pin.
				BPWM1_CH2	I/O	MFP11	BPWM1 channel 2 output/capture input.
				QEI1_INDEX	I	MFP12	Quadrature encoder 1 index input
				USB_VBUS	P	MFP14	Power supply from USB host or HUB.
22	34	46	86	PA.13	I/O	MFP0	General purpose digital I/O pin.
				I2S0_MCLK	O	MFP2	I2S0 master clock output pin.
				UART4_RXD	I	MFP3	UART4 data receiver input pin.
				I2C1_SDA	I/O	MFP4	I2C1 data input/output pin.
				SPI2_CLK	I/O	MFP5	SPI2 serial clock pin.
				CAN0_RXD	I	MFP6	CAN0 bus receiver input.
				SC2_RST	O	MFP7	Smart Card 2 reset pin.
				BPWM1_CH3	I/O	MFP11	BPWM1 channel 3 output/capture input.
				QEI1_A	I	MFP12	Quadrature encoder 1 phase A input

32 Pin	48 Pin	64 Pin	128 Pin	Pin Name	Type	MFP	Description
				USB_D-	A	MFP14	USB differential signal D-.
23	35	47	87	PA.14	I/O	MFP0	General purpose digital I/O pin.
				I2S0_DI	I	MFP2	I2S0 data input pin.
				UART0_TXD	O	MFP3	UART0 data transmitter output pin.
				SPI2_MISO	I/O	MFP5	SPI2 MISO (Master In, Slave Out) pin.
				I2C2_SCL	I/O	MFP6	I2C2 clock pin.
				SC2_DAT	I/O	MFP7	Smart Card 2 data pin.
				BPWM1_CH4	I/O	MFP11	BPWM1 channel 4 output/capture input.
				QEI1_B	I	MFP12	Quadrature encoder 1 phase B input
				USB_D+	A	MFP14	USB differential signal D+.
24	36	48	88	PA.15	I/O	MFP0	General purpose digital I/O pin.
				I2S0_DO	O	MFP2	I2S0 data output pin.
				UART0_RXD	I	MFP3	UART0 data receiver input pin.
				SPI2_MOSI	I/O	MFP5	SPI2 MOSI (Master Out, Slave In) pin.
				I2C2_SDA	I/O	MFP6	I2C2 data input/output pin.
				SC2_CLK	O	MFP7	Smart Card 2 clock pin.
				BPWM1_CH5	I/O	MFP11	BPWM1 channel 5 output/capture input.
				EPWM0_SYNC_IN	I	MFP12	EPWM0 counter synchronous trigger input pin.
				USB_OTG_ID	I	MFP14	USB_ identification.
			89	NC			
			90	VDD	P	MFP0	Power supply for I/O ports and LDO source for internal PLL and digital circuit.
			91	NC			
			92	NC			
			93	VSS	P	MFP0	Ground pin for digital circuit.
			94	NC			
			95	LDO_CAP	A	MFP0	LDO output pin. **Note:** This pin needs to be connected with an external capacitor.
			96	NC			
			97	PE.7	I/O	MFP0	General purpose digital I/O pin.
				SD0_CMD	I/O	MFP3	SD/SDIO0 command/response pin
				SPIM_D2	I/O	MFP4	SPIM data 2 pin for Quad Mode I/O.
				UART5_TXD	O	MFP8	UART5 data transmitter output pin.
				CAN1_TXD	O	MFP9	CAN1 bus transmitter output.

32 Pin	48 Pin	64 Pin	128 Pin	Pin Name	Type	MFP	Description
				QEI1_INDEX	I	MFP11	Quadrature encoder 1 index input
				EPWM0_CH0	I/O	MFP12	EPWM0 channel 0 output/capture input.
				BPWM0_CH5	I/O	MFP13	BPWM0 channel 5 output/capture input.
			98	PE.6	I/O	MFP0	General purpose digital I/O pin.
				SD0_CLK	O	MFP3	SD/SDIO0 clock output pin
				SPIM_D3	I/O	MFP4	SPIM data 3 pin for Quad Mode I/O.
				SPI3_I2SMCLK	I/O	MFP5	SPI3 I2S master clock output pin
				SC0_nCD	I	MFP6	Smart Card 0 card detect pin.
				USCI0_CTL0	I/O	MFP7	USCI0 control 0 pin.
				UART5_RXD	I	MFP8	UART5 data receiver input pin.
				CAN1_RXD	I	MFP9	CAN1 bus receiver input.
				QEI1_A	I	MFP11	Quadrature encoder 1 phase A input
				EPWM0_CH1	I/O	MFP12	EPWM0 channel 1 output/capture input.
				BPWM0_CH4	I/O	MFP13	BPWM0 channel 4 output/capture input.
			99	PE.5	I/O	MFP0	General purpose digital I/O pin.
				EBI_nRD	O	MFP2	EBI read enable output pin.
				SD0_DAT3	I/O	MFP3	SD/SDIO0 data line bit 3.
				SPIM_SS	I/O	MFP4	SPIM slave select pin.
				SPI3_SS	I/O	MFP5	SPI3 slave select pin.
				SC0_PWR	O	MFP6	Smart Card 0 power pin.
				USCI0_CTL1	I/O	MFP7	USCI0 control 1 pin.
				QEI1_B	I	MFP11	Quadrature encoder 1 phase B input
				EPWM0_CH2	I/O	MFP12	EPWM0 channel 2 output/capture input.
				BPWM0_CH3	I/O	MFP13	BPWM0 channel 3 output/capture input.
			100	PE.4	I/O	MFP0	General purpose digital I/O pin.
				EBI_nWR	O	MFP2	EBI write enable output pin.
				SD0_DAT2	I/O	MFP3	SD/SDIO0 data line bit 2.
				SPIM_CLK	I/O	MFP4	SPIM serial clock pin.
				SPI3_CLK	I/O	MFP5	SPI3 serial clock pin.
				SC0_RST	O	MFP6	Smart Card 0 reset pin.
				USCI0_DAT1	I/O	MFP7	USCI0 data 1 pin.
				QEI0_INDEX	I	MFP11	Quadrature encoder 0 index input
				EPWM0_CH3	I/O	MFP12	EPWM0 channel 3 output/capture input.
				BPWM0_CH2	I/O	MFP13	BPWM0 channel 2 output/capture input.

32 Pin	48 Pin	64 Pin	128 Pin	Pin Name	Type	MFP	Description
			101	PE.3	I/O	MFP0	General purpose digital I/O pin.
				EBI_MCLK	O	MFP2	EBI external clock output pin.
				SD0_DAT1	I/O	MFP3	SD/SDIO0 data line bit 1.
				SPIM_MISO	I/O	MFP4	SPIM MISO (Master In, Slave Out) pin.
				SPI3_MISO	I/O	MFP5	SPI3 MISO (Master In, Slave Out) pin.
				SC0_DAT	I/O	MFP6	Smart Card 0 data pin.
				USCI0_DAT0	I/O	MFP7	USCI0 data 0 pin.
				QEI0_A	I	MFP11	Quadrature encoder 0 phase A input
				EPWM0_CH4	I/O	MFP12	EPWM0 channel 4 output/capture input.
				BPWM0_CH1	I/O	MFP13	BPWM0 channel 1 output/capture input.
			102	PE.2	I/O	MFP0	General purpose digital I/O pin.
				EBI_ALE	O	MFP2	EBI address latch enable output pin.
				SD0_DAT0	I/O	MFP3	SD/SDIO0 data line bit 0.
				SPIM_MOSI	I/O	MFP4	SPIM MOSI (Master Out, Slave In) pin.
				SPI3_MOSI	I/O	MFP5	SPI3 MOSI (Master Out, Slave In) pin.
				SC0_CLK	O	MFP6	Smart Card 0 clock pin.
				USCI0_CLK	I/O	MFP7	USCI0 clock pin.
				QEI0_B	I	MFP11	Quadrature encoder 0 phase B input
				EPWM0_CH5	I/O	MFP12	EPWM0 channel 5 output/capture input.
				BPWM0_CH0	I/O	MFP13	BPWM0 channel 0 output/capture input.
			103	VSS	P	MFP0	Ground pin for digital circuit.
			104	VDD	P	MFP0	Power supply for I/O ports and LDO source for internal PLL and digital circuit.
			105	PE.1	I/O	MFP0	General purpose digital I/O pin.
				EBI_AD10	I/O	MFP2	EBI address/data bus bit 10.
				QSPI0_MISO0	I/O	MFP3	Quad SPI0 MISO0 (Master In, Slave Out) pin.
				SC2_DAT	I/O	MFP4	Smart Card 2 data pin.
				I2S0_BCLK	O	MFP5	I2S0 bit clock output pin.
				SPI1_MISO	I/O	MFP6	SPI1 MISO (Master In, Slave Out) pin.
				UART3_TXD	O	MFP7	UART3 data transmitter output pin.
				I2C1_SCL	I/O	MFP8	I2C1 clock pin.
				UART4_nCTS	I	MFP9	UART4 clear to Send input pin.
			106	PE.0	I/O	MFP0	General purpose digital I/O pin.
				EBI_AD11	I/O	MFP2	EBI address/data bus bit 11.

32 Pin	48 Pin	64 Pin	128 Pin	Pin Name	Type	MFP	Description
				QSPI0_MOSI0	I/O	MFP3	Quad SPI0 MOSI0 (Master Out, Slave In) pin.
				SC2_CLK	O	MFP4	Smart Card 2 clock pin.
				I2S0_MCLK	O	MFP5	I2S0 master clock output pin.
				SPI1_MOSI	I/O	MFP6	SPI1 MOSI (Master Out, Slave In) pin.
				UART3_RXD	I	MFP7	UART3 data receiver input pin.
				I2C1_SDA	I/O	MFP8	I2C1 data input/output pin.
				UART4_nRTS	O	MFP9	UART4 request to Send output pin.
			107	PH.8	I/O	MFP0	General purpose digital I/O pin.
				EBI_AD12	I/O	MFP2	EBI address/data bus bit 12.
				QSPI0_CLK	I/O	MFP3	Quad SPI0 serial clock pin.
				SC2_PWR	O	MFP4	Smart Card 2 power pin.
				I2S0_DI	I	MFP5	I2S0 data input pin.
				SPI1_CLK	I/O	MFP6	SPI1 serial clock pin.
				UART3_nRTS	O	MFP7	UART3 request to Send output pin.
				I2C1_SMBAL	O	MFP8	I2C1 SMBus SMBALTER pin
				I2C2_SCL	I/O	MFP9	I2C2 clock pin.
				UART1_TXD	O	MFP10	UART1 data transmitter output pin.
			108	PH.9	I/O	MFP0	General purpose digital I/O pin.
				EBI_AD13	I/O	MFP2	EBI address/data bus bit 13.
				QSPI0_SS	I/O	MFP3	Quad SPI0 slave select pin.
				SC2_RST	O	MFP4	Smart Card 2 reset pin.
				I2S0_DO	O	MFP5	I2S0 data output pin.
				SPI1_SS	I/O	MFP6	SPI1 slave select pin.
				UART3_nCTS	I	MFP7	UART3 clear to Send input pin.
				I2C1_SMBSUS	O	MFP8	I2C1 SMBus SMBSUS pin (PMBus CONTROL pin)
				I2C2_SDA	I/O	MFP9	I2C2 data input/output pin.
				UART1_RXD	I	MFP10	UART1 data receiver input pin.
			109	PH.10	I/O	MFP0	General purpose digital I/O pin.
				EBI_AD14	I/O	MFP2	EBI address/data bus bit 14.
				QSPI0_MISO1	I/O	MFP3	Quad SPI0 MISO1 (Master In, Slave Out) pin.
				SC2_nCD	I	MFP4	Smart Card 2 card detect pin.
				I2S0_LRCK	O	MFP5	I2S0 left right channel clock output pin.
				SPI1_I2SMCLK	I/O	MFP6	SPI1 I2S master clock output pin
				UART4_TXD	O	MFP7	UART4 data transmitter output pin.

32 Pin	48 Pin	64 Pin	128 Pin	Pin Name	Type	MFP	Description
				UART0_TXD	O	MFP8	UART0 data transmitter output pin.
			110	PH.11	I/O	MFP0	General purpose digital I/O pin.
				EBI_AD15	I/O	MFP2	EBI address/data bus bit 15.
				QSPI0_MOSI1	I/O	MFP3	Quad SPI0 MOSI1 (Master Out, Slave In) pin.
				UART4_RXD	I	MFP7	UART4 data receiver input pin.
				UART0_RXD	I	MFP8	UART0 data receiver input pin.
				EPWM0_CH5	I/O	MFP11	EPWM0 channel 5 output/capture input.
			111	PD.14	I/O	MFP0	General purpose digital I/O pin.
				EBI_nCS0	O	MFP2	EBI chip select 0 output pin.
				SPI3_I2SMCLK	I/O	MFP3	SPI3 I2S master clock output pin
				SC1_nCD	I	MFP4	Smart Card 1 card detect pin.
				EPWM0_CH4	I/O	MFP11	EPWM0 channel 4 output/capture input.
25	37	49	112	VSS	P	MFP0	Ground pin for digital circuit.
26	38	50	113	LDO_CAP	A	MFP0	LDO output pin. **Note:** This pin needs to be connected with an external capacitor.
27	39	51	114	VDD	P	MFP0	Power supply for I/O ports and LDO source for internal PLL and digital circuit.
	40	52	115	PC.14	I/O	MFP0	General purpose digital I/O pin.
				EBI_AD11	I/O	MFP2	EBI address/data bus bit 11.
				SC1_nCD	I	MFP3	Smart Card 1 card detect pin.
				SPI0_I2SMCLK	I/O	MFP4	SPI0 I2S master clock output pin
				USCI0_CTL0	I/O	MFP5	USCI0 control 0 pin.
				QSPI0_CLK	I/O	MFP6	Quad SPI0 serial clock pin.
				EPWM0_SYNC_IN	I	MFP11	EPWM0 counter synchronous trigger input pin.
				TM1	I/O	MFP13	Timer1 event counter input/toggle output pin.
				USB_VBUS_ST	I	MFP14	USB external V_{BUS} regulator status pin.
28	41	53	116	PB.15	I/O	MFP0	General purpose digital I/O pin.
				EADC0_CH15	A	MFP1	EADC0 channel 15 analog input.
				EBI_AD12	I/O	MFP2	EBI address/data bus bit 12.
				SC1_PWR	O	MFP3	Smart Card 1 power pin.
				SPI0_SS	I/O	MFP4	SPI0 slave select pin.
				USCI0_CTL1	I/O	MFP5	USCI0 control 1 pin.
				UART0_nCTS	I	MFP6	UART0 clear to Send input pin.
				UART3_TXD	O	MFP7	UART3 data transmitter output pin.

32 Pin	48 Pin	64 Pin	128 Pin	Pin Name	Type	MFP	Description
				I2C2_SMBAL	O	MFP8	I2C2 SMBus SMBALTER pin
				EPWM1_CH0	I/O	MFP11	EPWM1 channel 0 output/capture input.
				TM0_EXT	I/O	MFP13	Timer0 external capture input/toggle output pin.
				USB_VBUS_EN	O	MFP14	USB external V_{BUS} regulator enable pin.
29	42	54	117	PB.14	I/O	MFP0	General purpose digital I/O pin.
				EADC0_CH14	A	MFP1	EADC0 channel 14 analog input.
				EBI_AD13	I/O	MFP2	EBI address/data bus bit 13.
				SC1_RST	O	MFP3	Smart Card 1 reset pin.
				SPI0_CLK	I/O	MFP4	SPI0 serial clock pin.
				USCI0_DAT1	I/O	MFP5	USCI0 data 1 pin.
				UART0_nRTS	O	MFP6	UART0 request to Send output pin.
				UART3_RXD	I	MFP7	UART3 data receiver input pin.
				I2C2_SMBSUS	O	MFP8	I2C2 SMBus SMBSUS pin (PMBus CONTROL pin)
				EPWM1_CH1	I/O	MFP11	EPWM1 channel 1 output/capture input.
				TM1_EXT	I/O	MFP13	Timer1 external capture input/toggle output pin.
				CLKO	O	MFP14	Clock Out
30	43	55	118	PB.13	I/O	MFP0	General purpose digital I/O pin.
				EADC0_CH13	A	MFP1	EADC0 channel 13 analog input.
				DAC1_OUT	A	MFP1	DAC1 channel analog output.
				ACMP0_P3	A	MFP1	Analog comparator 0 positive input 3 pin.
				ACMP1_P3	A	MFP1	Analog comparator 1 positive input 3 pin.
				EBI_AD14	I/O	MFP2	EBI address/data bus bit 14.
				SC1_DAT	I/O	MFP3	Smart Card 1 data pin.
				SPI0_MISO	I/O	MFP4	SPI0 MISO (Master In, Slave Out) pin.
				USCI0_DAT0	I/O	MFP5	USCI0 data 0 pin.
				UART0_TXD	O	MFP6	UART0 data transmitter output pin.
				UART3_nRTS	O	MFP7	UART3 request to Send output pin.
				I2C2_SCL	I/O	MFP8	I2C2 clock pin.
				EPWM1_CH2	I/O	MFP11	EPWM1 channel 2 output/capture input.
				TM2_EXT	I/O	MFP13	Timer2 external capture input/toggle output pin.
31	44	56	119	PB.12	I/O	MFP0	General purpose digital I/O pin.
				EADC0_CH12	A	MFP1	EADC0 channel 12 analog input.
				DAC0_OUT	A	MFP1	DAC0 channel analog output.
				ACMP0_P2	A	MFP1	Analog comparator 0 positive input 2 pin.

32 Pin	48 Pin	64 Pin	128 Pin	Pin Name	Type	MFP	Description
				ACMP1_P2	A	MFP1	Analog comparator 1 positive input 2 pin.
				EBI_AD15	I/O	MFP2	EBI address/data bus bit 15.
				SC1_CLK	O	MFP3	Smart Card 1 clock pin.
				SPI0_MOSI	I/O	MFP4	SPI0 MOSI (Master Out, Slave In) pin.
				USCI0_CLK	I/O	MFP5	USCI0 clock pin.
				UART0_RXD	I	MFP6	UART0 data receiver input pin.
				UART3_nCTS	I	MFP7	UART3 clear to Send input pin.
				I2C2_SDA	I/O	MFP8	I2C2 data input/output pin.
				SD0_nCD	I	MFP9	SD/SDIO0 card detect input pin
				EPWM1_CH3	I/O	MFP11	EPWM1 channel 3 output/capture input.
				TM3_EXT	I/O	MFP13	Timer3 external capture input/toggle output pin.
32	45	57	120	AVDD	P	MFP0	Power supply for internal analog circuit.
		58	121	VREF	A	MFP0	ADC reference voltage input. Note: This pin needs to be connected with a 1uF capacitor.
	46	59	122	AVSS	P	MFP0	Ground pin for analog circuit.
		60	123	PB.11	I/O	MFP0	General purpose digital I/O pin.
				EADC0_CH11	A	MFP1	EADC0 channel 11 analog input.
				EBI_ADR16	O	MFP2	EBI address bus bit 16.
				UART0_nCTS	I	MFP5	UART0 clear to Send input pin.
				UART4_TXD	O	MFP6	UART4 data transmitter output pin.
				I2C1_SCL	I/O	MFP7	I2C1 clock pin.
				CAN0_TXD	O	MFP8	CAN0 bus transmitter output.
				SPI0_I2SMCLK	I/O	MFP9	SPI0 I2S master clock output pin
				BPWM1_CH0	I/O	MFP10	BPWM1 channel 0 output/capture input.
				SPI3_CLK	I/O	MFP11	SPI3 serial clock pin.
		61	124	PB.10	I/O	MFP0	General purpose digital I/O pin.
				EADC0_CH10	A	MFP1	EADC0 channel 10 analog input.
				EBI_ADR17	O	MFP2	EBI address bus bit 17.
				USCI1_CTL0	I/O	MFP4	USCI1 control 0 pin.
				UART0_nRTS	O	MFP5	UART0 request to Send output pin.
				UART4_RXD	I	MFP6	UART4 data receiver input pin.
				I2C1_SDA	I/O	MFP7	I2C1 data input/output pin.
				CAN0_RXD	I	MFP8	CAN0 bus receiver input.
				BPWM1_CH1	I/O	MFP10	BPWM1 channel 1 output/capture input.

32 Pin	48 Pin	64 Pin	128 Pin	Pin Name	Type	MFP	Description
				SPI3_SS	I/O	MFP11	SPI3 slave select pin.
		62	125	PB.9	I/O	MFP0	General purpose digital I/O pin.
				EADC0_CH9	A	MFP1	EADC0 channel 9 analog input.
				EBI_ADR18	O	MFP2	EBI address bus bit 18.
				USCI1_CTL1	I/O	MFP4	USCI1 control 1 pin.
				UART0_TXD	O	MFP5	UART0 data transmitter output pin.
				UART1_nCTS	I	MFP6	UART1 clear to Send input pin.
				I2C1_SMBAL	O	MFP7	I2C1 SMBus SMBALTER pin
				BPWM1_CH2	I/O	MFP10	BPWM1 channel 2 output/capture input.
				SPI3_MISO	I/O	MFP11	SPI3 MISO (Master In, Slave Out) pin.
				INT7	I	MFP13	External interrupt 7 input pin.
		63	126	PB.8	I/O	MFP0	General purpose digital I/O pin.
				EADC0_CH8	A	MFP1	EADC0 channel 8 analog input.
				EBI_ADR19	O	MFP2	EBI address bus bit 19.
				USCI1_CLK	I/O	MFP4	USCI1 clock pin.
				UART0_RXD	I	MFP5	UART0 data receiver input pin.
				UART1_nRTS	O	MFP6	UART1 request to Send output pin.
				I2C1_SMBSUS	O	MFP7	I2C1 SMBus SMBSUS pin (PMBus CONTROL pin)
				BPWM1_CH3	I/O	MFP10	BPWM1 channel 3 output/capture input.
				SPI3_MOSI	I/O	MFP11	SPI3 MOSI (Master Out, Slave In) pin.
				INT6	I	MFP13	External interrupt 6 input pin.
	47	64	127	PB.7	I/O	MFP0	General purpose digital I/O pin.
				EADC0_CH7	A	MFP1	EADC0 channel 7 analog input.
				EBI_nWRL	O	MFP2	EBI low byte write enable output pin.
				USCI1_DAT0	I/O	MFP4	USCI1 data 0 pin.
				CAN1_TXD	O	MFP5	CAN1 bus transmitter output.
				UART1_TXD	O	MFP6	UART1 data transmitter output pin.
				SD1_CMD	I/O	MFP7	SD/SDIO1 command/response pin
				EBI_nCS0	O	MFP8	EBI chip select 0 output pin.
				BPWM1_CH4	I/O	MFP10	BPWM1 channel 4 output/capture input.
				EPWM1_BRAKE0	I	MFP11	EPWM1 Brake 0 input pin.
				EPWM1_CH4	I/O	MFP12	EPWM1 channel 4 output/capture input.
				INT5	I	MFP13	External interrupt 5 input pin.
				USB_VBUS_ST	I	MFP14	USB external V_{BUS} regulator status pin.

32 Pin	48 Pin	64 Pin	128 Pin	Pin Name	Type	MFP	Description
				ACMP0_O	O	MFP15	Analog comparator 0 output pin.
	48	1	128	PB.6	I/O	MFP0	General purpose digital I/O pin.
				EADC0_CH6	A	MFP1	EADC0 channel 6 analog input.
				EBI_nWRH	O	MFP2	EBI high byte write enable output pin
				USCI1_DAT1	I/O	MFP4	USCI1 data 1 pin.
				CAN1_RXD	I	MFP5	CAN1 bus receiver input.
				UART1_RXD	I	MFP6	UART1 data receiver input pin.
				SD1_CLK	O	MFP7	SD/SDIO1 clock output pin
				EBI_nCS1	O	MFP8	EBI chip select 1 output pin.
				BPWM1_CH5	I/O	MFP10	BPWM1 channel 5 output/capture input.
				EPWM1_BRAKE1	I	MFP11	EPWM1 Brake 1 input pin.
				EPWM1_CH5	I/O	MFP12	EPWM1 channel 5 output/capture input.
				INT4	I	MFP13	External interrupt 4 input pin.
				USB_VBUS_EN	O	MFP14	USB external V_{BUS} regulator enable pin.
				ACMP1_O	O	MFP15	Analog comparator 1 output pin.

4.2.3 M483 Series Pin Description

Note: PA.15 MFP can only be as USB_OTG_ID when enable full-Speed USB.

64 Pin	128 Pin	Pin Name	Type	MFP	Description
2	1	PB.5	I/O	MFP0	General purpose digital I/O pin.
		EADC0_CH5	A	MFP1	EADC0 channel 5 analog input.
		ACMP1_N	A	MFP1	Analog comparator 1 negative input pin.
		EBI_ADR0	O	MFP2	EBI address bus bit 0.
		SD0_DAT3	I/O	MFP3	SD/SDIO0 data line bit 3.
		SPI1_MISO	I/O	MFP5	SPI1 MISO (Master In, Slave Out) pin.
		I^2C0_SCL	I/O	MFP6	I^2C0 clock pin.
		UART5_TXD	O	MFP7	UART5 data transmitter output pin.
		USCI1_CTL0	I/O	MFP8	USCI1 control 0 pin.
		SC0_CLK	O	MFP9	Smart Card 0 clock pin.
		I^2S0_BCLK	O	MFP10	I^2S0 bit clock output pin.
		EPWM0_CH0	I/O	MFP11	EPWM0 channel 0 output/capture input.
		TM0	I/O	MFP14	Timer0 event counter input/toggle output pin.
		INT0	I	MFP15	External interrupt 0 input pin.
3	2	PB.4	I/O	MFP0	General purpose digital I/O pin.
		EADC0_CH4	A	MFP1	EADC0 channel 4 analog input.
		ACMP1_P1	A	MFP1	Analog comparator 1 positive input 1 pin.
		EBI_ADR1	O	MFP2	EBI address bus bit 1.
		SD0_DAT2	I/O	MFP3	SD/SDIO0 data line bit 2.
		SPI1_MOSI	I/O	MFP5	SPI1 MOSI (Master Out, Slave In) pin.
		I^2C0_SDA	I/O	MFP6	I^2C0 data input/output pin.
		UART5_RXD	I	MFP7	UART5 data receiver input pin.
		USCI1_CTL1	I/O	MFP8	USCI1 control 1 pin.
		SC0_DAT	I/O	MFP9	Smart Card 0 data pin.
		I^2S0_MCLK	O	MFP10	I^2S0 master clock output pin.
		EPWM0_CH1	I/O	MFP11	EPWM0 channel 1 output/capture input.
		TM1	I/O	MFP14	Timer1 event counter input/toggle output pin.
		INT1	I	MFP15	External interrupt 1 input pin.
4	3	PB.3	I/O	MFP0	General purpose digital I/O pin.
		EADC0_CH3	A	MFP1	EADC0 channel 3 analog input.
		ACMP0_N	A	MFP1	Analog comparator 0 negative input pin.
		EBI_ADR2	O	MFP2	EBI address bus bit 2.

64 Pin	128 Pin	Pin Name	Type	MFP	Description
		SD0_DAT1	I/O	MFP3	SD/SDIO0 data line bit 1.
		SPI1_CLK	I/O	MFP5	SPI1 serial clock pin.
		UART1_TXD	O	MFP6	UART1 data transmitter output pin.
		UART5_nRTS	O	MFP7	UART5 request to Send output pin.
		USCI1_DAT1	I/O	MFP8	USCI1 data 1 pin.
		SC0_RST	O	MFP9	Smart Card 0 reset pin.
		I^2S0_DI	I	MFP10	I^2S0 data input pin.
		EPWM0_CH2	I/O	MFP11	EPWM0 channel 2 output/capture input.
		TM2	I/O	MFP14	Timer2 event counter input/toggle output pin.
		INT2	I	MFP15	External interrupt 2 input pin.
5	4	PB.2	I/O	MFP0	General purpose digital I/O pin.
		EADC0_CH2	A	MFP1	EADC0 channel 2 analog input.
		ACMP0_P1	A	MFP1	Analog comparator 0 positive input 1 pin.
		OPA0_O	A	MFP1	Operational amplifier 0 output pin.
		EBI_ADR3	O	MFP2	EBI address bus bit 3.
		SD0_DAT0	I/O	MFP3	SD/SDIO0 data line bit 0.
		SPI1_SS	I/O	MFP5	SPI1 slave select pin.
		UART1_RXD	I	MFP6	UART1 data receiver input pin.
		UART5_nCTS	I	MFP7	UART5 clear to Send input pin.
		USCI1_DAT0	I/O	MFP8	USCI1 data 0 pin.
		SC0_PWR	O	MFP9	Smart Card 0 power pin.
		I^2S0_DO	O	MFP10	I^2S0 data output pin.
		EPWM0_CH3	I/O	MFP11	EPWM0 channel 3 output/capture input.
		TM3	I/O	MFP14	Timer3 event counter input/toggle output pin.
		INT3	I	MFP15	External interrupt 3 input pin.
	5	PC.12	I/O	MFP0	General purpose digital I/O pin.
		EBI_ADR4	O	MFP2	EBI address bus bit 4.
		UART0_TXD	O	MFP3	UART0 data transmitter output pin.
		I^2C0_SCL	I/O	MFP4	I^2C0 clock pin.
		SPI3_MISO	I/O	MFP6	SPI3 MISO (Master In, Slave Out) pin.
		SC0_nCD	I	MFP9	Smart Card 0 card detect pin.
		ECAP1_IC2	I	MFP11	Enhanced capture unit 1 input 2 pin.
		EPWM1_CH0	I/O	MFP12	EPWM1 channel 0 output/capture input.
		ACMP0_O	O	MFP14	Analog comparator 0 output pin.

64 Pin	128 Pin	Pin Name	Type	MFP	Description
	6	PC.11	I/O	MFP0	General purpose digital I/O pin.
		EBI_ADR5	O	MFP2	EBI address bus bit 5.
		UART0_RXD	I	MFP3	UART0 data receiver input pin.
		I²C0_SDA	I/O	MFP4	I²C0 data input/output pin.
		SPI3_MOSI	I/O	MFP6	SPI3 MOSI (Master Out, Slave In) pin.
		ECAP1_IC1	I	MFP11	Enhanced capture unit 1 input 1 pin.
		EPWM1_CH1	I/O	MFP12	EPWM1 channel 1 output/capture input.
		ACMP1_O	O	MFP14	Analog comparator 1 output pin.
	7	PC.10	I/O	MFP0	General purpose digital I/O pin.
		EBI_ADR6	O	MFP2	EBI address bus bit 6.
		SPI3_CLK	I/O	MFP6	SPI3 serial clock pin.
		UART3_TXD	O	MFP7	UART3 data transmitter output pin.
		CAN1_TXD	O	MFP9	CAN1 bus transmitter output.
		ECAP1_IC0	I	MFP11	Enhanced capture unit 1 input 0 pin.
		EPWM1_CH2	I/O	MFP12	EPWM1 channel 2 output/capture input.
	8	PC.9	I/O	MFP0	General purpose digital I/O pin.
		EBI_ADR7	O	MFP2	EBI address bus bit 7.
		SPI3_SS	I/O	MFP6	SPI3 slave select pin.
		UART3_RXD	I	MFP7	UART3 data receiver input pin.
		CAN1_RXD	I	MFP9	CAN1 bus receiver input.
		EPWM1_CH3	I/O	MFP12	EPWM1 channel 3 output/capture input.
6	9	PB.1	I/O	MFP0	General purpose digital I/O pin.
		EADC0_CH1	A	MFP1	EADC0 channel 1 analog input.
		OPA0_N	A	MFP1	Operational amplifier 0 negative input pin.
		EBI_ADR8	O	MFP2	EBI address bus bit 8.
		SD0_CLK	O	MFP3	SD/SDIO0 clock output pin
		SPI1_I2SMCLK	I/O	MFP5	SPI1 I²S master clock output pin
		SPI3_I2SMCLK	I/O	MFP6	SPI3 I²S master clock output pin
		UART2_TXD	O	MFP7	UART2 data transmitter output pin.
		USCI1_CLK	I/O	MFP8	USCI1 clock pin.
		I²C1_SCL	I/O	MFP9	I²C1 clock pin.
		I²S0_LRCK	O	MFP10	I²S0 left right channel clock output pin.
		EPWM0_CH4	I/O	MFP11	EPWM0 channel 4 output/capture input.
		EPWM1_CH4	I/O	MFP12	EPWM1 channel 4 output/capture input.

64 Pin	128 Pin	Pin Name	Type	MFP	Description
		EPWM0_BRAKE0	I	MFP13	EPWM0 Brake 0 input pin.
7	10	PB.0	I/O	MFP0	General purpose digital I/O pin.
		EADC0_CH0	A	MFP1	EADC0 channel 0 analog input.
		OPA0_P	A	MFP1	Operational amplifier 0 positive input pin.
		EBI_ADR9	O	MFP2	EBI address bus bit 9.
		SD0_CMD	I/O	MFP3	SD/SDIO0 command/response pin
		UART2_RXD	I	MFP7	UART2 data receiver input pin.
		SPI0_I2SMCLK	I/O	MFP8	SPI0 I^2S master clock output pin
		I^2C1_SDA	I/O	MFP9	I^2C1 data input/output pin.
		EPWM0_CH5	I/O	MFP11	EPWM0 channel 5 output/capture input.
		EPWM1_CH5	I/O	MFP12	EPWM1 channel 5 output/capture input.
		EPWM0_BRAKE1	I	MFP13	EPWM0 Brake 1 input pin.
	11	V_{SS}	P	MFP0	Ground pin for digital circuit.
	12	V_{DD}	P	MFP0	Power supply for I/O ports and LDO source for internal PLL and digital circuit.
8	13	PA.11	I/O	MFP0	General purpose digital I/O pin.
		ACMP0_P0	A	MFP1	Analog comparator 0 positive input 0 pin.
		EBI_nRD	O	MFP2	EBI read enable output pin.
		SC2_PWR	O	MFP3	Smart Card 2 power pin.
		SPI2_SS	I/O	MFP4	SPI2 slave select pin.
		SD1_DAT3	I/O	MFP5	SD/SDIO1 data line bit 3.
		USCI0_CLK	I/O	MFP6	USCI0 clock pin.
		I^2C2_SCL	I/O	MFP7	I^2C2 clock pin.
		BPWM0_CH0	I/O	MFP9	BPWM0 channel 0 output/capture input.
		EPWM0_SYNC_OUT	O	MFP10	EPWM0 counter synchronous trigger output pin.
		TM0_EXT	I/O	MFP13	Timer0 event counter input/toggle output pin.
		DAC1_ST	I	MFP14	DAC1 external trigger input.
9	14	PA.10	I/O	MFP0	General purpose digital I/O pin.
		ACMP1_P0	A	MFP1	Analog comparator 1 positive input 0 pin.
		OPA1_O	A	MFP1	Operational amplifier 1 output pin.
		EBI_nWR	O	MFP2	EBI write enable output pin.
		SC2_RST	O	MFP3	Smart Card 2 reset pin.
		SPI2_CLK	I/O	MFP4	SPI2 serial clock pin.
		SD1_DAT2	I/O	MFP5	SD/SDIO1 data line bit 2.

64 Pin	128 Pin	Pin Name	Type	MFP	Description
		USCI0_DAT0	I/O	MFP6	USCI0 data 0 pin.
		I²C2_SDA	I/O	MFP7	I²C2 data input/output pin.
		BPWM0_CH1	I/O	MFP9	BPWM0 channel 1 output/capture input.
		QEI1_INDEX	I	MFP10	Quadrature encoder 1 index input
		ECAP0_IC0	I	MFP11	Enhanced capture unit 0 input 0 pin.
		TM1_EXT	I/O	MFP13	Timer1 event counter input/toggle output pin.
		DAC0_ST	I	MFP14	DAC0 external trigger input.
10	15	PA.9	I/O	MFP0	General purpose digital I/O pin.
		OPA1_N	A	MFP1	Operational amplifier 1 negative input pin.
		EBI_MCLK	O	MFP2	EBI external clock output pin.
		SC2_DAT	I/O	MFP3	Smart Card 2 data pin.
		SPI2_MISO	I/O	MFP4	SPI2 MISO (Master In, Slave Out) pin.
		SD1_DAT1	I/O	MFP5	SD/SDIO1 data line bit 1.
		USCI0_DAT1	I/O	MFP6	USCI0 data 1 pin.
		UART1_TXD	O	MFP7	UART1 data transmitter output pin.
		BPWM0_CH2	I/O	MFP9	BPWM0 channel 2 output/capture input.
		QEI1_A	I	MFP10	Quadrature encoder 1 phase A input
		ECAP0_IC1	I	MFP11	Enhanced capture unit 0 input 1 pin.
		TM2_EXT	I/O	MFP13	Timer2 event counter input/toggle output pin.
11	16	PA.8	I/O	MFP0	General purpose digital I/O pin.
		OPA1_P	A	MFP1	Operational amplifier 1 positive input pin.
		EBI_ALE	O	MFP2	EBI address latch enable output pin.
		SC2_CLK	O	MFP3	Smart Card 2 clock pin.
		SPI2_MOSI	I/O	MFP4	SPI2 MOSI (Master Out, Slave In) pin.
		SD1_DAT0	I/O	MFP5	SD/SDIO1 data line bit 0.
		USCI0_CTL1	I/O	MFP6	USCI0 control 1 pin.
		UART1_RXD	I	MFP7	UART1 data receiver input pin.
		BPWM0_CH3	I/O	MFP9	BPWM0 channel 3 output/capture input.
		QEI1_B	I	MFP10	Quadrature encoder 1 phase B input
		ECAP0_IC2	I	MFP11	Enhanced capture unit 0 input 2 pin.
		TM3_EXT	I/O	MFP13	Timer3 event counter input/toggle output pin.
		INT4	I	MFP15	External interrupt 4 input pin.

64 Pin	128 Pin	Pin Name	Type	MFP	Description
	17	PC.13	I/O	MFP0	General purpose digital I/O pin.
		EBI_ADR10	O	MFP2	EBI address bus bit 10.
		SC2_nCD	I	MFP3	Smart Card 2 card detect pin.
		SPI2_I2SMCLK	I/O	MFP4	SPI2 I^2S master clock output pin
		CAN1_TXD	O	MFP5	CAN1 bus transmitter output.
		USCI0_CTL0	I/O	MFP6	USCI0 control 0 pin.
		UART2_TXD	O	MFP7	UART2 data transmitter output pin.
		BPWM0_CH4	I/O	MFP9	BPWM0 channel 4 output/capture input.
		CLKO	O	MFP13	Clock Out
		EADC0_ST	I	MFP14	EADC0 external trigger input.
	18	PD.12	I/O	MFP0	General purpose digital I/O pin.
		OPA2_O	A	MFP1	Operational amplifier 2 output pin.
		EBI_nCS0	O	MFP2	EBI chip select 0 output pin.
		CAN1_RXD	I	MFP5	CAN1 bus receiver input.
		UART2_RXD	I	MFP7	UART2 data receiver input pin.
		BPWM0_CH5	I/O	MFP9	BPWM0 channel 5 output/capture input.
		QEI0_INDEX	I	MFP10	Quadrature encoder 0 index input
		CLKO	O	MFP13	Clock Out
		EADC0_ST	I	MFP14	EADC0 external trigger input.
		INT5	I	MFP15	External interrupt 5 input pin.
	19	PD.11	I/O	MFP0	General purpose digital I/O pin.
		OPA2_N	A	MFP1	Operational amplifier 2 negative input pin.
		EBI_nCS1	O	MFP2	EBI chip select 1 output pin.
		UART1_TXD	O	MFP3	UART1 data transmitter output pin.
		CAN0_TXD	O	MFP4	CAN0 bus transmitter output.
		QEI0_A	I	MFP10	Quadrature encoder 0 phase A input
		INT6	I	MFP15	External interrupt 6 input pin.
	20	PD.10	I/O	MFP0	General purpose digital I/O pin.
		OPA2_P	A	MFP1	Operational amplifier 2 positive input pin.
		EBI_nCS2	O	MFP2	EBI chip select 2 output pin.
		UART1_RXD	I	MFP3	UART1 data receiver input pin.
		CAN0_RXD	I	MFP4	CAN0 bus receiver input.
		QEI0_B	I	MFP10	Quadrature encoder 0 phase B input
		INT7	I	MFP15	External interrupt 7 input pin.

64 Pin	128 Pin	Pin Name	Type	MFP	Description
	21	PG.2	I/O	MFP0	General purpose digital I/O pin.
		EBI_ADR11	O	MFP2	EBI address bus bit 11.
		SPI2_SS	I/O	MFP3	SPI2 slave select pin.
		I²C0_SMBAL	O	MFP4	I²C0 SMBus SMBALTER pin
		I²C1_SCL	I/O	MFP5	I²C1 clock pin.
		TM0	I/O	MFP13	Timer0 event counter input/toggle output pin.
	22	PG.3	I/O	MFP0	General purpose digital I/O pin.
		EBI_ADR12	O	MFP2	EBI address bus bit 12.
		SPI2_CLK	I/O	MFP3	SPI2 serial clock pin.
		I²C0_SMBSUS	O	MFP4	I²C0 SMBus SMBSUS pin (PMBus CONTROL pin)
		I²C1_SDA	I/O	MFP5	I²C1 data input/output pin.
		TM1	I/O	MFP13	Timer1 event counter input/toggle output pin.
	23	PG.4	I/O	MFP0	General purpose digital I/O pin.
		EBI_ADR13	O	MFP2	EBI address bus bit 13.
		SPI2_MISO	I/O	MFP3	SPI2 MISO (Master In, Slave Out) pin.
		TM2	I/O	MFP13	Timer2 event counter input/toggle output pin.
	24	PF.11	I/O	MFP0	General purpose digital I/O pin.
		EBI_ADR14	O	MFP2	EBI address bus bit 14.
		SPI2_MOSI	I/O	MFP3	SPI2 MOSI (Master Out, Slave In) pin.
		TAMPER5	I/O	MFP10	TAMPER detector loop pin 5.
		TM3	I/O	MFP13	Timer3 event counter input/toggle output pin.
	25	PF.10	I/O	MFP0	General purpose digital I/O pin.
		EBI_ADR15	O	MFP2	EBI address bus bit 15.
		SC0_nCD	I	MFP3	Smart Card 0 card detect pin.
		I²S0_BCLK	O	MFP4	I²S0 bit clock output pin.
		SPI0_I2SMCLK	I/O	MFP5	SPI0 I²S master clock output pin
		TAMPER4	I/O	MFP10	TAMPER detector loop pin 4.
	26	PF.9	I/O	MFP0	General purpose digital I/O pin.
		EBI_ADR16	O	MFP2	EBI address bus bit 16.
		SC0_PWR	O	MFP3	Smart Card 0 power pin.
		I²S0_MCLK	O	MFP4	I²S0 master clock output pin.
		SPI0_SS	I/O	MFP5	SPI0 slave select pin.
		TAMPER3	I/O	MFP10	TAMPER detector loop pin 3.
	27	PF.8	I/O	MFP0	General purpose digital I/O pin.

64 Pin	128 Pin	Pin Name	Type	MFP	Description
		EBI_ADR17	O	MFP2	EBI address bus bit 17.
		SC0_RST	O	MFP3	Smart Card 0 reset pin.
		I²S0_DI	I	MFP4	I²S0 data input pin.
		SPI0_CLK	I/O	MFP5	SPI0 serial clock pin.
		TAMPER2	I/O	MFP10	TAMPER detector loop pin 2.
	28	PF.7	I/O	MFP0	General purpose digital I/O pin.
		EBI_ADR18	O	MFP2	EBI address bus bit 18.
		SC0_DAT	I/O	MFP3	Smart Card 0 data pin.
		I²S0_DO	O	MFP4	I²S0 data output pin.
		SPI0_MISO	I/O	MFP5	SPI0 MISO (Master In, Slave Out) pin.
		UART4_TXD	O	MFP6	UART4 data transmitter output pin.
		TAMPER1	I/O	MFP10	TAMPER detector loop pin 1.
12	29	PF.6	I/O	MFP0	General purpose digital I/O pin.
		EBI_ADR19	O	MFP2	EBI address bus bit 19.
		SC0_CLK	O	MFP3	Smart Card 0 clock pin.
		I²S0_LRCK	O	MFP4	I²S0 left right channel clock output pin.
		SPI0_MOSI	I/O	MFP5	SPI0 MOSI (Master Out, Slave In) pin.
		UART4_RXD	I	MFP6	UART4 data receiver input pin.
		EBI_nCS0	O	MFP7	EBI chip select 0 output pin.
		TAMPER0	I/O	MFP10	TAMPER detector loop pin 0.
13	30	V_{DD}	P	MFP0	Power supply for I/O ports and LDO source for internal PLL and digital circuit.
14	31	PF.5	I/O	MFP0	General purpose digital I/O pin.
		UART2_RXD	I	MFP2	UART2 data receiver input pin.
		UART2_nCTS	I	MFP4	UART2 clear to Send input pin.
		BPWM0_CH4	I/O	MFP8	BPWM0 channel 4 output/capture input.
		EPWM0_SYNC_OUT	O	MFP9	EPWM0 counter synchronous trigger output pin.
		X32_IN	I	MFP10	External 32.768 kHz crystal input pin.
		EADC0_ST	I	MFP11	EADC0 external trigger input.
15	32	PF.4	I/O	MFP0	General purpose digital I/O pin.
		UART2_TXD	O	MFP2	UART2 data transmitter output pin.
		UART2_nRTS	O	MFP4	UART2 request to Send output pin.
		BPWM0_CH5	I/O	MFP8	BPWM0 channel 5 output/capture input.
		X32_OUT	O	MFP10	External 32.768 kHz crystal output pin.

64 Pin	128 Pin	Pin Name	Type	MFP	Description
	33	PH.4	I/O	MFP0	General purpose digital I/O pin.
		EBI_ADR3	O	MFP2	EBI address bus bit 3.
		SPI1_MISO	I/O	MFP3	SPI1 MISO (Master In, Slave Out) pin.
	34	PH.5	I/O	MFP0	General purpose digital I/O pin.
		EBI_ADR2	O	MFP2	EBI address bus bit 2.
		SPI1_MOSI	I/O	MFP3	SPI1 MOSI (Master Out, Slave In) pin.
	35	PH.6	I/O	MFP0	General purpose digital I/O pin.
		EBI_ADR1	O	MFP2	EBI address bus bit 1.
		SPI1_CLK	I/O	MFP3	SPI1 serial clock pin.
	36	PH.7	I/O	MFP0	General purpose digital I/O pin.
		EBI_ADR0	O	MFP2	EBI address bus bit 0.
		SPI1_SS	I/O	MFP3	SPI1 slave select pin.
16	37	PF.3	I/O	MFP0	General purpose digital I/O pin.
		EBI_nCS0	O	MFP2	EBI chip select 0 output pin.
		UART0_TXD	O	MFP3	UART0 data transmitter output pin.
		I^2C0_SCL	I/O	MFP4	I^2C0 clock pin.
		XT1_IN	I	MFP10	External 4~24 MHz (high speed) crystal input pin.
		BPWM1_CH0	I/O	MFP11	BPWM1 channel 0 output/capture input.
17	38	PF.2	I/O	MFP0	General purpose digital I/O pin.
		EBI_nCS1	O	MFP2	EBI chip select 1 output pin.
		UART0_RXD	I	MFP3	UART0 data receiver input pin.
		I^2C0_SDA	I/O	MFP4	I^2C0 data input/output pin.
		QSPI0_CLK	I/O	MFP5	QSPI0 serial clock pin.
		XT1_OUT	O	MFP10	External 4~24 MHz (high speed) crystal output pin.
		BPWM1_CH1	I/O	MFP11	BPWM1 channel 1 output/capture input.
	39	V_{SS}	P	MFP0	Ground pin for digital circuit.
	40	V_{DD}	P	MFP0	Power supply for I/O ports and LDO source for internal PLL and digital circuit.
	41	PE.8	I/O	MFP0	General purpose digital I/O pin.
		EBI_ADR10	O	MFP2	EBI address bus bit 10.
		I^2S0_BCLK	O	MFP4	I^2S0 bit clock output pin.
		SPI2_CLK	I/O	MFP5	SPI2 serial clock pin.
		USCI1_CTL1	I/O	MFP6	USCI1 control 1 pin.
		UART2_TXD	O	MFP7	UART2 data transmitter output pin.

64 Pin	128 Pin	Pin Name	Type	MFP	Description
		EPWM0_CH0	I/O	MFP10	EPWM0 channel 0 output/capture input.
		EPWM0_BRAKE0	I	MFP11	EPWM0 Brake 0 input pin.
		ECAP0_IC0	I	MFP12	Enhanced capture unit 0 input 0 pin.
		TRACE_DATA3	O	MFP14	ETM Trace Data 3 output pin
	42	PE.9	I/O	MFP0	General purpose digital I/O pin.
		EBI_ADR11	O	MFP2	EBI address bus bit 11.
		I^2S0_MCLK	O	MFP4	I^2S0 master clock output pin.
		SPI2_MISO	I/O	MFP5	SPI2 MISO (Master In, Slave Out) pin.
		USCI1_CTL0	I/O	MFP6	USCI1 control 0 pin.
		UART2_RXD	I	MFP7	UART2 data receiver input pin.
		EPWM0_CH1	I/O	MFP10	EPWM0 channel 1 output/capture input.
		EPWM0_BRAKE1	I	MFP11	EPWM0 Brake 1 input pin.
		ECAP0_IC1	I	MFP12	Enhanced capture unit 0 input 1 pin.
		TRACE_DATA2	O	MFP14	ETM Trace Data 2 output pin
	43	PE.10	I/O	MFP0	General purpose digital I/O pin.
		EBI_ADR12	O	MFP2	EBI address bus bit 12.
		I^2S0_DI	I	MFP4	I^2S0 data input pin.
		SPI2_MOSI	I/O	MFP5	SPI2 MOSI (Master Out, Slave In) pin.
		USCI1_DAT0	I/O	MFP6	USCI1 data 0 pin.
		UART3_TXD	O	MFP7	UART3 data transmitter output pin.
		EPWM0_CH2	I/O	MFP10	EPWM0 channel 2 output/capture input.
		EPWM1_BRAKE0	I	MFP11	EPWM1 Brake 0 input pin.
		ECAP0_IC2	I	MFP12	Enhanced capture unit 0 input 2 pin.
		TRACE_DATA1	O	MFP14	ETM Trace Data 1 output pin
	44	PE.11	I/O	MFP0	General purpose digital I/O pin.
		EBI_ADR13	O	MFP2	EBI address bus bit 13.
		I^2S0_DO	O	MFP4	I^2S0 data output pin.
		SPI2_SS	I/O	MFP5	SPI2 slave select pin.
		USCI1_DAT1	I/O	MFP6	USCI1 data 1 pin.
		UART3_RXD	I	MFP7	UART3 data receiver input pin.
		UART1_nCTS	I	MFP8	UART1 clear to Send input pin.
		EPWM0_CH3	I/O	MFP10	EPWM0 channel 3 output/capture input.
		EPWM1_BRAKE1	I	MFP11	EPWM1 Brake 1 input pin.
		ECAP1_IC2	I	MFP13	Enhanced capture unit 1 input 2 pin.

64 Pin	128 Pin	Pin Name	Type	MFP	Description
		TRACE_DATA0	O	MFP14	ETM Trace Data 0 output pin
	45	PE.12	I/O	MFP0	General purpose digital I/O pin.
		EBI_ADR14	O	MFP2	EBI address bus bit 14.
		I²S0_LRCK	O	MFP4	I²S0 left right channel clock output pin.
		SPI2_I2SMCLK	I/O	MFP5	SPI2 I²S master clock output pin
		USCI1_CLK	I/O	MFP6	USCI1 clock pin.
		UART1_nRTS	O	MFP8	UART1 request to Send output pin.
		EPWM0_CH4	I/O	MFP10	EPWM0 channel 4 output/capture input.
		ECAP1_IC1	I	MFP13	Enhanced capture unit 1 input 1 pin.
		TRACE_CLK	O	MFP14	ETM Trace Clock output pin
	46	PE.13	I/O	MFP0	General purpose digital I/O pin.
		EBI_ADR15	O	MFP2	EBI address bus bit 15.
		I²C0_SCL	I/O	MFP4	I²C0 clock pin.
		UART4_nRTS	O	MFP5	UART4 request to Send output pin.
		UART1_TXD	O	MFP8	UART1 data transmitter output pin.
		EPWM0_CH5	I/O	MFP10	EPWM0 channel 5 output/capture input.
		EPWM1_CH0	I/O	MFP11	EPWM1 channel 0 output/capture input.
		BPWM1_CH5	I/O	MFP12	BPWM1 channel 5 output/capture input.
		ECAP1_IC0	I	MFP13	Enhanced capture unit 1 input 0 pin.
	47	PC.8	I/O	MFP0	General purpose digital I/O pin.
		EBI_ADR16	O	MFP2	EBI address bus bit 16.
		I²C0_SDA	I/O	MFP4	I²C0 data input/output pin.
		UART4_nCTS	I	MFP5	UART4 clear to Send input pin.
		UART1_RXD	I	MFP8	UART1 data receiver input pin.
		EPWM1_CH1	I/O	MFP11	EPWM1 channel 1 output/capture input.
		BPWM1_CH4	I/O	MFP12	BPWM1 channel 4 output/capture input.
18	48	PC.7	I/O	MFP0	General purpose digital I/O pin.
		EBI_AD9	I/O	MFP2	EBI address/data bus bit 9.
		SPI1_MISO	I/O	MFP4	SPI1 MISO (Master In, Slave Out) pin.
		UART4_TXD	O	MFP5	UART4 data transmitter output pin.
		SC2_PWR	O	MFP6	Smart Card 2 power pin.
		UART0_nCTS	I	MFP7	UART0 clear to Send input pin.
		I²C1_SMBAL	O	MFP8	I²C1 SMBus SMBALTER pin
		EPWM1_CH2	I/O	MFP11	EPWM1 channel 2 output/capture input.

64 Pin	128 Pin	Pin Name	Type	MFP	Description
		BPWM1_CH0	I/O	MFP12	BPWM1 channel 0 output/capture input.
		TM0	I/O	MFP14	Timer0 event counter input/toggle output pin.
		INT3	I	MFP15	External interrupt 3 input pin.
19	49	PC.6	I/O	MFP0	General purpose digital I/O pin.
		EBI_AD8	I/O	MFP2	EBI address/data bus bit 8.
		SPI1_MOSI	I/O	MFP4	SPI1 MOSI (Master Out, Slave In) pin.
		UART4_RXD	I	MFP5	UART4 data receiver input pin.
		SC2_RST	O	MFP6	Smart Card 2 reset pin.
		UART0_nRTS	O	MFP7	UART0 request to Send output pin.
		I^2C1_SMBSUS	O	MFP8	I^2C1 SMBus SMBSUS pin (PMBus CONTROL pin)
		EPWM1_CH3	I/O	MFP11	EPWM1 channel 3 output/capture input.
		BPWM1_CH1	I/O	MFP12	BPWM1 channel 1 output/capture input.
		TM1	I/O	MFP14	Timer1 event counter input/toggle output pin.
		INT2	I	MFP15	External interrupt 2 input pin.
20	50	PA.7	I/O	MFP0	General purpose digital I/O pin.
		EBI_AD7	I/O	MFP2	EBI address/data bus bit 7.
		SPI1_CLK	I/O	MFP4	SPI1 serial clock pin.
		SC2_DAT	I/O	MFP6	Smart Card 2 data pin.
		UART0_TXD	O	MFP7	UART0 data transmitter output pin.
		I^2C1_SCL	I/O	MFP8	I^2C1 clock pin.
		EPWM1_CH4	I/O	MFP11	EPWM1 channel 4 output/capture input.
		BPWM1_CH2	I/O	MFP12	BPWM1 channel 2 output/capture input.
		ACMP0_WLAT	I	MFP13	Analog comparator 0 window latch input pin
		TM2	I/O	MFP14	Timer2 event counter input/toggle output pin.
		INT1	I	MFP15	External interrupt 1 input pin.
21	51	PA.6	I/O	MFP0	General purpose digital I/O pin.
		EBI_AD6	I/O	MFP2	EBI address/data bus bit 6.
		SPI1_SS	I/O	MFP4	SPI1 slave select pin.
		SD1_nCD	I	MFP5	SD/SDIO1 card detect input pin
		SC2_CLK	O	MFP6	Smart Card 2 clock pin.
		UART0_RXD	I	MFP7	UART0 data receiver input pin.
		I^2C1_SDA	I/O	MFP8	I^2C1 data input/output pin.
		EPWM1_CH5	I/O	MFP11	EPWM1 channel 5 output/capture input.
		BPWM1_CH3	I/O	MFP12	BPWM1 channel 3 output/capture input.

64 Pin	128 Pin	Pin Name	Type	MFP	Description
		ACMP1_WLAT	I	MFP13	Analog comparator 1 window latch input pin
		TM3	I/O	MFP14	Timer3 event counter input/toggle output pin.
		INT0	I	MFP15	External interrupt 0 input pin.
22	52	V_{SS}	P	MFP0	Ground pin for digital circuit.
23	53	V_{DD}	P	MFP0	Power supply for I/O ports and LDO source for internal PLL and digital circuit.
24	54	LDO_CAP	A	MFP0	LDO output pin. **Note:** This pin needs to be connected with an external capacitor.
25	55	PA.5	I/O	MFP0	General purpose digital I/O pin.
		SPIM_D2	I/O	MFP2	SPIM data 2 pin for Quad Mode I/O.
		QSPI0_MISO1	I/O	MFP3	QSPI0 MISO1 (Master In, Slave Out) pin.
		SPI1_I2SMCLK	I/O	MFP4	SPI1 I^2S master clock output pin
		SD1_CMD	I/O	MFP5	SD/SDIO1 command/response pin
		SC2_nCD	I	MFP6	Smart Card 2 card detect pin.
		UART0_nCTS	I	MFP7	UART0 clear to Send input pin.
		UART5_TXD	O	MFP8	UART5 data transmitter output pin.
		I^2C0_SCL	I/O	MFP9	I^2C0 clock pin.
		CAN0_TXD	O	MFP10	CAN0 bus transmitter output.
		BPWM0_CH5	I/O	MFP12	BPWM0 channel 5 output/capture input.
		EPWM0_CH0	I/O	MFP13	EPWM0 channel 0 output/capture input.
		QEI0_INDEX	I	MFP14	Quadrature encoder 0 index input
26	56	PA.4	I/O	MFP0	General purpose digital I/O pin.
		SPIM_D3	I/O	MFP2	SPIM data 3 pin for Quad Mode I/O.
		QSPI0_MOSI1	I/O	MFP3	QSPI0 MOSI1 (Master Out, Slave In) pin.
		SPI0_I2SMCLK	I/O	MFP4	SPI0 I^2S master clock output pin
		SD1_CLK	O	MFP5	SD/SDIO1 clock output pin
		SC0_nCD	I	MFP6	Smart Card 0 card detect pin.
		UART0_nRTS	O	MFP7	UART0 request to Send output pin.
		UART5_RXD	I	MFP8	UART5 data receiver input pin.
		I^2C0_SDA	I/O	MFP9	I^2C0 data input/output pin.
		CAN0_RXD	I	MFP10	CAN0 bus receiver input.
		BPWM0_CH4	I/O	MFP12	BPWM0 channel 4 output/capture input.
		EPWM0_CH1	I/O	MFP13	EPWM0 channel 1 output/capture input.
		QEI0_A	I	MFP14	Quadrature encoder 0 phase A input
27	57	PA.3	I/O	MFP0	General purpose digital I/O pin.

64 Pin	128 Pin	Pin Name	Type	MFP	Description
		SPIM_SS	I/O	MFP2	SPIM slave select pin.
		QSPI0_SS	I/O	MFP3	QSPI0 slave select pin.
		SPI0_SS	I/O	MFP4	SPI0 slave select pin.
		SD1_DAT3	I/O	MFP5	SD/SDIO1 data line bit 3.
		SC0_PWR	O	MFP6	Smart Card 0 power pin.
		UART4_TXD	O	MFP7	UART4 data transmitter output pin.
		UART1_TXD	O	MFP8	UART1 data transmitter output pin.
		I^2C1_SCL	I/O	MFP9	I^2C1 clock pin.
		BPWM0_CH3	I/O	MFP12	BPWM0 channel 3 output/capture input.
		EPWM0_CH2	I/O	MFP13	EPWM0 channel 2 output/capture input.
		QEI0_B	I	MFP14	Quadrature encoder 0 phase B input
28	58	PA.2	I/O	MFP0	General purpose digital I/O pin.
		SPIM_CLK	I/O	MFP2	SPIM serial clock pin.
		QSPI0_CLK	I/O	MFP3	QSPI0 serial clock pin.
		SPI0_CLK	I/O	MFP4	SPI0 serial clock pin.
		SD1_DAT2	I/O	MFP5	SD/SDIO1 data line bit 2.
		SC0_RST	O	MFP6	Smart Card 0 reset pin.
		UART4_RXD	I	MFP7	UART4 data receiver input pin.
		UART1_RXD	I	MFP8	UART1 data receiver input pin.
		I^2C1_SDA	I/O	MFP9	I^2C1 data input/output pin.
		BPWM0_CH2	I/O	MFP12	BPWM0 channel 2 output/capture input.
		EPWM0_CH3	I/O	MFP13	EPWM0 channel 3 output/capture input.
29	59	PA.1	I/O	MFP0	General purpose digital I/O pin.
		SPIM_MISO	I/O	MFP2	SPIM MISO (Master In, Slave Out) pin.
		QSPI0_MISO0	I/O	MFP3	QSPI0 MISO0 (Master In, Slave Out) pin.
		SPI0_MISO	I/O	MFP4	SPI0 MISO (Master In, Slave Out) pin.
		SD1_DAT1	I/O	MFP5	SD/SDIO1 data line bit 1.
		SC0_DAT	I/O	MFP6	Smart Card 0 data pin.
		UART0_TXD	O	MFP7	UART0 data transmitter output pin.
		UART1_nCTS	I	MFP8	UART1 clear to Send input pin.
		I^2C2_SCL	I/O	MFP9	I^2C2 clock pin.
		BPWM0_CH1	I/O	MFP12	BPWM0 channel 1 output/capture input.
		EPWM0_CH4	I/O	MFP13	EPWM0 channel 4 output/capture input.
		DAC1_ST	I	MFP15	DAC1 external trigger input.

64 Pin	128 Pin	Pin Name	Type	MFP	Description
30	60	PA.0	I/O	MFP0	General purpose digital I/O pin.
		SPIM_MOSI	I/O	MFP2	SPIM MOSI (Master Out, Slave In) pin.
		QSPI0_MOSI0	I/O	MFP3	QSPI0 MOSI0 (Master Out, Slave In) pin.
		SPI0_MOSI	I/O	MFP4	SPI0 MOSI (Master Out, Slave In) pin.
		SD1_DAT0	I/O	MFP5	SD/SDIO1 data line bit 0.
		SC0_CLK	O	MFP6	Smart Card 0 clock pin.
		UART0_RXD	I	MFP7	UART0 data receiver input pin.
		UART1_nRTS	O	MFP8	UART1 request to Send output pin.
		I^2C2_SDA	I/O	MFP9	I^2C2 data input/output pin.
		BPWM0_CH0	I/O	MFP12	BPWM0 channel 0 output/capture input.
		EPWM0_CH5	I/O	MFP13	EPWM0 channel 5 output/capture input.
		DAC0_ST	I	MFP15	DAC0 external trigger input.
31	61	V_{DDIO}	P	MFP0	Power supply for PA.0~PA.5.
	62	PE.14	I/O	MFP0	General purpose digital I/O pin.
		EBI_AD8	I/O	MFP2	EBI address/data bus bit 8.
		UART2_TXD	O	MFP3	UART2 data transmitter output pin.
		CAN0_TXD	O	MFP4	CAN0 bus transmitter output.
		SD1_nCD	I	MFP5	SD/SDIO1 card detect input pin
	63	PE.15	I/O	MFP0	General purpose digital I/O pin.
		EBI_AD9	I/O	MFP2	EBI address/data bus bit 9.
		UART2_RXD	I	MFP3	UART2 data receiver input pin.
		CAN0_RXD	I	MFP4	CAN0 bus receiver input.
32	64	nRESET	I	MFP0	External reset input: active LOW, with an internal pull-up. Set this pin low reset to initial state. **Note:** It is recommended to use 10 kΩ pull-up resistor and 10 uF capacitor on nRESET pin.
33	65	PF.0	I/O	MFP0	General purpose digital I/O pin.
		UART1_TXD	O	MFP2	UART1 data transmitter output pin.
		I^2C1_SCL	I/O	MFP3	I^2C1 clock pin.
		BPWM1_CH0	I/O	MFP12	BPWM1 channel 0 output/capture input.
		ICE_DAT	O	MFP14	Serial wired debugger data pin. **Note:** It is recommended to use 100 kΩ pull-up resistor on ICE_DAT pin.
34	66	PF.1	I/O	MFP0	General purpose digital I/O pin.
		UART1_RXD	I	MFP2	UART1 data receiver input pin.
		I^2C1_SDA	I/O	MFP3	I^2C1 data input/output pin.

64 Pin	128 Pin	Pin Name	Type	MFP	Description
		BPWM1_CH1	I/O	MFP12	BPWM1 channel 1 output/capture input.
		ICE_CLK	I	MFP14	Serial wired debugger clock pin. **Note:** It is recommended to use 100 kΩ pull-up resistor on ICE_CLK pin.
	67	PD.9	I/O	MFP0	General purpose digital I/O pin.
		EBI_AD7	I/O	MFP2	EBI address/data bus bit 7.
		I^2C2_SCL	I/O	MFP3	I^2C2 clock pin.
		UART2_nCTS	I	MFP4	UART2 clear to Send input pin.
	68	PD.8	I/O	MFP0	General purpose digital I/O pin.
		EBI_AD6	I/O	MFP2	EBI address/data bus bit 6.
		I^2C2_SDA	I/O	MFP3	I^2C2 data input/output pin.
		UART2_nRTS	O	MFP4	UART2 request to Send output pin.
35	69	PC.5	I/O	MFP0	General purpose digital I/O pin.
		EBI_AD5	I/O	MFP2	EBI address/data bus bit 5.
		SPIM_D2	I/O	MFP3	SPIM data 2 pin for Quad Mode I/O.
		QSPI0_MISO1	I/O	MFP4	QSPI0 MISO1 (Master In, Slave Out) pin.
		UART2_TXD	O	MFP8	UART2 data transmitter output pin.
		I^2C1_SCL	I/O	MFP9	I^2C1 clock pin.
		CAN0_TXD	O	MFP10	CAN0 bus transmitter output.
		UART4_TXD	O	MFP11	UART4 data transmitter output pin.
		EPWM1_CH0	I/O	MFP12	EPWM1 channel 0 output/capture input.
36	70	PC.4	I/O	MFP0	General purpose digital I/O pin.
		EBI_AD4	I/O	MFP2	EBI address/data bus bit 4.
		SPIM_D3	I/O	MFP3	SPIM data 3 pin for Quad Mode I/O.
		QSPI0_MOSI1	I/O	MFP4	QSPI0 MOSI1 (Master Out, Slave In) pin.
		SC1_nCD	I	MFP5	Smart Card 1 card detect pin.
		I^2S0_BCLK	O	MFP6	I^2S0 bit clock output pin.
		SPI1_I2SMCLK	I/O	MFP7	SPI1 I^2S master clock output pin
		UART2_RXD	I	MFP8	UART2 data receiver input pin.
		I^2C1_SDA	I/O	MFP9	I^2C1 data input/output pin.
		CAN0_RXD	I	MFP10	CAN0 bus receiver input.
		UART4_RXD	I	MFP11	UART4 data receiver input pin.
		EPWM1_CH1	I/O	MFP12	EPWM1 channel 1 output/capture input.
37	71	PC.3	I/O	MFP0	General purpose digital I/O pin.
		EBI_AD3	I/O	MFP2	EBI address/data bus bit 3.

64 Pin	128 Pin	Pin Name	Type	MFP	Description
		SPIM_SS	I/O	MFP3	SPIM slave select pin.
		QSPI0_SS	I/O	MFP4	QSPI0 slave select pin.
		SC1_PWR	O	MFP5	Smart Card 1 power pin.
		I²S0_MCLK	O	MFP6	I²S0 master clock output pin.
		SPI1_MISO	I/O	MFP7	SPI1 MISO (Master In, Slave Out) pin.
		UART2_nRTS	O	MFP8	UART2 request to Send output pin.
		I²C0_SMBAL	O	MFP9	I²C0 SMBus SMBALTER pin
		CAN1_TXD	O	MFP10	CAN1 bus transmitter output.
		UART3_TXD	O	MFP11	UART3 data transmitter output pin.
		EPWM1_CH2	I/O	MFP12	EPWM1 channel 2 output/capture input.
38	72	PC.2	I/O	MFP0	General purpose digital I/O pin.
		EBI_AD2	I/O	MFP2	EBI address/data bus bit 2.
		SPIM_CLK	I/O	MFP3	SPIM serial clock pin.
		QSPI0_CLK	I/O	MFP4	QSPI0 serial clock pin.
		SC1_RST	O	MFP5	Smart Card 1 reset pin.
		I²S0_DI	I	MFP6	I²S0 data input pin.
		SPI1_MOSI	I/O	MFP7	SPI1 MOSI (Master Out, Slave In) pin.
		UART2_nCTS	I	MFP8	UART2 clear to Send input pin.
		I²C0_SMBSUS	O	MFP9	I²C0 SMBus SMBSUS pin (PMBus CONTROL pin)
		CAN1_RXD	I	MFP10	CAN1 bus receiver input.
		UART3_RXD	I	MFP11	UART3 data receiver input pin.
		EPWM1_CH3	I/O	MFP12	EPWM1 channel 3 output/capture input.
39	73	PC.1	I/O	MFP0	General purpose digital I/O pin.
		EBI_AD1	I/O	MFP2	EBI address/data bus bit 1.
		SPIM_MISO	I/O	MFP3	SPIM MISO (Master In, Slave Out) pin.
		QSPI0_MISO0	I/O	MFP4	QSPI0 MISO0 (Master In, Slave Out) pin.
		SC1_DAT	I/O	MFP5	Smart Card 1 data pin.
		I²S0_DO	O	MFP6	I²S0 data output pin.
		SPI1_CLK	I/O	MFP7	SPI1 serial clock pin.
		UART2_TXD	O	MFP8	UART2 data transmitter output pin.
		I²C0_SCL	I/O	MFP9	I²C0 clock pin.
		EPWM1_CH4	I/O	MFP12	EPWM1 channel 4 output/capture input.
		ACMP0_O	O	MFP14	Analog comparator 0 output pin.
40	74	PC.0	I/O	MFP0	General purpose digital I/O pin.

64 Pin	128 Pin	Pin Name	Type	MFP	Description
		EBI_AD0	I/O	MFP2	EBI address/data bus bit 0.
		SPIM_MOSI	I/O	MFP3	SPIM MOSI (Master Out, Slave In) pin.
		QSPI0_MOSI0	I/O	MFP4	QSPI0 MOSI0 (Master Out, Slave In) pin.
		SC1_CLK	O	MFP5	Smart Card 1 clock pin.
		I^2S0_LRCK	O	MFP6	I^2S0 left right channel clock output pin.
		SPI1_SS	I/O	MFP7	SPI1 slave select pin.
		UART2_RXD	I	MFP8	UART2 data receiver input pin.
		I^2C0_SDA	I/O	MFP9	I^2C0 data input/output pin.
		EPWM1_CH5	I/O	MFP12	EPWM1 channel 5 output/capture input.
		ACMP1_O	O	MFP14	Analog comparator 1 output pin.
	75	V_{SS}	P	MFP0	Ground pin for digital circuit.
	76	V_{DD}	P	MFP0	Power supply for I/O ports and LDO source for internal PLL and digital circuit.
	77	PG.9	I/O	MFP0	General purpose digital I/O pin.
		EBI_AD0	I/O	MFP2	EBI address/data bus bit 0.
		SD1_DAT3	I/O	MFP3	SD/SDIO1 data line bit 3.
		SPIM_D2	I/O	MFP4	SPIM data 2 pin for Quad Mode I/O.
		BPWM0_CH5	I/O	MFP12	BPWM0 channel 5 output/capture input.
	78	PG.10	I/O	MFP0	General purpose digital I/O pin.
		EBI_AD1	I/O	MFP2	EBI address/data bus bit 1.
		SD1_DAT2	I/O	MFP3	SD/SDIO1 data line bit 2.
		SPIM_D3	I/O	MFP4	SPIM data 3 pin for Quad Mode I/O.
		BPWM0_CH4	I/O	MFP12	BPWM0 channel 4 output/capture input.
	79	PG.11	I/O	MFP0	General purpose digital I/O pin.
		EBI_AD2	I/O	MFP2	EBI address/data bus bit 2.
		SD1_DAT1	I/O	MFP3	SD/SDIO1 data line bit 1.
		SPIM_SS	I/O	MFP4	SPIM slave select pin.
		BPWM0_CH3	I/O	MFP12	BPWM0 channel 3 output/capture input.
	80	PG.12	I/O	MFP0	General purpose digital I/O pin.
		EBI_AD3	I/O	MFP2	EBI address/data bus bit 3.
		SD1_DAT0	I/O	MFP3	SD/SDIO1 data line bit 0.
		SPIM_CLK	I/O	MFP4	SPIM serial clock pin.
		BPWM0_CH2	I/O	MFP12	BPWM0 channel 2 output/capture input.
	81	PG.13	I/O	MFP0	General purpose digital I/O pin.

64 Pin	128 Pin	Pin Name	Type	MFP	Description
		EBI_AD4	I/O	MFP2	EBI address/data bus bit 4.
		SD1_CMD	I/O	MFP3	SD/SDIO1 command/response pin
		SPIM_MISO	I/O	MFP4	SPIM MISO (Master In, Slave Out) pin.
		BPWM0_CH1	I/O	MFP12	BPWM0 channel 1 output/capture input.
	82	PG.14	I/O	MFP0	General purpose digital I/O pin.
		EBI_AD5	I/O	MFP2	EBI address/data bus bit 5.
		SD1_CLK	O	MFP3	SD/SDIO1 clock output pin
		SPIM_MOSI	I/O	MFP4	SPIM MOSI (Master Out, Slave In) pin.
		BPWM0_CH0	I/O	MFP12	BPWM0 channel 0 output/capture input.
	83	PG.15	I/O	MFP0	General purpose digital I/O pin.
		SD1_nCD	I	MFP3	SD/SDIO1 card detect input pin
		CLKO	O	MFP14	Clock Out
		EADC0_ST	I	MFP15	EADC0 external trigger input.
	84	PD.13	I/O	MFP0	General purpose digital I/O pin.
		EBI_AD10	I/O	MFP2	EBI address/data bus bit 10.
		SD0_nCD	I	MFP3	SD/SDIO0 card detect input pin
		SPI0_I2SMCLK	I/O	MFP4	SPI0 I^2S master clock output pin
		SPI1_I2SMCLK	I/O	MFP5	SPI1 I^2S master clock output pin
		SC2_nCD	I	MFP7	Smart Card 2 card detect pin.
	85	PA.12	I/O	MFP0	General purpose digital I/O pin.
		I^2S0_BCLK	O	MFP2	I^2S0 bit clock output pin.
		UART4_TXD	O	MFP3	UART4 data transmitter output pin.
		I^2C1_SCL	I/O	MFP4	I^2C1 clock pin.
		SPI2_SS	I/O	MFP5	SPI2 slave select pin.
		CAN0_TXD	O	MFP6	CAN0 bus transmitter output.
		SC2_PWR	O	MFP7	Smart Card 2 power pin.
		BPWM1_CH2	I/O	MFP11	BPWM1 channel 2 output/capture input.
		QEI1_INDEX	I	MFP12	Quadrature encoder 1 index input
		USB_VBUS	P	MFP14	Power supply from USB host or HUB.
	86	PA.13	I/O	MFP0	General purpose digital I/O pin.
		I^2S0_MCLK	O	MFP2	I^2S0 master clock output pin.
		UART4_RXD	I	MFP3	UART4 data receiver input pin.
		I^2C1_SDA	I/O	MFP4	I^2C1 data input/output pin.
		SPI2_CLK	I/O	MFP5	SPI2 serial clock pin.

64 Pin	128 Pin	Pin Name	Type	MFP	Description
		CAN0_RXD	I	MFP6	CAN0 bus receiver input.
		SC2_RST	O	MFP7	Smart Card 2 reset pin.
		BPWM1_CH3	I/O	MFP11	BPWM1 channel 3 output/capture input.
		QEI1_A	I	MFP12	Quadrature encoder 1 phase A input
		USB_D-	A	MFP14	USB differential signal D-.
	87	PA.14	I/O	MFP0	General purpose digital I/O pin.
		I^2S0_DI	I	MFP2	I^2S0 data input pin.
		UART0_TXD	O	MFP3	UART0 data transmitter output pin.
		SPI2_MISO	I/O	MFP5	SPI2 MISO (Master In, Slave Out) pin.
		I^2C2_SCL	I/O	MFP6	I^2C2 clock pin.
		SC2_DAT	I/O	MFP7	Smart Card 2 data pin.
		BPWM1_CH4	I/O	MFP11	BPWM1 channel 4 output/capture input.
		QEI1_B	I	MFP12	Quadrature encoder 1 phase B input
		USB_D+	A	MFP14	USB differential signal D+.
	88	PA.15	I/O	MFP0	General purpose digital I/O pin.
		I^2S0_DO	O	MFP2	I^2S0 data output pin.
		UART0_RXD	I	MFP3	UART0 data receiver input pin.
		SPI2_MOSI	I/O	MFP5	SPI2 MOSI (Master Out, Slave In) pin.
		I^2C2_SDA	I/O	MFP6	I^2C2 data input/output pin.
		SC2_CLK	O	MFP7	Smart Card 2 clock pin.
		BPWM1_CH5	I/O	MFP11	BPWM1 channel 5 output/capture input.
		EPWM0_SYNC_IN	I	MFP12	EPWM0 counter synchronous trigger input pin.
		USB_OTG_ID	I	MFP14	USB_ identification.
41	89	HSUSB_VRES	A	MFP0	HSUSB module reference resister
42	90	$HSUSB_V_{DD33}$	P	MFP0	Power supply for HSUSB V_{DD33}
43	91	HSUSB_VBUS	P	MFP0	HSUSB Power supply from USB host or HUB.
44	92	HSUSB_D-	A	MFP0	HSUSB differential signal D-.
45	93	HSUSB_VSS	P	MFP0	Ground pin for HSUSB.
46	94	HSUSB_D+	A	MFP0	HSUSB differential signal D+.
47	95	$HSUSB_V_{DD12}_CAP$	A	MFP0	HSUSB Internal power regulator output 1.2V decoupling pin. **Note:** This pin needs to be connected with a 1uF capacitor.
48	96	HSUSB_ID	I	MFP0	HSUSB identification.
	97	PE.7	I/O	MFP0	General purpose digital I/O pin.
		SD0_CMD	I/O	MFP3	SD/SDIO0 command/response pin

64 Pin	128 Pin	Pin Name	Type	MFP	Description
		SPIM_D2	I/O	MFP4	SPIM data 2 pin for Quad Mode I/O.
		UART5_TXD	O	MFP8	UART5 data transmitter output pin.
		CAN1_TXD	O	MFP9	CAN1 bus transmitter output.
		QEI1_INDEX	I	MFP11	Quadrature encoder 1 index input
		EPWM0_CH0	I/O	MFP12	EPWM0 channel 0 output/capture input.
		BPWM0_CH5	I/O	MFP13	BPWM0 channel 5 output/capture input.
	98	PE.6	I/O	MFP0	General purpose digital I/O pin.
		SD0_CLK	O	MFP3	SD/SDIO0 clock output pin
		SPIM_D3	I/O	MFP4	SPIM data 3 pin for Quad Mode I/O.
		SPI3_I2SMCLK	I/O	MFP5	SPI3 I^2S master clock output pin
		SC0_nCD	I	MFP6	Smart Card 0 card detect pin.
		USCI0_CTL0	I/O	MFP7	USCI0 control 0 pin.
		UART5_RXD	I	MFP8	UART5 data receiver input pin.
		CAN1_RXD	I	MFP9	CAN1 bus receiver input.
		QEI1_A	I	MFP11	Quadrature encoder 1 phase A input
		EPWM0_CH1	I/O	MFP12	EPWM0 channel 1 output/capture input.
		BPWM0_CH4	I/O	MFP13	BPWM0 channel 4 output/capture input.
	99	PE.5	I/O	MFP0	General purpose digital I/O pin.
		EBI_nRD	O	MFP2	EBI read enable output pin.
		SD0_DAT3	I/O	MFP3	SD/SDIO0 data line bit 3.
		SPIM_SS	I/O	MFP4	SPIM slave select pin.
		SPI3_SS	I/O	MFP5	SPI3 slave select pin.
		SC0_PWR	O	MFP6	Smart Card 0 power pin.
		USCI0_CTL1	I/O	MFP7	USCI0 control 1 pin.
		QEI1_B	I	MFP11	Quadrature encoder 1 phase B input
		EPWM0_CH2	I/O	MFP12	EPWM0 channel 2 output/capture input.
		BPWM0_CH3	I/O	MFP13	BPWM0 channel 3 output/capture input.
	100	PE.4	I/O	MFP0	General purpose digital I/O pin.
		EBI_nWR	O	MFP2	EBI write enable output pin.
		SD0_DAT2	I/O	MFP3	SD/SDIO0 data line bit 2.
		SPIM_CLK	I/O	MFP4	SPIM serial clock pin.
		SPI3_CLK	I/O	MFP5	SPI3 serial clock pin.
		SC0_RST	O	MFP6	Smart Card 0 reset pin.
		USCI0_DAT1	I/O	MFP7	USCI0 data 1 pin.

64 Pin	128 Pin	Pin Name	Type	MFP	Description
		QEI0_INDEX	I	MFP11	Quadrature encoder 0 index input
		EPWM0_CH3	I/O	MFP12	EPWM0 channel 3 output/capture input.
		BPWM0_CH2	I/O	MFP13	BPWM0 channel 2 output/capture input.
	101	PE.3	I/O	MFP0	General purpose digital I/O pin.
		EBI_MCLK	O	MFP2	EBI external clock output pin.
		SD0_DAT1	I/O	MFP3	SD/SDIO0 data line bit 1.
		SPIM_MISO	I/O	MFP4	SPIM MISO (Master In, Slave Out) pin.
		SPI3_MISO	I/O	MFP5	SPI3 MISO (Master In, Slave Out) pin.
		SC0_DAT	I/O	MFP6	Smart Card 0 data pin.
		USCI0_DAT0	I/O	MFP7	USCI0 data 0 pin.
		QEI0_A	I	MFP11	Quadrature encoder 0 phase A input
		EPWM0_CH4	I/O	MFP12	EPWM0 channel 4 output/capture input.
		BPWM0_CH1	I/O	MFP13	BPWM0 channel 1 output/capture input.
	102	PE.2	I/O	MFP0	General purpose digital I/O pin.
		EBI_ALE	O	MFP2	EBI address latch enable output pin.
		SD0_DAT0	I/O	MFP3	SD/SDIO0 data line bit 0.
		SPIM_MOSI	I/O	MFP4	SPIM MOSI (Master Out, Slave In) pin.
		SPI3_MOSI	I/O	MFP5	SPI3 MOSI (Master Out, Slave In) pin.
		SC0_CLK	O	MFP6	Smart Card 0 clock pin.
		USCI0_CLK	I/O	MFP7	USCI0 clock pin.
		QEI0_B	I	MFP11	Quadrature encoder 0 phase B input
		EPWM0_CH5	I/O	MFP12	EPWM0 channel 5 output/capture input.
		BPWM0_CH0	I/O	MFP13	BPWM0 channel 0 output/capture input.
	103	V_{SS}	P	MFP0	Ground pin for digital circuit.
	104	V_{DD}	P	MFP0	Power supply for I/O ports and LDO source for internal PLL and digital circuit.
	105	PE.1	I/O	MFP0	General purpose digital I/O pin.
		EBI_AD10	I/O	MFP2	EBI address/data bus bit 10.
		QSPI0_MISO0	I/O	MFP3	QSPI0 MISO0 (Master In, Slave Out) pin.
		SC2_DAT	I/O	MFP4	Smart Card 2 data pin.
		I^2S0_BCLK	O	MFP5	I^2S0 bit clock output pin.
		SPI1_MISO	I/O	MFP6	SPI1 MISO (Master In, Slave Out) pin.
		UART3_TXD	O	MFP7	UART3 data transmitter output pin.
		I^2C1_SCL	I/O	MFP8	I^2C1 clock pin.

64 Pin	128 Pin	Pin Name	Type	MFP	Description
		UART4_nCTS	I	MFP9	UART4 clear to Send input pin.
	106	PE.0	I/O	MFP0	General purpose digital I/O pin.
		EBI_AD11	I/O	MFP2	EBI address/data bus bit 11.
		QSPI0_MOSI0	I/O	MFP3	QSPI0 MOSI0 (Master Out, Slave In) pin.
		SC2_CLK	O	MFP4	Smart Card 2 clock pin.
		I^2S0_MCLK	O	MFP5	I^2S0 master clock output pin.
		SPI1_MOSI	I/O	MFP6	SPI1 MOSI (Master Out, Slave In) pin.
		UART3_RXD	I	MFP7	UART3 data receiver input pin.
		I^2C1_SDA	I/O	MFP8	I^2C1 data input/output pin.
		UART4_nRTS	O	MFP9	UART4 request to Send output pin.
	107	PH.8	I/O	MFP0	General purpose digital I/O pin.
		EBI_AD12	I/O	MFP2	EBI address/data bus bit 12.
		QSPI0_CLK	I/O	MFP3	QSPI0 serial clock pin.
		SC2_PWR	O	MFP4	Smart Card 2 power pin.
		I^2S0_DI	I	MFP5	I^2S0 data input pin.
		SPI1_CLK	I/O	MFP6	SPI1 serial clock pin.
		UART3_nRTS	O	MFP7	UART3 request to Send output pin.
		I^2C1_SMBAL	O	MFP8	I^2C1 SMBus SMBALTER pin
		I^2C2_SCL	I/O	MFP9	I^2C2 clock pin.
		UART1_TXD	O	MFP10	UART1 data transmitter output pin.
	108	PH.9	I/O	MFP0	General purpose digital I/O pin.
		EBI_AD13	I/O	MFP2	EBI address/data bus bit 13.
		QSPI0_SS	I/O	MFP3	QSPI0 slave select pin.
		SC2_RST	O	MFP4	Smart Card 2 reset pin.
		I^2S0_DO	O	MFP5	I^2S0 data output pin.
		SPI1_SS	I/O	MFP6	SPI1 slave select pin.
		UART3_nCTS	I	MFP7	UART3 clear to Send input pin.
		I^2C1_SMBSUS	O	MFP8	I^2C1 SMBus SMBSUS pin (PMBus CONTROL pin)
		I^2C2_SDA	I/O	MFP9	I^2C2 data input/output pin.
		UART1_RXD	I	MFP10	UART1 data receiver input pin.
	109	PH.10	I/O	MFP0	General purpose digital I/O pin.
		EBI_AD14	I/O	MFP2	EBI address/data bus bit 14.
		QSPI0_MISO1	I/O	MFP3	QSPI0 MISO1 (Master In, Slave Out) pin.
		SC2_nCD	I	MFP4	Smart Card 2 card detect pin.

64 Pin	128 Pin	Pin Name	Type	MFP	Description
		I²S0_LRCK	O	MFP5	I²S0 left right channel clock output pin.
		SPI1_I2SMCLK	I/O	MFP6	SPI1 I²S master clock output pin
		UART4_TXD	O	MFP7	UART4 data transmitter output pin.
		UART0_TXD	O	MFP8	UART0 data transmitter output pin.
	110	PH.11	I/O	MFP0	General purpose digital I/O pin.
		EBI_AD15	I/O	MFP2	EBI address/data bus bit 15.
		QSPI0_MOSI1	I/O	MFP3	QSPI0 MOSI1 (Master Out, Slave In) pin.
		UART4_RXD	I	MFP7	UART4 data receiver input pin.
		UART0_RXD	I	MFP8	UART0 data receiver input pin.
		EPWM0_CH5	I/O	MFP11	EPWM0 channel 5 output/capture input.
	111	PD.14	I/O	MFP0	General purpose digital I/O pin.
		EBI_nCS0	O	MFP2	EBI chip select 0 output pin.
		SPI3_I2SMCLK	I/O	MFP3	SPI3 I²S master clock output pin
		SC1_nCD	I	MFP4	Smart Card 1 card detect pin.
		EPWM0_CH4	I/O	MFP11	EPWM0 channel 4 output/capture input.
49	112	V_{SS}	P	MFP0	Ground pin for digital circuit.
50	113	LDO_CAP	A	MFP0	LDO output pin. **Note:** This pin needs to be connected with an external capacitor.
51	114	V_{DD}	P	MFP0	Power supply for I/O ports and LDO source for internal PLL and digital circuit.
52	115	PC.14	I/O	MFP0	General purpose digital I/O pin.
		EBI_AD11	I/O	MFP2	EBI address/data bus bit 11.
		SC1_nCD	I	MFP3	Smart Card 1 card detect pin.
		SPI0_I2SMCLK	I/O	MFP4	SPI0 I²S master clock output pin
		USCI0_CTL0	I/O	MFP5	USCI0 control 0 pin.
		QSPI0_CLK	I/O	MFP6	QSPI0 serial clock pin.
		EPWM0_SYNC_IN	I	MFP11	EPWM0 counter synchronous trigger input pin.
		ETM_TRACE_CLK	I	MFP12	ETM receiver Trace Clock input pin
		TM1	I/O	MFP13	Timer1 event counter input/toggle output pin.
		USB_VBUS_ST	I	MFP14	USB external V_{BUS} regulator status pin.
		HSUSB_VBUS_ST	I	MFP15	HSUSB external V_{BUS} regulator status pin.
53	116	PB.15	I/O	MFP0	General purpose digital I/O pin.
		EADC0_CH15	A	MFP1	EADC0 channel 15 analog input.
		EBI_AD12	I/O	MFP2	EBI address/data bus bit 12.
		SC1_PWR	O	MFP3	Smart Card 1 power pin.

64 Pin	128 Pin	Pin Name	Type	MFP	Description
		SPI0_SS	I/O	MFP4	SPI0 slave select pin.
		USCI0_CTL1	I/O	MFP5	USCI0 control 1 pin.
		UART0_nCTS	I	MFP6	UART0 clear to Send input pin.
		UART3_TXD	O	MFP7	UART3 data transmitter output pin.
		I²C2_SMBAL	O	MFP8	I²C2 SMBus SMBALTER pin
		EPWM1_CH0	I/O	MFP11	EPWM1 channel 0 output/capture input.
		ETM_TRACE_DATA0	I	MFP12	ETM receiver Trace Data 0 input pin
		TM0_EXT	I/O	MFP13	Timer0 event counter input/toggle output pin.
		USB_VBUS_EN	O	MFP14	USB external V_{BUS} regulator enable pin.
		HSUSB_VBUS_EN	O	MFP15	HSUSB external V_{BUS} regulator enable pin.
54	117	PB.14	I/O	MFP0	General purpose digital I/O pin.
		EADC0_CH14	A	MFP1	EADC0 channel 14 analog input.
		EBI_AD13	I/O	MFP2	EBI address/data bus bit 13.
		SC1_RST	O	MFP3	Smart Card 1 reset pin.
		SPI0_CLK	I/O	MFP4	SPI0 serial clock pin.
		USCI0_DAT1	I/O	MFP5	USCI0 data 1 pin.
		UART0_nRTS	O	MFP6	UART0 request to Send output pin.
		UART3_RXD	I	MFP7	UART3 data receiver input pin.
		I²C2_SMBSUS	O	MFP8	I²C2 SMBus SMBSUS pin (PMBus CONTROL pin)
		EPWM1_CH1	I/O	MFP11	EPWM1 channel 1 output/capture input.
		ETM_TRACE_DATA1	I	MFP12	ETM receiver Trace Data 1 input pin
		TM1_EXT	I/O	MFP13	Timer1 event counter input/toggle output pin.
		CLKO	O	MFP14	Clock Out
55	118	PB.13	I/O	MFP0	General purpose digital I/O pin.
		EADC0_CH13	A	MFP1	EADC0 channel 13 analog input.
		DAC1_OUT	A	MFP1	DAC1 channel analog output.
		ACMP0_P3	A	MFP1	Analog comparator 0 positive input 3 pin.
		ACMP1_P3	A	MFP1	Analog comparator 1 positive input 3 pin.
		EBI_AD14	I/O	MFP2	EBI address/data bus bit 14.
		SC1_DAT	I/O	MFP3	Smart Card 1 data pin.
		SPI0_MISO	I/O	MFP4	SPI0 MISO (Master In, Slave Out) pin.
		USCI0_DAT0	I/O	MFP5	USCI0 data 0 pin.
		UART0_TXD	O	MFP6	UART0 data transmitter output pin.
		UART3_nRTS	O	MFP7	UART3 request to Send output pin.

64 Pin	128 Pin	Pin Name	Type	MFP	Description
		I²C2_SCL	I/O	MFP8	I²C2 clock pin.
		EPWM1_CH2	I/O	MFP11	EPWM1 channel 2 output/capture input.
		ETM_TRACE_DATA2	I	MFP12	ETM receiver Trace Data 2 input pin
		TM2_EXT	I/O	MFP13	Timer2 event counter input/toggle output pin.
56	119	PB.12	I/O	MFP0	General purpose digital I/O pin.
		EADC0_CH12	A	MFP1	EADC0 channel 12 analog input.
		DAC0_OUT	A	MFP1	DAC0 channel analog output.
		ACMP0_P2	A	MFP1	Analog comparator 0 positive input 2 pin.
		ACMP1_P2	A	MFP1	Analog comparator 1 positive input 2 pin.
		EBI_AD15	I/O	MFP2	EBI address/data bus bit 15.
		SC1_CLK	O	MFP3	Smart Card 1 clock pin.
		SPI0_MOSI	I/O	MFP4	SPI0 MOSI (Master Out, Slave In) pin.
		USCI0_CLK	I/O	MFP5	USCI0 clock pin.
		UART0_RXD	I	MFP6	UART0 data receiver input pin.
		UART3_nCTS	I	MFP7	UART3 clear to Send input pin.
		I²C2_SDA	I/O	MFP8	I²C2 data input/output pin.
		SD0_nCD	I	MFP9	SD/SDIO0 card detect input pin
		EPWM1_CH3	I/O	MFP11	EPWM1 channel 3 output/capture input.
		ETM_TRACE_DATA3	I	MFP12	ETM receiver Trace Data 3 input pin
		TM3_EXT	I/O	MFP13	Timer3 event counter input/toggle output pin.
57	120	AV_{DD}	P	MFP0	Power supply for internal analog circuit.
58	121	V_{REF}	A	MFP0	ADC reference voltage input. **Note:** This pin needs to be connected with a 1uF capacitor.
59	122	AV_{SS}	P	MFP0	Ground pin for analog circuit.
60	123	PB.11	I/O	MFP0	General purpose digital I/O pin.
		EADC0_CH11	A	MFP1	EADC0 channel 11 analog input.
		EBI_ADR16	O	MFP2	EBI address bus bit 16.
		UART0_nCTS	I	MFP5	UART0 clear to Send input pin.
		UART4_TXD	O	MFP6	UART4 data transmitter output pin.
		I²C1_SCL	I/O	MFP7	I²C1 clock pin.
		CAN0_TXD	O	MFP8	CAN0 bus transmitter output.
		SPI0_I2SMCLK	I/O	MFP9	SPI0 I²S master clock output pin
		BPWM1_CH0	I/O	MFP10	BPWM1 channel 0 output/capture input.
		SPI3_CLK	I/O	MFP11	SPI3 serial clock pin.

64 Pin	128 Pin	Pin Name	Type	MFP	Description
		HSUSB_VBUS_ST	I	MFP14	HSUSB external V_{BUS} regulator status pin.
61	124	PB.10	I/O	MFP0	General purpose digital I/O pin.
		EADC0_CH10	A	MFP1	EADC0 channel 10 analog input.
		EBI_ADR17	O	MFP2	EBI address bus bit 17.
		USCI1_CTL0	I/O	MFP4	USCI1 control 0 pin.
		UART0_nRTS	O	MFP5	UART0 request to Send output pin.
		UART4_RXD	I	MFP6	UART4 data receiver input pin.
		I^2C1_SDA	I/O	MFP7	I^2C1 data input/output pin.
		CAN0_RXD	I	MFP8	CAN0 bus receiver input.
		BPWM1_CH1	I/O	MFP10	BPWM1 channel 1 output/capture input.
		SPI3_SS	I/O	MFP11	SPI3 slave select pin.
		HSUSB_VBUS_EN	O	MFP14	HSUSB external V_{BUS} regulator enable pin.
62	125	PB.9	I/O	MFP0	General purpose digital I/O pin.
		EADC0_CH9	A	MFP1	EADC0 channel 9 analog input.
		EBI_ADR18	O	MFP2	EBI address bus bit 18.
		USCI1_CTL1	I/O	MFP4	USCI1 control 1 pin.
		UART0_TXD	O	MFP5	UART0 data transmitter output pin.
		UART1_nCTS	I	MFP6	UART1 clear to Send input pin.
		I^2C1_SMBAL	O	MFP7	I^2C1 SMBus SMBALTER pin
		BPWM1_CH2	I/O	MFP10	BPWM1 channel 2 output/capture input.
		SPI3_MISO	I/O	MFP11	SPI3 MISO (Master In, Slave Out) pin.
		INT7	I	MFP13	External interrupt 7 input pin.
63	126	PB.8	I/O	MFP0	General purpose digital I/O pin.
		EADC0_CH8	A	MFP1	EADC0 channel 8 analog input.
		EBI_ADR19	O	MFP2	EBI address bus bit 19.
		USCI1_CLK	I/O	MFP4	USCI1 clock pin.
		UART0_RXD	I	MFP5	UART0 data receiver input pin.
		UART1_nRTS	O	MFP6	UART1 request to Send output pin.
		I^2C1_SMBSUS	O	MFP7	I^2C1 SMBus SMBSUS pin (PMBus CONTROL pin)
		BPWM1_CH3	I/O	MFP10	BPWM1 channel 3 output/capture input.
		SPI3_MOSI	I/O	MFP11	SPI3 MOSI (Master Out, Slave In) pin.
		INT6	I	MFP13	External interrupt 6 input pin.
64	127	PB.7	I/O	MFP0	General purpose digital I/O pin.
		EADC0_CH7	A	MFP1	EADC0 channel 7 analog input.

64 Pin	128 Pin	Pin Name	Type	MFP	Description
		EBI_nWRL	O	MFP2	EBI low byte write enable output pin.
		USCI1_DAT0	I/O	MFP4	USCI1 data 0 pin.
		CAN1_TXD	O	MFP5	CAN1 bus transmitter output.
		UART1_TXD	O	MFP6	UART1 data transmitter output pin.
		SD1_CMD	I/O	MFP7	SD/SDIO1 command/response pin
		EBI_nCS0	O	MFP8	EBI chip select 0 output pin.
		BPWM1_CH4	I/O	MFP10	BPWM1 channel 4 output/capture input.
		EPWM1_BRAKE0	I	MFP11	EPWM1 Brake 0 input pin.
		EPWM1_CH4	I/O	MFP12	EPWM1 channel 4 output/capture input.
		INT5	I	MFP13	External interrupt 5 input pin.
		USB_VBUS_ST	I	MFP14	USB external V_{BUS} regulator status pin.
		ACMP0_O	O	MFP15	Analog comparator 0 output pin.
1	128	PB.6	I/O	MFP0	General purpose digital I/O pin.
		EADC0_CH6	A	MFP1	EADC0 channel 6 analog input.
		EBI_nWRH	O	MFP2	EBI high byte write enable output pin
		USCI1_DAT1	I/O	MFP4	USCI1 data 1 pin.
		CAN1_RXD	I	MFP5	CAN1 bus receiver input.
		UART1_RXD	I	MFP6	UART1 data receiver input pin.
		SD1_CLK	O	MFP7	SD/SDIO1 clock output pin
		EBI_nCS1	O	MFP8	EBI chip select 1 output pin.
		BPWM1_CH5	I/O	MFP10	BPWM1 channel 5 output/capture input.
		EPWM1_BRAKE1	I	MFP11	EPWM1 Brake 1 input pin.
		EPWM1_CH5	I/O	MFP12	EPWM1 channel 5 output/capture input.
		INT4	I	MFP13	External interrupt 4 input pin.
		USB_VBUS_EN	O	MFP14	USB external V_{BUS} regulator enable pin.
		ACMP1_O	O	MFP15	Analog comparator 1 output pin.

4.2.4 M484 Series Pin Description

Note: PA.15 MFP can only be as USB_OTG_ID when enable full-Speed USB.

64 Pin	64 Pin 2 USB	128 Pin	Pin Name	Type	MFP	Description
2	2	1	PB.5	I/O	MFP0	General purpose digital I/O pin.
			EADC0_CH5	A	MFP1	EADC0 channel 5 analog input.
			ACMP1_N	A	MFP1	Analog comparator 1 negative input pin.
			EBI_ADR0	O	MFP2	EBI address bus bit 0.
			SD0_DAT3	I/O	MFP3	SD/SDIO0 data line bit 3.
			SPI1_MISO	I/O	MFP5	SPI1 MISO (Master In, Slave Out) pin.
			I2C0_SCL	I/O	MFP6	I2C0 clock pin.
			UART5_TXD	O	MFP7	UART5 data transmitter output pin.
			USCI1_CTL0	I/O	MFP8	USCI1 control 0 pin.
			SC0_CLK	O	MFP9	Smart Card 0 clock pin.
			I2S0_BCLK	O	MFP10	I2S0 bit clock output pin.
			EPWM0_CH0	I/O	MFP11	EPWM0 channel 0 output/capture input.
			TM0	I/O	MFP14	Timer0 event counter input/toggle output pin.
			INT0	I	MFP15	External interrupt 0 input pin.
3	3	2	PB.4	I/O	MFP0	General purpose digital I/O pin.
			EADC0_CH4	A	MFP1	EADC0 channel 4 analog input.
			ACMP1_P1	A	MFP1	Analog comparator 1 positive input 1 pin.
			EBI_ADR1	O	MFP2	EBI address bus bit 1.
			SD0_DAT2	I/O	MFP3	SD/SDIO0 data line bit 2.
			SPI1_MOSI	I/O	MFP5	SPI1 MOSI (Master Out, Slave In) pin.
			I2C0_SDA	I/O	MFP6	I2C0 data input/output pin.
			UART5_RXD	I	MFP7	UART5 data receiver input pin.
			USCI1_CTL1	I/O	MFP8	USCI1 control 1 pin.
			SC0_DAT	I/O	MFP9	Smart Card 0 data pin.
			I2S0_MCLK	O	MFP10	I2S0 master clock output pin.
			EPWM0_CH1	I/O	MFP11	EPWM0 channel 1 output/capture input.
			TM1	I/O	MFP14	Timer1 event counter input/toggle output pin.
			INT1	I	MFP15	External interrupt 1 input pin.
4	4	3	PB.3	I/O	MFP0	General purpose digital I/O pin.
			EADC0_CH3	A	MFP1	EADC0 channel 3 analog input.
			ACMP0_N	A	MFP1	Analog comparator 0 negative input pin.
			EBI_ADR2	O	MFP2	EBI address bus bit 2.

64 Pin	64 Pin 2 USB	128 Pin	Pin Name	Type	MFP	Description
			SD0_DAT1	I/O	MFP3	SD/SDIO0 data line bit 1.
			SPI1_CLK	I/O	MFP5	SPI1 serial clock pin.
			UART1_TXD	O	MFP6	UART1 data transmitter output pin.
			UART5_nRTS	O	MFP7	UART5 request to Send output pin.
			USCI1_DAT1	I/O	MFP8	USCI1 data 1 pin.
			SC0_RST	O	MFP9	Smart Card 0 reset pin.
			I2S0_DI	I	MFP10	I2S0 data input pin.
			EPWM0_CH2	I/O	MFP11	EPWM0 channel 2 output/capture input.
			TM2	I/O	MFP14	Timer2 event counter input/toggle output pin.
			INT2	I	MFP15	External interrupt 2 input pin.
5	5	4	PB.2	I/O	MFP0	General purpose digital I/O pin.
			EADC0_CH2	A	MFP1	EADC0 channel 2 analog input.
			ACMP0_P1	A	MFP1	Analog comparator 0 positive input 1 pin.
			OPA0_O	A	MFP1	Operational amplifier 0 output pin.
			EBI_ADR3	O	MFP2	EBI address bus bit 3.
			SD0_DAT0	I/O	MFP3	SD/SDIO0 data line bit 0.
			SPI1_SS	I/O	MFP5	SPI1 slave select pin.
			UART1_RXD	I	MFP6	UART1 data receiver input pin.
			UART5_nCTS	I	MFP7	UART5 clear to Send input pin.
			USCI1_DAT0	I/O	MFP8	USCI1 data 0 pin.
			SC0_PWR	O	MFP9	Smart Card 0 power pin.
			I2S0_DO	O	MFP10	I2S0 data output pin.
			EPWM0_CH3	I/O	MFP11	EPWM0 channel 3 output/capture input.
			TM3	I/O	MFP14	Timer3 event counter input/toggle output pin.
			INT3	I	MFP15	External interrupt 3 input pin.
		5	PC.12	I/O	MFP0	General purpose digital I/O pin.
			EBI_ADR4	O	MFP2	EBI address bus bit 4.
			UART0_TXD	O	MFP3	UART0 data transmitter output pin.
			I2C0_SCL	I/O	MFP4	I2C0 clock pin.
			SPI3_MISO	I/O	MFP6	SPI3 MISO (Master In, Slave Out) pin.
			SC0_nCD	I	MFP9	Smart Card 0 card detect pin.
			ECAP1_IC2	I	MFP11	Enhanced capture unit 1 input 2 pin.
			EPWM1_CH0	I/O	MFP12	EPWM1 channel 0 output/capture input.
			ACMP0_O	O	MFP14	Analog comparator 0 output pin.

64 Pin	64 Pin 2 USB	128 Pin	Pin Name	Type	MFP	Description
		6	PC.11	I/O	MFP0	General purpose digital I/O pin.
			EBI_ADR5	O	MFP2	EBI address bus bit 5.
			UART0_RXD	I	MFP3	UART0 data receiver input pin.
			I2C0_SDA	I/O	MFP4	I2C0 data input/output pin.
			SPI3_MOSI	I/O	MFP6	SPI3 MOSI (Master Out, Slave In) pin.
			ECAP1_IC1	I	MFP11	Enhanced capture unit 1 input 1 pin.
			EPWM1_CH1	I/O	MFP12	EPWM1 channel 1 output/capture input.
			ACMP1_O	O	MFP14	Analog comparator 1 output pin.
		7	PC.10	I/O	MFP0	General purpose digital I/O pin.
			EBI_ADR6	O	MFP2	EBI address bus bit 6.
			SPI3_CLK	I/O	MFP6	SPI3 serial clock pin.
			UART3_TXD	O	MFP7	UART3 data transmitter output pin.
			ECAP1_IC0	I	MFP11	Enhanced capture unit 1 input 0 pin.
			EPWM1_CH2	I/O	MFP12	EPWM1 channel 2 output/capture input.
		8	PC.9	I/O	MFP0	General purpose digital I/O pin.
			EBI_ADR7	O	MFP2	EBI address bus bit 7.
			SPI3_SS	I/O	MFP6	SPI3 slave select pin.
			UART3_RXD	I	MFP7	UART3 data receiver input pin.
			EPWM1_CH3	I/O	MFP12	EPWM1 channel 3 output/capture input.
6	6	9	PB.1	I/O	MFP0	General purpose digital I/O pin.
			EADC0_CH1	A	MFP1	EADC0 channel 1 analog input.
			OPA0_N	A	MFP1	Operational amplifier 0 negative input pin.
			EBI_ADR8	O	MFP2	EBI address bus bit 8.
			SD0_CLK	O	MFP3	SD/SDIO0 clock output pin
			SPI1_I2SMCLK	I/O	MFP5	SPI1 I2S master clock output pin
			SPI3_I2SMCLK	I/O	MFP6	SPI3 I2S master clock output pin
			UART2_TXD	O	MFP7	UART2 data transmitter output pin.
			USCI1_CLK	I/O	MFP8	USCI1 clock pin.
			I2C1_SCL	I/O	MFP9	I2C1 clock pin.
			I2S0_LRCK	O	MFP10	I2S0 left right channel clock output pin.
			EPWM0_CH4	I/O	MFP11	EPWM0 channel 4 output/capture input.
			EPWM1_CH4	I/O	MFP12	EPWM1 channel 4 output/capture input.
			EPWM0_BRAKE0	I	MFP13	EPWM0 Brake 0 input pin.
7	7	10	PB.0	I/O	MFP0	General purpose digital I/O pin.

64 Pin	64 Pin 2 USB	128 Pin	Pin Name	Type	MFP	Description
			EADC0_CH0	A	MFP1	EADC0 channel 0 analog input.
			OPA0_P	A	MFP1	Operational amplifier 0 positive input pin.
			EBI_ADR9	O	MFP2	EBI address bus bit 9.
			SD0_CMD	I/O	MFP3	SD/SDIO0 command/response pin
			UART2_RXD	I	MFP7	UART2 data receiver input pin.
			SPI0_I2SMCLK	I/O	MFP8	SPI0 I2S master clock output pin
			I2C1_SDA	I/O	MFP9	I2C1 data input/output pin.
			EPWM0_CH5	I/O	MFP11	EPWM0 channel 5 output/capture input.
			EPWM1_CH5	I/O	MFP12	EPWM1 channel 5 output/capture input.
			EPWM0_BRAKE1	I	MFP13	EPWM0 Brake 1 input pin.
		11	V_{SS}	P	MFP0	Ground pin for digital circuit.
		12	V_{DD}	P	MFP0	Power supply for I/O ports and LDO source for internal PLL and digital circuit.
8	8	13	PA.11	I/O	MFP0	General purpose digital I/O pin.
			ACMP0_P0	A	MFP1	Analog comparator 0 positive input 0 pin.
			EBI_nRD	O	MFP2	EBI read enable output pin.
			SC2_PWR	O	MFP3	Smart Card 2 power pin.
			SPI2_SS	I/O	MFP4	SPI2 slave select pin.
			SD1_DAT3	I/O	MFP5	SD/SDIO1 data line bit 3.
			USCI0_CLK	I/O	MFP6	USCI0 clock pin.
			I2C2_SCL	I/O	MFP7	I2C2 clock pin.
			BPWM0_CH0	I/O	MFP9	BPWM0 channel 0 output/capture input.
			EPWM0_SYNC_OUT	O	MFP10	EPWM0 counter synchronous trigger output pin.
			TM0_EXT	I/O	MFP13	Timer0 external capture input/toggle output pin.
			DAC1_ST	I	MFP14	DAC1 external trigger input.
9	9	14	PA.10	I/O	MFP0	General purpose digital I/O pin.
			ACMP1_P0	A	MFP1	Analog comparator 1 positive input 0 pin.
			OPA1_O	A	MFP1	Operational amplifier 1 output pin.
			EBI_nWR	O	MFP2	EBI write enable output pin.
			SC2_RST	O	MFP3	Smart Card 2 reset pin.
			SPI2_CLK	I/O	MFP4	SPI2 serial clock pin.
			SD1_DAT2	I/O	MFP5	SD/SDIO1 data line bit 2.
			USCI0_DAT0	I/O	MFP6	USCI0 data 0 pin.
			I2C2_SDA	I/O	MFP7	I2C2 data input/output pin.

64 Pin	64 Pin 2 USB	128 Pin	Pin Name	Type	MFP	Description
			BPWM0_CH1	I/O	MFP9	BPWM0 channel 1 output/capture input.
			QEI1_INDEX	I	MFP10	Quadrature encoder 1 index input
			ECAP0_IC0	I	MFP11	Enhanced capture unit 0 input 0 pin.
			TM1_EXT	I/O	MFP13	Timer1 external capture input/toggle output pin.
			DAC0_ST	I	MFP14	DAC0 external trigger input.
10	10	15	PA.9	I/O	MFP0	General purpose digital I/O pin.
			OPA1_N	A	MFP1	Operational amplifier 1 negative input pin.
			EBI_MCLK	O	MFP2	EBI external clock output pin.
			SC2_DAT	I/O	MFP3	Smart Card 2 data pin.
			SPI2_MISO	I/O	MFP4	SPI2 MISO (Master In, Slave Out) pin.
			SD1_DAT1	I/O	MFP5	SD/SDIO1 data line bit 1.
			USCI0_DAT1	I/O	MFP6	USCI0 data 1 pin.
			UART1_TXD	O	MFP7	UART1 data transmitter output pin.
			BPWM0_CH2	I/O	MFP9	BPWM0 channel 2 output/capture input.
			QEI1_A	I	MFP10	Quadrature encoder 1 phase A input
			ECAP0_IC1	I	MFP11	Enhanced capture unit 0 input 1 pin.
			TM2_EXT	I/O	MFP13	Timer2 external capture input/toggle output pin.
11	11	16	PA.8	I/O	MFP0	General purpose digital I/O pin.
			OPA1_P	A	MFP1	Operational amplifier 1 positive input pin.
			EBI_ALE	O	MFP2	EBI address latch enable output pin.
			SC2_CLK	O	MFP3	Smart Card 2 clock pin.
			SPI2_MOSI	I/O	MFP4	SPI2 MOSI (Master Out, Slave In) pin.
			SD1_DAT0	I/O	MFP5	SD/SDIO1 data line bit 0.
			USCI0_CTL1	I/O	MFP6	USCI0 control 1 pin.
			UART1_RXD	I	MFP7	UART1 data receiver input pin.
			BPWM0_CH3	I/O	MFP9	BPWM0 channel 3 output/capture input.
			QEI1_B	I	MFP10	Quadrature encoder 1 phase B input
			ECAP0_IC2	I	MFP11	Enhanced capture unit 0 input 2 pin.
			TM3_EXT	I/O	MFP13	Timer3 external capture input/toggle output pin.
			INT4	I	MFP15	External interrupt 4 input pin.
		17	PC.13	I/O	MFP0	General purpose digital I/O pin.
			EBI_ADR10	O	MFP2	EBI address bus bit 10.
			SC2_nCD	I	MFP3	Smart Card 2 card detect pin.
			SPI2_I2SMCLK	I/O	MFP4	SPI2 I2S master clock output pin

64 Pin	64 Pin 2 USB	128 Pin	Pin Name	Type	MFP	Description
			USCI0_CTL0	I/O	MFP6	USCI0 control 0 pin.
			UART2_TXD	O	MFP7	UART2 data transmitter output pin.
			BPWM0_CH4	I/O	MFP9	BPWM0 channel 4 output/capture input.
			CLKO	O	MFP13	Clock Out
			EADC0_ST	I	MFP14	EADC0 external trigger input.
		18	PD.12	I/O	MFP0	General purpose digital I/O pin.
			OPA2_O	A	MFP1	Operational amplifier 2 output pin.
			EBI_nCS0	O	MFP2	EBI chip select 0 output pin.
			UART2_RXD	I	MFP7	UART2 data receiver input pin.
			BPWM0_CH5	I/O	MFP9	BPWM0 channel 5 output/capture input.
			QEI0_INDEX	I	MFP10	Quadrature encoder 0 index input
			CLKO	O	MFP13	Clock Out
			EADC0_ST	I	MFP14	EADC0 external trigger input.
			INT5	I	MFP15	External interrupt 5 input pin.
		19	PD.11	I/O	MFP0	General purpose digital I/O pin.
			OPA2_N	A	MFP1	Operational amplifier 2 negative input pin.
			EBI_nCS1	O	MFP2	EBI chip select 1 output pin.
			UART1_TXD	O	MFP3	UART1 data transmitter output pin.
			QEI0_A	I	MFP10	Quadrature encoder 0 phase A input
			INT6	I	MFP15	External interrupt 6 input pin.
		20	PD.10	I/O	MFP0	General purpose digital I/O pin.
			OPA2_P	A	MFP1	Operational amplifier 2 positive input pin.
			EBI_nCS2	O	MFP2	EBI chip select 2 output pin.
			UART1_RXD	I	MFP3	UART1 data receiver input pin.
			QEI0_B	I	MFP10	Quadrature encoder 0 phase B input
			INT7	I	MFP15	External interrupt 7 input pin.
		21	PG.2	I/O	MFP0	General purpose digital I/O pin.
			EBI_ADR11	O	MFP2	EBI address bus bit 11.
			SPI2_SS	I/O	MFP3	SPI2 slave select pin.
			I2C0_SMBAL	O	MFP4	I2C0 SMBus SMBALTER pin
			I2C1_SCL	I/O	MFP5	I2C1 clock pin.
			TM0	I/O	MFP13	Timer0 event counter input/toggle output pin.
		22	PG.3	I/O	MFP0	General purpose digital I/O pin.
			EBI_ADR12	O	MFP2	EBI address bus bit 12.

64 Pin	64 Pin 2 USB	128 Pin	Pin Name	Type	MFP	Description
			SPI2_CLK	I/O	MFP3	SPI2 serial clock pin.
			I2C0_SMBSUS	O	MFP4	I2C0 SMBus SMBSUS pin (PMBus CONTROL pin)
			I2C1_SDA	I/O	MFP5	I2C1 data input/output pin.
			TM1	I/O	MFP13	Timer1 event counter input/toggle output pin.
		23	PG.4	I/O	MFP0	General purpose digital I/O pin.
			EBI_ADR13	O	MFP2	EBI address bus bit 13.
			SPI2_MISO	I/O	MFP3	SPI2 MISO (Master In, Slave Out) pin.
			TM2	I/O	MFP13	Timer2 event counter input/toggle output pin.
		24	PF.11	I/O	MFP0	General purpose digital I/O pin.
			EBI_ADR14	O	MFP2	EBI address bus bit 14.
			SPI2_MOSI	I/O	MFP3	SPI2 MOSI (Master Out, Slave In) pin.
			TAMPER5	I/O	MFP10	TAMPER detector loop pin 5.
			TM3	I/O	MFP13	Timer3 event counter input/toggle output pin.
		25	PF.10	I/O	MFP0	General purpose digital I/O pin.
			EBI_ADR15	O	MFP2	EBI address bus bit 15.
			SC0_nCD	I	MFP3	Smart Card 0 card detect pin.
			I2S0_BCLK	O	MFP4	I2S0 bit clock output pin.
			SPI0_I2SMCLK	I/O	MFP5	SPI0 I2S master clock output pin
			TAMPER4	I/O	MFP10	TAMPER detector loop pin 4.
		26	PF.9	I/O	MFP0	General purpose digital I/O pin.
			EBI_ADR16	O	MFP2	EBI address bus bit 16.
			SC0_PWR	O	MFP3	Smart Card 0 power pin.
			I2S0_MCLK	O	MFP4	I2S0 master clock output pin.
			SPI0_SS	I/O	MFP5	SPI0 slave select pin.
			TAMPER3	I/O	MFP10	TAMPER detector loop pin 3.
		27	PF.8	I/O	MFP0	General purpose digital I/O pin.
			EBI_ADR17	O	MFP2	EBI address bus bit 17.
			SC0_RST	O	MFP3	Smart Card 0 reset pin.
			I2S0_DI	I	MFP4	I2S0 data input pin.
			SPI0_CLK	I/O	MFP5	SPI0 serial clock pin.
			TAMPER2	I/O	MFP10	TAMPER detector loop pin 2.
		28	PF.7	I/O	MFP0	General purpose digital I/O pin.
			EBI_ADR18	O	MFP2	EBI address bus bit 18.
			SC0_DAT	I/O	MFP3	Smart Card 0 data pin.

64 Pin	64 Pin 2 USB	128 Pin	Pin Name	Type	MFP	Description
			I2S0_DO	O	MFP4	I2S0 data output pin.
			SPI0_MISO	I/O	MFP5	SPI0 MISO (Master In, Slave Out) pin.
			UART4_TXD	O	MFP6	UART4 data transmitter output pin.
			TAMPER1	I/O	MFP10	TAMPER detector loop pin 1.
12	12	29	PF.6	I/O	MFP0	General purpose digital I/O pin.
			EBI_ADR19	O	MFP2	EBI address bus bit 19.
			SC0_CLK	O	MFP3	Smart Card 0 clock pin.
			I2S0_LRCK	O	MFP4	I2S0 left right channel clock output pin.
			SPI0_MOSI	I/O	MFP5	SPI0 MOSI (Master Out, Slave In) pin.
			UART4_RXD	I	MFP6	UART4 data receiver input pin.
			EBI_nCS0	O	MFP7	EBI chip select 0 output pin.
			TAMPER0	I/O	MFP10	TAMPER detector loop pin 0.
13	13	30	V_{DD}	P	MFP0	Power supply for I/O ports and LDO source for internal PLL and digital circuit.
14	14	31	PF.5	I/O	MFP0	General purpose digital I/O pin.
			UART2_RXD	I	MFP2	UART2 data receiver input pin.
			UART2_nCTS	I	MFP4	UART2 clear to Send input pin.
			BPWM0_CH4	I/O	MFP8	BPWM0 channel 4 output/capture input.
			EPWM0_SYNC_OUT	O	MFP9	EPWM0 counter synchronous trigger output pin.
			X32_IN	I	MFP10	External 32.768 kHz crystal input pin.
			EADC0_ST	I	MFP11	EADC0 external trigger input.
15	15	32	PF.4	I/O	MFP0	General purpose digital I/O pin.
			UART2_TXD	O	MFP2	UART2 data transmitter output pin.
			UART2_nRTS	O	MFP4	UART2 request to Send output pin.
			BPWM0_CH5	I/O	MFP8	BPWM0 channel 5 output/capture input.
			X32_OUT	O	MFP10	External 32.768 kHz crystal output pin.
		33	PH.4	I/O	MFP0	General purpose digital I/O pin.
			EBI_ADR3	O	MFP2	EBI address bus bit 3.
			SPI1_MISO	I/O	MFP3	SPI1 MISO (Master In, Slave Out) pin.
		34	PH.5	I/O	MFP0	General purpose digital I/O pin.
			EBI_ADR2	O	MFP2	EBI address bus bit 2.
			SPI1_MOSI	I/O	MFP3	SPI1 MOSI (Master Out, Slave In) pin.
		35	PH.6	I/O	MFP0	General purpose digital I/O pin.
			EBI_ADR1	O	MFP2	EBI address bus bit 1.

64 Pin	64 Pin 2 USB	128 Pin	Pin Name	Type	MFP	Description
			SPI1_CLK	I/O	MFP3	SPI1 serial clock pin.
		36	PH.7	I/O	MFP0	General purpose digital I/O pin.
			EBI_ADR0	O	MFP2	EBI address bus bit 0.
			SPI1_SS	I/O	MFP3	SPI1 slave select pin.
16	16	37	PF.3	I/O	MFP0	General purpose digital I/O pin.
			EBI_nCS0	O	MFP2	EBI chip select 0 output pin.
			UART0_TXD	O	MFP3	UART0 data transmitter output pin.
			I2C0_SCL	I/O	MFP4	I2C0 clock pin.
			XT1_IN	I	MFP10	External 4~24 MHz (high speed) crystal input pin.
			BPWM1_CH0	I/O	MFP11	BPWM1 channel 0 output/capture input.
17	17	38	PF.2	I/O	MFP0	General purpose digital I/O pin.
			EBI_nCS1	O	MFP2	EBI chip select 1 output pin.
			UART0_RXD	I	MFP3	UART0 data receiver input pin.
			I2C0_SDA	I/O	MFP4	I2C0 data input/output pin.
			QSPI0_CLK	I/O	MFP5	Quad SPI0 serial clock pin.
			XT1_OUT	O	MFP10	External 4~24 MHz (high speed) crystal output pin.
			BPWM1_CH1	I/O	MFP11	BPWM1 channel 1 output/capture input.
		39	V_{SS}	P	MFP0	Ground pin for digital circuit.
		40	V_{DD}	P	MFP0	Power supply for I/O ports and LDO source for internal PLL and digital circuit.
		41	PE.8	I/O	MFP0	General purpose digital I/O pin.
			EBI_ADR10	O	MFP2	EBI address bus bit 10.
			I2S0_BCLK	O	MFP4	I2S0 bit clock output pin.
			SPI2_CLK	I/O	MFP5	SPI2 serial clock pin.
			USCI1_CTL1	I/O	MFP6	USCI1 control 1 pin.
			UART2_TXD	O	MFP7	UART2 data transmitter output pin.
			EPWM0_CH0	I/O	MFP10	EPWM0 channel 0 output/capture input.
			EPWM0_BRAKE0	I	MFP11	EPWM0 Brake 0 input pin.
			ECAP0_IC0	I	MFP12	Enhanced capture unit 0 input 0 pin.
			TRACE_DATA3	O	MFP14	ETM Trace Data 3 output pin
		42	PE.9	I/O	MFP0	General purpose digital I/O pin.
			EBI_ADR11	O	MFP2	EBI address bus bit 11.
			I2S0_MCLK	O	MFP4	I2S0 master clock output pin.
			SPI2_MISO	I/O	MFP5	SPI2 MISO (Master In, Slave Out) pin.

64 Pin	64 Pin 2 USB	128 Pin	Pin Name	Type	MFP	Description
			USCI1_CTL0	I/O	MFP6	USCI1 control 0 pin.
			UART2_RXD	I	MFP7	UART2 data receiver input pin.
			EPWM0_CH1	I/O	MFP10	EPWM0 channel 1 output/capture input.
			EPWM0_BRAKE1	I	MFP11	EPWM0 Brake 1 input pin.
			ECAP0_IC1	I	MFP12	Enhanced capture unit 0 input 1 pin.
			TRACE_DATA2	O	MFP14	ETM Trace Data 2 output pin
		43	PE.10	I/O	MFP0	General purpose digital I/O pin.
			EBI_ADR12	O	MFP2	EBI address bus bit 12.
			I2S0_DI	I	MFP4	I2S0 data input pin.
			SPI2_MOSI	I/O	MFP5	SPI2 MOSI (Master Out, Slave In) pin.
			USCI1_DAT0	I/O	MFP6	USCI1 data 0 pin.
			UART3_TXD	O	MFP7	UART3 data transmitter output pin.
			EPWM0_CH2	I/O	MFP10	EPWM0 channel 2 output/capture input.
			EPWM1_BRAKE0	I	MFP11	EPWM1 Brake 0 input pin.
			ECAP0_IC2	I	MFP12	Enhanced capture unit 0 input 2 pin.
			TRACE_DATA1	O	MFP14	ETM Trace Data 1 output pin
		44	PE.11	I/O	MFP0	General purpose digital I/O pin.
			EBI_ADR13	O	MFP2	EBI address bus bit 13.
			I2S0_DO	O	MFP4	I2S0 data output pin.
			SPI2_SS	I/O	MFP5	SPI2 slave select pin.
			USCI1_DAT1	I/O	MFP6	USCI1 data 1 pin.
			UART3_RXD	I	MFP7	UART3 data receiver input pin.
			UART1_nCTS	I	MFP8	UART1 clear to Send input pin.
			EPWM0_CH3	I/O	MFP10	EPWM0 channel 3 output/capture input.
			EPWM1_BRAKE1	I	MFP11	EPWM1 Brake 1 input pin.
			ECAP1_IC2	I	MFP13	Enhanced capture unit 1 input 2 pin.
			TRACE_DATA0	O	MFP14	ETM Trace Data 0 output pin
		45	PE.12	I/O	MFP0	General purpose digital I/O pin.
			EBI_ADR14	O	MFP2	EBI address bus bit 14.
			I2S0_LRCK	O	MFP4	I2S0 left right channel clock output pin.
			SPI2_I2SMCLK	I/O	MFP5	SPI2 I2S master clock output pin
			USCI1_CLK	I/O	MFP6	USCI1 clock pin.
			UART1_nRTS	O	MFP8	UART1 request to Send output pin.
			EPWM0_CH4	I/O	MFP10	EPWM0 channel 4 output/capture input.

64 Pin	64 Pin 2 USB	128 Pin	Pin Name	Type	MFP	Description
			ECAP1_IC1	I	MFP13	Enhanced capture unit 1 input 1 pin.
			TRACE_CLK	O	MFP14	ETM Trace Clock output pin
		46	PE.13	I/O	MFP0	General purpose digital I/O pin.
			EBI_ADR15	O	MFP2	EBI address bus bit 15.
			I2C0_SCL	I/O	MFP4	I2C0 clock pin.
			UART4_nRTS	O	MFP5	UART4 request to Send output pin.
			UART1_TXD	O	MFP8	UART1 data transmitter output pin.
			EPWM0_CH5	I/O	MFP10	EPWM0 channel 5 output/capture input.
			EPWM1_CH0	I/O	MFP11	EPWM1 channel 0 output/capture input.
			BPWM1_CH5	I/O	MFP12	BPWM1 channel 5 output/capture input.
			ECAP1_IC0	I	MFP13	Enhanced capture unit 1 input 0 pin.
		47	PC.8	I/O	MFP0	General purpose digital I/O pin.
			EBI_ADR16	O	MFP2	EBI address bus bit 16.
			I2C0_SDA	I/O	MFP4	I2C0 data input/output pin.
			UART4_nCTS	I	MFP5	UART4 clear to Send input pin.
			UART1_RXD	I	MFP8	UART1 data receiver input pin.
			EPWM1_CH1	I/O	MFP11	EPWM1 channel 1 output/capture input.
			BPWM1_CH4	I/O	MFP12	BPWM1 channel 4 output/capture input.
18	18	48	PC.7	I/O	MFP0	General purpose digital I/O pin.
			EBI_AD9	I/O	MFP2	EBI address/data bus bit 9.
			SPI1_MISO	I/O	MFP4	SPI1 MISO (Master In, Slave Out) pin.
			UART4_TXD	O	MFP5	UART4 data transmitter output pin.
			SC2_PWR	O	MFP6	Smart Card 2 power pin.
			UART0_nCTS	I	MFP7	UART0 clear to Send input pin.
			I2C1_SMBAL	O	MFP8	I2C1 SMBus SMBALTER pin
			EPWM1_CH2	I/O	MFP11	EPWM1 channel 2 output/capture input.
			BPWM1_CH0	I/O	MFP12	BPWM1 channel 0 output/capture input.
			TM0	I/O	MFP14	Timer0 event counter input/toggle output pin.
			INT3	I	MFP15	External interrupt 3 input pin.
19	19	49	PC.6	I/O	MFP0	General purpose digital I/O pin.
			EBI_AD8	I/O	MFP2	EBI address/data bus bit 8.
			SPI1_MOSI	I/O	MFP4	SPI1 MOSI (Master Out, Slave In) pin.
			UART4_RXD	I	MFP5	UART4 data receiver input pin.
			SC2_RST	O	MFP6	Smart Card 2 reset pin.

64 Pin	64 Pin 2 USB	128 Pin	Pin Name	Type	MFP	Description
			UART0_nRTS	O	MFP7	UART0 request to Send output pin.
			I2C1_SMBSUS	O	MFP8	I2C1 SMBus SMBSUS pin (PMBus CONTROL pin)
			EPWM1_CH3	I/O	MFP11	EPWM1 channel 3 output/capture input.
			BPWM1_CH1	I/O	MFP12	BPWM1 channel 1 output/capture input.
			TM1	I/O	MFP14	Timer1 event counter input/toggle output pin.
			INT2	I	MFP15	External interrupt 2 input pin.
20	20	50	PA.7	I/O	MFP0	General purpose digital I/O pin.
			EBI_AD7	I/O	MFP2	EBI address/data bus bit 7.
			SPI1_CLK	I/O	MFP4	SPI1 serial clock pin.
			SC2_DAT	I/O	MFP6	Smart Card 2 data pin.
			UART0_TXD	O	MFP7	UART0 data transmitter output pin.
			I2C1_SCL	I/O	MFP8	I2C1 clock pin.
			EPWM1_CH4	I/O	MFP11	EPWM1 channel 4 output/capture input.
			BPWM1_CH2	I/O	MFP12	BPWM1 channel 2 output/capture input.
			ACMP0_WLAT	I	MFP13	Analog comparator 0 window latch input pin
			TM2	I/O	MFP14	Timer2 event counter input/toggle output pin.
			INT1	I	MFP15	External interrupt 1 input pin.
21	21	51	PA.6	I/O	MFP0	General purpose digital I/O pin.
			EBI_AD6	I/O	MFP2	EBI address/data bus bit 6.
			SPI1_SS	I/O	MFP4	SPI1 slave select pin.
			SD1_nCD	I	MFP5	SD/SDIO1 card detect input pin
			SC2_CLK	O	MFP6	Smart Card 2 clock pin.
			UART0_RXD	I	MFP7	UART0 data receiver input pin.
			I2C1_SDA	I/O	MFP8	I2C1 data input/output pin.
			EPWM1_CH5	I/O	MFP11	EPWM1 channel 5 output/capture input.
			BPWM1_CH3	I/O	MFP12	BPWM1 channel 3 output/capture input.
			ACMP1_WLAT	I	MFP13	Analog comparator 1 window latch input pin
			TM3	I/O	MFP14	Timer3 event counter input/toggle output pin.
			INT0	I	MFP15	External interrupt 0 input pin.
22	22	52	V_{SS}	P	MFP0	Ground pin for digital circuit.
23	23	53	V_{DD}	P	MFP0	Power supply for I/O ports and LDO source for internal PLL and digital circuit.
24	24	54	LDO_CAP	A	MFP0	LDO output pin. **Note:** This pin needs to be connected with an external capacitor.

64 Pin	64 Pin 2 USB	128 Pin	Pin Name	Type	MFP	Description
25	25	55	PA.5	I/O	MFP0	General purpose digital I/O pin.
			SPIM_D2	I/O	MFP2	SPIM data 2 pin for Quad Mode I/O.
			QSPI0_MISO1	I/O	MFP3	Quad SPI0 MISO1 (Master In, Slave Out) pin.
			SPI1_I2SMCLK	I/O	MFP4	SPI1 I2S master clock output pin
			SD1_CMD	I/O	MFP5	SD/SDIO1 command/response pin
			SC2_nCD	I	MFP6	Smart Card 2 card detect pin.
			UART0_nCTS	I	MFP7	UART0 clear to Send input pin.
			UART5_TXD	O	MFP8	UART5 data transmitter output pin.
			I2C0_SCL	I/O	MFP9	I2C0 clock pin.
			BPWM0_CH5	I/O	MFP12	BPWM0 channel 5 output/capture input.
			EPWM0_CH0	I/O	MFP13	EPWM0 channel 0 output/capture input.
			QEI0_INDEX	I	MFP14	Quadrature encoder 0 index input
26	26	56	PA.4	I/O	MFP0	General purpose digital I/O pin.
			SPIM_D3	I/O	MFP2	SPIM data 3 pin for Quad Mode I/O.
			QSPI0_MOSI1	I/O	MFP3	Quad SPI0 MOSI1 (Master Out, Slave In) pin.
			SPI0_I2SMCLK	I/O	MFP4	SPI0 I2S master clock output pin
			SD1_CLK	O	MFP5	SD/SDIO1 clock output pin
			SC0_nCD	I	MFP6	Smart Card 0 card detect pin.
			UART0_nRTS	O	MFP7	UART0 request to Send output pin.
			UART5_RXD	I	MFP8	UART5 data receiver input pin.
			I2C0_SDA	I/O	MFP9	I2C0 data input/output pin.
			BPWM0_CH4	I/O	MFP12	BPWM0 channel 4 output/capture input.
			EPWM0_CH1	I/O	MFP13	EPWM0 channel 1 output/capture input.
			QEI0_A	I	MFP14	Quadrature encoder 0 phase A input
27	27	57	PA.3	I/O	MFP0	General purpose digital I/O pin.
			SPIM_SS	I/O	MFP2	SPIM slave select pin.
			QSPI0_SS	I/O	MFP3	Quad SPI0 slave select pin.
			SPI0_SS	I/O	MFP4	SPI0 slave select pin.
			SD1_DAT3	I/O	MFP5	SD/SDIO1 data line bit 3.
			SC0_PWR	O	MFP6	Smart Card 0 power pin.
			UART4_TXD	O	MFP7	UART4 data transmitter output pin.
			UART1_TXD	O	MFP8	UART1 data transmitter output pin.
			I2C1_SCL	I/O	MFP9	I2C1 clock pin.
			BPWM0_CH3	I/O	MFP12	BPWM0 channel 3 output/capture input.

64 Pin	64 Pin 2 USB	128 Pin	Pin Name	Type	MFP	Description
			EPWM0_CH2	I/O	MFP13	EPWM0 channel 2 output/capture input.
			QEI0_B	I	MFP14	Quadrature encoder 0 phase B input
28	28	58	PA.2	I/O	MFP0	General purpose digital I/O pin.
			SPIM_CLK	I/O	MFP2	SPIM serial clock pin.
			QSPI0_CLK	I/O	MFP3	Quad SPI0 serial clock pin.
			SPI0_CLK	I/O	MFP4	SPI0 serial clock pin.
			SD1_DAT2	I/O	MFP5	SD/SDIO1 data line bit 2.
			SC0_RST	O	MFP6	Smart Card 0 reset pin.
			UART4_RXD	I	MFP7	UART4 data receiver input pin.
			UART1_RXD	I	MFP8	UART1 data receiver input pin.
			I2C1_SDA	I/O	MFP9	I2C1 data input/output pin.
			BPWM0_CH2	I/O	MFP12	BPWM0 channel 2 output/capture input.
			EPWM0_CH3	I/O	MFP13	EPWM0 channel 3 output/capture input.
29	29	59	PA.1	I/O	MFP0	General purpose digital I/O pin.
			SPIM_MISO	I/O	MFP2	SPIM MISO (Master In, Slave Out) pin.
			QSPI0_MISO0	I/O	MFP3	Quad SPI0 MISO0 (Master In, Slave Out) pin.
			SPI0_MISO	I/O	MFP4	SPI0 MISO (Master In, Slave Out) pin.
			SD1_DAT1	I/O	MFP5	SD/SDIO1 data line bit 1.
			SC0_DAT	I/O	MFP6	Smart Card 0 data pin.
			UART0_TXD	O	MFP7	UART0 data transmitter output pin.
			UART1_nCTS	I	MFP8	UART1 clear to Send input pin.
			I2C2_SCL	I/O	MFP9	I2C2 clock pin.
			BPWM0_CH1	I/O	MFP12	BPWM0 channel 1 output/capture input.
			EPWM0_CH4	I/O	MFP13	EPWM0 channel 4 output/capture input.
			DAC1_ST	I	MFP15	DAC1 external trigger input.
30	30	60	PA.0	I/O	MFP0	General purpose digital I/O pin.
			SPIM_MOSI	I/O	MFP2	SPIM MOSI (Master Out, Slave In) pin.
			QSPI0_MOSI0	I/O	MFP3	Quad SPI0 MOSI0 (Master Out, Slave In) pin.
			SPI0_MOSI	I/O	MFP4	SPI0 MOSI (Master Out, Slave In) pin.
			SD1_DAT0	I/O	MFP5	SD/SDIO1 data line bit 0.
			SC0_CLK	O	MFP6	Smart Card 0 clock pin.
			UART0_RXD	I	MFP7	UART0 data receiver input pin.
			UART1_nRTS	O	MFP8	UART1 request to Send output pin.
			I2C2_SDA	I/O	MFP9	I2C2 data input/output pin.

64 Pin	64 Pin 2 USB	128 Pin	Pin Name	Type	MFP	Description
			BPWM0_CH0	I/O	MFP12	BPWM0 channel 0 output/capture input.
			EPWM0_CH5	I/O	MFP13	EPWM0 channel 5 output/capture input.
			DAC0_ST	I	MFP15	DAC0 external trigger input.
31	31	61	V_{DDIO}	P	MFP0	Power supply for PA.0~PA.5.
		62	PE.14	I/O	MFP0	General purpose digital I/O pin.
			EBI_AD8	I/O	MFP2	EBI address/data bus bit 8.
			UART2_TXD	O	MFP3	UART2 data transmitter output pin.
			SD1_nCD	I	MFP5	SD/SDIO1 card detect input pin
		63	PE.15	I/O	MFP0	General purpose digital I/O pin.
			EBI_AD9	I/O	MFP2	EBI address/data bus bit 9.
			UART2_RXD	I	MFP3	UART2 data receiver input pin.
32	32	64	nRESET	I	MFP0	External reset input: active LOW, with an internal pull-up. Set this pin low reset to initial state. **Note:** It is recommended to use 10 kΩ pull-up resistor and 10 uF capacitor on nRESET pin.
33	33	65	PF.0	I/O	MFP0	General purpose digital I/O pin.
			UART1_TXD	O	MFP2	UART1 data transmitter output pin.
			I2C1_SCL	I/O	MFP3	I2C1 clock pin.
			BPWM1_CH0	I/O	MFP12	BPWM1 channel 0 output/capture input.
			ICE_DAT	O	MFP14	Serial wired debugger data pin. **Note:** It is recommended to use 100 kΩ pull-up resistor on ICE_DAT pin.
34	34	66	PF.1	I/O	MFP0	General purpose digital I/O pin.
			UART1_RXD	I	MFP2	UART1 data receiver input pin.
			I2C1_SDA	I/O	MFP3	I2C1 data input/output pin.
			BPWM1_CH1	I/O	MFP12	BPWM1 channel 1 output/capture input.
			ICE_CLK	I	MFP14	Serial wired debugger clock pin. **Note:** It is recommended to use 100 kΩ pull-up resistor on ICE_CLK pin.
		67	PD.9	I/O	MFP0	General purpose digital I/O pin.
			EBI_AD7	I/O	MFP2	EBI address/data bus bit 7.
			I2C2_SCL	I/O	MFP3	I2C2 clock pin.
			UART2_nCTS	I	MFP4	UART2 clear to Send input pin.
		68	PD.8	I/O	MFP0	General purpose digital I/O pin.
			EBI_AD6	I/O	MFP2	EBI address/data bus bit 6.
			I2C2_SDA	I/O	MFP3	I2C2 data input/output pin.
			UART2_nRTS	O	MFP4	UART2 request to Send output pin.

64 Pin	64 Pin 2 USB	128 Pin	Pin Name	Type	MFP	Description
35		69	PC.5	I/O	MFP0	General purpose digital I/O pin.
			EBI_AD5	I/O	MFP2	EBI address/data bus bit 5.
			SPIM_D2	I/O	MFP3	SPIM data 2 pin for Quad Mode I/O.
			QSPI0_MISO1	I/O	MFP4	Quad SPI0 MISO1 (Master In, Slave Out) pin.
			UART2_TXD	O	MFP8	UART2 data transmitter output pin.
			I2C1_SCL	I/O	MFP9	I2C1 clock pin.
			UART4_TXD	O	MFP11	UART4 data transmitter output pin.
			EPWM1_CH0	I/O	MFP12	EPWM1 channel 0 output/capture input.
36		70	PC.4	I/O	MFP0	General purpose digital I/O pin.
			EBI_AD4	I/O	MFP2	EBI address/data bus bit 4.
			SPIM_D3	I/O	MFP3	SPIM data 3 pin for Quad Mode I/O.
			QSPI0_MOSI1	I/O	MFP4	Quad SPI0 MOSI1 (Master Out, Slave In) pin.
			SC1_nCD	I	MFP5	Smart Card 1 card detect pin.
			I2S0_BCLK	O	MFP6	I2S0 bit clock output pin.
			SPI1_I2SMCLK	I/O	MFP7	SPI1 I2S master clock output pin
			UART2_RXD	I	MFP8	UART2 data receiver input pin.
			I2C1_SDA	I/O	MFP9	I2C1 data input/output pin.
			UART4_RXD	I	MFP11	UART4 data receiver input pin.
			EPWM1_CH1	I/O	MFP12	EPWM1 channel 1 output/capture input.
37		71	PC.3	I/O	MFP0	General purpose digital I/O pin.
			EBI_AD3	I/O	MFP2	EBI address/data bus bit 3.
			SPIM_SS	I/O	MFP3	SPIM slave select pin.
			QSPI0_SS	I/O	MFP4	Quad SPI0 slave select pin.
			SC1_PWR	O	MFP5	Smart Card 1 power pin.
			I2S0_MCLK	O	MFP6	I2S0 master clock output pin.
			SPI1_MISO	I/O	MFP7	SPI1 MISO (Master In, Slave Out) pin.
			UART2_nRTS	O	MFP8	UART2 request to Send output pin.
			I2C0_SMBAL	O	MFP9	I2C0 SMBus SMBALTER pin
			UART3_TXD	O	MFP11	UART3 data transmitter output pin.
			EPWM1_CH2	I/O	MFP12	EPWM1 channel 2 output/capture input.
38		72	PC.2	I/O	MFP0	General purpose digital I/O pin.
			EBI_AD2	I/O	MFP2	EBI address/data bus bit 2.
			SPIM_CLK	I/O	MFP3	SPIM serial clock pin.
			QSPI0_CLK	I/O	MFP4	Quad SPI0 serial clock pin.

64 Pin	64 Pin 2 USB	128 Pin	Pin Name	Type	MFP	Description
			SC1_RST	O	MFP5	Smart Card 1 reset pin.
			I2S0_DI	I	MFP6	I2S0 data input pin.
			SPI1_MOSI	I/O	MFP7	SPI1 MOSI (Master Out, Slave In) pin.
			UART2_nCTS	I	MFP8	UART2 clear to Send input pin.
			I2C0_SMBSUS	O	MFP9	I2C0 SMBus SMBSUS pin (PMBus CONTROL pin)
			UART3_RXD	I	MFP11	UART3 data receiver input pin.
			EPWM1_CH3	I/O	MFP12	EPWM1 channel 3 output/capture input.
39	35	73	PC.1	I/O	MFP0	General purpose digital I/O pin.
			EBI_AD1	I/O	MFP2	EBI address/data bus bit 1.
			SPIM_MISO	I/O	MFP3	SPIM MISO (Master In, Slave Out) pin.
			QSPI0_MISO0	I/O	MFP4	Quad SPI0 MISO0 (Master In, Slave Out) pin.
			SC1_DAT	I/O	MFP5	Smart Card 1 data pin.
			I2S0_DO	O	MFP6	I2S0 data output pin.
			SPI1_CLK	I/O	MFP7	SPI1 serial clock pin.
			UART2_TXD	O	MFP8	UART2 data transmitter output pin.
			I2C0_SCL	I/O	MFP9	I2C0 clock pin.
			EPWM1_CH4	I/O	MFP12	EPWM1 channel 4 output/capture input.
			ACMP0_O	O	MFP14	Analog comparator 0 output pin.
40	36	74	PC.0	I/O	MFP0	General purpose digital I/O pin.
			EBI_AD0	I/O	MFP2	EBI address/data bus bit 0.
			SPIM_MOSI	I/O	MFP3	SPIM MOSI (Master Out, Slave In) pin.
			QSPI0_MOSI0	I/O	MFP4	Quad SPI0 MOSI0 (Master Out, Slave In) pin.
			SC1_CLK	O	MFP5	Smart Card 1 clock pin.
			I2S0_LRCK	O	MFP6	I2S0 left right channel clock output pin.
			SPI1_SS	I/O	MFP7	SPI1 slave select pin.
			UART2_RXD	I	MFP8	UART2 data receiver input pin.
			I2C0_SDA	I/O	MFP9	I2C0 data input/output pin.
			EPWM1_CH5	I/O	MFP12	EPWM1 channel 5 output/capture input.
			ACMP1_O	O	MFP14	Analog comparator 1 output pin.
		75	V_{SS}	P	MFP0	Ground pin for digital circuit.
		76	V_{DD}	P	MFP0	Power supply for I/O ports and LDO source for internal PLL and digital circuit.
		77	PG.9	I/O	MFP0	General purpose digital I/O pin.
			EBI_AD0	I/O	MFP2	EBI address/data bus bit 0.

64 Pin	64 Pin 2 USB	128 Pin	Pin Name	Type	MFP	Description
			SD1_DAT3	I/O	MFP3	SD/SDIO1 data line bit 3.
			SPIM_D2	I/O	MFP4	SPIM data 2 pin for Quad Mode I/O.
			BPWM0_CH5	I/O	MFP12	BPWM0 channel 5 output/capture input.
		78	PG.10	I/O	MFP0	General purpose digital I/O pin.
			EBI_AD1	I/O	MFP2	EBI address/data bus bit 1.
			SD1_DAT2	I/O	MFP3	SD/SDIO1 data line bit 2.
			SPIM_D3	I/O	MFP4	SPIM data 3 pin for Quad Mode I/O.
			BPWM0_CH4	I/O	MFP12	BPWM0 channel 4 output/capture input.
		79	PG.11	I/O	MFP0	General purpose digital I/O pin.
			EBI_AD2	I/O	MFP2	EBI address/data bus bit 2.
			SD1_DAT1	I/O	MFP3	SD/SDIO1 data line bit 1.
			SPIM_SS	I/O	MFP4	SPIM slave select pin.
			BPWM0_CH3	I/O	MFP12	BPWM0 channel 3 output/capture input.
		80	PG.12	I/O	MFP0	General purpose digital I/O pin.
			EBI_AD3	I/O	MFP2	EBI address/data bus bit 3.
			SD1_DAT0	I/O	MFP3	SD/SDIO1 data line bit 0.
			SPIM_CLK	I/O	MFP4	SPIM serial clock pin.
			BPWM0_CH2	I/O	MFP12	BPWM0 channel 2 output/capture input.
		81	PG.13	I/O	MFP0	General purpose digital I/O pin.
			EBI_AD4	I/O	MFP2	EBI address/data bus bit 4.
			SD1_CMD	I/O	MFP3	SD/SDIO1 command/response pin
			SPIM_MISO	I/O	MFP4	SPIM MISO (Master In, Slave Out) pin.
			BPWM0_CH1	I/O	MFP12	BPWM0 channel 1 output/capture input.
		82	PG.14	I/O	MFP0	General purpose digital I/O pin.
			EBI_AD5	I/O	MFP2	EBI address/data bus bit 5.
			SD1_CLK	O	MFP3	SD/SDIO1 clock output pin
			SPIM_MOSI	I/O	MFP4	SPIM MOSI (Master Out, Slave In) pin.
			BPWM0_CH0	I/O	MFP12	BPWM0 channel 0 output/capture input.
		83	PG.15	I/O	MFP0	General purpose digital I/O pin.
			SD1_nCD	I	MFP3	SD/SDIO1 card detect input pin
			CLKO	O	MFP14	Clock Out
			EADC0_ST	I	MFP15	EADC0 external trigger input.
		84	PD.13	I/O	MFP0	General purpose digital I/O pin.
			EBI_AD10	I/O	MFP2	EBI address/data bus bit 10.

64 Pin	64 Pin 2 USB	128 Pin	Pin Name	Type	MFP	Description
			SD0_nCD	I	MFP3	SD/SDIO0 card detect input pin
			SPI0_I2SMCLK	I/O	MFP4	SPI0 I2S master clock output pin
			SPI1_I2SMCLK	I/O	MFP5	SPI1 I2S master clock output pin
			SC2_nCD	I	MFP7	Smart Card 2 card detect pin.
	37	85	PA.12	I/O	MFP0	General purpose digital I/O pin.
			I2S0_BCLK	O	MFP2	I2S0 bit clock output pin.
			UART4_TXD	O	MFP3	UART4 data transmitter output pin.
			I2C1_SCL	I/O	MFP4	I2C1 clock pin.
			SPI2_SS	I/O	MFP5	SPI2 slave select pin.
			SC2_PWR	O	MFP7	Smart Card 2 power pin.
			BPWM1_CH2	I/O	MFP11	BPWM1 channel 2 output/capture input.
			QEI1_INDEX	I	MFP12	Quadrature encoder 1 index input
			USB_VBUS	P	MFP14	Power supply from USB host or HUB.
	38	86	PA.13	I/O	MFP0	General purpose digital I/O pin.
			I2S0_MCLK	O	MFP2	I2S0 master clock output pin.
			UART4_RXD	I	MFP3	UART4 data receiver input pin.
			I2C1_SDA	I/O	MFP4	I2C1 data input/output pin.
			SPI2_CLK	I/O	MFP5	SPI2 serial clock pin.
			SC2_RST	O	MFP7	Smart Card 2 reset pin.
			BPWM1_CH3	I/O	MFP11	BPWM1 channel 3 output/capture input.
			QEI1_A	I	MFP12	Quadrature encoder 1 phase A input
			USB_D-	A	MFP14	USB differential signal D-.
	39	87	PA.14	I/O	MFP0	General purpose digital I/O pin.
			I2S0_DI	I	MFP2	I2S0 data input pin.
			UART0_TXD	O	MFP3	UART0 data transmitter output pin.
			SPI2_MISO	I/O	MFP5	SPI2 MISO (Master In, Slave Out) pin.
			I2C2_SCL	I/O	MFP6	I2C2 clock pin.
			SC2_DAT	I/O	MFP7	Smart Card 2 data pin.
			BPWM1_CH4	I/O	MFP11	BPWM1 channel 4 output/capture input.
			QEI1_B	I	MFP12	Quadrature encoder 1 phase B input
			USB_D+	A	MFP14	USB differential signal D+.
	40	88	PA.15	I/O	MFP0	General purpose digital I/O pin.
			I2S0_DO	O	MFP2	I2S0 data output pin.
			UART0_RXD	I	MFP3	UART0 data receiver input pin.

64 Pin	64 Pin 2 USB	128 Pin	Pin Name	Type	MFP	Description
			SPI2_MOSI	I/O	MFP5	SPI2 MOSI (Master Out, Slave In) pin.
			I2C2_SDA	I/O	MFP6	I2C2 data input/output pin.
			SC2_CLK	O	MFP7	Smart Card 2 clock pin.
			BPWM1_CH5	I/O	MFP11	BPWM1 channel 5 output/capture input.
			EPWM0_SYNC_IN	I	MFP12	EPWM0 counter synchronous trigger input pin.
			USB_OTG_ID	I	MFP14	USB_ identification.
41	41	89	HSUSB_VRES	A	MFP0	HSUSB module reference resister
42	42	90	HSUSB_VDD33	P	MFP0	Power supply for HSUSB VDD33
43	43	91	HSUSB_VBUS	P	MFP0	HSUSB Power supply from USB host or HUB.
44	44	92	HSUSB_D-	A	MFP0	HSUSB differential signal D-.
45	45	93	HSUSB_VSS	P	MFP0	Ground pin for HSUSB.
46	46	94	HSUSB_D+	A	MFP0	HSUSB differential signal D+.
47	47	95	HSUSB_VDD12_CAP	A	MFP0	HSUSB Internal power regulator output 1.2V decoupling pin. Note: This pin needs to be connected with a 1uF capacitor.
48	48	96	HSUSB_ID	I	MFP0	HSUSB identification.
		97	PE.7	I/O	MFP0	General purpose digital I/O pin.
			SD0_CMD	I/O	MFP3	SD/SDIO0 command/response pin
			SPIM_D2	I/O	MFP4	SPIM data 2 pin for Quad Mode I/O.
			UART5_TXD	O	MFP8	UART5 data transmitter output pin.
			QEI1_INDEX	I	MFP11	Quadrature encoder 1 index input
			EPWM0_CH0	I/O	MFP12	EPWM0 channel 0 output/capture input.
			BPWM0_CH5	I/O	MFP13	BPWM0 channel 5 output/capture input.
		98	PE.6	I/O	MFP0	General purpose digital I/O pin.
			SD0_CLK	O	MFP3	SD/SDIO0 clock output pin
			SPIM_D3	I/O	MFP4	SPIM data 3 pin for Quad Mode I/O.
			SPI3_I2SMCLK	I/O	MFP5	SPI3 I2S master clock output pin
			SC0_nCD	I	MFP6	Smart Card 0 card detect pin.
			USCI0_CTL0	I/O	MFP7	USCI0 control 0 pin.
			UART5_RXD	I	MFP8	UART5 data receiver input pin.
			QEI1_A	I	MFP11	Quadrature encoder 1 phase A input
			EPWM0_CH1	I/O	MFP12	EPWM0 channel 1 output/capture input.
			BPWM0_CH4	I/O	MFP13	BPWM0 channel 4 output/capture input.
		99	PE.5	I/O	MFP0	General purpose digital I/O pin.
			EBI_nRD	O	MFP2	EBI read enable output pin.

64 Pin	64 Pin 2 USB	128 Pin	Pin Name	Type	MFP	Description
			SD0_DAT3	I/O	MFP3	SD/SDIO0 data line bit 3.
			SPIM_SS	I/O	MFP4	SPIM slave select pin.
			SPI3_SS	I/O	MFP5	SPI3 slave select pin.
			SC0_PWR	O	MFP6	Smart Card 0 power pin.
			USCI0_CTL1	I/O	MFP7	USCI0 control 1 pin.
			QEI1_B	I	MFP11	Quadrature encoder 1 phase B input
			EPWM0_CH2	I/O	MFP12	EPWM0 channel 2 output/capture input.
			BPWM0_CH3	I/O	MFP13	BPWM0 channel 3 output/capture input.
		100	PE.4	I/O	MFP0	General purpose digital I/O pin.
			EBI_nWR	O	MFP2	EBI write enable output pin.
			SD0_DAT2	I/O	MFP3	SD/SDIO0 data line bit 2.
			SPIM_CLK	I/O	MFP4	SPIM serial clock pin.
			SPI3_CLK	I/O	MFP5	SPI3 serial clock pin.
			SC0_RST	O	MFP6	Smart Card 0 reset pin.
			USCI0_DAT1	I/O	MFP7	USCI0 data 1 pin.
			QEI0_INDEX	I	MFP11	Quadrature encoder 0 index input
			EPWM0_CH3	I/O	MFP12	EPWM0 channel 3 output/capture input.
			BPWM0_CH2	I/O	MFP13	BPWM0 channel 2 output/capture input.
		101	PE.3	I/O	MFP0	General purpose digital I/O pin.
			EBI_MCLK	O	MFP2	EBI external clock output pin.
			SD0_DAT1	I/O	MFP3	SD/SDIO0 data line bit 1.
			SPIM_MISO	I/O	MFP4	SPIM MISO (Master In, Slave Out) pin.
			SPI3_MISO	I/O	MFP5	SPI3 MISO (Master In, Slave Out) pin.
			SC0_DAT	I/O	MFP6	Smart Card 0 data pin.
			USCI0_DAT0	I/O	MFP7	USCI0 data 0 pin.
			QEI0_A	I	MFP11	Quadrature encoder 0 phase A input
			EPWM0_CH4	I/O	MFP12	EPWM0 channel 4 output/capture input.
			BPWM0_CH1	I/O	MFP13	BPWM0 channel 1 output/capture input.
		102	PE.2	I/O	MFP0	General purpose digital I/O pin.
			EBI_ALE	O	MFP2	EBI address latch enable output pin.
			SD0_DAT0	I/O	MFP3	SD/SDIO0 data line bit 0.
			SPIM_MOSI	I/O	MFP4	SPIM MOSI (Master Out, Slave In) pin.
			SPI3_MOSI	I/O	MFP5	SPI3 MOSI (Master Out, Slave In) pin.
			SC0_CLK	O	MFP6	Smart Card 0 clock pin.

64 Pin	64 Pin 2 USB	128 Pin	Pin Name	Type	MFP	Description
			USCI0_CLK	I/O	MFP7	USCI0 clock pin.
			QEI0_B	I	MFP11	Quadrature encoder 0 phase B input
			EPWM0_CH5	I/O	MFP12	EPWM0 channel 5 output/capture input.
			BPWM0_CH0	I/O	MFP13	BPWM0 channel 0 output/capture input.
		103	V_{SS}	P	MFP0	Ground pin for digital circuit.
		104	V_{DD}	P	MFP0	Power supply for I/O ports and LDO source for internal PLL and digital circuit.
		105	PE.1	I/O	MFP0	General purpose digital I/O pin.
			EBI_AD10	I/O	MFP2	EBI address/data bus bit 10.
			QSPI0_MISO0	I/O	MFP3	Quad SPI0 MISO0 (Master In, Slave Out) pin.
			SC2_DAT	I/O	MFP4	Smart Card 2 data pin.
			I2S0_BCLK	O	MFP5	I2S0 bit clock output pin.
			SPI1_MISO	I/O	MFP6	SPI1 MISO (Master In, Slave Out) pin.
			UART3_TXD	O	MFP7	UART3 data transmitter output pin.
			I2C1_SCL	I/O	MFP8	I2C1 clock pin.
			UART4_nCTS	I	MFP9	UART4 clear to Send input pin.
		106	PE.0	I/O	MFP0	General purpose digital I/O pin.
			EBI_AD11	I/O	MFP2	EBI address/data bus bit 11.
			QSPI0_MOSI0	I/O	MFP3	Quad SPI0 MOSI0 (Master Out, Slave In) pin.
			SC2_CLK	O	MFP4	Smart Card 2 clock pin.
			I2S0_MCLK	O	MFP5	I2S0 master clock output pin.
			SPI1_MOSI	I/O	MFP6	SPI1 MOSI (Master Out, Slave In) pin.
			UART3_RXD	I	MFP7	UART3 data receiver input pin.
			I2C1_SDA	I/O	MFP8	I2C1 data input/output pin.
			UART4_nRTS	O	MFP9	UART4 request to Send output pin.
		107	PH.8	I/O	MFP0	General purpose digital I/O pin.
			EBI_AD12	I/O	MFP2	EBI address/data bus bit 12.
			QSPI0_CLK	I/O	MFP3	Quad SPI0 serial clock pin.
			SC2_PWR	O	MFP4	Smart Card 2 power pin.
			I2S0_DI	I	MFP5	I2S0 data input pin.
			SPI1_CLK	I/O	MFP6	SPI1 serial clock pin.
			UART3_nRTS	O	MFP7	UART3 request to Send output pin.
			I2C1_SMBAL	O	MFP8	I2C1 SMBus SMBALTER pin
			I2C2_SCL	I/O	MFP9	I2C2 clock pin.

64 Pin	64 Pin 2 USB	128 Pin	Pin Name	Type	MFP	Description
			UART1_TXD	O	MFP10	UART1 data transmitter output pin.
		108	PH.9	I/O	MFP0	General purpose digital I/O pin.
			EBI_AD13	I/O	MFP2	EBI address/data bus bit 13.
			QSPI0_SS	I/O	MFP3	Quad SPI0 slave select pin.
			SC2_RST	O	MFP4	Smart Card 2 reset pin.
			I2S0_DO	O	MFP5	I2S0 data output pin.
			SPI1_SS	I/O	MFP6	SPI1 slave select pin.
			UART3_nCTS	I	MFP7	UART3 clear to Send input pin.
			I2C1_SMBSUS	O	MFP8	I2C1 SMBus SMBSUS pin (PMBus CONTROL pin)
			I2C2_SDA	I/O	MFP9	I2C2 data input/output pin.
			UART1_RXD	I	MFP10	UART1 data receiver input pin.
		109	PH.10	I/O	MFP0	General purpose digital I/O pin.
			EBI_AD14	I/O	MFP2	EBI address/data bus bit 14.
			QSPI0_MISO1	I/O	MFP3	Quad SPI0 MISO1 (Master In, Slave Out) pin.
			SC2_nCD	I	MFP4	Smart Card 2 card detect pin.
			I2S0_LRCK	O	MFP5	I2S0 left right channel clock output pin.
			SPI1_I2SMCLK	I/O	MFP6	SPI1 I2S master clock output pin
			UART4_TXD	O	MFP7	UART4 data transmitter output pin.
			UART0_TXD	O	MFP8	UART0 data transmitter output pin.
		110	PH.11	I/O	MFP0	General purpose digital I/O pin.
			EBI_AD15	I/O	MFP2	EBI address/data bus bit 15.
			QSPI0_MOSI1	I/O	MFP3	Quad SPI0 MOSI1 (Master Out, Slave In) pin.
			UART4_RXD	I	MFP7	UART4 data receiver input pin.
			UART0_RXD	I	MFP8	UART0 data receiver input pin.
			EPWM0_CH5	I/O	MFP11	EPWM0 channel 5 output/capture input.
		111	PD.14	I/O	MFP0	General purpose digital I/O pin.
			EBI_nCS0	O	MFP2	EBI chip select 0 output pin.
			SPI3_I2SMCLK	I/O	MFP3	SPI3 I2S master clock output pin
			SC1_nCD	I	MFP4	Smart Card 1 card detect pin.
			EPWM0_CH4	I/O	MFP11	EPWM0 channel 4 output/capture input.
49	49	112	V_{SS}	P	MFP0	Ground pin for digital circuit.
50	50	113	LDO_CAP	A	MFP0	LDO output pin. **Note:** This pin needs to be connected with an external capacitor.
51	51	114	V_{DD}	P	MFP0	Power supply for I/O ports and LDO source for internal PLL

64 Pin	64 Pin 2 USB	128 Pin	Pin Name	Type	MFP	Description
						and digital circuit.
52	52	115	PC.14	I/O	MFP0	General purpose digital I/O pin.
			EBI_AD11	I/O	MFP2	EBI address/data bus bit 11.
			SC1_nCD	I	MFP3	Smart Card 1 card detect pin.
			SPI0_I2SMCLK	I/O	MFP4	SPI0 I2S master clock output pin
			USCI0_CTL0	I/O	MFP5	USCI0 control 0 pin.
			QSPI0_CLK	I/O	MFP6	Quad SPI0 serial clock pin.
			EPWM0_SYNC_IN	I	MFP11	EPWM0 counter synchronous trigger input pin.
			TM1	I/O	MFP13	Timer1 event counter input/toggle output pin.
			USB_VBUS_ST	I	MFP14	USB external V_{BUS} regulator status pin.
			HSUSB_VBUS_ST	I	MFP15	HSUSB external V_{BUS} regulator status pin.
53	53	116	PB.15	I/O	MFP0	General purpose digital I/O pin.
			EADC0_CH15	A	MFP1	EADC0 channel 15 analog input.
			EBI_AD12	I/O	MFP2	EBI address/data bus bit 12.
			SC1_PWR	O	MFP3	Smart Card 1 power pin.
			SPI0_SS	I/O	MFP4	SPI0 slave select pin.
			USCI0_CTL1	I/O	MFP5	USCI0 control 1 pin.
			UART0_nCTS	I	MFP6	UART0 clear to Send input pin.
			UART3_TXD	O	MFP7	UART3 data transmitter output pin.
			I2C2_SMBAL	O	MFP8	I2C2 SMBus SMBALTER pin
			EPWM1_CH0	I/O	MFP11	EPWM1 channel 0 output/capture input.
			TM0_EXT	I/O	MFP13	Timer0 external capture input/toggle output pin.
			USB_VBUS_EN	O	MFP14	USB external V_{BUS} regulator enable pin.
			HSUSB_VBUS_EN	O	MFP15	HSUSB external V_{BUS} regulator enable pin.
54	54	117	PB.14	I/O	MFP0	General purpose digital I/O pin.
			EADC0_CH14	A	MFP1	EADC0 channel 14 analog input.
			EBI_AD13	I/O	MFP2	EBI address/data bus bit 13.
			SC1_RST	O	MFP3	Smart Card 1 reset pin.
			SPI0_CLK	I/O	MFP4	SPI0 serial clock pin.
			USCI0_DAT1	I/O	MFP5	USCI0 data 1 pin.
			UART0_nRTS	O	MFP6	UART0 request to Send output pin.
			UART3_RXD	I	MFP7	UART3 data receiver input pin.
			I2C2_SMBSUS	O	MFP8	I2C2 SMBus SMBSUS pin (PMBus CONTROL pin)
			EPWM1_CH1	I/O	MFP11	EPWM1 channel 1 output/capture input.

64 Pin	64 Pin 2 USB	128 Pin	Pin Name	Type	MFP	Description
			TM1_EXT	I/O	MFP13	Timer1 external capture input/toggle output pin.
			CLKO	O	MFP14	Clock Out
55	55	118	PB.13	I/O	MFP0	General purpose digital I/O pin.
			EADC0_CH13	A	MFP1	EADC0 channel 13 analog input.
			DAC1_OUT	A	MFP1	DAC1 channel analog output.
			ACMP0_P3	A	MFP1	Analog comparator 0 positive input 3 pin.
			ACMP1_P3	A	MFP1	Analog comparator 1 positive input 3 pin.
			EBI_AD14	I/O	MFP2	EBI address/data bus bit 14.
			SC1_DAT	I/O	MFP3	Smart Card 1 data pin.
			SPI0_MISO	I/O	MFP4	SPI0 MISO (Master In, Slave Out) pin.
			USCI0_DAT0	I/O	MFP5	USCI0 data 0 pin.
			UART0_TXD	O	MFP6	UART0 data transmitter output pin.
			UART3_nRTS	O	MFP7	UART3 request to Send output pin.
			I2C2_SCL	I/O	MFP8	I2C2 clock pin.
			EPWM1_CH2	I/O	MFP11	EPWM1 channel 2 output/capture input.
			TM2_EXT	I/O	MFP13	Timer2 external capture input/toggle output pin.
56	56	119	PB.12	I/O	MFP0	General purpose digital I/O pin.
			EADC0_CH12	A	MFP1	EADC0 channel 12 analog input.
			DAC0_OUT	A	MFP1	DAC0 channel analog output.
			ACMP0_P2	A	MFP1	Analog comparator 0 positive input 2 pin.
			ACMP1_P2	A	MFP1	Analog comparator 1 positive input 2 pin.
			EBI_AD15	I/O	MFP2	EBI address/data bus bit 15.
			SC1_CLK	O	MFP3	Smart Card 1 clock pin.
			SPI0_MOSI	I/O	MFP4	SPI0 MOSI (Master Out, Slave In) pin.
			USCI0_CLK	I/O	MFP5	USCI0 clock pin.
			UART0_RXD	I	MFP6	UART0 data receiver input pin.
			UART3_nCTS	I	MFP7	UART3 clear to Send input pin.
			I2C2_SDA	I/O	MFP8	I2C2 data input/output pin.
			SD0_nCD	I	MFP9	SD/SDIO0 card detect input pin
			EPWM1_CH3	I/O	MFP11	EPWM1 channel 3 output/capture input.
			TM3_EXT	I/O	MFP13	Timer3 external capture input/toggle output pin.
57	57	120	AV_{DD}	P	MFP0	Power supply for internal analog circuit.
58	58	121	V_{REF}	A	MFP0	ADC reference voltage input. Note: This pin needs to be connected with a 1uF capacitor.

64 Pin	64 Pin 2 USB	128 Pin	Pin Name	Type	MFP	Description
59	59	122	AV_{SS}	P	MFP0	Ground pin for analog circuit.
60	60	123	PB.11	I/O	MFP0	General purpose digital I/O pin.
			EADC0_CH11	A	MFP1	EADC0 channel 11 analog input.
			EBI_ADR16	O	MFP2	EBI address bus bit 16.
			UART0_nCTS	I	MFP5	UART0 clear to Send input pin.
			UART4_TXD	O	MFP6	UART4 data transmitter output pin.
			I2C1_SCL	I/O	MFP7	I2C1 clock pin.
			SPI0_I2SMCLK	I/O	MFP9	SPI0 I2S master clock output pin
			BPWM1_CH0	I/O	MFP10	BPWM1 channel 0 output/capture input.
			SPI3_CLK	I/O	MFP11	SPI3 serial clock pin.
			HSUSB_VBUS_ST	I	MFP14	HSUSB external V_{BUS} regulator status pin.
61	61	124	PB.10	I/O	MFP0	General purpose digital I/O pin.
			EADC0_CH10	A	MFP1	EADC0 channel 10 analog input.
			EBI_ADR17	O	MFP2	EBI address bus bit 17.
			USCI1_CTL0	I/O	MFP4	USCI1 control 0 pin.
			UART0_nRTS	O	MFP5	UART0 request to Send output pin.
			UART4_RXD	I	MFP6	UART4 data receiver input pin.
			I2C1_SDA	I/O	MFP7	I2C1 data input/output pin.
			BPWM1_CH1	I/O	MFP10	BPWM1 channel 1 output/capture input.
			SPI3_SS	I/O	MFP11	SPI3 slave select pin.
			HSUSB_VBUS_EN	O	MFP14	HSUSB external V_{BUS} regulator enable pin.
62	62	125	PB.9	I/O	MFP0	General purpose digital I/O pin.
			EADC0_CH9	A	MFP1	EADC0 channel 9 analog input.
			EBI_ADR18	O	MFP2	EBI address bus bit 18.
			USCI1_CTL1	I/O	MFP4	USCI1 control 1 pin.
			UART0_TXD	O	MFP5	UART0 data transmitter output pin.
			UART1_nCTS	I	MFP6	UART1 clear to Send input pin.
			I2C1_SMBAL	O	MFP7	I2C1 SMBus SMBALTER pin
			BPWM1_CH2	I/O	MFP10	BPWM1 channel 2 output/capture input.
			SPI3_MISO	I/O	MFP11	SPI3 MISO (Master In, Slave Out) pin.
			INT7	I	MFP13	External interrupt 7 input pin.
63	63	126	PB.8	I/O	MFP0	General purpose digital I/O pin.
			EADC0_CH8	A	MFP1	EADC0 channel 8 analog input.
			EBI_ADR19	O	MFP2	EBI address bus bit 19.

64 Pin	64 Pin 2 USB	128 Pin	Pin Name	Type	MFP	Description
			USCI1_CLK	I/O	MFP4	USCI1 clock pin.
			UART0_RXD	I	MFP5	UART0 data receiver input pin.
			UART1_nRTS	O	MFP6	UART1 request to Send output pin.
			I2C1_SMBSUS	O	MFP7	I2C1 SMBus SMBSUS pin (PMBus CONTROL pin)
			BPWM1_CH3	I/O	MFP10	BPWM1 channel 3 output/capture input.
			SPI3_MOSI	I/O	MFP11	SPI3 MOSI (Master Out, Slave In) pin.
			INT6	I	MFP13	External interrupt 6 input pin.
64	64	127	PB.7	I/O	MFP0	General purpose digital I/O pin.
			EADC0_CH7	A	MFP1	EADC0 channel 7 analog input.
			EBI_nWRL	O	MFP2	EBI low byte write enable output pin.
			USCI1_DAT0	I/O	MFP4	USCI1 data 0 pin.
			UART1_TXD	O	MFP6	UART1 data transmitter output pin.
			SD1_CMD	I/O	MFP7	SD/SDIO1 command/response pin
			EBI_nCS0	O	MFP8	EBI chip select 0 output pin.
			BPWM1_CH4	I/O	MFP10	BPWM1 channel 4 output/capture input.
			EPWM1_BRAKE0	I	MFP11	EPWM1 Brake 0 input pin.
			EPWM1_CH4	I/O	MFP12	EPWM1 channel 4 output/capture input.
			INT5	I	MFP13	External interrupt 5 input pin.
			USB_VBUS_ST	I	MFP14	USB external V_{BUS} regulator status pin.
			ACMP0_O	O	MFP15	Analog comparator 0 output pin.
1	1	128	PB.6	I/O	MFP0	General purpose digital I/O pin.
			EADC0_CH6	A	MFP1	EADC0 channel 6 analog input.
			EBI_nWRH	O	MFP2	EBI high byte write enable output pin
			USCI1_DAT1	I/O	MFP4	USCI1 data 1 pin.
			UART1_RXD	I	MFP6	UART1 data receiver input pin.
			SD1_CLK	O	MFP7	SD/SDIO1 clock output pin
			EBI_nCS1	O	MFP8	EBI chip select 1 output pin.
			BPWM1_CH5	I/O	MFP10	BPWM1 channel 5 output/capture input.
			EPWM1_BRAKE1	I	MFP11	EPWM1 Brake 1 input pin.
			EPWM1_CH5	I/O	MFP12	EPWM1 channel 5 output/capture input.
			INT4	I	MFP13	External interrupt 4 input pin.
			USB_VBUS_EN	O	MFP14	USB external V_{BUS} regulator enable pin.
			ACMP1_O	O	MFP15	Analog comparator 1 output pin.

4.2.5 M485 Series Pin Description

Note: PA.15 MFP can only be as USB_OTG_ID when enable full-Speed USB.

33 Pin	48 Pin	64 Pin	128 Pin	Pin Name	Type	MFP	Description
1	1 3*	2	1	PB.5	I/O	MFP0	General purpose digital I/O pin.
				EADC0_CH5	A	MFP1	EADC0 channel 5 analog input.
				ACMP1_N	A	MFP1	Analog comparator 1 negative input pin.
				EBI_ADR0	O	MFP2	EBI address bus bit 0.
				SD0_DAT3	I/O	MFP3	SD/SDIO0 data line bit 3.
				SPI1_MISO	I/O	MFP5	SPI1 MISO (Master In, Slave Out) pin.
				I2C0_SCL	I/O	MFP6	I2C0 clock pin.
				UART5_TXD	O	MFP7	UART5 data transmitter output pin.
				USCI1_CTL0	I/O	MFP8	USCI1 control 0 pin.
				SC0_CLK	O	MFP9	Smart Card 0 clock pin.
				I2S0_BCLK	O	MFP10	I2S0 bit clock output pin.
				EPWM0_CH0	I/O	MFP11	EPWM0 channel 0 output/capture input.
				TM0	I/O	MFP14	Timer0 event counter input/toggle output pin.
				INT0	I	MFP15	External interrupt 0 input pin.
2	2 4*	3	2	PB.4	I/O	MFP0	General purpose digital I/O pin.
				EADC0_CH4	A	MFP1	EADC0 channel 4 analog input.
				ACMP1_P1	A	MFP1	Analog comparator 1 positive input 1 pin.
				EBI_ADR1	O	MFP2	EBI address bus bit 1.
				SD0_DAT2	I/O	MFP3	SD/SDIO0 data line bit 2.
				SPI1_MOSI	I/O	MFP5	SPI1 MOSI (Master Out, Slave In) pin.
				I2C0_SDA	I/O	MFP6	I2C0 data input/output pin.
				UART5_RXD	I	MFP7	UART5 data receiver input pin.
				USCI1_CTL1	I/O	MFP8	USCI1 control 1 pin.
				SC0_DAT	I/O	MFP9	Smart Card 0 data pin.
				I2S0_MCLK	O	MFP10	I2S0 master clock output pin.
				EPWM0_CH1	I/O	MFP11	EPWM0 channel 1 output/capture input.
				TM1	I/O	MFP14	Timer1 event counter input/toggle output pin.
				INT1	I	MFP15	External interrupt 1 input pin.
3	3 5*	4	3	PB.3	I/O	MFP0	General purpose digital I/O pin.
				EADC0_CH3	A	MFP1	EADC0 channel 3 analog input.
				ACMP0_N	A	MFP1	Analog comparator 0 negative input pin.
				EBI_ADR2	O	MFP2	EBI address bus bit 2.

33 Pin	48 Pin	64 Pin	128 Pin	Pin Name	Type	MFP	Description
				SD0_DAT1	I/O	MFP3	SD/SDIO0 data line bit 1.
				SPI1_CLK	I/O	MFP5	SPI1 serial clock pin.
				UART1_TXD	O	MFP6	UART1 data transmitter output pin.
				UART5_nRTS	O	MFP7	UART5 request to Send output pin.
				USCI1_DAT1	I/O	MFP8	USCI1 data 1 pin.
				SC0_RST	O	MFP9	Smart Card 0 reset pin.
				I2S0_DI	I	MFP10	I2S0 data input pin.
				EPWM0_CH2	I/O	MFP11	EPWM0 channel 2 output/capture input.
				TM2	I/O	MFP14	Timer2 event counter input/toggle output pin.
				INT2	I	MFP15	External interrupt 2 input pin.
4	4 6*	5	4	PB.2	I/O	MFP0	General purpose digital I/O pin.
				EADC0_CH2	A	MFP1	EADC0 channel 2 analog input.
				ACMP0_P1	A	MFP1	Analog comparator 0 positive input 1 pin.
				OPA0_O	A	MFP1	Operational amplifier 0 output pin.
				EBI_ADR3	O	MFP2	EBI address bus bit 3.
				SD0_DAT0	I/O	MFP3	SD/SDIO0 data line bit 0.
				SPI1_SS	I/O	MFP5	SPI1 slave select pin.
				UART1_RXD	I	MFP6	UART1 data receiver input pin.
				UART5_nCTS	I	MFP7	UART5 clear to Send input pin.
				USCI1_DAT0	I/O	MFP8	USCI1 data 0 pin.
				SC0_PWR	O	MFP9	Smart Card 0 power pin.
				I2S0_DO	O	MFP10	I2S0 data output pin.
				EPWM0_CH3	I/O	MFP11	EPWM0 channel 3 output/capture input.
				TM3	I/O	MFP14	Timer3 event counter input/toggle output pin.
				INT3	I	MFP15	External interrupt 3 input pin.
			5	PC.12	I/O	MFP0	General purpose digital I/O pin.
				EBI_ADR4	O	MFP2	EBI address bus bit 4.
				UART0_TXD	O	MFP3	UART0 data transmitter output pin.
				I2C0_SCL	I/O	MFP4	I2C0 clock pin.
				SPI3_MISO	I/O	MFP6	SPI3 MISO (Master In, Slave Out) pin.
				SC0_nCD	I	MFP9	Smart Card 0 card detect pin.
				ECAP1_IC2	I	MFP11	Enhanced capture unit 1 input 2 pin.
				EPWM1_CH0	I/O	MFP12	EPWM1 channel 0 output/capture input.
				ACMP0_O	O	MFP14	Analog comparator 0 output pin.

33 Pin	48 Pin	64 Pin	128 Pin	Pin Name	Type	MFP	Description
			6	PC.11	I/O	MFP0	General purpose digital I/O pin.
				EBI_ADR5	O	MFP2	EBI address bus bit 5.
				UART0_RXD	I	MFP3	UART0 data receiver input pin.
				I2C0_SDA	I/O	MFP4	I2C0 data input/output pin.
				SPI3_MOSI	I/O	MFP6	SPI3 MOSI (Master Out, Slave In) pin.
				ECAP1_IC1	I	MFP11	Enhanced capture unit 1 input 1 pin.
				EPWM1_CH1	I/O	MFP12	EPWM1 channel 1 output/capture input.
				ACMP1_O	O	MFP14	Analog comparator 1 output pin.
			7	PC.10	I/O	MFP0	General purpose digital I/O pin.
				EBI_ADR6	O	MFP2	EBI address bus bit 6.
				SPI3_CLK	I/O	MFP6	SPI3 serial clock pin.
				UART3_TXD	O	MFP7	UART3 data transmitter output pin.
				CAN1_TXD	O	MFP9	CAN1 bus transmitter output.
				ECAP1_IC0	I	MFP11	Enhanced capture unit 1 input 0 pin.
				EPWM1_CH2	I/O	MFP12	EPWM1 channel 2 output/capture input.
			8	PC.9	I/O	MFP0	General purpose digital I/O pin.
				EBI_ADR7	O	MFP2	EBI address bus bit 7.
				SPI3_SS	I/O	MFP6	SPI3 slave select pin.
				UART3_RXD	I	MFP7	UART3 data receiver input pin.
				CAN1_RXD	I	MFP9	CAN1 bus receiver input.
				EPWM1_CH3	I/O	MFP12	EPWM1 channel 3 output/capture input.
5	5 7*	6	9	PB.1	I/O	MFP0	General purpose digital I/O pin.
				EADC0_CH1	A	MFP1	EADC0 channel 1 analog input.
				OPA0_N	A	MFP1	Operational amplifier 0 negative input pin.
				EBI_ADR8	O	MFP2	EBI address bus bit 8.
				SD0_CLK	O	MFP3	SD/SDIO0 clock output pin
				SPI1_I2SMCLK	I/O	MFP5	SPI1 I2S master clock output pin
				SPI3_I2SMCLK	I/O	MFP6	SPI3 I2S master clock output pin
				UART2_TXD	O	MFP7	UART2 data transmitter output pin.
				USCI1_CLK	I/O	MFP8	USCI1 clock pin.
				I2C1_SCL	I/O	MFP9	I2C1 clock pin.
				I2S0_LRCK	O	MFP10	I2S0 left right channel clock output pin.
				EPWM0_CH4	I/O	MFP11	EPWM0 channel 4 output/capture input.
				EPWM1_CH4	I/O	MFP12	EPWM1 channel 4 output/capture input.

33 Pin	48 Pin	64 Pin	128 Pin	Pin Name	Type	MFP	Description
				EPWM0_BRAKE0	I	MFP13	EPWM0 Brake 0 input pin.
6	6 8*	7	10	PB.0	I/O	MFP0	General purpose digital I/O pin.
				EADC0_CH0	A	MFP1	EADC0 channel 0 analog input.
				OPA0_P	A	MFP1	Operational amplifier 0 positive input pin.
				EBI_ADR9	O	MFP2	EBI address bus bit 9.
				SD0_CMD	I/O	MFP3	SD/SDIO0 command/response pin
				UART2_RXD	I	MFP7	UART2 data receiver input pin.
				SPI0_I2SMCLK	I/O	MFP8	SPI0 I2S master clock output pin
				I2C1_SDA	I/O	MFP9	I2C1 data input/output pin.
				EPWM0_CH5	I/O	MFP11	EPWM0 channel 5 output/capture input.
				EPWM1_CH5	I/O	MFP12	EPWM1 channel 5 output/capture input.
				EPWM0_BRAKE1	I	MFP13	EPWM0 Brake 1 input pin.
			11	VSS	P	MFP0	Ground pin for digital circuit.
			12	VDD	P	MFP0	Power supply for I/O ports and LDO source for internal PLL and digital circuit.
	7 9*	8	13	PA.11	I/O	MFP0	General purpose digital I/O pin.
				ACMP0_P0	A	MFP1	Analog comparator 0 positive input 0 pin.
				EBI_nRD	O	MFP2	EBI read enable output pin.
				SC2_PWR	O	MFP3	Smart Card 2 power pin.
				SPI2_SS	I/O	MFP4	SPI2 slave select pin.
				SD1_DAT3	I/O	MFP5	SD/SDIO1 data line bit 3.
				USCI0_CLK	I/O	MFP6	USCI0 clock pin.
				I2C2_SCL	I/O	MFP7	I2C2 clock pin.
				BPWM0_CH0	I/O	MFP9	BPWM0 channel 0 output/capture input.
				EPWM0_SYNC_OUT	O	MFP10	EPWM0 counter synchronous trigger output pin.
				TM0_EXT	I/O	MFP13	Timer0 external capture input/toggle output pin.
				DAC1_ST	I	MFP14	DAC1 external trigger input.
	8 10*	9	14	PA.10	I/O	MFP0	General purpose digital I/O pin.
				ACMP1_P0	A	MFP1	Analog comparator 1 positive input 0 pin.
				OPA1_O	A	MFP1	Operational amplifier 1 output pin.
				EBI_nWR	O	MFP2	EBI write enable output pin.
				SC2_RST	O	MFP3	Smart Card 2 reset pin.
				SPI2_CLK	I/O	MFP4	SPI2 serial clock pin.
				SD1_DAT2	I/O	MFP5	SD/SDIO1 data line bit 2.

33 Pin	48 Pin	64 Pin	128 Pin	Pin Name	Type	MFP	Description
				USCI0_DAT0	I/O	MFP6	USCI0 data 0 pin.
				I2C2_SDA	I/O	MFP7	I2C2 data input/output pin.
				BPWM0_CH1	I/O	MFP9	BPWM0 channel 1 output/capture input.
				QEI1_INDEX	I	MFP10	Quadrature encoder 1 index input
				ECAP0_IC0	I	MFP11	Enhanced capture unit 0 input 0 pin.
				TM1_EXT	I/O	MFP13	Timer1 external capture input/toggle output pin.
				DAC0_ST	I	MFP14	DAC0 external trigger input.
	9	10	15	PA.9	I/O	MFP0	General purpose digital I/O pin.
				OPA1_N	A	MFP1	Operational amplifier 1 negative input pin.
				EBI_MCLK	O	MFP2	EBI external clock output pin.
				SC2_DAT	I/O	MFP3	Smart Card 2 data pin.
				SPI2_MISO	I/O	MFP4	SPI2 MISO (Master In, Slave Out) pin.
				SD1_DAT1	I/O	MFP5	SD/SDIO1 data line bit 1.
				USCI0_DAT1	I/O	MFP6	USCI0 data 1 pin.
				UART1_TXD	O	MFP7	UART1 data transmitter output pin.
				BPWM0_CH2	I/O	MFP9	BPWM0 channel 2 output/capture input.
				QEI1_A	I	MFP10	Quadrature encoder 1 phase A input
				ECAP0_IC1	I	MFP11	Enhanced capture unit 0 input 1 pin.
				TM2_EXT	I/O	MFP13	Timer2 external capture input/toggle output pin.
	10	11	16	PA.8	I/O	MFP0	General purpose digital I/O pin.
				OPA1_P	A	MFP1	Operational amplifier 1 positive input pin.
				EBI_ALE	O	MFP2	EBI address latch enable output pin.
				SC2_CLK	O	MFP3	Smart Card 2 clock pin.
				SPI2_MOSI	I/O	MFP4	SPI2 MOSI (Master Out, Slave In) pin.
				SD1_DAT0	I/O	MFP5	SD/SDIO1 data line bit 0.
				USCI0_CTL1	I/O	MFP6	USCI0 control 1 pin.
				UART1_RXD	I	MFP7	UART1 data receiver input pin.
				BPWM0_CH3	I/O	MFP9	BPWM0 channel 3 output/capture input.
				QEI1_B	I	MFP10	Quadrature encoder 1 phase B input
				ECAP0_IC2	I	MFP11	Enhanced capture unit 0 input 2 pin.
				TM3_EXT	I/O	MFP13	Timer3 external capture input/toggle output pin.
				INT4	I	MFP15	External interrupt 4 input pin.
			17	PC.13	I/O	MFP0	General purpose digital I/O pin.
				EBI_ADR10	O	MFP2	EBI address bus bit 10.

33 Pin	48 Pin	64 Pin	128 Pin	Pin Name	Type	MFP	Description
				SC2_nCD	I	MFP3	Smart Card 2 card detect pin.
				SPI2_I2SMCLK	I/O	MFP4	SPI2 I2S master clock output pin
				CAN1_TXD	O	MFP5	CAN1 bus transmitter output.
				USCI0_CTL0	I/O	MFP6	USCI0 control 0 pin.
				UART2_TXD	O	MFP7	UART2 data transmitter output pin.
				BPWM0_CH4	I/O	MFP9	BPWM0 channel 4 output/capture input.
				CLKO	O	MFP13	Clock Out
				EADC0_ST	I	MFP14	EADC0 external trigger input.
			18	PD.12	I/O	MFP0	General purpose digital I/O pin.
				OPA2_O	A	MFP1	Operational amplifier 2 output pin.
				EBI_nCS0	O	MFP2	EBI chip select 0 output pin.
				CAN1_RXD	I	MFP5	CAN1 bus receiver input.
				UART2_RXD	I	MFP7	UART2 data receiver input pin.
				BPWM0_CH5	I/O	MFP9	BPWM0 channel 5 output/capture input.
				QEI0_INDEX	I	MFP10	Quadrature encoder 0 index input
				CLKO	O	MFP13	Clock Out
				EADC0_ST	I	MFP14	EADC0 external trigger input.
				INT5	I	MFP15	External interrupt 5 input pin.
			19	PD.11	I/O	MFP0	General purpose digital I/O pin.
				OPA2_N	A	MFP1	Operational amplifier 2 negative input pin.
				EBI_nCS1	O	MFP2	EBI chip select 1 output pin.
				UART1_TXD	O	MFP3	UART1 data transmitter output pin.
				CAN0_TXD	O	MFP4	CAN0 bus transmitter output.
				QEI0_A	I	MFP10	Quadrature encoder 0 phase A input
				INT6	I	MFP15	External interrupt 6 input pin.
			20	PD.10	I/O	MFP0	General purpose digital I/O pin.
				OPA2_P	A	MFP1	Operational amplifier 2 positive input pin.
				EBI_nCS2	O	MFP2	EBI chip select 2 output pin.
				UART1_RXD	I	MFP3	UART1 data receiver input pin.
				CAN0_RXD	I	MFP4	CAN0 bus receiver input.
				QEI0_B	I	MFP10	Quadrature encoder 0 phase B input
				INT7	I	MFP15	External interrupt 7 input pin.
			21	PG.2	I/O	MFP0	General purpose digital I/O pin.
				EBI_ADR11	O	MFP2	EBI address bus bit 11.

33 Pin	48 Pin	64 Pin	128 Pin	Pin Name	Type	MFP	Description
				SPI2_SS	I/O	MFP3	SPI2 slave select pin.
				I2C0_SMBAL	O	MFP4	I2C0 SMBus SMBALTER pin
				I2C1_SCL	I/O	MFP5	I2C1 clock pin.
				TM0	I/O	MFP13	Timer0 event counter input/toggle output pin.
			22	PG.3	I/O	MFP0	General purpose digital I/O pin.
				EBI_ADR12	O	MFP2	EBI address bus bit 12.
				SPI2_CLK	I/O	MFP3	SPI2 serial clock pin.
				I2C0_SMBSUS	O	MFP4	I2C0 SMBus SMBSUS pin (PMBus CONTROL pin)
				I2C1_SDA	I/O	MFP5	I2C1 data input/output pin.
				TM1	I/O	MFP13	Timer1 event counter input/toggle output pin.
			23	PG.4	I/O	MFP0	General purpose digital I/O pin.
				EBI_ADR13	O	MFP2	EBI address bus bit 13.
				SPI2_MISO	I/O	MFP3	SPI2 MISO (Master In, Slave Out) pin.
				TM2	I/O	MFP13	Timer2 event counter input/toggle output pin.
			24	PF.11	I/O	MFP0	General purpose digital I/O pin.
				EBI_ADR14	O	MFP2	EBI address bus bit 14.
				SPI2_MOSI	I/O	MFP3	SPI2 MOSI (Master Out, Slave In) pin.
				TAMPER5	I/O	MFP10	TAMPER detector loop pin 5.
				TM3	I/O	MFP13	Timer3 event counter input/toggle output pin.
			25	PF.10	I/O	MFP0	General purpose digital I/O pin.
				EBI_ADR15	O	MFP2	EBI address bus bit 15.
				SC0_nCD	I	MFP3	Smart Card 0 card detect pin.
				I2S0_BCLK	O	MFP4	I2S0 bit clock output pin.
				SPI0_I2SMCLK	I/O	MFP5	SPI0 I2S master clock output pin
				TAMPER4	I/O	MFP10	TAMPER detector loop pin 4.
			26	PF.9	I/O	MFP0	General purpose digital I/O pin.
				EBI_ADR16	O	MFP2	EBI address bus bit 16.
				SC0_PWR	O	MFP3	Smart Card 0 power pin.
				I2S0_MCLK	O	MFP4	I2S0 master clock output pin.
				SPI0_SS	I/O	MFP5	SPI0 slave select pin.
				TAMPER3	I/O	MFP10	TAMPER detector loop pin 3.
			27	PF.8	I/O	MFP0	General purpose digital I/O pin.
				EBI_ADR17	O	MFP2	EBI address bus bit 17.
				SC0_RST	O	MFP3	Smart Card 0 reset pin.

33 Pin	48 Pin	64 Pin	128 Pin	Pin Name	Type	MFP	Description
				I2S0_DI	I	MFP4	I2S0 data input pin.
				SPI0_CLK	I/O	MFP5	SPI0 serial clock pin.
				TAMPER2	I/O	MFP10	TAMPER detector loop pin 2.
			28	PF.7	I/O	MFP0	General purpose digital I/O pin.
				EBI_ADR18	O	MFP2	EBI address bus bit 18.
				SC0_DAT	I/O	MFP3	Smart Card 0 data pin.
				I2S0_DO	O	MFP4	I2S0 data output pin.
				SPI0_MISO	I/O	MFP5	SPI0 MISO (Master In, Slave Out) pin.
				UART4_TXD	O	MFP6	UART4 data transmitter output pin.
				TAMPER1	I/O	MFP10	TAMPER detector loop pin 1.
		12	29	PF.6	I/O	MFP0	General purpose digital I/O pin.
				EBI_ADR19	O	MFP2	EBI address bus bit 19.
				SC0_CLK	O	MFP3	Smart Card 0 clock pin.
				I2S0_LRCK	O	MFP4	I2S0 left right channel clock output pin.
				SPI0_MOSI	I/O	MFP5	SPI0 MOSI (Master Out, Slave In) pin.
				UART4_RXD	I	MFP6	UART4 data receiver input pin.
				EBI_nCS0	O	MFP7	EBI chip select 0 output pin.
				TAMPER0	I/O	MFP10	TAMPER detector loop pin 0.
		13	30	V_{DD}	P	MFP0	Power supply for I/O ports and LDO source for internal PLL and digital circuit.
7	11 11*	14	31	PF.5	I/O	MFP0	General purpose digital I/O pin.
				UART2_RXD	I	MFP2	UART2 data receiver input pin.
				UART2_nCTS	I	MFP4	UART2 clear to Send input pin.
				BPWM0_CH4	I/O	MFP8	BPWM0 channel 4 output/capture input.
				EPWM0_SYNC_OUT	O	MFP9	EPWM0 counter synchronous trigger output pin.
				X32_IN	I	MFP10	External 32.768 kHz crystal input pin.
				EADC0_ST	I	MFP11	EADC0 external trigger input.
8	12 12*	15	32	PF.4	I/O	MFP0	General purpose digital I/O pin.
				UART2_TXD	O	MFP2	UART2 data transmitter output pin.
				UART2_nRTS	O	MFP4	UART2 request to Send output pin.
				BPWM0_CH5	I/O	MFP8	BPWM0 channel 5 output/capture input.
				X32_OUT	O	MFP10	External 32.768 kHz crystal output pin.
			33	PH.4	I/O	MFP0	General purpose digital I/O pin.
				EBI_ADR3	O	MFP2	EBI address bus bit 3.

33 Pin	48 Pin	64 Pin	128 Pin	Pin Name	Type	MFP	Description
				SPI1_MISO	I/O	MFP3	SPI1 MISO (Master In, Slave Out) pin.
			34	PH.5	I/O	MFP0	General purpose digital I/O pin.
				EBI_ADR2	O	MFP2	EBI address bus bit 2.
				SPI1_MOSI	I/O	MFP3	SPI1 MOSI (Master Out, Slave In) pin.
			35	PH.6	I/O	MFP0	General purpose digital I/O pin.
				EBI_ADR1	O	MFP2	EBI address bus bit 1.
				SPI1_CLK	I/O	MFP3	SPI1 serial clock pin.
			36	PH.7	I/O	MFP0	General purpose digital I/O pin.
				EBI_ADR0	O	MFP2	EBI address bus bit 0.
				SPI1_SS	I/O	MFP3	SPI1 slave select pin.
9	13 13*	16	37	PF.3	I/O	MFP0	General purpose digital I/O pin.
				EBI_nCS0	O	MFP2	EBI chip select 0 output pin.
				UART0_TXD	O	MFP3	UART0 data transmitter output pin.
				I2C0_SCL	I/O	MFP4	I2C0 clock pin.
				XT1_IN	I	MFP10	External 4~24 MHz (high speed) crystal input pin.
				BPWM1_CH0	I/O	MFP11	BPWM1 channel 0 output/capture input.
10	14 14*	17	38	PF.2	I/O	MFP0	General purpose digital I/O pin.
				EBI_nCS1	O	MFP2	EBI chip select 1 output pin.
				UART0_RXD	I	MFP3	UART0 data receiver input pin.
				I2C0_SDA	I/O	MFP4	I2C0 data input/output pin.
				QSPI0_CLK	I/O	MFP5	Quad SPI0 serial clock pin.
				XT1_OUT	O	MFP10	External 4~24 MHz (high speed) crystal output pin.
				BPWM1_CH1	I/O	MFP11	BPWM1 channel 1 output/capture input.
			39	VSS	P	MFP0	Ground pin for digital circuit.
			40	VDD	P	MFP0	Power supply for I/O ports and LDO source for internal PLL and digital circuit.
			41	PE.8	I/O	MFP0	General purpose digital I/O pin.
				EBI_ADR10	O	MFP2	EBI address bus bit 10.
				I2S0_BCLK	O	MFP4	I2S0 bit clock output pin.
				SPI2_CLK	I/O	MFP5	SPI2 serial clock pin.
				USCI1_CTL1	I/O	MFP6	USCI1 control 1 pin.
				UART2_TXD	O	MFP7	UART2 data transmitter output pin.
				EPWM0_CH0	I/O	MFP10	EPWM0 channel 0 output/capture input.
				EPWM0_BRAKE0	I	MFP11	EPWM0 Brake 0 input pin.

33 Pin	48 Pin	64 Pin	128 Pin	Pin Name	Type	MFP	Description
				ECAP0_IC0	I	MFP12	Enhanced capture unit 0 input 0 pin.
				TRACE_DATA3	O	MFP14	ETM Trace Data 3 output pin
			42	PE.9	I/O	MFP0	General purpose digital I/O pin.
				EBI_ADR11	O	MFP2	EBI address bus bit 11.
				I2S0_MCLK	O	MFP4	I2S0 master clock output pin.
				SPI2_MISO	I/O	MFP5	SPI2 MISO (Master In, Slave Out) pin.
				USCI1_CTL0	I/O	MFP6	USCI1 control 0 pin.
				UART2_RXD	I	MFP7	UART2 data receiver input pin.
				EPWM0_CH1	I/O	MFP10	EPWM0 channel 1 output/capture input.
				EPWM0_BRAKE1	I	MFP11	EPWM0 Brake 1 input pin.
				ECAP0_IC1	I	MFP12	Enhanced capture unit 0 input 1 pin.
				TRACE_DATA2	O	MFP14	ETM Trace Data 2 output pin
			43	PE.10	I/O	MFP0	General purpose digital I/O pin.
				EBI_ADR12	O	MFP2	EBI address bus bit 12.
				I2S0_DI	I	MFP4	I2S0 data input pin.
				SPI2_MOSI	I/O	MFP5	SPI2 MOSI (Master Out, Slave In) pin.
				USCI1_DAT0	I/O	MFP6	USCI1 data 0 pin.
				UART3_TXD	O	MFP7	UART3 data transmitter output pin.
				EPWM0_CH2	I/O	MFP10	EPWM0 channel 2 output/capture input.
				EPWM1_BRAKE0	I	MFP11	EPWM1 Brake 0 input pin.
				ECAP0_IC2	I	MFP12	Enhanced capture unit 0 input 2 pin.
				TRACE_DATA1	O	MFP14	ETM Trace Data 1 output pin
			44	PE.11	I/O	MFP0	General purpose digital I/O pin.
				EBI_ADR13	O	MFP2	EBI address bus bit 13.
				I2S0_DO	O	MFP4	I2S0 data output pin.
				SPI2_SS	I/O	MFP5	SPI2 slave select pin.
				USCI1_DAT1	I/O	MFP6	USCI1 data 1 pin.
				UART3_RXD	I	MFP7	UART3 data receiver input pin.
				UART1_nCTS	I	MFP8	UART1 clear to Send input pin.
				EPWM0_CH3	I/O	MFP10	EPWM0 channel 3 output/capture input.
				EPWM1_BRAKE1	I	MFP11	EPWM1 Brake 1 input pin.
				ECAP1_IC2	I	MFP13	Enhanced capture unit 1 input 2 pin.
				TRACE_DATA0	O	MFP14	ETM Trace Data 0 output pin
			45	PE.12	I/O	MFP0	General purpose digital I/O pin.

33 Pin	48 Pin	64 Pin	128 Pin	Pin Name	Type	MFP	Description
				EBI_ADR14	O	MFP2	EBI address bus bit 14.
				I2S0_LRCK	O	MFP4	I2S0 left right channel clock output pin.
				SPI2_I2SMCLK	I/O	MFP5	SPI2 I2S master clock output pin
				USCI1_CLK	I/O	MFP6	USCI1 clock pin.
				UART1_nRTS	O	MFP8	UART1 request to Send output pin.
				EPWM0_CH4	I/O	MFP10	EPWM0 channel 4 output/capture input.
				ECAP1_IC1	I	MFP13	Enhanced capture unit 1 input 1 pin.
				TRACE_CLK	O	MFP14	ETM Trace Clock output pin
			46	PE.13	I/O	MFP0	General purpose digital I/O pin.
				EBI_ADR15	O	MFP2	EBI address bus bit 15.
				I2C0_SCL	I/O	MFP4	I2C0 clock pin.
				UART4_nRTS	O	MFP5	UART4 request to Send output pin.
				UART1_TXD	O	MFP8	UART1 data transmitter output pin.
				EPWM0_CH5	I/O	MFP10	EPWM0 channel 5 output/capture input.
				EPWM1_CH0	I/O	MFP11	EPWM1 channel 0 output/capture input.
				BPWM1_CH5	I/O	MFP12	BPWM1 channel 5 output/capture input.
				ECAP1_IC0	I	MFP13	Enhanced capture unit 1 input 0 pin.
			47	PC.8	I/O	MFP0	General purpose digital I/O pin.
				EBI_ADR16	O	MFP2	EBI address bus bit 16.
				I2C0_SDA	I/O	MFP4	I2C0 data input/output pin.
				UART4_nCTS	I	MFP5	UART4 clear to Send input pin.
				UART1_RXD	I	MFP8	UART1 data receiver input pin.
				EPWM1_CH1	I/O	MFP11	EPWM1 channel 1 output/capture input.
				BPWM1_CH4	I/O	MFP12	BPWM1 channel 4 output/capture input.
		18	48	PC.7	I/O	MFP0	General purpose digital I/O pin.
				EBI_AD9	I/O	MFP2	EBI address/data bus bit 9.
				SPI1_MISO	I/O	MFP4	SPI1 MISO (Master In, Slave Out) pin.
				UART4_TXD	O	MFP5	UART4 data transmitter output pin.
				SC2_PWR	O	MFP6	Smart Card 2 power pin.
				UART0_nCTS	I	MFP7	UART0 clear to Send input pin.
				I2C1_SMBAL	O	MFP8	I2C1 SMBus SMBALTER pin
				EPWM1_CH2	I/O	MFP11	EPWM1 channel 2 output/capture input.
				BPWM1_CH0	I/O	MFP12	BPWM1 channel 0 output/capture input.
				TM0	I/O	MFP14	Timer0 event counter input/toggle output pin.

33 Pin	48 Pin	64 Pin	128 Pin	Pin Name	Type	MFP	Description
				INT3	I	MFP15	External interrupt 3 input pin.
		19	49	PC.6	I/O	MFP0	General purpose digital I/O pin.
				EBI_AD8	I/O	MFP2	EBI address/data bus bit 8.
				SPI1_MOSI	I/O	MFP4	SPI1 MOSI (Master Out, Slave In) pin.
				UART4_RXD	I	MFP5	UART4 data receiver input pin.
				SC2_RST	O	MFP6	Smart Card 2 reset pin.
				UART0_nRTS	O	MFP7	UART0 request to Send output pin.
				I2C1_SMBSUS	O	MFP8	I2C1 SMBus SMBSUS pin (PMBus CONTROL pin)
				EPWM1_CH3	I/O	MFP11	EPWM1 channel 3 output/capture input.
				BPWM1_CH1	I/O	MFP12	BPWM1 channel 1 output/capture input.
				TM1	I/O	MFP14	Timer1 event counter input/toggle output pin.
				INT2	I	MFP15	External interrupt 2 input pin.
	15	20	50	PA.7	I/O	MFP0	General purpose digital I/O pin.
				EBI_AD7	I/O	MFP2	EBI address/data bus bit 7.
				SPI1_CLK	I/O	MFP4	SPI1 serial clock pin.
				SC2_DAT	I/O	MFP6	Smart Card 2 data pin.
				UART0_TXD	O	MFP7	UART0 data transmitter output pin.
				I2C1_SCL	I/O	MFP8	I2C1 clock pin.
				EPWM1_CH4	I/O	MFP11	EPWM1 channel 4 output/capture input.
				BPWM1_CH2	I/O	MFP12	BPWM1 channel 2 output/capture input.
				ACMP0_WLAT	I	MFP13	Analog comparator 0 window latch input pin
				TM2	I/O	MFP14	Timer2 event counter input/toggle output pin.
				INT1	I	MFP15	External interrupt 1 input pin.
	16	21	51	PA.6	I/O	MFP0	General purpose digital I/O pin.
				EBI_AD6	I/O	MFP2	EBI address/data bus bit 6.
				SPI1_SS	I/O	MFP4	SPI1 slave select pin.
				SD1_nCD	I	MFP5	SD/SDIO1 card detect input pin
				SC2_CLK	O	MFP6	Smart Card 2 clock pin.
				UART0_RXD	I	MFP7	UART0 data receiver input pin.
				I2C1_SDA	I/O	MFP8	I2C1 data input/output pin.
				EPWM1_CH5	I/O	MFP11	EPWM1 channel 5 output/capture input.
				BPWM1_CH3	I/O	MFP12	BPWM1 channel 3 output/capture input.
				ACMP1_WLAT	I	MFP13	Analog comparator 1 window latch input pin
				TM3	I/O	MFP14	Timer3 event counter input/toggle output pin.

33 Pin	48 Pin	64 Pin	128 Pin	Pin Name	Type	MFP	Description
				INT0	I	MFP15	External interrupt 0 input pin.
		22	52	VSS	P	MFP0	Ground pin for digital circuit.
		23	53	VDD	P	MFP0	Power supply for I/O ports and LDO source for internal PLL and digital circuit.
		24	54	LDO_CAP	A	MFP0	LDO output pin. **Note:** This pin needs to be connected with an external capacitor.
	17 15*	25	55	PA.5	I/O	MFP0	General purpose digital I/O pin.
				SPIM_D2	I/O	MFP2	SPIM data 2 pin for Quad Mode I/O.
				QSPI0_MISO1	I/O	MFP3	Quad SPI0 MISO1 (Master In, Slave Out) pin.
				SPI1_I2SMCLK	I/O	MFP4	SPI1 I2S master clock output pin
				SD1_CMD	I/O	MFP5	SD/SDIO1 command/response pin
				SC2_nCD	I	MFP6	Smart Card 2 card detect pin.
				UART0_nCTS	I	MFP7	UART0 clear to Send input pin.
				UART5_TXD	O	MFP8	UART5 data transmitter output pin.
				I2C0_SCL	I/O	MFP9	I2C0 clock pin.
				CAN0_TXD	O	MFP10	CAN0 bus transmitter output.
				BPWM0_CH5	I/O	MFP12	BPWM0 channel 5 output/capture input.
				EPWM0_CH0	I/O	MFP13	EPWM0 channel 0 output/capture input.
				QEI0_INDEX	I	MFP14	Quadrature encoder 0 index input
	18 16*	26	56	PA.4	I/O	MFP0	General purpose digital I/O pin.
				SPIM_D3	I/O	MFP2	SPIM data 3 pin for Quad Mode I/O.
				QSPI0_MOSI1	I/O	MFP3	Quad SPI0 MOSI1 (Master Out, Slave In) pin.
				SPI0_I2SMCLK	I/O	MFP4	SPI0 I2S master clock output pin
				SD1_CLK	O	MFP5	SD/SDIO1 clock output pin
				SC0_nCD	I	MFP6	Smart Card 0 card detect pin.
				UART0_nRTS	O	MFP7	UART0 request to Send output pin.
				UART5_RXD	I	MFP8	UART5 data receiver input pin.
				I2C0_SDA	I/O	MFP9	I2C0 data input/output pin.
				CAN0_RXD	I	MFP10	CAN0 bus receiver input.
				BPWM0_CH4	I/O	MFP12	BPWM0 channel 4 output/capture input.
				EPWM0_CH1	I/O	MFP13	EPWM0 channel 1 output/capture input.
				QEI0_A	I	MFP14	Quadrature encoder 0 phase A input
11	19 17*	27	57	PA.3	I/O	MFP0	General purpose digital I/O pin.
				SPIM_SS	I/O	MFP2	SPIM slave select pin.

33 Pin	48 Pin	64 Pin	128 Pin	Pin Name	Type	MFP	Description
				QSPI0_SS	I/O	MFP3	Quad SPI0 slave select pin.
				SPI0_SS	I/O	MFP4	SPI0 slave select pin.
				SD1_DAT3	I/O	MFP5	SD/SDIO1 data line bit 3.
				SC0_PWR	O	MFP6	Smart Card 0 power pin.
				UART4_TXD	O	MFP7	UART4 data transmitter output pin.
				UART1_TXD	O	MFP8	UART1 data transmitter output pin.
				I2C1_SCL	I/O	MFP9	I2C1 clock pin.
				BPWM0_CH3	I/O	MFP12	BPWM0 channel 3 output/capture input.
				EPWM0_CH2	I/O	MFP13	EPWM0 channel 2 output/capture input.
				QEI0_B	I	MFP14	Quadrature encoder 0 phase B input
12	20 18*	28	58	PA.2	I/O	MFP0	General purpose digital I/O pin.
				SPIM_CLK	I/O	MFP2	SPIM serial clock pin.
				QSPI0_CLK	I/O	MFP3	Quad SPI0 serial clock pin.
				SPI0_CLK	I/O	MFP4	SPI0 serial clock pin.
				SD1_DAT2	I/O	MFP5	SD/SDIO1 data line bit 2.
				SC0_RST	O	MFP6	Smart Card 0 reset pin.
				UART4_RXD	I	MFP7	UART4 data receiver input pin.
				UART1_RXD	I	MFP8	UART1 data receiver input pin.
				I2C1_SDA	I/O	MFP9	I2C1 data input/output pin.
				BPWM0_CH2	I/O	MFP12	BPWM0 channel 2 output/capture input.
				EPWM0_CH3	I/O	MFP13	EPWM0 channel 3 output/capture input.
13	21 19*	29	59	PA.1	I/O	MFP0	General purpose digital I/O pin.
				SPIM_MISO	I/O	MFP2	SPIM MISO (Master In, Slave Out) pin.
				QSPI0_MISO0	I/O	MFP3	Quad SPI0 MISO0 (Master In, Slave Out) pin.
				SPI0_MISO	I/O	MFP4	SPI0 MISO (Master In, Slave Out) pin.
				SD1_DAT1	I/O	MFP5	SD/SDIO1 data line bit 1.
				SC0_DAT	I/O	MFP6	Smart Card 0 data pin.
				UART0_TXD	O	MFP7	UART0 data transmitter output pin.
				UART1_nCTS	I	MFP8	UART1 clear to Send input pin.
				I2C2_SCL	I/O	MFP9	I2C2 clock pin.
				BPWM0_CH1	I/O	MFP12	BPWM0 channel 1 output/capture input.
				EPWM0_CH4	I/O	MFP13	EPWM0 channel 4 output/capture input.
				DAC1_ST	I	MFP15	DAC1 external trigger input.
14	22	30	60	PA.0	I/O	MFP0	General purpose digital I/O pin.

33 Pin	48 Pin	64 Pin	128 Pin	Pin Name	Type	MFP	Description
	20*			SPIM_MOSI	I/O	MFP2	SPIM MOSI (Master Out, Slave In) pin.
				QSPI0_MOSI0	I/O	MFP3	Quad SPI0 MOSI0 (Master Out, Slave In) pin.
				SPI0_MOSI	I/O	MFP4	SPI0 MOSI (Master Out, Slave In) pin.
				SD1_DAT0	I/O	MFP5	SD/SDIO1 data line bit 0.
				SC0_CLK	O	MFP6	Smart Card 0 clock pin.
				UART0_RXD	I	MFP7	UART0 data receiver input pin.
				UART1_nRTS	O	MFP8	UART1 request to Send output pin.
				I2C2_SDA	I/O	MFP9	I2C2 data input/output pin.
				BPWM0_CH0	I/O	MFP12	BPWM0 channel 0 output/capture input.
				EPWM0_CH5	I/O	MFP13	EPWM0 channel 5 output/capture input.
				DAC0_ST	I	MFP15	DAC0 external trigger input.
15	23 21*	31	61	VDDIO	P	MFP0	Power supply for PA.0~PA.5.
			62	PE.14	I/O	MFP0	General purpose digital I/O pin.
				EBI_AD8	I/O	MFP2	EBI address/data bus bit 8.
				UART2_TXD	O	MFP3	UART2 data transmitter output pin.
				CAN0_TXD	O	MFP4	CAN0 bus transmitter output.
				SD1_nCD	I	MFP5	SD/SDIO1 card detect input pin
			63	PE.15	I/O	MFP0	General purpose digital I/O pin.
				EBI_AD9	I/O	MFP2	EBI address/data bus bit 9.
				UART2_RXD	I	MFP3	UART2 data receiver input pin.
				CAN0_RXD	I	MFP4	CAN0 bus receiver input.
16	24 22*	32	64	nRESET	I	MFP0	External reset input: active LOW, with an internal pull-up. Set this pin low reset to initial state. **Note:** It is recommended to use 10 kΩ pull-up resistor and 10 uF capacitor on nRESET pin.
17	25 23*	33	65	PF.0	I/O	MFP0	General purpose digital I/O pin.
				UART1_TXD	O	MFP2	UART1 data transmitter output pin.
				I2C1_SCL	I/O	MFP3	I2C1 clock pin.
				BPWM1_CH0	I/O	MFP12	BPWM1 channel 0 output/capture input.
				ICE_DAT	O	MFP14	Serial wired debugger data pin. **Note:** It is recommended to use 100 kΩ pull-up resistor on ICE_DAT pin.
18	26 24*	34	66	PF.1	I/O	MFP0	General purpose digital I/O pin.
				UART1_RXD	I	MFP2	UART1 data receiver input pin.
				I2C1_SDA	I/O	MFP3	I2C1 data input/output pin.

33 Pin	48 Pin	64 Pin	128 Pin	Pin Name	Type	MFP	Description
				BPWM1_CH1	I/O	MFP12	BPWM1 channel 1 output/capture input.
				ICE_CLK	I	MFP14	Serial wired debugger clock pin. **Note:** It is recommended to use 100 kΩ pull-up resistor on ICE_CLK pin.
			67	PD.9	I/O	MFP0	General purpose digital I/O pin.
				EBI_AD7	I/O	MFP2	EBI address/data bus bit 7.
				I2C2_SCL	I/O	MFP3	I2C2 clock pin.
				UART2_nCTS	I	MFP4	UART2 clear to Send input pin.
			68	PD.8	I/O	MFP0	General purpose digital I/O pin.
				EBI_AD6	I/O	MFP2	EBI address/data bus bit 6.
				I2C2_SDA	I/O	MFP3	I2C2 data input/output pin.
				UART2_nRTS	O	MFP4	UART2 request to Send output pin.
	27 25*	35	69	PC.5	I/O	MFP0	General purpose digital I/O pin.
				EBI_AD5	I/O	MFP2	EBI address/data bus bit 5.
				SPIM_D2	I/O	MFP3	SPIM data 2 pin for Quad Mode I/O.
				QSPI0_MISO1	I/O	MFP4	Quad SPI0 MISO1 (Master In, Slave Out) pin.
				UART2_TXD	O	MFP8	UART2 data transmitter output pin.
				I2C1_SCL	I/O	MFP9	I2C1 clock pin.
				CAN0_TXD	O	MFP10	CAN0 bus transmitter output.
				UART4_TXD	O	MFP11	UART4 data transmitter output pin.
				EPWM1_CH0	I/O	MFP12	EPWM1 channel 0 output/capture input.
	28 26*	36	70	PC.4	I/O	MFP0	General purpose digital I/O pin.
				EBI_AD4	I/O	MFP2	EBI address/data bus bit 4.
				SPIM_D3	I/O	MFP3	SPIM data 3 pin for Quad Mode I/O.
				QSPI0_MOSI1	I/O	MFP4	Quad SPI0 MOSI1 (Master Out, Slave In) pin.
				SC1_nCD	I	MFP5	Smart Card 1 card detect pin.
				I2S0_BCLK	O	MFP6	I2S0 bit clock output pin.
				SPI1_I2SMCLK	I/O	MFP7	SPI1 I2S master clock output pin
				UART2_RXD	I	MFP8	UART2 data receiver input pin.
				I2C1_SDA	I/O	MFP9	I2C1 data input/output pin.
				CAN0_RXD	I	MFP10	CAN0 bus receiver input.
				UART4_RXD	I	MFP11	UART4 data receiver input pin.
				EPWM1_CH1	I/O	MFP12	EPWM1 channel 1 output/capture input.
	29 27*	37	71	PC.3	I/O	MFP0	General purpose digital I/O pin.
				EBI_AD3	I/O	MFP2	EBI address/data bus bit 3.

33 Pin	48 Pin	64 Pin	128 Pin	Pin Name	Type	MFP	Description
				SPIM_SS	I/O	MFP3	SPIM slave select pin.
				QSPI0_SS	I/O	MFP4	Quad SPI0 slave select pin.
				SC1_PWR	O	MFP5	Smart Card 1 power pin.
				I2S0_MCLK	O	MFP6	I2S0 master clock output pin.
				SPI1_MISO	I/O	MFP7	SPI1 MISO (Master In, Slave Out) pin.
				UART2_nRTS	O	MFP8	UART2 request to Send output pin.
				I2C0_SMBAL	O	MFP9	I2C0 SMBus SMBALTER pin
				CAN1_TXD	O	MFP10	CAN1 bus transmitter output.
				UART3_TXD	O	MFP11	UART3 data transmitter output pin.
				EPWM1_CH2	I/O	MFP12	EPWM1 channel 2 output/capture input.
	30 28*	38	72	PC.2	I/O	MFP0	General purpose digital I/O pin.
				EBI_AD2	I/O	MFP2	EBI address/data bus bit 2.
				SPIM_CLK	I/O	MFP3	SPIM serial clock pin.
				QSPI0_CLK	I/O	MFP4	Quad SPI0 serial clock pin.
				SC1_RST	O	MFP5	Smart Card 1 reset pin.
				I2S0_DI	I	MFP6	I2S0 data input pin.
				SPI1_MOSI	I/O	MFP7	SPI1 MOSI (Master Out, Slave In) pin.
				UART2_nCTS	I	MFP8	UART2 clear to Send input pin.
				I2C0_SMBSUS	O	MFP9	I2C0 SMBus SMBSUS pin (PMBus CONTROL pin)
				CAN1_RXD	I	MFP10	CAN1 bus receiver input.
				UART3_RXD	I	MFP11	UART3 data receiver input pin.
				EPWM1_CH3	I/O	MFP12	EPWM1 channel 3 output/capture input.
19	31 29*	39	73	PC.1	I/O	MFP0	General purpose digital I/O pin.
				EBI_AD1	I/O	MFP2	EBI address/data bus bit 1.
				SPIM_MISO	I/O	MFP3	SPIM MISO (Master In, Slave Out) pin.
				QSPI0_MISO0	I/O	MFP4	Quad SPI0 MISO0 (Master In, Slave Out) pin.
				SC1_DAT	I/O	MFP5	Smart Card 1 data pin.
				I2S0_DO	O	MFP6	I2S0 data output pin.
				SPI1_CLK	I/O	MFP7	SPI1 serial clock pin.
				UART2_TXD	O	MFP8	UART2 data transmitter output pin.
				I2C0_SCL	I/O	MFP9	I2C0 clock pin.
				EPWM1_CH4	I/O	MFP12	EPWM1 channel 4 output/capture input.
				ACMP0_O	O	MFP14	Analog comparator 0 output pin.
20	32	40	74	PC.0	I/O	MFP0	General purpose digital I/O pin.

33 Pin	48 Pin	64 Pin	128 Pin	Pin Name	Type	MFP	Description
	30*			EBI_AD0	I/O	MFP2	EBI address/data bus bit 0.
				SPIM_MOSI	I/O	MFP3	SPIM MOSI (Master Out, Slave In) pin.
				QSPI0_MOSI0	I/O	MFP4	Quad SPI0 MOSI0 (Master Out, Slave In) pin.
				SC1_CLK	O	MFP5	Smart Card 1 clock pin.
				I2S0_LRCK	O	MFP6	I2S0 left right channel clock output pin.
				SPI1_SS	I/O	MFP7	SPI1 slave select pin.
				UART2_RXD	I	MFP8	UART2 data receiver input pin.
				I2C0_SDA	I/O	MFP9	I2C0 data input/output pin.
				EPWM1_CH5	I/O	MFP12	EPWM1 channel 5 output/capture input.
				ACMP1_O	O	MFP14	Analog comparator 1 output pin.
			75	VSS	P	MFP0	Ground pin for digital circuit.
			76	VDD	P	MFP0	Power supply for I/O ports and LDO source for internal PLL and digital circuit.
			77	PG.9	I/O	MFP0	General purpose digital I/O pin.
				EBI_AD0	I/O	MFP2	EBI address/data bus bit 0.
				SD1_DAT3	I/O	MFP3	SD/SDIO1 data line bit 3.
				SPIM_D2	I/O	MFP4	SPIM data 2 pin for Quad Mode I/O.
				BPWM0_CH5	I/O	MFP12	BPWM0 channel 5 output/capture input.
			78	PG.10	I/O	MFP0	General purpose digital I/O pin.
				EBI_AD1	I/O	MFP2	EBI address/data bus bit 1.
				SD1_DAT2	I/O	MFP3	SD/SDIO1 data line bit 2.
				SPIM_D3	I/O	MFP4	SPIM data 3 pin for Quad Mode I/O.
				BPWM0_CH4	I/O	MFP12	BPWM0 channel 4 output/capture input.
			79	PG.11	I/O	MFP0	General purpose digital I/O pin.
				EBI_AD2	I/O	MFP2	EBI address/data bus bit 2.
				SD1_DAT1	I/O	MFP3	SD/SDIO1 data line bit 1.
				SPIM_SS	I/O	MFP4	SPIM slave select pin.
				BPWM0_CH3	I/O	MFP12	BPWM0 channel 3 output/capture input.
			80	PG.12	I/O	MFP0	General purpose digital I/O pin.
				EBI_AD3	I/O	MFP2	EBI address/data bus bit 3.
				SD1_DAT0	I/O	MFP3	SD/SDIO1 data line bit 0.
				SPIM_CLK	I/O	MFP4	SPIM serial clock pin.
				BPWM0_CH2	I/O	MFP12	BPWM0 channel 2 output/capture input.
			81	PG.13	I/O	MFP0	General purpose digital I/O pin.

33 Pin	48 Pin	64 Pin	128 Pin	Pin Name	Type	MFP	Description
				EBI_AD4	I/O	MFP2	EBI address/data bus bit 4.
				SD1_CMD	I/O	MFP3	SD/SDIO1 command/response pin
				SPIM_MISO	I/O	MFP4	SPIM MISO (Master In, Slave Out) pin.
				BPWM0_CH1	I/O	MFP12	BPWM0 channel 1 output/capture input.
			82	PG.14	I/O	MFP0	General purpose digital I/O pin.
				EBI_AD5	I/O	MFP2	EBI address/data bus bit 5.
				SD1_CLK	O	MFP3	SD/SDIO1 clock output pin
				SPIM_MOSI	I/O	MFP4	SPIM MOSI (Master Out, Slave In) pin.
				BPWM0_CH0	I/O	MFP12	BPWM0 channel 0 output/capture input.
			83	PG.15	I/O	MFP0	General purpose digital I/O pin.
				SD1_nCD	I	MFP3	SD/SDIO1 card detect input pin
				CLKO	O	MFP14	Clock Out
				EADC0_ST	I	MFP15	EADC0 external trigger input.
			84	PD.13	I/O	MFP0	General purpose digital I/O pin.
				EBI_AD10	I/O	MFP2	EBI address/data bus bit 10.
				SD0_nCD	I	MFP3	SD/SDIO0 card detect input pin
				SPI0_I2SMCLK	I/O	MFP4	SPI0 I2S master clock output pin
				SPI1_I2SMCLK	I/O	MFP5	SPI1 I2S master clock output pin
				SC2_nCD	I	MFP7	Smart Card 2 card detect pin.
21	33 31*		85	PA.12	I/O	MFP0	General purpose digital I/O pin.
				I2S0_BCLK	O	MFP2	I2S0 bit clock output pin.
				UART4_TXD	O	MFP3	UART4 data transmitter output pin.
				I2C1_SCL	I/O	MFP4	I2C1 clock pin.
				SPI2_SS	I/O	MFP5	SPI2 slave select pin.
				CAN0_TXD	O	MFP6	CAN0 bus transmitter output.
				SC2_PWR	O	MFP7	Smart Card 2 power pin.
				BPWM1_CH2	I/O	MFP11	BPWM1 channel 2 output/capture input.
				QEI1_INDEX	I	MFP12	Quadrature encoder 1 index input
				USB_VBUS	P	MFP14	Power supply from USB host or HUB.
22	34 32*		86	PA.13	I/O	MFP0	General purpose digital I/O pin.
				I2S0_MCLK	O	MFP2	I2S0 master clock output pin.
				UART4_RXD	I	MFP3	UART4 data receiver input pin.
				I2C1_SDA	I/O	MFP4	I2C1 data input/output pin.
				SPI2_CLK	I/O	MFP5	SPI2 serial clock pin.

33 Pin	48 Pin	64 Pin	128 Pin	Pin Name	Type	MFP	Description
				CAN0_RXD	I	MFP6	CAN0 bus receiver input.
				SC2_RST	O	MFP7	Smart Card 2 reset pin.
				BPWM1_CH3	I/O	MFP11	BPWM1 channel 3 output/capture input.
				QEI1_A	I	MFP12	Quadrature encoder 1 phase A input
				USB_D-	A	MFP14	USB differential signal D-.
23	35 33*		87	PA.14	I/O	MFP0	General purpose digital I/O pin.
				I2S0_DI	I	MFP2	I2S0 data input pin.
				UART0_TXD	O	MFP3	UART0 data transmitter output pin.
				SPI2_MISO	I/O	MFP5	SPI2 MISO (Master In, Slave Out) pin.
				I2C2_SCL	I/O	MFP6	I2C2 clock pin.
				SC2_DAT	I/O	MFP7	Smart Card 2 data pin.
				BPWM1_CH4	I/O	MFP11	BPWM1 channel 4 output/capture input.
				QEI1_B	I	MFP12	Quadrature encoder 1 phase B input
				USB_D+	A	MFP14	USB differential signal D+.
24	36 34*		88	PA.15	I/O	MFP0	General purpose digital I/O pin.
				I2S0_DO	O	MFP2	I2S0 data output pin.
				UART0_RXD	I	MFP3	UART0 data receiver input pin.
				SPI2_MOSI	I/O	MFP5	SPI2 MOSI (Master Out, Slave In) pin.
				I2C2_SDA	I/O	MFP6	I2C2 data input/output pin.
				SC2_CLK	O	MFP7	Smart Card 2 clock pin.
				BPWM1_CH5	I/O	MFP11	BPWM1 channel 5 output/capture input.
				EPWM0_SYNC_IN	I	MFP12	EPWM0 counter synchronous trigger input pin.
				USB_OTG_ID	I	MFP14	USB_ identification.
		41	89	HSUSB_VRES	A	MFP0	HSUSB module reference resister
		42	90	HSUSB_VDD33	P	MFP0	Power supply for HSUSB VDD33
		43	91	HSUSB_VBUS	P	MFP0	HSUSB Power supply from USB host or HUB.
		44	92	HSUSB_D-	A	MFP0	HSUSB differential signal D-.
		45	93	HSUSB_VSS	P	MFP0	Ground pin for HSUSB.
		46	94	HSUSB_D+	A	MFP0	HSUSB differential signal D+.
		47	95	HSUSB_VDD12_CAP	A	MFP0	HSUSB Internal power regulator output 1.2V decoupling pin. Note: This pin needs to be connected with a 1uF capacitor.
		48	96	HSUSB_ID	I	MFP0	HSUSB identification.
			97	PE.7	I/O	MFP0	General purpose digital I/O pin.
				SD0_CMD	I/O	MFP3	SD/SDIO0 command/response pin

33 Pin	48 Pin	64 Pin	128 Pin	Pin Name	Type	MFP	Description
				SPIM_D2	I/O	MFP4	SPIM data 2 pin for Quad Mode I/O.
				UART5_TXD	O	MFP8	UART5 data transmitter output pin.
				CAN1_TXD	O	MFP9	CAN1 bus transmitter output.
				QEI1_INDEX	I	MFP11	Quadrature encoder 1 index input
				EPWM0_CH0	I/O	MFP12	EPWM0 channel 0 output/capture input.
				BPWM0_CH5	I/O	MFP13	BPWM0 channel 5 output/capture input.
			98	PE.6	I/O	MFP0	General purpose digital I/O pin.
				SD0_CLK	O	MFP3	SD/SDIO0 clock output pin
				SPIM_D3	I/O	MFP4	SPIM data 3 pin for Quad Mode I/O.
				SPI3_I2SMCLK	I/O	MFP5	SPI3 I2S master clock output pin
				SC0_nCD	I	MFP6	Smart Card 0 card detect pin.
				USCI0_CTL0	I/O	MFP7	USCI0 control 0 pin.
				UART5_RXD	I	MFP8	UART5 data receiver input pin.
				CAN1_RXD	I	MFP9	CAN1 bus receiver input.
				QEI1_A	I	MFP11	Quadrature encoder 1 phase A input
				EPWM0_CH1	I/O	MFP12	EPWM0 channel 1 output/capture input.
				BPWM0_CH4	I/O	MFP13	BPWM0 channel 4 output/capture input.
			99	PE.5	I/O	MFP0	General purpose digital I/O pin.
				EBI_nRD	O	MFP2	EBI read enable output pin.
				SD0_DAT3	I/O	MFP3	SD/SDIO0 data line bit 3.
				SPIM_SS	I/O	MFP4	SPIM slave select pin.
				SPI3_SS	I/O	MFP5	SPI3 slave select pin.
				SC0_PWR	O	MFP6	Smart Card 0 power pin.
				USCI0_CTL1	I/O	MFP7	USCI0 control 1 pin.
				QEI1_B	I	MFP11	Quadrature encoder 1 phase B input
				EPWM0_CH2	I/O	MFP12	EPWM0 channel 2 output/capture input.
				BPWM0_CH3	I/O	MFP13	BPWM0 channel 3 output/capture input.
			100	PE.4	I/O	MFP0	General purpose digital I/O pin.
				EBI_nWR	O	MFP2	EBI write enable output pin.
				SD0_DAT2	I/O	MFP3	SD/SDIO0 data line bit 2.
				SPIM_CLK	I/O	MFP4	SPIM serial clock pin.
				SPI3_CLK	I/O	MFP5	SPI3 serial clock pin.
				SC0_RST	O	MFP6	Smart Card 0 reset pin.
				USCI0_DAT1	I/O	MFP7	USCI0 data 1 pin.

33 Pin	48 Pin	64 Pin	128 Pin	Pin Name	Type	MFP	Description
				QEI0_INDEX	I	MFP11	Quadrature encoder 0 index input
				EPWM0_CH3	I/O	MFP12	EPWM0 channel 3 output/capture input.
				BPWM0_CH2	I/O	MFP13	BPWM0 channel 2 output/capture input.
			101	PE.3	I/O	MFP0	General purpose digital I/O pin.
				EBI_MCLK	O	MFP2	EBI external clock output pin.
				SD0_DAT1	I/O	MFP3	SD/SDIO0 data line bit 1.
				SPIM_MISO	I/O	MFP4	SPIM MISO (Master In, Slave Out) pin.
				SPI3_MISO	I/O	MFP5	SPI3 MISO (Master In, Slave Out) pin.
				SC0_DAT	I/O	MFP6	Smart Card 0 data pin.
				USCI0_DAT0	I/O	MFP7	USCI0 data 0 pin.
				QEI0_A	I	MFP11	Quadrature encoder 0 phase A input
				EPWM0_CH4	I/O	MFP12	EPWM0 channel 4 output/capture input.
				BPWM0_CH1	I/O	MFP13	BPWM0 channel 1 output/capture input.
			102	PE.2	I/O	MFP0	General purpose digital I/O pin.
				EBI_ALE	O	MFP2	EBI address latch enable output pin.
				SD0_DAT0	I/O	MFP3	SD/SDIO0 data line bit 0.
				SPIM_MOSI	I/O	MFP4	SPIM MOSI (Master Out, Slave In) pin.
				SPI3_MOSI	I/O	MFP5	SPI3 MOSI (Master Out, Slave In) pin.
				SC0_CLK	O	MFP6	Smart Card 0 clock pin.
				USCI0_CLK	I/O	MFP7	USCI0 clock pin.
				QEI0_B	I	MFP11	Quadrature encoder 0 phase B input
				EPWM0_CH5	I/O	MFP12	EPWM0 channel 5 output/capture input.
				BPWM0_CH0	I/O	MFP13	BPWM0 channel 0 output/capture input.
			103	VSS	P	MFP0	Ground pin for digital circuit.
			104	VDD	P	MFP0	Power supply for I/O ports and LDO source for internal PLL and digital circuit.
			105	PE.1	I/O	MFP0	General purpose digital I/O pin.
				EBI_AD10	I/O	MFP2	EBI address/data bus bit 10.
				QSPI0_MISO0	I/O	MFP3	Quad SPI0 MISO0 (Master In, Slave Out) pin.
				SC2_DAT	I/O	MFP4	Smart Card 2 data pin.
				I2S0_BCLK	O	MFP5	I2S0 bit clock output pin.
				SPI1_MISO	I/O	MFP6	SPI1 MISO (Master In, Slave Out) pin.
				UART3_TXD	O	MFP7	UART3 data transmitter output pin.
				I2C1_SCL	I/O	MFP8	I2C1 clock pin.

33 Pin	48 Pin	64 Pin	128 Pin	Pin Name	Type	MFP	Description
				UART4_nCTS	I	MFP9	UART4 clear to Send input pin.
			106	PE.0	I/O	MFP0	General purpose digital I/O pin.
				EBI_AD11	I/O	MFP2	EBI address/data bus bit 11.
				QSPI0_MOSI0	I/O	MFP3	Quad SPI0 MOSI0 (Master Out, Slave In) pin.
				SC2_CLK	O	MFP4	Smart Card 2 clock pin.
				I2S0_MCLK	O	MFP5	I2S0 master clock output pin.
				SPI1_MOSI	I/O	MFP6	SPI1 MOSI (Master Out, Slave In) pin.
				UART3_RXD	I	MFP7	UART3 data receiver input pin.
				I2C1_SDA	I/O	MFP8	I2C1 data input/output pin.
				UART4_nRTS	O	MFP9	UART4 request to Send output pin.
			107	PH.8	I/O	MFP0	General purpose digital I/O pin.
				EBI_AD12	I/O	MFP2	EBI address/data bus bit 12.
				QSPI0_CLK	I/O	MFP3	Quad SPI0 serial clock pin.
				SC2_PWR	O	MFP4	Smart Card 2 power pin.
				I2S0_DI	I	MFP5	I2S0 data input pin.
				SPI1_CLK	I/O	MFP6	SPI1 serial clock pin.
				UART3_nRTS	O	MFP7	UART3 request to Send output pin.
				I2C1_SMBAL	O	MFP8	I2C1 SMBus SMBALTER pin
				I2C2_SCL	I/O	MFP9	I2C2 clock pin.
				UART1_TXD	O	MFP10	UART1 data transmitter output pin.
			108	PH.9	I/O	MFP0	General purpose digital I/O pin.
				EBI_AD13	I/O	MFP2	EBI address/data bus bit 13.
				QSPI0_SS	I/O	MFP3	Quad SPI0 slave select pin.
				SC2_RST	O	MFP4	Smart Card 2 reset pin.
				I2S0_DO	O	MFP5	I2S0 data output pin.
				SPI1_SS	I/O	MFP6	SPI1 slave select pin.
				UART3_nCTS	I	MFP7	UART3 clear to Send input pin.
				I2C1_SMBSUS	O	MFP8	I2C1 SMBus SMBSUS pin (PMBus CONTROL pin)
				I2C2_SDA	I/O	MFP9	I2C2 data input/output pin.
				UART1_RXD	I	MFP10	UART1 data receiver input pin.
			109	PH.10	I/O	MFP0	General purpose digital I/O pin.
				EBI_AD14	I/O	MFP2	EBI address/data bus bit 14.
				QSPI0_MISO1	I/O	MFP3	Quad SPI0 MISO1 (Master In, Slave Out) pin.
				SC2_nCD	I	MFP4	Smart Card 2 card detect pin.

33 Pin	48 Pin	64 Pin	128 Pin	Pin Name	Type	MFP	Description
				I2S0_LRCK	O	MFP5	I2S0 left right channel clock output pin.
				SPI1_I2SMCLK	I/O	MFP6	SPI1 I2S master clock output pin
				UART4_TXD	O	MFP7	UART4 data transmitter output pin.
				UART0_TXD	O	MFP8	UART0 data transmitter output pin.
			110	PH.11	I/O	MFP0	General purpose digital I/O pin.
				EBI_AD15	I/O	MFP2	EBI address/data bus bit 15.
				QSPI0_MOSI1	I/O	MFP3	Quad SPI0 MOSI1 (Master Out, Slave In) pin.
				UART4_RXD	I	MFP7	UART4 data receiver input pin.
				UART0_RXD	I	MFP8	UART0 data receiver input pin.
				EPWM0_CH5	I/O	MFP11	EPWM0 channel 5 output/capture input.
			111	PD.14	I/O	MFP0	General purpose digital I/O pin.
				EBI_nCS0	O	MFP2	EBI chip select 0 output pin.
				SPI3_I2SMCLK	I/O	MFP3	SPI3 I2S master clock output pin
				SC1_nCD	I	MFP4	Smart Card 1 card detect pin.
				EPWM0_CH4	I/O	MFP11	EPWM0 channel 4 output/capture input.
25	37 35*	49	112	VSS	P	MFP0	Ground pin for digital circuit.
26	38 36*	50	113	LDO_CAP	A	MFP0	LDO output pin. **Note:** This pin needs to be connected with an external capacitor.
27	39 37*	51	114	VDD	P	MFP0	Power supply for I/O ports and LDO source for internal PLL and digital circuit.
	40	52	115	PC.14	I/O	MFP0	General purpose digital I/O pin.
				EBI_AD11	I/O	MFP2	EBI address/data bus bit 11.
				SC1_nCD	I	MFP3	Smart Card 1 card detect pin.
				SPI0_I2SMCLK	I/O	MFP4	SPI0 I2S master clock output pin
				USCI0_CTL0	I/O	MFP5	USCI0 control 0 pin.
				QSPI0_CLK	I/O	MFP6	Quad SPI0 serial clock pin.
				EPWM0_SYNC_IN	I	MFP11	EPWM0 counter synchronous trigger input pin.
				TM1	I/O	MFP13	Timer1 event counter input/toggle output pin.
				USB_VBUS_ST	I	MFP14	USB external V_{BUS} regulator status pin.
				HSUSB_VBUS_ST	I	MFP15	HSUSB external V_{BUS} regulator status pin.
28	41 38*	53	116	PB.15	I/O	MFP0	General purpose digital I/O pin.
				EADC0_CH15	A	MFP1	EADC0 channel 15 analog input.
				EBI_AD12	I/O	MFP2	EBI address/data bus bit 12.

33 Pin	48 Pin	64 Pin	128 Pin	Pin Name	Type	MFP	Description
				SC1_PWR	O	MFP3	Smart Card 1 power pin.
				SPI0_SS	I/O	MFP4	SPI0 slave select pin.
				USCI0_CTL1	I/O	MFP5	USCI0 control 1 pin.
				UART0_nCTS	I	MFP6	UART0 clear to Send input pin.
				UART3_TXD	O	MFP7	UART3 data transmitter output pin.
				I2C2_SMBAL	O	MFP8	I2C2 SMBus SMBALTER pin
				EPWM1_CH0	I/O	MFP11	EPWM1 channel 0 output/capture input.
				TM0_EXT	I/O	MFP13	Timer0 external capture input/toggle output pin.
				USB_VBUS_EN	O	MFP14	USB external V_{BUS} regulator enable pin.
				HSUSB_VBUS_EN	O	MFP15	HSUSB external V_{BUS} regulator enable pin.
29	42 39*	54	117	PB.14	I/O	MFP0	General purpose digital I/O pin.
				EADC0_CH14	A	MFP1	EADC0 channel 14 analog input.
				EBI_AD13	I/O	MFP2	EBI address/data bus bit 13.
				SC1_RST	O	MFP3	Smart Card 1 reset pin.
				SPI0_CLK	I/O	MFP4	SPI0 serial clock pin.
				USCI0_DAT1	I/O	MFP5	USCI0 data 1 pin.
				UART0_nRTS	O	MFP6	UART0 request to Send output pin.
				UART3_RXD	I	MFP7	UART3 data receiver input pin.
				I2C2_SMBSUS	O	MFP8	I2C2 SMBus SMBSUS pin (PMBus CONTROL pin)
				EPWM1_CH1	I/O	MFP11	EPWM1 channel 1 output/capture input.
				TM1_EXT	I/O	MFP13	Timer1 external capture input/toggle output pin.
				CLKO	O	MFP14	Clock Out
30	43 40*	55	118	PB.13	I/O	MFP0	General purpose digital I/O pin.
				EADC0_CH13	A	MFP1	EADC0 channel 13 analog input.
				DAC1_OUT	A	MFP1	DAC1 channel analog output.
				ACMP0_P3	A	MFP1	Analog comparator 0 positive input 3 pin.
				ACMP1_P3	A	MFP1	Analog comparator 1 positive input 3 pin.
				EBI_AD14	I/O	MFP2	EBI address/data bus bit 14.
				SC1_DAT	I/O	MFP3	Smart Card 1 data pin.
				SPI0_MISO	I/O	MFP4	SPI0 MISO (Master In, Slave Out) pin.
				USCI0_DAT0	I/O	MFP5	USCI0 data 0 pin.
				UART0_TXD	O	MFP6	UART0 data transmitter output pin.
				UART3_nRTS	O	MFP7	UART3 request to Send output pin.
				I2C2_SCL	I/O	MFP8	I2C2 clock pin.

33 Pin	48 Pin	64 Pin	128 Pin	Pin Name	Type	MFP	Description
				EPWM1_CH2	I/O	MFP11	EPWM1 channel 2 output/capture input.
				TM2_EXT	I/O	MFP13	Timer2 external capture input/toggle output pin.
31	44 41*	56	119	PB.12	I/O	MFP0	General purpose digital I/O pin.
				EADC0_CH12	A	MFP1	EADC0 channel 12 analog input.
				DAC0_OUT	A	MFP1	DAC0 channel analog output.
				ACMP0_P2	A	MFP1	Analog comparator 0 positive input 2 pin.
				ACMP1_P2	A	MFP1	Analog comparator 1 positive input 2 pin.
				EBI_AD15	I/O	MFP2	EBI address/data bus bit 15.
				SC1_CLK	O	MFP3	Smart Card 1 clock pin.
				SPI0_MOSI	I/O	MFP4	SPI0 MOSI (Master Out, Slave In) pin.
				USCI0_CLK	I/O	MFP5	USCI0 clock pin.
				UART0_RXD	I	MFP6	UART0 data receiver input pin.
				UART3_nCTS	I	MFP7	UART3 clear to Send input pin.
				I2C2_SDA	I/O	MFP8	I2C2 data input/output pin.
				SD0_nCD	I	MFP9	SD/SDIO0 card detect input pin
				EPWM1_CH3	I/O	MFP11	EPWM1 channel 3 output/capture input.
				TM3_EXT	I/O	MFP13	Timer3 external capture input/toggle output pin.
32	45 42*	57	120	AVDD	P	MFP0	Power supply for internal analog circuit.
	43*	58	121	VREF	A	MFP0	ADC reference voltage input. Note: This pin needs to be connected with a 1uF capacitor.
	46 44*	59	122	AVSS	P	MFP0	Ground pin for analog circuit.
	45*	60	123	PB.11	I/O	MFP0	General purpose digital I/O pin.
				EADC0_CH11	A	MFP1	EADC0 channel 11 analog input.
				EBI_ADR16	O	MFP2	EBI address bus bit 16.
				UART0_nCTS	I	MFP5	UART0 clear to Send input pin.
				UART4_TXD	O	MFP6	UART4 data transmitter output pin.
				I2C1_SCL	I/O	MFP7	I2C1 clock pin.
				CAN0_TXD	O	MFP8	CAN0 bus transmitter output.
				SPI0_I2SMCLK	I/O	MFP9	SPI0 I2S master clock output pin
				BPWM1_CH0	I/O	MFP10	BPWM1 channel 0 output/capture input.
				SPI3_CLK	I/O	MFP11	SPI3 serial clock pin.
				HSUSB_VBUS_ST	I	MFP14	HSUSB external V_{BUS} regulator status pin.
	46*	61	124	PB.10	I/O	MFP0	General purpose digital I/O pin.

33 Pin	48 Pin	64 Pin	128 Pin	Pin Name	Type	MFP	Description
				EADC0_CH10	A	MFP1	EADC0 channel 10 analog input.
				EBI_ADR17	O	MFP2	EBI address bus bit 17.
				USCI1_CTL0	I/O	MFP4	USCI1 control 0 pin.
				UART0_nRTS	O	MFP5	UART0 request to Send output pin.
				UART4_RXD	I	MFP6	UART4 data receiver input pin.
				I2C1_SDA	I/O	MFP7	I2C1 data input/output pin.
				CAN0_RXD	I	MFP8	CAN0 bus receiver input.
				BPWM1_CH1	I/O	MFP10	BPWM1 channel 1 output/capture input.
				SPI3_SS	I/O	MFP11	SPI3 slave select pin.
				HSUSB_VBUS_EN	O	MFP14	HSUSB external V_{BUS} regulator enable pin.
	47*	62	125	PB.9	I/O	MFP0	General purpose digital I/O pin.
				EADC0_CH9	A	MFP1	EADC0 channel 9 analog input.
				EBI_ADR18	O	MFP2	EBI address bus bit 18.
				USCI1_CTL1	I/O	MFP4	USCI1 control 1 pin.
				UART0_TXD	O	MFP5	UART0 data transmitter output pin.
				UART1_nCTS	I	MFP6	UART1 clear to Send input pin.
				I2C1_SMBAL	O	MFP7	I2C1 SMBus SMBALTER pin
				BPWM1_CH2	I/O	MFP10	BPWM1 channel 2 output/capture input.
				SPI3_MISO	I/O	MFP11	SPI3 MISO (Master In, Slave Out) pin.
				INT7	I	MFP13	External interrupt 7 input pin.
	48*	63	126	PB.8	I/O	MFP0	General purpose digital I/O pin.
				EADC0_CH8	A	MFP1	EADC0 channel 8 analog input.
				EBI_ADR19	O	MFP2	EBI address bus bit 19.
				USCI1_CLK	I/O	MFP4	USCI1 clock pin.
				UART0_RXD	I	MFP5	UART0 data receiver input pin.
				UART1_nRTS	O	MFP6	UART1 request to Send output pin.
				I2C1_SMBSUS	O	MFP7	I2C1 SMBus SMBSUS pin (PMBus CONTROL pin)
				BPWM1_CH3	I/O	MFP10	BPWM1 channel 3 output/capture input.
				SPI3_MOSI	I/O	MFP11	SPI3 MOSI (Master Out, Slave In) pin.
				INT6	I	MFP13	External interrupt 6 input pin.
	47	64	127	PB.7	I/O	MFP0	General purpose digital I/O pin.
				EADC0_CH7	A	MFP1	EADC0 channel 7 analog input.
				EBI_nWRL	O	MFP2	EBI low byte write enable output pin.
				USCI1_DAT0	I/O	MFP4	USCI1 data 0 pin.

33 Pin	48 Pin	64 Pin	128 Pin	Pin Name	Type	MFP	Description
				CAN1_TXD	O	MFP5	CAN1 bus transmitter output.
				UART1_TXD	O	MFP6	UART1 data transmitter output pin.
				SD1_CMD	I/O	MFP7	SD/SDIO1 command/response pin
				EBI_nCS0	O	MFP8	EBI chip select 0 output pin.
				BPWM1_CH4	I/O	MFP10	BPWM1 channel 4 output/capture input.
				EPWM1_BRAKE0	I	MFP11	EPWM1 Brake 0 input pin.
				EPWM1_CH4	I/O	MFP12	EPWM1 channel 4 output/capture input.
				INT5	I	MFP13	External interrupt 5 input pin.
				USB_VBUS_ST	I	MFP14	USB external V_{BUS} regulator status pin.
				ACMP0_O	O	MFP15	Analog comparator 0 output pin.
	48	1	128	PB.6	I/O	MFP0	General purpose digital I/O pin.
				EADC0_CH6	A	MFP1	EADC0 channel 6 analog input.
				EBI_nWRH	O	MFP2	EBI high byte write enable output pin
				USCI1_DAT1	I/O	MFP4	USCI1 data 1 pin.
				CAN1_RXD	I	MFP5	CAN1 bus receiver input.
				UART1_RXD	I	MFP6	UART1 data receiver input pin.
				SD1_CLK	O	MFP7	SD/SDIO1 clock output pin
				EBI_nCS1	O	MFP8	EBI chip select 1 output pin.
				BPWM1_CH5	I/O	MFP10	BPWM1 channel 5 output/capture input.
				EPWM1_BRAKE1	I	MFP11	EPWM1 Brake 1 input pin.
				EPWM1_CH5	I/O	MFP12	EPWM1 channel 5 output/capture input.
				INT4	I	MFP13	External interrupt 4 input pin.
				USB_VBUS_EN	O	MFP14	USB external V_{BUS} regulator enable pin.
				ACMP1_O	O	MFP15	Analog comparator 1 output pin.
Note *: QFN-48 pin description.							

4.2.6 M487 Series Pin Description

Note: PA.15 MFP can only be as USB_OTG_ID when enable full-Speed USB.

64 Pin	128 Pin	144 Pin	Pin Name	Type	MFP	Description
2	1	1	PB.5	I/O	MFP0	General purpose digital I/O pin.
			EADC0_CH5	A	MFP1	EADC0 channel 5 analog input.
			ACMP1_N	A	MFP1	Analog comparator 1 negative input pin.
			EBI_ADR0	O	MFP2	EBI address bus bit 0.
			SD0_DAT3	I/O	MFP3	SD/SDIO0 data line bit 3.
			EMAC_RMII_REFCLK	I	MFP4	EMAC RMII reference clock input pin.
			SPI1_MISO	I/O	MFP5	SPI1 MISO (Master In, Slave Out) pin.
			I^2C0_SCL	I/O	MFP6	I^2C0 clock pin.
			UART5_TXD	O	MFP7	UART5 data transmitter output pin.
			USCI1_CTL0	I/O	MFP8	USCI1 control 0 pin.
			SC0_CLK	O	MFP9	Smart Card 0 clock pin.
			I^2S0_BCLK	O	MFP10	I^2S0 bit clock output pin.
			EPWM0_CH0	I/O	MFP11	EPWM0 channel 0 output/capture input.
			TM0	I/O	MFP14	Timer0 event counter input/toggle output pin.
			INT0	I	MFP15	External interrupt 0 input pin.
3	2	2	PB.4	I/O	MFP0	General purpose digital I/O pin.
			EADC0_CH4	A	MFP1	EADC0 channel 4 analog input.
			ACMP1_P1	A	MFP1	Analog comparator 1 positive input 1 pin.
			EBI_ADR1	O	MFP2	EBI address bus bit 1.
			SD0_DAT2	I/O	MFP3	SD/SDIO0 data line bit 2.
			EMAC_RMII_RXD0	I	MFP4	EMAC RMII Receive Data bus bit 0.
			SPI1_MOSI	I/O	MFP5	SPI1 MOSI (Master Out, Slave In) pin.
			I^2C0_SDA	I/O	MFP6	I^2C0 data input/output pin.
			UART5_RXD	I	MFP7	UART5 data receiver input pin.
			USCI1_CTL1	I/O	MFP8	USCI1 control 1 pin.
			SC0_DAT	I/O	MFP9	Smart Card 0 data pin.
			I^2S0_MCLK	O	MFP10	I^2S0 master clock output pin.
			EPWM0_CH1	I/O	MFP11	EPWM0 channel 1 output/capture input.
			TM1	I/O	MFP14	Timer1 event counter input/toggle output pin.
			INT1	I	MFP15	External interrupt 1 input pin.
4	3	3	PB.3	I/O	MFP0	General purpose digital I/O pin.
			EADC0_CH3	A	MFP1	EADC0 channel 3 analog input.

64 Pin	128 Pin	144 Pin	Pin Name	Type	MFP	Description
			ACMP0_N	A	MFP1	Analog comparator 0 negative input pin.
			EBI_ADR2	O	MFP2	EBI address bus bit 2.
			SD0_DAT1	I/O	MFP3	SD/SDIO0 data line bit 1.
			EMAC_RMII_RXD1	I	MFP4	EMAC RMII Receive Data bus bit 1.
			SPI1_CLK	I/O	MFP5	SPI1 serial clock pin.
			UART1_TXD	O	MFP6	UART1 data transmitter output pin.
			UART5_nRTS	O	MFP7	UART5 request to Send output pin.
			USCI1_DAT1	I/O	MFP8	USCI1 data 1 pin.
			SC0_RST	O	MFP9	Smart Card 0 reset pin.
			I^2S0_DI	I	MFP10	I^2S0 data input pin.
			EPWM0_CH2	I/O	MFP11	EPWM0 channel 2 output/capture input.
			TM2	I/O	MFP14	Timer2 event counter input/toggle output pin.
			INT2	I	MFP15	External interrupt 2 input pin.
5	4	4	PB.2	I/O	MFP0	General purpose digital I/O pin.
			EADC0_CH2	A	MFP1	EADC0 channel 2 analog input.
			ACMP0_P1	A	MFP1	Analog comparator 0 positive input 1 pin.
			OPA0_O	A	MFP1	Operational amplifier 0 output pin.
			EBI_ADR3	O	MFP2	EBI address bus bit 3.
			SD0_DAT0	I/O	MFP3	SD/SDIO0 data line bit 0.
			EMAC_RMII_CRSDV	I	MFP4	EMAC RMII Carrier Sense/Receive Data input pin.
			SPI1_SS	I/O	MFP5	SPI1 slave select pin.
			UART1_RXD	I	MFP6	UART1 data receiver input pin.
			UART5_nCTS	I	MFP7	UART5 clear to Send input pin.
			USCI1_DAT0	I/O	MFP8	USCI1 data 0 pin.
			SC0_PWR	O	MFP9	Smart Card 0 power pin.
			I^2S0_DO	O	MFP10	I^2S0 data output pin.
			EPWM0_CH3	I/O	MFP11	EPWM0 channel 3 output/capture input.
			TM3	I/O	MFP14	Timer3 event counter input/toggle output pin.
			INT3	I	MFP15	External interrupt 3 input pin.
	5	5	PC.12	I/O	MFP0	General purpose digital I/O pin.
			EBI_ADR4	O	MFP2	EBI address bus bit 4.
			UART0_TXD	O	MFP3	UART0 data transmitter output pin.
			I^2C0_SCL	I/O	MFP4	I^2C0 clock pin.
			SPI3_MISO	I/O	MFP6	SPI3 MISO (Master In, Slave Out) pin.

64 Pin	128 Pin	144 Pin	Pin Name	Type	MFP	Description
			SC0_nCD	I	MFP9	Smart Card 0 card detect pin.
			ECAP1_IC2	I	MFP11	Enhanced capture unit 1 input 2 pin.
			EPWM1_CH0	I/O	MFP12	EPWM1 channel 0 output/capture input.
			ACMP0_O	O	MFP14	Analog comparator 0 output pin.
	6	6	PC.11	I/O	MFP0	General purpose digital I/O pin.
			EBI_ADR5	O	MFP2	EBI address bus bit 5.
			UART0_RXD	I	MFP3	UART0 data receiver input pin.
			I^2C0_SDA	I/O	MFP4	I^2C0 data input/output pin.
			SPI3_MOSI	I/O	MFP6	SPI3 MOSI (Master Out, Slave In) pin.
			ECAP1_IC1	I	MFP11	Enhanced capture unit 1 input 1 pin.
			EPWM1_CH1	I/O	MFP12	EPWM1 channel 1 output/capture input.
			ACMP1_O	O	MFP14	Analog comparator 1 output pin.
	7	7	PC.10	I/O	MFP0	General purpose digital I/O pin.
			EBI_ADR6	O	MFP2	EBI address bus bit 6.
			SPI3_CLK	I/O	MFP6	SPI3 serial clock pin.
			UART3_TXD	O	MFP7	UART3 data transmitter output pin.
			CAN1_TXD	O	MFP9	CAN1 bus transmitter output.
			ECAP1_IC0	I	MFP11	Enhanced capture unit 1 input 0 pin.
			EPWM1_CH2	I/O	MFP12	EPWM1 channel 2 output/capture input.
	8	8	PC.9	I/O	MFP0	General purpose digital I/O pin.
			EBI_ADR7	O	MFP2	EBI address bus bit 7.
			SPI3_SS	I/O	MFP6	SPI3 slave select pin.
			UART3_RXD	I	MFP7	UART3 data receiver input pin.
			CAN1_RXD	I	MFP9	CAN1 bus receiver input.
			EPWM1_CH3	I/O	MFP12	EPWM1 channel 3 output/capture input.
6	9	9	PB.1	I/O	MFP0	General purpose digital I/O pin.
			EADC0_CH1	A	MFP1	EADC0 channel 1 analog input.
			OPA0_N	A	MFP1	Operational amplifier 0 negative input pin.
			EBI_ADR8	O	MFP2	EBI address bus bit 8.
			SD0_CLK	O	MFP3	SD/SDIO0 clock output pin
			EMAC_RMII_RXERR	I	MFP4	EMAC RMII Receive Data Error input pin.
			SPI1_I2SMCLK	I/O	MFP5	SPI1 I^2S master clock output pin
			SPI3_I2SMCLK	I/O	MFP6	SPI3 I^2S master clock output pin
			UART2_TXD	O	MFP7	UART2 data transmitter output pin.

64 Pin	128 Pin	144 Pin	Pin Name	Type	MFP	Description
			USCI1_CLK	I/O	MFP8	USCI1 clock pin.
			I^2C1_SCL	I/O	MFP9	I^2C1 clock pin.
			I^2S0_LRCK	O	MFP10	I^2S0 left right channel clock output pin.
			EPWM0_CH4	I/O	MFP11	EPWM0 channel 4 output/capture input.
			EPWM1_CH4	I/O	MFP12	EPWM1 channel 4 output/capture input.
			EPWM0_BRAKE0	I	MFP13	EPWM0 Brake 0 input pin.
7	10	10	PB.0	I/O	MFP0	General purpose digital I/O pin.
			EADC0_CH0	A	MFP1	EADC0 channel 0 analog input.
			OPA0_P	A	MFP1	Operational amplifier 0 positive input pin.
			EBI_ADR9	O	MFP2	EBI address bus bit 9.
			SD0_CMD	I/O	MFP3	SD/SDIO0 command/response pin
			UART2_RXD	I	MFP7	UART2 data receiver input pin.
			SPI0_I2SMCLK	I/O	MFP8	SPI0 I^2S master clock output pin
			I^2C1_SDA	I/O	MFP9	I^2C1 data input/output pin.
			EPWM0_CH5	I/O	MFP11	EPWM0 channel 5 output/capture input.
			EPWM1_CH5	I/O	MFP12	EPWM1 channel 5 output/capture input.
			EPWM0_BRAKE1	I	MFP13	EPWM0 Brake 1 input pin.
	11	11	V_{SS}	P	MFP0	Ground pin for digital circuit.
	12	12	V_{DD}	P	MFP0	Power supply for I/O ports and LDO source for internal PLL and digital circuit.
8	13	13	PA.11	I/O	MFP0	General purpose digital I/O pin.
			ACMP0_P0	A	MFP1	Analog comparator 0 positive input 0 pin.
			EBI_nRD	O	MFP2	EBI read enable output pin.
			SC2_PWR	O	MFP3	Smart Card 2 power pin.
			SPI2_SS	I/O	MFP4	SPI2 slave select pin.
			SD1_DAT3	I/O	MFP5	SD/SDIO1 data line bit 3.
			USCI0_CLK	I/O	MFP6	USCI0 clock pin.
			I^2C2_SCL	I/O	MFP7	I^2C2 clock pin.
			BPWM0_CH0	I/O	MFP9	BPWM0 channel 0 output/capture input.
			EPWM0_SYNC_OUT	O	MFP10	EPWM0 counter synchronous trigger output pin.
			TM0_EXT	I/O	MFP13	Timer0 event counter input/toggle output pin.
			DAC1_ST	I	MFP14	DAC1 external trigger input.
9	14	14	PA.10	I/O	MFP0	General purpose digital I/O pin.
			ACMP1_P0	A	MFP1	Analog comparator 1 positive input 0 pin.

64 Pin	128 Pin	144 Pin	Pin Name	Type	MFP	Description
			OPA1_O	A	MFP1	Operational amplifier 1 output pin.
			EBI_nWR	O	MFP2	EBI write enable output pin.
			SC2_RST	O	MFP3	Smart Card 2 reset pin.
			SPI2_CLK	I/O	MFP4	SPI2 serial clock pin.
			SD1_DAT2	I/O	MFP5	SD/SDIO1 data line bit 2.
			USCI0_DAT0	I/O	MFP6	USCI0 data 0 pin.
			I^2C2_SDA	I/O	MFP7	I^2C2 data input/output pin.
			BPWM0_CH1	I/O	MFP9	BPWM0 channel 1 output/capture input.
			QEI1_INDEX	I	MFP10	Quadrature encoder 1 index input
			ECAP0_IC0	I	MFP11	Enhanced capture unit 0 input 0 pin.
			TM1_EXT	I/O	MFP13	Timer1 event counter input/toggle output pin.
			DAC0_ST	I	MFP14	DAC0 external trigger input.
10	15	15	PA.9	I/O	MFP0	General purpose digital I/O pin.
			OPA1_N	A	MFP1	Operational amplifier 1 negative input pin.
			EBI_MCLK	O	MFP2	EBI external clock output pin.
			SC2_DAT	I/O	MFP3	Smart Card 2 data pin.
			SPI2_MISO	I/O	MFP4	SPI2 MISO (Master In, Slave Out) pin.
			SD1_DAT1	I/O	MFP5	SD/SDIO1 data line bit 1.
			USCI0_DAT1	I/O	MFP6	USCI0 data 1 pin.
			UART1_TXD	O	MFP7	UART1 data transmitter output pin.
			BPWM0_CH2	I/O	MFP9	BPWM0 channel 2 output/capture input.
			QEI1_A	I	MFP10	Quadrature encoder 1 phase A input
			ECAP0_IC1	I	MFP11	Enhanced capture unit 0 input 1 pin.
			TM2_EXT	I/O	MFP13	Timer2 event counter input/toggle output pin.
11	16	16	PA.8	I/O	MFP0	General purpose digital I/O pin.
			OPA1_P	A	MFP1	Operational amplifier 1 positive input pin.
			EBI_ALE	O	MFP2	EBI address latch enable output pin.
			SC2_CLK	O	MFP3	Smart Card 2 clock pin.
			SPI2_MOSI	I/O	MFP4	SPI2 MOSI (Master Out, Slave In) pin.
			SD1_DAT0	I/O	MFP5	SD/SDIO1 data line bit 0.
			USCI0_CTL1	I/O	MFP6	USCI0 control 1 pin.
			UART1_RXD	I	MFP7	UART1 data receiver input pin.

64 Pin	128 Pin	144 Pin	Pin Name	Type	MFP	Description
			BPWM0_CH3	I/O	MFP9	BPWM0 channel 3 output/capture input.
			QEI1_B	I	MFP10	Quadrature encoder 1 phase B input
			ECAP0_IC2	I	MFP11	Enhanced capture unit 0 input 2 pin.
			TM3_EXT	I/O	MFP13	Timer3 event counter input/toggle output pin.
			INT4	I	MFP15	External interrupt 4 input pin.
	17	17	PC.13	I/O	MFP0	General purpose digital I/O pin.
			EBI_ADR10	O	MFP2	EBI address bus bit 10.
			SC2_nCD	I	MFP3	Smart Card 2 card detect pin.
			SPI2_I2SMCLK	I/O	MFP4	SPI2 I^2S master clock output pin
			CAN1_TXD	O	MFP5	CAN1 bus transmitter output.
			USCI0_CTL0	I/O	MFP6	USCI0 control 0 pin.
			UART2_TXD	O	MFP7	UART2 data transmitter output pin.
			BPWM0_CH4	I/O	MFP9	BPWM0 channel 4 output/capture input.
			CLKO	O	MFP13	Clock Out
			EADC0_ST	I	MFP14	EADC0 external trigger input.
	18	18	PD.12	I/O	MFP0	General purpose digital I/O pin.
			OPA2_O	A	MFP1	Operational amplifier 2 output pin.
			EBI_nCS0	O	MFP2	EBI chip select 0 output pin.
			CAN1_RXD	I	MFP5	CAN1 bus receiver input.
			UART2_RXD	I	MFP7	UART2 data receiver input pin.
			BPWM0_CH5	I/O	MFP9	BPWM0 channel 5 output/capture input.
			QEI0_INDEX	I	MFP10	Quadrature encoder 0 index input
			CLKO	O	MFP13	Clock Out
			EADC0_ST	I	MFP14	EADC0 external trigger input.
			INT5	I	MFP15	External interrupt 5 input pin.
	19	19	PD.11	I/O	MFP0	General purpose digital I/O pin.
			OPA2_N	A	MFP1	Operational amplifier 2 negative input pin.
			EBI_nCS1	O	MFP2	EBI chip select 1 output pin.
			UART1_TXD	O	MFP3	UART1 data transmitter output pin.
			CAN0_TXD	O	MFP4	CAN0 bus transmitter output.
			QEI0_A	I	MFP10	Quadrature encoder 0 phase A input
			INT6	I	MFP15	External interrupt 6 input pin.
	20	20	PD.10	I/O	MFP0	General purpose digital I/O pin.
			OPA2_P	A	MFP1	Operational amplifier 2 positive input pin.

64 Pin	128 Pin	144 Pin	Pin Name	Type	MFP	Description
			EBI_nCS2	O	MFP2	EBI chip select 2 output pin.
			UART1_RXD	I	MFP3	UART1 data receiver input pin.
			CAN0_RXD	I	MFP4	CAN0 bus receiver input.
			QEI0_B	I	MFP10	Quadrature encoder 0 phase B input
			INT7	I	MFP15	External interrupt 7 input pin.
		21	V_{SS}	P	MFP0	Ground pin for digital circuit.
		22	V_{DD}	P	MFP0	Power supply for I/O ports and LDO source for internal PLL and digital circuit.
		23	PG.0	I/O	MFP0	General purpose digital I/O pin.
			EBI_ADR8	O	MFP2	EBI address bus bit 8.
			I^2C0_SCL	I/O	MFP4	I^2C0 clock pin.
			I^2C1_SMBAL	O	MFP5	I^2C1 SMBus SMBALTER pin
			UART2_RXD	I	MFP6	UART2 data receiver input pin.
			CAN1_TXD	O	MFP7	CAN1 bus transmitter output.
			UART1_TXD	O	MFP8	UART1 data transmitter output pin.
		24	PG.1	I/O	MFP0	General purpose digital I/O pin.
			EBI_ADR9	O	MFP2	EBI address bus bit 9.
			SPI2_I2SMCLK	I/O	MFP3	SPI2 I^2S master clock output pin
			I^2C0_SDA	I/O	MFP4	I^2C0 data input/output pin.
			I^2C1_SMBSUS	O	MFP5	I^2C1 SMBus SMBSUS pin (PMBus CONTROL pin)
			UART2_TXD	O	MFP6	UART2 data transmitter output pin.
			CAN1_RXD	I	MFP7	CAN1 bus receiver input.
			UART1_RXD	I	MFP8	UART1 data receiver input pin.
	21	25	PG.2	I/O	MFP0	General purpose digital I/O pin.
			EBI_ADR11	O	MFP2	EBI address bus bit 11.
			SPI2_SS	I/O	MFP3	SPI2 slave select pin.
			I^2C0_SMBAL	O	MFP4	I^2C0 SMBus SMBALTER pin
			I^2C1_SCL	I/O	MFP5	I^2C1 clock pin.
			TM0	I/O	MFP13	Timer0 event counter input/toggle output pin.
	22	26	PG.3	I/O	MFP0	General purpose digital I/O pin.
			EBI_ADR12	O	MFP2	EBI address bus bit 12.
			SPI2_CLK	I/O	MFP3	SPI2 serial clock pin.
			I^2C0_SMBSUS	O	MFP4	I^2C0 SMBus SMBSUS pin (PMBus CONTROL pin)
			I^2C1_SDA	I/O	MFP5	I^2C1 data input/output pin.

64 Pin	128 Pin	144 Pin	Pin Name	Type	MFP	Description
			TM1	I/O	MFP13	Timer1 event counter input/toggle output pin.
	23	27	PG.4	I/O	MFP0	General purpose digital I/O pin.
			EBI_ADR13	O	MFP2	EBI address bus bit 13.
			SPI2_MISO	I/O	MFP3	SPI2 MISO (Master In, Slave Out) pin.
			TM2	I/O	MFP13	Timer2 event counter input/toggle output pin.
	24	28	PF.11	I/O	MFP0	General purpose digital I/O pin.
			EBI_ADR14	O	MFP2	EBI address bus bit 14.
			SPI2_MOSI	I/O	MFP3	SPI2 MOSI (Master Out, Slave In) pin.
			TAMPER5	I/O	MFP10	TAMPER detector loop pin 5.
			TM3	I/O	MFP13	Timer3 event counter input/toggle output pin.
	25	29	PF.10	I/O	MFP0	General purpose digital I/O pin.
			EBI_ADR15	O	MFP2	EBI address bus bit 15.
			SC0_nCD	I	MFP3	Smart Card 0 card detect pin.
			I^2S0_BCLK	O	MFP4	I^2S0 bit clock output pin.
			SPI0_I2SMCLK	I/O	MFP5	SPI0 I^2S master clock output pin
			TAMPER4	I/O	MFP10	TAMPER detector loop pin 4.
	26	30	PF.9	I/O	MFP0	General purpose digital I/O pin.
			EBI_ADR16	O	MFP2	EBI address bus bit 16.
			SC0_PWR	O	MFP3	Smart Card 0 power pin.
			I^2S0_MCLK	O	MFP4	I^2S0 master clock output pin.
			SPI0_SS	I/O	MFP5	SPI0 slave select pin.
			TAMPER3	I/O	MFP10	TAMPER detector loop pin 3.
	27	31	PF.8	I/O	MFP0	General purpose digital I/O pin.
			EBI_ADR17	O	MFP2	EBI address bus bit 17.
			SC0_RST	O	MFP3	Smart Card 0 reset pin.
			I^2S0_DI	I	MFP4	I^2S0 data input pin.
			SPI0_CLK	I/O	MFP5	SPI0 serial clock pin.
			TAMPER2	I/O	MFP10	TAMPER detector loop pin 2.
	28	32	PF.7	I/O	MFP0	General purpose digital I/O pin.
			EBI_ADR18	O	MFP2	EBI address bus bit 18.
			SC0_DAT	I/O	MFP3	Smart Card 0 data pin.
			I^2S0_DO	O	MFP4	I^2S0 data output pin.
			SPI0_MISO	I/O	MFP5	SPI0 MISO (Master In, Slave Out) pin.
			UART4_TXD	O	MFP6	UART4 data transmitter output pin.

64 Pin	128 Pin	144 Pin	Pin Name	Type	MFP	Description
			TAMPER1	I/O	MFP10	TAMPER detector loop pin 1.
12	29	33	PF.6	I/O	MFP0	General purpose digital I/O pin.
			EBI_ADR19	O	MFP2	EBI address bus bit 19.
			SC0_CLK	O	MFP3	Smart Card 0 clock pin.
			I^2S0_LRCK	O	MFP4	I^2S0 left right channel clock output pin.
			SPI0_MOSI	I/O	MFP5	SPI0 MOSI (Master Out, Slave In) pin.
			UART4_RXD	I	MFP6	UART4 data receiver input pin.
			EBI_nCS0	O	MFP7	EBI chip select 0 output pin.
			TAMPER0	I/O	MFP10	TAMPER detector loop pin 0.
13	30	34	V_{DD}	P	MFP0	Power supply for I/O ports and LDO source for internal PLL and digital circuit.
14	31	35	PF.5	I/O	MFP0	General purpose digital I/O pin.
			UART2_RXD	I	MFP2	UART2 data receiver input pin.
			UART2_nCTS	I	MFP4	UART2 clear to Send input pin.
			BPWM0_CH4	I/O	MFP8	BPWM0 channel 4 output/capture input.
			EPWM0_SYNC_OUT	O	MFP9	EPWM0 counter synchronous trigger output pin.
			X32_IN	I	MFP10	External 32.768 kHz crystal input pin.
			EADC0_ST	I	MFP11	EADC0 external trigger input.
15	32	36	PF.4	I/O	MFP0	General purpose digital I/O pin.
			UART2_TXD	O	MFP2	UART2 data transmitter output pin.
			UART2_nRTS	O	MFP4	UART2 request to Send output pin.
			BPWM0_CH5	I/O	MFP8	BPWM0 channel 5 output/capture input.
			X32_OUT	O	MFP10	External 32.768 kHz crystal output pin.
		37	PH.0	I/O	MFP0	General purpose digital I/O pin.
			EBI_ADR7	O	MFP2	EBI address bus bit 7.
			UART5_TXD	O	MFP4	UART5 data transmitter output pin.
			TM0_EXT	I/O	MFP13	Timer0 event counter input/toggle output pin.
		38	PH.1	I/O	MFP0	General purpose digital I/O pin.
			EBI_ADR6	O	MFP2	EBI address bus bit 6.
			UART5_RXD	I	MFP4	UART5 data receiver input pin.
			TM1_EXT	I/O	MFP13	Timer1 event counter input/toggle output pin.
		39	PH.2	I/O	MFP0	General purpose digital I/O pin.
			EBI_ADR5	O	MFP2	EBI address bus bit 5.
			UART5_nRTS	O	MFP4	UART5 request to Send output pin.

64 Pin	128 Pin	144 Pin	Pin Name	Type	MFP	Description
			UART4_TXD	O	MFP5	UART4 data transmitter output pin.
			I²C0_SCL	I/O	MFP6	I²C0 clock pin.
			TM2_EXT	I/O	MFP13	Timer2 event counter input/toggle output pin.
		40	PH.3	I/O	MFP0	General purpose digital I/O pin.
			EBI_ADR4	O	MFP2	EBI address bus bit 4.
			SPI1_I2SMCLK	I/O	MFP3	SPI1 I²S master clock output pin
			UART5_nCTS	I	MFP4	UART5 clear to Send input pin.
			UART4_RXD	I	MFP5	UART4 data receiver input pin.
			I²C0_SDA	I/O	MFP6	I²C0 data input/output pin.
			TM3_EXT	I/O	MFP13	Timer3 event counter input/toggle output pin.
	33	41	PH.4	I/O	MFP0	General purpose digital I/O pin.
			EBI_ADR3	O	MFP2	EBI address bus bit 3.
			SPI1_MISO	I/O	MFP3	SPI1 MISO (Master In, Slave Out) pin.
	34	42	PH.5	I/O	MFP0	General purpose digital I/O pin.
			EBI_ADR2	O	MFP2	EBI address bus bit 2.
			SPI1_MOSI	I/O	MFP3	SPI1 MOSI (Master Out, Slave In) pin.
	35	43	PH.6	I/O	MFP0	General purpose digital I/O pin.
			EBI_ADR1	O	MFP2	EBI address bus bit 1.
			SPI1_CLK	I/O	MFP3	SPI1 serial clock pin.
	36	44	PH.7	I/O	MFP0	General purpose digital I/O pin.
			EBI_ADR0	O	MFP2	EBI address bus bit 0.
			SPI1_SS	I/O	MFP3	SPI1 slave select pin.
16	37	45	PF.3	I/O	MFP0	General purpose digital I/O pin.
			EBI_nCS0	O	MFP2	EBI chip select 0 output pin.
			UART0_TXD	O	MFP3	UART0 data transmitter output pin.
			I²C0_SCL	I/O	MFP4	I²C0 clock pin.
			XT1_IN	I	MFP10	External 4~24 MHz (high speed) crystal input pin.
			BPWM1_CH0	I/O	MFP11	BPWM1 channel 0 output/capture input.
17	38	46	PF.2	I/O	MFP0	General purpose digital I/O pin.
			EBI_nCS1	O	MFP2	EBI chip select 1 output pin.
			UART0_RXD	I	MFP3	UART0 data receiver input pin.
			I²C0_SDA	I/O	MFP4	I²C0 data input/output pin.
			QSPI0_CLK	I/O	MFP5	QSPI0 serial clock pin.
			XT1_OUT	O	MFP10	External 4~24 MHz (high speed) crystal output pin.

64 Pin	128 Pin	144 Pin	Pin Name	Type	MFP	Description
			BPWM1_CH1	I/O	MFP11	BPWM1 channel 1 output/capture input.
	39	47	V_{SS}	P	MFP0	Ground pin for digital circuit.
	40	48	V_{DD}	P	MFP0	Power supply for I/O ports and LDO source for internal PLL and digital circuit.
	41	49	PE.8	I/O	MFP0	General purpose digital I/O pin.
			EBI_ADR10	O	MFP2	EBI address bus bit 10.
			EMAC_RMII_MDC	O	MFP3	EMAC RMII PHY Management Clock output pin.
			I^2S0_BCLK	O	MFP4	I^2S0 bit clock output pin.
			SPI2_CLK	I/O	MFP5	SPI2 serial clock pin.
			USCI1_CTL1	I/O	MFP6	USCI1 control 1 pin.
			UART2_TXD	O	MFP7	UART2 data transmitter output pin.
			EPWM0_CH0	I/O	MFP10	EPWM0 channel 0 output/capture input.
			EPWM0_BRAKE0	I	MFP11	EPWM0 Brake 0 input pin.
			ECAP0_IC0	I	MFP12	Enhanced capture unit 0 input 0 pin.
			TRACE_DATA3	O	MFP14	ETM Trace Data 3 output pin
	42	50	PE.9	I/O	MFP0	General purpose digital I/O pin.
			EBI_ADR11	O	MFP2	EBI address bus bit 11.
			EMAC_RMII_MDIO	I/O	MFP3	EMAC RMII PHY Management Data pin.
			I^2S0_MCLK	O	MFP4	I^2S0 master clock output pin.
			SPI2_MISO	I/O	MFP5	SPI2 MISO (Master In, Slave Out) pin.
			USCI1_CTL0	I/O	MFP6	USCI1 control 0 pin.
			UART2_RXD	I	MFP7	UART2 data receiver input pin.
			EPWM0_CH1	I/O	MFP10	EPWM0 channel 1 output/capture input.
			EPWM0_BRAKE1	I	MFP11	EPWM0 Brake 1 input pin.
			ECAP0_IC1	I	MFP12	Enhanced capture unit 0 input 1 pin.
			TRACE_DATA2	O	MFP14	ETM Trace Data 2 output pin
	43	51	PE.10	I/O	MFP0	General purpose digital I/O pin.
			EBI_ADR12	O	MFP2	EBI address bus bit 12.
			EMAC_RMII_TXD0	O	MFP3	EMAC RMII Transmit Data bus bit 0.
			I^2S0_DI	I	MFP4	I^2S0 data input pin.
			SPI2_MOSI	I/O	MFP5	SPI2 MOSI (Master Out, Slave In) pin.
			USCI1_DAT0	I/O	MFP6	USCI1 data 0 pin.
			UART3_TXD	O	MFP7	UART3 data transmitter output pin.
			EPWM0_CH2	I/O	MFP10	EPWM0 channel 2 output/capture input.

64 Pin	128 Pin	144 Pin	Pin Name	Type	MFP	Description
			EPWM1_BRAKE0	I	MFP11	EPWM1 Brake 0 input pin.
			ECAP0_IC2	I	MFP12	Enhanced capture unit 0 input 2 pin.
			TRACE_DATA1	O	MFP14	ETM Trace Data 1 output pin
	44	52	PE.11	I/O	MFP0	General purpose digital I/O pin.
			EBI_ADR13	O	MFP2	EBI address bus bit 13.
			EMAC_RMII_TXD1	O	MFP3	EMAC RMII Transmit Data bus bit 1.
			I^2S0_DO	O	MFP4	I^2S0 data output pin.
			SPI2_SS	I/O	MFP5	SPI2 slave select pin.
			USCI1_DAT1	I/O	MFP6	USCI1 data 1 pin.
			UART3_RXD	I	MFP7	UART3 data receiver input pin.
			UART1_nCTS	I	MFP8	UART1 clear to Send input pin.
			EPWM0_CH3	I/O	MFP10	EPWM0 channel 3 output/capture input.
			EPWM1_BRAKE1	I	MFP11	EPWM1 Brake 1 input pin.
			ECAP1_IC2	I	MFP13	Enhanced capture unit 1 input 2 pin.
			TRACE_DATA0	O	MFP14	ETM Trace Data 0 output pin
	45	53	PE.12	I/O	MFP0	General purpose digital I/O pin.
			EBI_ADR14	O	MFP2	EBI address bus bit 14.
			EMAC_RMII_TXEN	O	MFP3	EMAC RMII Transmit Enable output pin.
			I^2S0_LRCK	O	MFP4	I^2S0 left right channel clock output pin.
			SPI2_I2SMCLK	I/O	MFP5	SPI2 I^2S master clock output pin
			USCI1_CLK	I/O	MFP6	USCI1 clock pin.
			UART1_nRTS	O	MFP8	UART1 request to Send output pin.
			EPWM0_CH4	I/O	MFP10	EPWM0 channel 4 output/capture input.
			ECAP1_IC1	I	MFP13	Enhanced capture unit 1 input 1 pin.
			TRACE_CLK	O	MFP14	ETM Trace Clock output pin
	46	54	PE.13	I/O	MFP0	General purpose digital I/O pin.
			EBI_ADR15	O	MFP2	EBI address bus bit 15.
			EMAC_PPS	O	MFP3	EMAC Pulse Per Second output pin.
			I^2C0_SCL	I/O	MFP4	I^2C0 clock pin.
			UART4_nRTS	O	MFP5	UART4 request to Send output pin.
			UART1_TXD	O	MFP8	UART1 data transmitter output pin.
			EPWM0_CH5	I/O	MFP10	EPWM0 channel 5 output/capture input.
			EPWM1_CH0	I/O	MFP11	EPWM1 channel 0 output/capture input.
			BPWM1_CH5	I/O	MFP12	BPWM1 channel 5 output/capture input.

64 Pin	128 Pin	144 Pin	Pin Name	Type	MFP	Description
			ECAP1_IC0	I	MFP13	Enhanced capture unit 1 input 0 pin.
	47	55	PC.8	I/O	MFP0	General purpose digital I/O pin.
			EBI_ADR16	O	MFP2	EBI address bus bit 16.
			EMAC_RMII_REFCLK	I	MFP3	EMAC RMII reference clock input pin.
			I^2C0_SDA	I/O	MFP4	I^2C0 data input/output pin.
			UART4_nCTS	I	MFP5	UART4 clear to Send input pin.
			UART1_RXD	I	MFP8	UART1 data receiver input pin.
			EPWM1_CH1	I/O	MFP11	EPWM1 channel 1 output/capture input.
			BPWM1_CH4	I/O	MFP12	BPWM1 channel 4 output/capture input.
18	48	56	PC.7	I/O	MFP0	General purpose digital I/O pin.
			EBI_AD9	I/O	MFP2	EBI address/data bus bit 9.
			EMAC_RMII_RXD0	I	MFP3	EMAC RMII Receive Data bus bit 0.
			SPI1_MISO	I/O	MFP4	SPI1 MISO (Master In, Slave Out) pin.
			UART4_TXD	O	MFP5	UART4 data transmitter output pin.
			SC2_PWR	O	MFP6	Smart Card 2 power pin.
			UART0_nCTS	I	MFP7	UART0 clear to Send input pin.
			I^2C1_SMBAL	O	MFP8	I^2C1 SMBus SMBALTER pin
			EPWM1_CH2	I/O	MFP11	EPWM1 channel 2 output/capture input.
			BPWM1_CH0	I/O	MFP12	BPWM1 channel 0 output/capture input.
			TM0	I/O	MFP14	Timer0 event counter input/toggle output pin.
			INT3	I	MFP15	External interrupt 3 input pin.
19	49	57	PC.6	I/O	MFP0	General purpose digital I/O pin.
			EBI_AD8	I/O	MFP2	EBI address/data bus bit 8.
			EMAC_RMII_RXD1	I	MFP3	EMAC RMII Receive Data bus bit 1.
			SPI1_MOSI	I/O	MFP4	SPI1 MOSI (Master Out, Slave In) pin.
			UART4_RXD	I	MFP5	UART4 data receiver input pin.
			SC2_RST	O	MFP6	Smart Card 2 reset pin.
			UART0_nRTS	O	MFP7	UART0 request to Send output pin.
			I^2C1_SMBSUS	O	MFP8	I^2C1 SMBus SMBSUS pin (PMBus CONTROL pin)
			EPWM1_CH3	I/O	MFP11	EPWM1 channel 3 output/capture input.
			BPWM1_CH1	I/O	MFP12	BPWM1 channel 1 output/capture input.
			TM1	I/O	MFP14	Timer1 event counter input/toggle output pin.
			INT2	I	MFP15	External interrupt 2 input pin.
20	50	58	PA.7	I/O	MFP0	General purpose digital I/O pin.

64 Pin	128 Pin	144 Pin	Pin Name	Type	MFP	Description
			EBI_AD7	I/O	MFP2	EBI address/data bus bit 7.
			EMAC_RMII_CRSDV	I	MFP3	EMAC RMII Carrier Sense/Receive Data input pin.
			SPI1_CLK	I/O	MFP4	SPI1 serial clock pin.
			SC2_DAT	I/O	MFP6	Smart Card 2 data pin.
			UART0_TXD	O	MFP7	UART0 data transmitter output pin.
			I^2C1_SCL	I/O	MFP8	I^2C1 clock pin.
			EPWM1_CH4	I/O	MFP11	EPWM1 channel 4 output/capture input.
			BPWM1_CH2	I/O	MFP12	BPWM1 channel 2 output/capture input.
			ACMP0_WLAT	I	MFP13	Analog comparator 0 window latch input pin
			TM2	I/O	MFP14	Timer2 event counter input/toggle output pin.
			INT1	I	MFP15	External interrupt 1 input pin.
21	51	59	PA.6	I/O	MFP0	General purpose digital I/O pin.
			EBI_AD6	I/O	MFP2	EBI address/data bus bit 6.
			EMAC_RMII_RXERR	I	MFP3	EMAC RMII Receive Data Error input pin.
			SPI1_SS	I/O	MFP4	SPI1 slave select pin.
			SD1_nCD	I	MFP5	SD/SDIO1 card detect input pin
			SC2_CLK	O	MFP6	Smart Card 2 clock pin.
			UART0_RXD	I	MFP7	UART0 data receiver input pin.
			I^2C1_SDA	I/O	MFP8	I^2C1 data input/output pin.
			EPWM1_CH5	I/O	MFP11	EPWM1 channel 5 output/capture input.
			BPWM1_CH3	I/O	MFP12	BPWM1 channel 3 output/capture input.
			ACMP1_WLAT	I	MFP13	Analog comparator 1 window latch input pin
			TM3	I/O	MFP14	Timer3 event counter input/toggle output pin.
			INT0	I	MFP15	External interrupt 0 input pin.
22	52	60	V_{SS}	P	MFP0	Ground pin for digital circuit.
23	53	61	V_{DD}	P	MFP0	Power supply for I/O ports and LDO source for internal PLL and digital circuit.
24	54	62	LDO_CAP	A	MFP0	LDO output pin. **Note:** This pin needs to be connected with an external capacitor.
25	55	63	PA.5	I/O	MFP0	General purpose digital I/O pin.
			SPIM_D2	I/O	MFP2	SPIM data 2 pin for Quad Mode I/O.
			QSPI0_MISO1	I/O	MFP3	QSPI0 MISO1 (Master In, Slave Out) pin.
			SPI1_I2SMCLK	I/O	MFP4	SPI1 I^2S master clock output pin
			SD1_CMD	I/O	MFP5	SD/SDIO1 command/response pin

64 Pin	128 Pin	144 Pin	Pin Name	Type	MFP	Description
			SC2_nCD	I	MFP6	Smart Card 2 card detect pin.
			UART0_nCTS	I	MFP7	UART0 clear to Send input pin.
			UART5_TXD	O	MFP8	UART5 data transmitter output pin.
			I²C0_SCL	I/O	MFP9	I²C0 clock pin.
			CAN0_TXD	O	MFP10	CAN0 bus transmitter output.
			BPWM0_CH5	I/O	MFP12	BPWM0 channel 5 output/capture input.
			EPWM0_CH0	I/O	MFP13	EPWM0 channel 0 output/capture input.
			QEI0_INDEX	I	MFP14	Quadrature encoder 0 index input
26	56	64	PA.4	I/O	MFP0	General purpose digital I/O pin.
			SPIM_D3	I/O	MFP2	SPIM data 3 pin for Quad Mode I/O.
			QSPI0_MOSI1	I/O	MFP3	QSPI0 MOSI1 (Master Out, Slave In) pin.
			SPI0_I2SMCLK	I/O	MFP4	SPI0 I²S master clock output pin
			SD1_CLK	O	MFP5	SD/SDIO1 clock output pin
			SC0_nCD	I	MFP6	Smart Card 0 card detect pin.
			UART0_nRTS	O	MFP7	UART0 request to Send output pin.
			UART5_RXD	I	MFP8	UART5 data receiver input pin.
			I²C0_SDA	I/O	MFP9	I²C0 data input/output pin.
			CAN0_RXD	I	MFP10	CAN0 bus receiver input.
			BPWM0_CH4	I/O	MFP12	BPWM0 channel 4 output/capture input.
			EPWM0_CH1	I/O	MFP13	EPWM0 channel 1 output/capture input.
			QEI0_A	I	MFP14	Quadrature encoder 0 phase A input
27	57	65	PA.3	I/O	MFP0	General purpose digital I/O pin.
			SPIM_SS	I/O	MFP2	SPIM slave select pin.
			QSPI0_SS	I/O	MFP3	QSPI0 slave select pin.
			SPI0_SS	I/O	MFP4	SPI0 slave select pin.
			SD1_DAT3	I/O	MFP5	SD/SDIO1 data line bit 3.
			SC0_PWR	O	MFP6	Smart Card 0 power pin.
			UART4_TXD	O	MFP7	UART4 data transmitter output pin.
			UART1_TXD	O	MFP8	UART1 data transmitter output pin.
			I²C1_SCL	I/O	MFP9	I²C1 clock pin.
			BPWM0_CH3	I/O	MFP12	BPWM0 channel 3 output/capture input.
			EPWM0_CH2	I/O	MFP13	EPWM0 channel 2 output/capture input.
			QEI0_B	I	MFP14	Quadrature encoder 0 phase B input
28	58	66	PA.2	I/O	MFP0	General purpose digital I/O pin.

64 Pin	128 Pin	144 Pin	Pin Name	Type	MFP	Description
			SPIM_CLK	I/O	MFP2	SPIM serial clock pin.
			QSPI0_CLK	I/O	MFP3	QSPI0 serial clock pin.
			SPI0_CLK	I/O	MFP4	SPI0 serial clock pin.
			SD1_DAT2	I/O	MFP5	SD/SDIO1 data line bit 2.
			SC0_RST	O	MFP6	Smart Card 0 reset pin.
			UART4_RXD	I	MFP7	UART4 data receiver input pin.
			UART1_RXD	I	MFP8	UART1 data receiver input pin.
			I^2C1_SDA	I/O	MFP9	I^2C1 data input/output pin.
			BPWM0_CH2	I/O	MFP12	BPWM0 channel 2 output/capture input.
			EPWM0_CH3	I/O	MFP13	EPWM0 channel 3 output/capture input.
29	59	67	PA.1	I/O	MFP0	General purpose digital I/O pin.
			SPIM_MISO	I/O	MFP2	SPIM MISO (Master In, Slave Out) pin.
			QSPI0_MISO0	I/O	MFP3	QSPI0 MISO0 (Master In, Slave Out) pin.
			SPI0_MISO	I/O	MFP4	SPI0 MISO (Master In, Slave Out) pin.
			SD1_DAT1	I/O	MFP5	SD/SDIO1 data line bit 1.
			SC0_DAT	I/O	MFP6	Smart Card 0 data pin.
			UART0_TXD	O	MFP7	UART0 data transmitter output pin.
			UART1_nCTS	I	MFP8	UART1 clear to Send input pin.
			I^2C2_SCL	I/O	MFP9	I^2C2 clock pin.
			BPWM0_CH1	I/O	MFP12	BPWM0 channel 1 output/capture input.
			EPWM0_CH4	I/O	MFP13	EPWM0 channel 4 output/capture input.
			DAC1_ST	I	MFP15	DAC1 external trigger input.
30	60	68	PA.0	I/O	MFP0	General purpose digital I/O pin.
			SPIM_MOSI	I/O	MFP2	SPIM MOSI (Master Out, Slave In) pin.
			QSPI0_MOSI0	I/O	MFP3	QSPI0 MOSI0 (Master Out, Slave In) pin.
			SPI0_MOSI	I/O	MFP4	SPI0 MOSI (Master Out, Slave In) pin.
			SD1_DAT0	I/O	MFP5	SD/SDIO1 data line bit 0.
			SC0_CLK	O	MFP6	Smart Card 0 clock pin.
			UART0_RXD	I	MFP7	UART0 data receiver input pin.
			UART1_nRTS	O	MFP8	UART1 request to Send output pin.
			I^2C2_SDA	I/O	MFP9	I^2C2 data input/output pin.
			BPWM0_CH0	I/O	MFP12	BPWM0 channel 0 output/capture input.
			EPWM0_CH5	I/O	MFP13	EPWM0 channel 5 output/capture input.
			DAC0_ST	I	MFP15	DAC0 external trigger input.

64 Pin	128 Pin	144 Pin	Pin Name	Type	MFP	Description
31	61	69	V_{DDIO}	P	MFP0	Power supply for PA.0~PA.5.
	62	70	PE.14	I/O	MFP0	General purpose digital I/O pin.
			EBI_AD8	I/O	MFP2	EBI address/data bus bit 8.
			UART2_TXD	O	MFP3	UART2 data transmitter output pin.
			CAN0_TXD	O	MFP4	CAN0 bus transmitter output.
			SD1_nCD	I	MFP5	SD/SDIO1 card detect input pin
	63	71	PE.15	I/O	MFP0	General purpose digital I/O pin.
			EBI_AD9	I/O	MFP2	EBI address/data bus bit 9.
			UART2_RXD	I	MFP3	UART2 data receiver input pin.
			CAN0_RXD	I	MFP4	CAN0 bus receiver input.
32	64	72	nRESET	I	MFP0	External reset input: active LOW, with an internal pull-up. Set this pin low reset to initial state. **Note:** It is recommended to use 10 kΩ pull-up resistor and 10 uF capacitor on nRESET pin.
33	65	73	PF.0	I/O	MFP0	General purpose digital I/O pin.
			UART1_TXD	O	MFP2	UART1 data transmitter output pin.
			I^2C1_SCL	I/O	MFP3	I^2C1 clock pin.
			BPWM1_CH0	I/O	MFP12	BPWM1 channel 0 output/capture input.
			ICE_DAT	O	MFP14	Serial wired debugger data pin. **Note:** It is recommended to use 100 kΩ pull-up resistor on ICE_DAT pin.
34	66	74	PF.1	I/O	MFP0	General purpose digital I/O pin.
			UART1_RXD	I	MFP2	UART1 data receiver input pin.
			I^2C1_SDA	I/O	MFP3	I^2C1 data input/output pin.
			BPWM1_CH1	I/O	MFP12	BPWM1 channel 1 output/capture input.
			ICE_CLK	I	MFP14	Serial wired debugger clock pin. **Note:** It is recommended to use 100 kΩ pull-up resistor on ICE_CLK pin.
	67	75	PD.9	I/O	MFP0	General purpose digital I/O pin.
			EBI_AD7	I/O	MFP2	EBI address/data bus bit 7.
			I^2C2_SCL	I/O	MFP3	I^2C2 clock pin.
			UART2_nCTS	I	MFP4	UART2 clear to Send input pin.
	68	76	PD.8	I/O	MFP0	General purpose digital I/O pin.
			EBI_AD6	I/O	MFP2	EBI address/data bus bit 6.
			I^2C2_SDA	I/O	MFP3	I^2C2 data input/output pin.
			UART2_nRTS	O	MFP4	UART2 request to Send output pin.
35	69	77	PC.5	I/O	MFP0	General purpose digital I/O pin.

64 Pin	128 Pin	144 Pin	Pin Name	Type	MFP	Description
			EBI_AD5	I/O	MFP2	EBI address/data bus bit 5.
			SPIM_D2	I/O	MFP3	SPIM data 2 pin for Quad Mode I/O.
			QSPI0_MISO1	I/O	MFP4	QSPI0 MISO1 (Master In, Slave Out) pin.
			UART2_TXD	O	MFP8	UART2 data transmitter output pin.
			I^2C1_SCL	I/O	MFP9	I^2C1 clock pin.
			CAN0_TXD	O	MFP10	CAN0 bus transmitter output.
			UART4_TXD	O	MFP11	UART4 data transmitter output pin.
			EPWM1_CH0	I/O	MFP12	EPWM1 channel 0 output/capture input.
36	70	78	PC.4	I/O	MFP0	General purpose digital I/O pin.
			EBI_AD4	I/O	MFP2	EBI address/data bus bit 4.
			SPIM_D3	I/O	MFP3	SPIM data 3 pin for Quad Mode I/O.
			QSPI0_MOSI1	I/O	MFP4	QSPI0 MOSI1 (Master Out, Slave In) pin.
			SC1_nCD	I	MFP5	Smart Card 1 card detect pin.
			I^2S0_BCLK	O	MFP6	I^2S0 bit clock output pin.
			SPI1_I2SMCLK	I/O	MFP7	SPI1 I^2S master clock output pin
			UART2_RXD	I	MFP8	UART2 data receiver input pin.
			I^2C1_SDA	I/O	MFP9	I^2C1 data input/output pin.
			CAN0_RXD	I	MFP10	CAN0 bus receiver input.
			UART4_RXD	I	MFP11	UART4 data receiver input pin.
			EPWM1_CH1	I/O	MFP12	EPWM1 channel 1 output/capture input.
37	71	79	PC.3	I/O	MFP0	General purpose digital I/O pin.
			EBI_AD3	I/O	MFP2	EBI address/data bus bit 3.
			SPIM_SS	I/O	MFP3	SPIM slave select pin.
			QSPI0_SS	I/O	MFP4	QSPI0 slave select pin.
			SC1_PWR	O	MFP5	Smart Card 1 power pin.
			I^2S0_MCLK	O	MFP6	I^2S0 master clock output pin.
			SPI1_MISO	I/O	MFP7	SPI1 MISO (Master In, Slave Out) pin.
			UART2_nRTS	O	MFP8	UART2 request to Send output pin.
			I^2C0_SMBAL	O	MFP9	I^2C0 SMBus SMBALTER pin
			CAN1_TXD	O	MFP10	CAN1 bus transmitter output.
			UART3_TXD	O	MFP11	UART3 data transmitter output pin.
			EPWM1_CH2	I/O	MFP12	EPWM1 channel 2 output/capture input.
38	72	80	PC.2	I/O	MFP0	General purpose digital I/O pin.
			EBI_AD2	I/O	MFP2	EBI address/data bus bit 2.

64 Pin	128 Pin	144 Pin	Pin Name	Type	MFP	Description
			SPIM_CLK	I/O	MFP3	SPIM serial clock pin.
			QSPI0_CLK	I/O	MFP4	QSPI0 serial clock pin.
			SC1_RST	O	MFP5	Smart Card 1 reset pin.
			I²S0_DI	I	MFP6	I²S0 data input pin.
			SPI1_MOSI	I/O	MFP7	SPI1 MOSI (Master Out, Slave In) pin.
			UART2_nCTS	I	MFP8	UART2 clear to Send input pin.
			I²C0_SMBSUS	O	MFP9	I²C0 SMBus SMBSUS pin (PMBus CONTROL pin)
			CAN1_RXD	I	MFP10	CAN1 bus receiver input.
			UART3_RXD	I	MFP11	UART3 data receiver input pin.
			EPWM1_CH3	I/O	MFP12	EPWM1 channel 3 output/capture input.
39	73	81	PC.1	I/O	MFP0	General purpose digital I/O pin.
			EBI_AD1	I/O	MFP2	EBI address/data bus bit 1.
			SPIM_MISO	I/O	MFP3	SPIM MISO (Master In, Slave Out) pin.
			QSPI0_MISO0	I/O	MFP4	QSPI0 MISO0 (Master In, Slave Out) pin.
			SC1_DAT	I/O	MFP5	Smart Card 1 data pin.
			I²S0_DO	O	MFP6	I²S0 data output pin.
			SPI1_CLK	I/O	MFP7	SPI1 serial clock pin.
			UART2_TXD	O	MFP8	UART2 data transmitter output pin.
			I²C0_SCL	I/O	MFP9	I²C0 clock pin.
			EPWM1_CH4	I/O	MFP12	EPWM1 channel 4 output/capture input.
			ACMP0_O	O	MFP14	Analog comparator 0 output pin.
40	74	82	PC.0	I/O	MFP0	General purpose digital I/O pin.
			EBI_AD0	I/O	MFP2	EBI address/data bus bit 0.
			SPIM_MOSI	I/O	MFP3	SPIM MOSI (Master Out, Slave In) pin.
			QSPI0_MOSI0	I/O	MFP4	QSPI0 MOSI0 (Master Out, Slave In) pin.
			SC1_CLK	O	MFP5	Smart Card 1 clock pin.
			I²S0_LRCK	O	MFP6	I²S0 left right channel clock output pin.
			SPI1_SS	I/O	MFP7	SPI1 slave select pin.
			UART2_RXD	I	MFP8	UART2 data receiver input pin.
			I²C0_SDA	I/O	MFP9	I²C0 data input/output pin.
			EPWM1_CH5	I/O	MFP12	EPWM1 channel 5 output/capture input.
			ACMP1_O	O	MFP14	Analog comparator 1 output pin.
	75	83	V_{SS}	P	MFP0	Ground pin for digital circuit.
	76	84	V_{DD}	P	MFP0	Power supply for I/O ports and LDO source for internal PLL

64 Pin	128 Pin	144 Pin	Pin Name	Type	MFP	Description
						and digital circuit.
	77	85	PG.9	I/O	MFP0	General purpose digital I/O pin.
			EBI_AD0	I/O	MFP2	EBI address/data bus bit 0.
			SD1_DAT3	I/O	MFP3	SD/SDIO1 data line bit 3.
			SPIM_D2	I/O	MFP4	SPIM data 2 pin for Quad Mode I/O.
			BPWM0_CH5	I/O	MFP12	BPWM0 channel 5 output/capture input.
	78	86	PG.10	I/O	MFP0	General purpose digital I/O pin.
			EBI_AD1	I/O	MFP2	EBI address/data bus bit 1.
			SD1_DAT2	I/O	MFP3	SD/SDIO1 data line bit 2.
			SPIM_D3	I/O	MFP4	SPIM data 3 pin for Quad Mode I/O.
			BPWM0_CH4	I/O	MFP12	BPWM0 channel 4 output/capture input.
	79	87	PG.11	I/O	MFP0	General purpose digital I/O pin.
			EBI_AD2	I/O	MFP2	EBI address/data bus bit 2.
			SD1_DAT1	I/O	MFP3	SD/SDIO1 data line bit 1.
			SPIM_SS	I/O	MFP4	SPIM slave select pin.
			BPWM0_CH3	I/O	MFP12	BPWM0 channel 3 output/capture input.
	80	88	PG.12	I/O	MFP0	General purpose digital I/O pin.
			EBI_AD3	I/O	MFP2	EBI address/data bus bit 3.
			SD1_DAT0	I/O	MFP3	SD/SDIO1 data line bit 0.
			SPIM_CLK	I/O	MFP4	SPIM serial clock pin.
			BPWM0_CH2	I/O	MFP12	BPWM0 channel 2 output/capture input.
	81	89	PG.13	I/O	MFP0	General purpose digital I/O pin.
			EBI_AD4	I/O	MFP2	EBI address/data bus bit 4.
			SD1_CMD	I/O	MFP3	SD/SDIO1 command/response pin
			SPIM_MISO	I/O	MFP4	SPIM MISO (Master In, Slave Out) pin.
			BPWM0_CH1	I/O	MFP12	BPWM0 channel 1 output/capture input.
	82	90	PG.14	I/O	MFP0	General purpose digital I/O pin.
			EBI_AD5	I/O	MFP2	EBI address/data bus bit 5.
			SD1_CLK	O	MFP3	SD/SDIO1 clock output pin
			SPIM_MOSI	I/O	MFP4	SPIM MOSI (Master Out, Slave In) pin.
			BPWM0_CH0	I/O	MFP12	BPWM0 channel 0 output/capture input.
	83	91	PG.15	I/O	MFP0	General purpose digital I/O pin.
			SD1_nCD	I	MFP3	SD/SDIO1 card detect input pin
			CLKO	O	MFP14	Clock Out

64 Pin	128 Pin	144 Pin	Pin Name	Type	MFP	Description
			EADC0_ST	I	MFP15	EADC0 external trigger input.
		92	PD.3	I/O	MFP0	General purpose digital I/O pin.
			EBI_AD10	I/O	MFP2	EBI address/data bus bit 10.
			USCI0_CTL1	I/O	MFP3	USCI0 control 1 pin.
			SPI0_SS	I/O	MFP4	SPI0 slave select pin.
			UART3_nRTS	O	MFP5	UART3 request to Send output pin.
			USCI1_CTL0	I/O	MFP6	USCI1 control 0 pin.
			SC2_PWR	O	MFP7	Smart Card 2 power pin.
			SC1_nCD	I	MFP8	Smart Card 1 card detect pin.
			UART0_TXD	O	MFP9	UART0 data transmitter output pin.
		93	PD.2	I/O	MFP0	General purpose digital I/O pin.
			EBI_AD11	I/O	MFP2	EBI address/data bus bit 11.
			USCI0_DAT1	I/O	MFP3	USCI0 data 1 pin.
			SPI0_CLK	I/O	MFP4	SPI0 serial clock pin.
			UART3_nCTS	I	MFP5	UART3 clear to Send input pin.
			SC2_RST	O	MFP7	Smart Card 2 reset pin.
			UART0_RXD	I	MFP9	UART0 data receiver input pin.
		94	PD.1	I/O	MFP0	General purpose digital I/O pin.
			EBI_AD12	I/O	MFP2	EBI address/data bus bit 12.
			USCI0_DAT0	I/O	MFP3	USCI0 data 0 pin.
			SPI0_MISO	I/O	MFP4	SPI0 MISO (Master In, Slave Out) pin.
			UART3_TXD	O	MFP5	UART3 data transmitter output pin.
			I^2C2_SCL	I/O	MFP6	I^2C2 clock pin.
			SC2_DAT	I/O	MFP7	Smart Card 2 data pin.
		95	PD.0	I/O	MFP0	General purpose digital I/O pin.
			EBI_AD13	I/O	MFP2	EBI address/data bus bit 13.
			USCI0_CLK	I/O	MFP3	USCI0 clock pin.
			SPI0_MOSI	I/O	MFP4	SPI0 MOSI (Master Out, Slave In) pin.
			UART3_RXD	I	MFP5	UART3 data receiver input pin.
			I^2C2_SDA	I/O	MFP6	I^2C2 data input/output pin.
			SC2_CLK	O	MFP7	Smart Card 2 clock pin.
			TM2	I/O	MFP14	Timer2 event counter input/toggle output pin.
	84	96	PD.13	I/O	MFP0	General purpose digital I/O pin.
			EBI_AD10	I/O	MFP2	EBI address/data bus bit 10.

64 Pin	128 Pin	144 Pin	Pin Name	Type	MFP	Description
			SD0_nCD	I	MFP3	SD/SDIO0 card detect input pin
			SPI0_I2SMCLK	I/O	MFP4	SPI0 I^2S master clock output pin
			SPI1_I2SMCLK	I/O	MFP5	SPI1 I^2S master clock output pin
			SC2_nCD	I	MFP7	Smart Card 2 card detect pin.
	85	97	PA.12	I/O	MFP0	General purpose digital I/O pin.
			I^2S0_BCLK	O	MFP2	I^2S0 bit clock output pin.
			UART4_TXD	O	MFP3	UART4 data transmitter output pin.
			I^2C1_SCL	I/O	MFP4	I^2C1 clock pin.
			SPI2_SS	I/O	MFP5	SPI2 slave select pin.
			CAN0_TXD	O	MFP6	CAN0 bus transmitter output.
			SC2_PWR	O	MFP7	Smart Card 2 power pin.
			BPWM1_CH2	I/O	MFP11	BPWM1 channel 2 output/capture input.
			QEI1_INDEX	I	MFP12	Quadrature encoder 1 index input
			USB_VBUS	P	MFP14	Power supply from USB host or HUB.
	86	98	PA.13	I/O	MFP0	General purpose digital I/O pin.
			I^2S0_MCLK	O	MFP2	I^2S0 master clock output pin.
			UART4_RXD	I	MFP3	UART4 data receiver input pin.
			I^2C1_SDA	I/O	MFP4	I^2C1 data input/output pin.
			SPI2_CLK	I/O	MFP5	SPI2 serial clock pin.
			CAN0_RXD	I	MFP6	CAN0 bus receiver input.
			SC2_RST	O	MFP7	Smart Card 2 reset pin.
			BPWM1_CH3	I/O	MFP11	BPWM1 channel 3 output/capture input.
			QEI1_A	I	MFP12	Quadrature encoder 1 phase A input
			USB_D-	A	MFP14	USB differential signal D-.
	87	99	PA.14	I/O	MFP0	General purpose digital I/O pin.
			I^2S0_DI	I	MFP2	I^2S0 data input pin.
			UART0_TXD	O	MFP3	UART0 data transmitter output pin.
			SPI2_MISO	I/O	MFP5	SPI2 MISO (Master In, Slave Out) pin.
			I^2C2_SCL	I/O	MFP6	I^2C2 clock pin.
			SC2_DAT	I/O	MFP7	Smart Card 2 data pin.
			BPWM1_CH4	I/O	MFP11	BPWM1 channel 4 output/capture input.
			QEI1_B	I	MFP12	Quadrature encoder 1 phase B input
			USB_D+	A	MFP14	USB differential signal D+.
	88	100	PA.15	I/O	MFP0	General purpose digital I/O pin.

64 Pin	128 Pin	144 Pin	Pin Name	Type	MFP	Description
			I^2S0_DO	O	MFP2	I^2S0 data output pin.
			UART0_RXD	I	MFP3	UART0 data receiver input pin.
			SPI2_MOSI	I/O	MFP5	SPI2 MOSI (Master Out, Slave In) pin.
			I^2C2_SDA	I/O	MFP6	I^2C2 data input/output pin.
			SC2_CLK	O	MFP7	Smart Card 2 clock pin.
			BPWM1_CH5	I/O	MFP11	BPWM1 channel 5 output/capture input.
			EPWM0_SYNC_IN	I	MFP12	EPWM0 counter synchronous trigger input pin.
			USB_OTG_ID	I	MFP14	USB_ identification.
41	89	101	HSUSB_VRES	A	MFP0	HSUSB module reference resister
42	90	102	$HSUSB_V_{DD33}$	P	MFP0	Power supply for HSUSB V_{DD33}
43	91	103	HSUSB_VBUS	P	MFP0	HSUSB Power supply from USB host or HUB.
44	92	104	HSUSB_D-	A	MFP0	HSUSB differential signal D-.
45	93	105	HSUSB_VSS	P	MFP0	Ground pin for HSUSB.
46	94	106	HSUSB_D+	A	MFP0	HSUSB differential signal D+.
47	95	107	$HSUSB_V_{DD12}_CAP$	A	MFP0	HSUSB Internal power regulator output 1.2V decoupling pin. **Note:** This pin needs to be connected with a 1uF capacitor.
48	96	108	HSUSB_ID	I	MFP0	HSUSB identification.
	97	109	PE.7	I/O	MFP0	General purpose digital I/O pin.
			SD0_CMD	I/O	MFP3	SD/SDIO0 command/response pin
			SPIM_D2	I/O	MFP4	SPIM data 2 pin for Quad Mode I/O.
			UART5_TXD	O	MFP8	UART5 data transmitter output pin.
			CAN1_TXD	O	MFP9	CAN1 bus transmitter output.
			QEI1_INDEX	I	MFP11	Quadrature encoder 1 index input
			EPWM0_CH0	I/O	MFP12	EPWM0 channel 0 output/capture input.
			BPWM0_CH5	I/O	MFP13	BPWM0 channel 5 output/capture input.
	98	110	PE.6	I/O	MFP0	General purpose digital I/O pin.
			SD0_CLK	O	MFP3	SD/SDIO0 clock output pin
			SPIM_D3	I/O	MFP4	SPIM data 3 pin for Quad Mode I/O.
			SPI3_I2SMCLK	I/O	MFP5	SPI3 I^2S master clock output pin
			SC0_nCD	I	MFP6	Smart Card 0 card detect pin.
			USCI0_CTL0	I/O	MFP7	USCI0 control 0 pin.
			UART5_RXD	I	MFP8	UART5 data receiver input pin.
			CAN1_RXD	I	MFP9	CAN1 bus receiver input.
			QEI1_A	I	MFP11	Quadrature encoder 1 phase A input

64 Pin	128 Pin	144 Pin	Pin Name	Type	MFP	Description
			EPWM0_CH1	I/O	MFP12	EPWM0 channel 1 output/capture input.
			BPWM0_CH4	I/O	MFP13	BPWM0 channel 4 output/capture input.
	99	111	PE.5	I/O	MFP0	General purpose digital I/O pin.
			EBI_nRD	O	MFP2	EBI read enable output pin.
			SD0_DAT3	I/O	MFP3	SD/SDIO0 data line bit 3.
			SPIM_SS	I/O	MFP4	SPIM slave select pin.
			SPI3_SS	I/O	MFP5	SPI3 slave select pin.
			SC0_PWR	O	MFP6	Smart Card 0 power pin.
			USCI0_CTL1	I/O	MFP7	USCI0 control 1 pin.
			QEI1_B	I	MFP11	Quadrature encoder 1 phase B input
			EPWM0_CH2	I/O	MFP12	EPWM0 channel 2 output/capture input.
			BPWM0_CH3	I/O	MFP13	BPWM0 channel 3 output/capture input.
	100	112	PE.4	I/O	MFP0	General purpose digital I/O pin.
			EBI_nWR	O	MFP2	EBI write enable output pin.
			SD0_DAT2	I/O	MFP3	SD/SDIO0 data line bit 2.
			SPIM_CLK	I/O	MFP4	SPIM serial clock pin.
			SPI3_CLK	I/O	MFP5	SPI3 serial clock pin.
			SC0_RST	O	MFP6	Smart Card 0 reset pin.
			USCI0_DAT1	I/O	MFP7	USCI0 data 1 pin.
			QEI0_INDEX	I	MFP11	Quadrature encoder 0 index input
			EPWM0_CH3	I/O	MFP12	EPWM0 channel 3 output/capture input.
			BPWM0_CH2	I/O	MFP13	BPWM0 channel 2 output/capture input.
	101	113	PE.3	I/O	MFP0	General purpose digital I/O pin.
			EBI_MCLK	O	MFP2	EBI external clock output pin.
			SD0_DAT1	I/O	MFP3	SD/SDIO0 data line bit 1.
			SPIM_MISO	I/O	MFP4	SPIM MISO (Master In, Slave Out) pin.
			SPI3_MISO	I/O	MFP5	SPI3 MISO (Master In, Slave Out) pin.
			SC0_DAT	I/O	MFP6	Smart Card 0 data pin.
			USCI0_DAT0	I/O	MFP7	USCI0 data 0 pin.
			QEI0_A	I	MFP11	Quadrature encoder 0 phase A input
			EPWM0_CH4	I/O	MFP12	EPWM0 channel 4 output/capture input.
			BPWM0_CH1	I/O	MFP13	BPWM0 channel 1 output/capture input.
	102	114	PE.2	I/O	MFP0	General purpose digital I/O pin.
			EBI_ALE	O	MFP2	EBI address latch enable output pin.

64 Pin	128 Pin	144 Pin	Pin Name	Type	MFP	Description
			SD0_DAT0	I/O	MFP3	SD/SDIO0 data line bit 0.
			SPIM_MOSI	I/O	MFP4	SPIM MOSI (Master Out, Slave In) pin.
			SPI3_MOSI	I/O	MFP5	SPI3 MOSI (Master Out, Slave In) pin.
			SC0_CLK	O	MFP6	Smart Card 0 clock pin.
			USCI0_CLK	I/O	MFP7	USCI0 clock pin.
			QEI0_B	I	MFP11	Quadrature encoder 0 phase B input
			EPWM0_CH5	I/O	MFP12	EPWM0 channel 5 output/capture input.
			BPWM0_CH0	I/O	MFP13	BPWM0 channel 0 output/capture input.
	103	115	V_{SS}	P	MFP0	Ground pin for digital circuit.
	104	116	V_{DD}	P	MFP0	Power supply for I/O ports and LDO source for internal PLL and digital circuit.
	105	117	PE.1	I/O	MFP0	General purpose digital I/O pin.
			EBI_AD10	I/O	MFP2	EBI address/data bus bit 10.
			QSPI0_MISO0	I/O	MFP3	QSPI0 MISO0 (Master In, Slave Out) pin.
			SC2_DAT	I/O	MFP4	Smart Card 2 data pin.
			I^2S0_BCLK	O	MFP5	I^2S0 bit clock output pin.
			SPI1_MISO	I/O	MFP6	SPI1 MISO (Master In, Slave Out) pin.
			UART3_TXD	O	MFP7	UART3 data transmitter output pin.
			I^2C1_SCL	I/O	MFP8	I^2C1 clock pin.
			UART4_nCTS	I	MFP9	UART4 clear to Send input pin.
	106	118	PE.0	I/O	MFP0	General purpose digital I/O pin.
			EBI_AD11	I/O	MFP2	EBI address/data bus bit 11.
			QSPI0_MOSI0	I/O	MFP3	QSPI0 MOSI0 (Master Out, Slave In) pin.
			SC2_CLK	O	MFP4	Smart Card 2 clock pin.
			I^2S0_MCLK	O	MFP5	I^2S0 master clock output pin.
			SPI1_MOSI	I/O	MFP6	SPI1 MOSI (Master Out, Slave In) pin.
			UART3_RXD	I	MFP7	UART3 data receiver input pin.
			I^2C1_SDA	I/O	MFP8	I^2C1 data input/output pin.
			UART4_nRTS	O	MFP9	UART4 request to Send output pin.
	107	119	PH.8	I/O	MFP0	General purpose digital I/O pin.
			EBI_AD12	I/O	MFP2	EBI address/data bus bit 12.
			QSPI0_CLK	I/O	MFP3	QSPI0 serial clock pin.
			SC2_PWR	O	MFP4	Smart Card 2 power pin.
			I^2S0_DI	I	MFP5	I^2S0 data input pin.

64 Pin	128 Pin	144 Pin	Pin Name	Type	MFP	Description
			SPI1_CLK	I/O	MFP6	SPI1 serial clock pin.
			UART3_nRTS	O	MFP7	UART3 request to Send output pin.
			I²C1_SMBAL	O	MFP8	I²C1 SMBus SMBALTER pin
			I²C2_SCL	I/O	MFP9	I²C2 clock pin.
			UART1_TXD	O	MFP10	UART1 data transmitter output pin.
	108	120	PH.9	I/O	MFP0	General purpose digital I/O pin.
			EBI_AD13	I/O	MFP2	EBI address/data bus bit 13.
			QSPI0_SS	I/O	MFP3	QSPI0 slave select pin.
			SC2_RST	O	MFP4	Smart Card 2 reset pin.
			I²S0_DO	O	MFP5	I²S0 data output pin.
			SPI1_SS	I/O	MFP6	SPI1 slave select pin.
			UART3_nCTS	I	MFP7	UART3 clear to Send input pin.
			I²C1_SMBSUS	O	MFP8	I²C1 SMBus SMBSUS pin (PMBus CONTROL pin)
			I²C2_SDA	I/O	MFP9	I²C2 data input/output pin.
			UART1_RXD	I	MFP10	UART1 data receiver input pin.
	109	121	PH.10	I/O	MFP0	General purpose digital I/O pin.
			EBI_AD14	I/O	MFP2	EBI address/data bus bit 14.
			QSPI0_MISO1	I/O	MFP3	QSPI0 MISO1 (Master In, Slave Out) pin.
			SC2_nCD	I	MFP4	Smart Card 2 card detect pin.
			I²S0_LRCK	O	MFP5	I²S0 left right channel clock output pin.
			SPI1_I2SMCLK	I/O	MFP6	SPI1 I²S master clock output pin
			UART4_TXD	O	MFP7	UART4 data transmitter output pin.
			UART0_TXD	O	MFP8	UART0 data transmitter output pin.
	110	122	PH.11	I/O	MFP0	General purpose digital I/O pin.
			EBI_AD15	I/O	MFP2	EBI address/data bus bit 15.
			QSPI0_MOSI1	I/O	MFP3	QSPI0 MOSI1 (Master Out, Slave In) pin.
			UART4_RXD	I	MFP7	UART4 data receiver input pin.
			UART0_RXD	I	MFP8	UART0 data receiver input pin.
			EPWM0_CH5	I/O	MFP11	EPWM0 channel 5 output/capture input.
	111	123	PD.14	I/O	MFP0	General purpose digital I/O pin.
			EBI_nCS0	O	MFP2	EBI chip select 0 output pin.
			SPI3_I2SMCLK	I/O	MFP3	SPI3 I²S master clock output pin
			SC1_nCD	I	MFP4	Smart Card 1 card detect pin.
			EPWM0_CH4	I/O	MFP11	EPWM0 channel 4 output/capture input.

64 Pin	128 Pin	144 Pin	Pin Name	Type	MFP	Description
		124	PG.5	I/O	MFP0	General purpose digital I/O pin.
			EBI_nCS1	O	MFP2	EBI chip select 1 output pin.
			SPI3_SS	I/O	MFP3	SPI3 slave select pin.
			SC1_PWR	O	MFP4	Smart Card 1 power pin.
			EPWM0_CH3	I/O	MFP11	EPWM0 channel 3 output/capture input.
		125	PG.6	I/O	MFP0	General purpose digital I/O pin.
			EBI_nCS2	O	MFP2	EBI chip select 2 output pin.
			SPI3_CLK	I/O	MFP3	SPI3 serial clock pin.
			SC1_RST	O	MFP4	Smart Card 1 reset pin.
			EPWM0_CH2	I/O	MFP11	EPWM0 channel 2 output/capture input.
		126	PG.7	I/O	MFP0	General purpose digital I/O pin.
			EBI_nWRL	O	MFP2	EBI low byte write enable output pin.
			SPI3_MISO	I/O	MFP3	SPI3 MISO (Master In, Slave Out) pin.
			SC1_DAT	I/O	MFP4	Smart Card 1 data pin.
			EPWM0_CH1	I/O	MFP11	EPWM0 channel 1 output/capture input.
		127	PG.8	I/O	MFP0	General purpose digital I/O pin.
			EBI_nWRH	O	MFP2	EBI high byte write enable output pin
			SPI3_MOSI	I/O	MFP3	SPI3 MOSI (Master Out, Slave In) pin.
			SC1_CLK	O	MFP4	Smart Card 1 clock pin.
			EPWM0_CH0	I/O	MFP11	EPWM0 channel 0 output/capture input.
49	112	128	V_{SS}	P	MFP0	Ground pin for digital circuit.
50	113	129	LDO_CAP	A	MFP0	LDO output pin. **Note:** This pin needs to be connected with an external capacitor.
51	114	130	V_{DD}	P	MFP0	Power supply for I/O ports and LDO source for internal PLL and digital circuit.
52	115	131	PC.14	I/O	MFP0	General purpose digital I/O pin.
			EBI_AD11	I/O	MFP2	EBI address/data bus bit 11.
			SC1_nCD	I	MFP3	Smart Card 1 card detect pin.
			SPI0_I2SMCLK	I/O	MFP4	SPI0 I^2S master clock output pin
			USCI0_CTL0	I/O	MFP5	USCI0 control 0 pin.
			QSPI0_CLK	I/O	MFP6	QSPI0 serial clock pin.
			EPWM0_SYNC_IN	I	MFP11	EPWM0 counter synchronous trigger input pin.
			ETM_TRACE_CLK	I	MFP12	ETM receiver Trace Clock input pin
			TM1	I/O	MFP13	Timer1 event counter input/toggle output pin.

64 Pin	128 Pin	144 Pin	Pin Name	Type	MFP	Description
			USB_VBUS_ST	I	MFP14	USB external V_{BUS} regulator status pin.
			HSUSB_VBUS_ST	I	MFP15	HSUSB external V_{BUS} regulator status pin.
53	116	132	PB.15	I/O	MFP0	General purpose digital I/O pin.
			EADC0_CH15	A	MFP1	EADC0 channel 15 analog input.
			EBI_AD12	I/O	MFP2	EBI address/data bus bit 12.
			SC1_PWR	O	MFP3	Smart Card 1 power pin.
			SPI0_SS	I/O	MFP4	SPI0 slave select pin.
			USCI0_CTL1	I/O	MFP5	USCI0 control 1 pin.
			UART0_nCTS	I	MFP6	UART0 clear to Send input pin.
			UART3_TXD	O	MFP7	UART3 data transmitter output pin.
			I^2C2_SMBAL	O	MFP8	I^2C2 SMBus SMBALTER pin
			EPWM1_CH0	I/O	MFP11	EPWM1 channel 0 output/capture input.
			ETM_TRACE_DATA0	I	MFP12	ETM receiver Trace Data 0 input pin
			TM0_EXT	I/O	MFP13	Timer0 event counter input/toggle output pin.
			USB_VBUS_EN	O	MFP14	USB external V_{BUS} regulator enable pin.
			HSUSB_VBUS_EN	O	MFP15	HSUSB external V_{BUS} regulator enable pin.
54	117	133	PB.14	I/O	MFP0	General purpose digital I/O pin.
			EADC0_CH14	A	MFP1	EADC0 channel 14 analog input.
			EBI_AD13	I/O	MFP2	EBI address/data bus bit 13.
			SC1_RST	O	MFP3	Smart Card 1 reset pin.
			SPI0_CLK	I/O	MFP4	SPI0 serial clock pin.
			USCI0_DAT1	I/O	MFP5	USCI0 data 1 pin.
			UART0_nRTS	O	MFP6	UART0 request to Send output pin.
			UART3_RXD	I	MFP7	UART3 data receiver input pin.
			I^2C2_SMBSUS	O	MFP8	I^2C2 SMBus SMBSUS pin (PMBus CONTROL pin)
			EPWM1_CH1	I/O	MFP11	EPWM1 channel 1 output/capture input.
			ETM_TRACE_DATA1	I	MFP12	ETM receiver Trace Data 1 input pin
			TM1_EXT	I/O	MFP13	Timer1 event counter input/toggle output pin.
			CLKO	O	MFP14	Clock Out
55	118	134	PB.13	I/O	MFP0	General purpose digital I/O pin.
			EADC0_CH13	A	MFP1	EADC0 channel 13 analog input.
			DAC1_OUT	A	MFP1	DAC1 channel analog output.
			ACMP0_P3	A	MFP1	Analog comparator 0 positive input 3 pin.
			ACMP1_P3	A	MFP1	Analog comparator 1 positive input 3 pin.

64 Pin	128 Pin	144 Pin	Pin Name	Type	MFP	Description
			EBI_AD14	I/O	MFP2	EBI address/data bus bit 14.
			SC1_DAT	I/O	MFP3	Smart Card 1 data pin.
			SPI0_MISO	I/O	MFP4	SPI0 MISO (Master In, Slave Out) pin.
			USCI0_DAT0	I/O	MFP5	USCI0 data 0 pin.
			UART0_TXD	O	MFP6	UART0 data transmitter output pin.
			UART3_nRTS	O	MFP7	UART3 request to Send output pin.
			I^2C2_SCL	I/O	MFP8	I^2C2 clock pin.
			EPWM1_CH2	I/O	MFP11	EPWM1 channel 2 output/capture input.
			ETM_TRACE_DATA2	I	MFP12	ETM receiver Trace Data 2 input pin
			TM2_EXT	I/O	MFP13	Timer2 event counter input/toggle output pin.
56	119	135	PB.12	I/O	MFP0	General purpose digital I/O pin.
			EADC0_CH12	A	MFP1	EADC0 channel 12 analog input.
			DAC0_OUT	A	MFP1	DAC0 channel analog output.
			ACMP0_P2	A	MFP1	Analog comparator 0 positive input 2 pin.
			ACMP1_P2	A	MFP1	Analog comparator 1 positive input 2 pin.
			EBI_AD15	I/O	MFP2	EBI address/data bus bit 15.
			SC1_CLK	O	MFP3	Smart Card 1 clock pin.
			SPI0_MOSI	I/O	MFP4	SPI0 MOSI (Master Out, Slave In) pin.
			USCI0_CLK	I/O	MFP5	USCI0 clock pin.
			UART0_RXD	I	MFP6	UART0 data receiver input pin.
			UART3_nCTS	I	MFP7	UART3 clear to Send input pin.
			I^2C2_SDA	I/O	MFP8	I^2C2 data input/output pin.
			SD0_nCD	I	MFP9	SD/SDIO0 card detect input pin
			EPWM1_CH3	I/O	MFP11	EPWM1 channel 3 output/capture input.
			ETM_TRACE_DATA3	I	MFP12	ETM receiver Trace Data 3 input pin
			TM3_EXT	I/O	MFP13	Timer3 event counter input/toggle output pin.
57	120	136	AV_{DD}	P	MFP0	Power supply for internal analog circuit.
58	121	137	V_{REF}	A	MFP0	ADC reference voltage input. **Note:** This pin needs to be connected with a 1uF capacitor.
59	122	138	AV_{SS}	P	MFP0	Ground pin for analog circuit.
60	123	139	PB.11	I/O	MFP0	General purpose digital I/O pin.
			EADC0_CH11	A	MFP1	EADC0 channel 11 analog input.
			EBI_ADR16	O	MFP2	EBI address bus bit 16.
			EMAC_RMII_MDC	O	MFP3	EMAC RMII PHY Management Clock output pin.

64 Pin	128 Pin	144 Pin	Pin Name	Type	MFP	Description
			UART0_nCTS	I	MFP5	UART0 clear to Send input pin.
			UART4_TXD	O	MFP6	UART4 data transmitter output pin.
			I²C1_SCL	I/O	MFP7	I²C1 clock pin.
			CAN0_TXD	O	MFP8	CAN0 bus transmitter output.
			SPI0_I2SMCLK	I/O	MFP9	SPI0 I²S master clock output pin
			BPWM1_CH0	I/O	MFP10	BPWM1 channel 0 output/capture input.
			SPI3_CLK	I/O	MFP11	SPI3 serial clock pin.
			HSUSB_VBUS_ST	I	MFP14	HSUSB external V_{BUS} regulator status pin.
61	124	140	PB.10	I/O	MFP0	General purpose digital I/O pin.
			EADC0_CH10	A	MFP1	EADC0 channel 10 analog input.
			EBI_ADR17	O	MFP2	EBI address bus bit 17.
			EMAC_RMII_MDIO	I/O	MFP3	EMAC RMII PHY Management Data pin.
			USCI1_CTL0	I/O	MFP4	USCI1 control 0 pin.
			UART0_nRTS	O	MFP5	UART0 request to Send output pin.
			UART4_RXD	I	MFP6	UART4 data receiver input pin.
			I²C1_SDA	I/O	MFP7	I²C1 data input/output pin.
			CAN0_RXD	I	MFP8	CAN0 bus receiver input.
			BPWM1_CH1	I/O	MFP10	BPWM1 channel 1 output/capture input.
			SPI3_SS	I/O	MFP11	SPI3 slave select pin.
			HSUSB_VBUS_EN	O	MFP14	HSUSB external V_{BUS} regulator enable pin.
62	125	141	PB.9	I/O	MFP0	General purpose digital I/O pin.
			EADC0_CH9	A	MFP1	EADC0 channel 9 analog input.
			EBI_ADR18	O	MFP2	EBI address bus bit 18.
			EMAC_RMII_TXD0	O	MFP3	EMAC RMII Transmit Data bus bit 0.
			USCI1_CTL1	I/O	MFP4	USCI1 control 1 pin.
			UART0_TXD	O	MFP5	UART0 data transmitter output pin.
			UART1_nCTS	I	MFP6	UART1 clear to Send input pin.
			I²C1_SMBAL	O	MFP7	I²C1 SMBus SMBALTER pin
			BPWM1_CH2	I/O	MFP10	BPWM1 channel 2 output/capture input.
			SPI3_MISO	I/O	MFP11	SPI3 MISO (Master In, Slave Out) pin.
			INT7	I	MFP13	External interrupt 7 input pin.
63	126	142	PB.8	I/O	MFP0	General purpose digital I/O pin.
			EADC0_CH8	A	MFP1	EADC0 channel 8 analog input.
			EBI_ADR19	O	MFP2	EBI address bus bit 19.

64 Pin	128 Pin	144 Pin	Pin Name	Type	MFP	Description
			EMAC_RMII_TXD1	O	MFP3	EMAC RMII Transmit Data bus bit 1.
			USCI1_CLK	I/O	MFP4	USCI1 clock pin.
			UART0_RXD	I	MFP5	UART0 data receiver input pin.
			UART1_nRTS	O	MFP6	UART1 request to Send output pin.
			I^2C1_SMBSUS	O	MFP7	I^2C1 SMBus SMBSUS pin (PMBus CONTROL pin)
			BPWM1_CH3	I/O	MFP10	BPWM1 channel 3 output/capture input.
			SPI3_MOSI	I/O	MFP11	SPI3 MOSI (Master Out, Slave In) pin.
			INT6	I	MFP13	External interrupt 6 input pin.
64	127	143	PB.7	I/O	MFP0	General purpose digital I/O pin.
			EADC0_CH7	A	MFP1	EADC0 channel 7 analog input.
			EBI_nWRL	O	MFP2	EBI low byte write enable output pin.
			EMAC_RMII_TXEN	O	MFP3	EMAC RMII Transmit Enable output pin.
			USCI1_DAT0	I/O	MFP4	USCI1 data 0 pin.
			CAN1_TXD	O	MFP5	CAN1 bus transmitter output.
			UART1_TXD	O	MFP6	UART1 data transmitter output pin.
			SD1_CMD	I/O	MFP7	SD/SDIO1 command/response pin
			EBI_nCS0	O	MFP8	EBI chip select 0 output pin.
			BPWM1_CH4	I/O	MFP10	BPWM1 channel 4 output/capture input.
			EPWM1_BRAKE0	I	MFP11	EPWM1 Brake 0 input pin.
			EPWM1_CH4	I/O	MFP12	EPWM1 channel 4 output/capture input.
			INT5	I	MFP13	External interrupt 5 input pin.
			USB_VBUS_ST	I	MFP14	USB external V_{BUS} regulator status pin.
			ACMP0_O	O	MFP15	Analog comparator 0 output pin.
1	128	144	PB.6	I/O	MFP0	General purpose digital I/O pin.
			EADC0_CH6	A	MFP1	EADC0 channel 6 analog input.
			EBI_nWRH	O	MFP2	EBI high byte write enable output pin
			EMAC_PPS	O	MFP3	EMAC Pulse Per Second output pin.
			USCI1_DAT1	I/O	MFP4	USCI1 data 1 pin.
			CAN1_RXD	I	MFP5	CAN1 bus receiver input.
			UART1_RXD	I	MFP6	UART1 data receiver input pin.
			SD1_CLK	O	MFP7	SD/SDIO1 clock output pin
			EBI_nCS1	O	MFP8	EBI chip select 1 output pin.
			BPWM1_CH5	I/O	MFP10	BPWM1 channel 5 output/capture input.
			EPWM1_BRAKE1	I	MFP11	EPWM1 Brake 1 input pin.

64 Pin	128 Pin	144 Pin	Pin Name	Type	MFP	Description
			EPWM1_CH5	I/O	MFP12	EPWM1 channel 5 output/capture input.
			INT4	I	MFP13	External interrupt 4 input pin.
			USB_VBUS_EN	O	MFP14	USB external V_{BUS} regulator enable pin.
			ACMP1_O	O	MFP15	Analog comparator 1 output pin.

4.3 M48xxE8AE/M48xxGCAE Pin Description

4.3.1 M481 Series Pin Description

MFP* = Multi-function pin. (Refer to section SYS_GPx_MFPL and SYS_GPx_MFPH)

PA.0 MFP0 means SYS_GPA_MFPL[3:0] = 0x0.

PA.9 MFP5 means SYS_GPA_MFPH[7:4] = 0x5.

32 Pin	48 Pin	64 Pin	Pin Name	Type	MFP	Description
	48	1	PB.6	I/O	MFP0	General purpose digital I/O pin.
			EADC0_CH6	A	MFP1	EADC0 channel 6 analog input.
			EBI_nWRHPA.1	O	MFP2	EBI high byte write enable output pin
			CAN1_RXD	I	MFP5	CAN1 bus receiver input.
			UART1_RXD	I	MFP6	UART1 data receiver input pin.
			EBI_nCS1	O	MFP8	EBI chip select 1 output pin.
			BPWM1_CH5	I/O	MFP10	BPWM1 channel 5 output/capture input.
			EPWM1_BRAKE1	I	MFP11	EPWM1 Brake 1 input pin.
			EPWM1_CH5	I/O	MFP12	EPWM1 channel 5 output/capture input.
			INT4	I	MFP13	External interrupt 4 input pin.
			USB_VBUS_EN	O	MFP14	USB external V_{BUS} regulator enable pin.
			ACMP1_O	O	MFP15	Analog comparator 1 output pin.
1	1	2	PB.5	I/O	MFP0	General purpose digital I/O pin.
			EADC0_CH5	A	MFP1	EADC0 channel 5 analog input.
			ACMP1_N	A	MFP1	Analog comparator 1 negative input pin.
			EBI_ADR0	O	MFP2	EBI address bus bit 0.
			SD0_DAT3	I/O	MFP3	SD/SDIO0 data line bit 3.
			SPI1_MISO	I/O	MFP5	SPI1 MISO (Master In, Slave Out) pin.
			I^2C0_SCL	I/O	MFP6	I^2C0 clock pin.
			UART5_TXD	O	MFP7	UART5 data transmitter output pin.
			SC0_CLK	O	MFP9	Smart Card 0 clock pin.
			I^2S0_BCLK	O	MFP10	I^2S0 bit clock output pin.
			EPWM0_CH0	I/O	MFP11	EPWM0 channel 0 output/capture input.
			UART2_TXD	O	MFP12	UART2 data transmitter output pin.
			TM0	I/O	MFP14	Timer0 event counter input/toggle output pin.
			INT0	I	MFP15	External interrupt 0 input pin.
2	2	3	PB.4	I/O	MFP0	General purpose digital I/O pin.
			EADC0_CH4	A	MFP1	EADC0 channel 4 analog input.
			ACMP1_P1	A	MFP1	Analog comparator 1 positive input 1 pin.

32 Pin	48 Pin	64 Pin	Pin Name	Type	MFP	Description
			EBI_ADR1	O	MFP2	EBI address bus bit 1.
			SD0_DAT2	I/O	MFP3	SD/SDIO0 data line bit 2.
			SPI1_MOSI	I/O	MFP5	SPI1 MOSI (Master Out, Slave In) pin.
			I^2C0_SDA	I/O	MFP6	I^2C0 data input/output pin.
			UART5_RXD	I	MFP7	UART5 data receiver input pin.
			SC0_DAT	I/O	MFP9	Smart Card 0 data pin.
			I^2S0_MCLK	O	MFP10	I^2S0 master clock output pin.
			EPWM0_CH1	I/O	MFP11	EPWM0 channel 1 output/capture input.
			UART2_RXD	I	MFP12	UART2 data receiver input pin.
			TM1	I/O	MFP14	Timer1 event counter input/toggle output pin.
			INT1	I	MFP15	External interrupt 1 input pin.
3	3	4	PB.3	I/O	MFP0	General purpose digital I/O pin.
			EADC0_CH3	A	MFP1	EADC0 channel 3 analog input.
			EADC1_CH11	A	MFP1	EADC1 channel 11 analog input.
			ACMP0_N	A	MFP1	Analog comparator 0 negative input pin.
			EBI_ADR2	O	MFP2	EBI address bus bit 2.
			SD0_DAT1	I/O	MFP3	SD/SDIO0 data line bit 1.
			SPI1_CLK	I/O	MFP5	SPI1 serial clock pin.
			UART1_TXD	O	MFP6	UART1 data transmitter output pin.
			UART5_nRTS	O	MFP7	UART5 request to Send output pin.
			SC0_RST	O	MFP9	Smart Card 0 reset pin.
			I^2S0_DI	I	MFP10	I^2S0 data input pin.
			EPWM0_CH2	I/O	MFP11	EPWM0 channel 2 output/capture input.
			I^2C1_SCL	I/O	MFP12	I^2C1 clock pin.
			TM2	I/O	MFP14	Timer2 event counter input/toggle output pin.
			INT2	I	MFP15	External interrupt 2 input pin.
4	4	5	PB.2	I/O	MFP0	General purpose digital I/O pin.
			EADC0_CH2	A	MFP1	EADC0 channel 2 analog input.
			EADC1_CH10	A	MFP1	EADC1 channel 10 analog input.
			ACMP0_P1	A	MFP1	Analog comparator 0 positive input 1 pin.
			EBI_ADR3	O	MFP2	EBI address bus bit 3.
			SD0_DAT0	I/O	MFP3	SD/SDIO0 data line bit 0.
			SPI1_SS	I/O	MFP5	SPI1 slave select pin.
			UART1_RXD	I	MFP6	UART1 data receiver input pin.

32 Pin	48 Pin	64 Pin	Pin Name	Type	MFP	Description
			UART5_nCTS	I	MFP7	UART5 clear to Send input pin.
			SC0_PWR	O	MFP9	Smart Card 0 power pin.
			I²S0_DO	O	MFP10	I²S0 data output pin.
			EPWM0_CH3	I/O	MFP11	EPWM0 channel 3 output/capture input.
			I²C1_SDA	I/O	MFP12	I²C1 data input/output pin.
			TM3	I/O	MFP14	Timer3 event counter input/toggle output pin.
			INT3	I	MFP15	External interrupt 3 input pin.
5	5	6	PB.1	I/O	MFP0	General purpose digital I/O pin.
			EADC0_CH1	A	MFP1	EADC0 channel 1 analog input.
			EADC1_CH9	A	MFP1	EADC1 channel 9 analog input.
			EBI_ADR8	O	MFP2	EBI address bus bit 8.
			SD0_CLK	O	MFP3	SD/SDIO0 clock output pin
			SPI1_I2SMCLK	I/O	MFP5	SPI1 I²S master clock output pin
			UART2_TXD	O	MFP7	UART2 data transmitter output pin.
			I²C1_SCL	I/O	MFP9	I²C1 clock pin.
			I²S0_LRCK	O	MFP10	I²S0 left right channel clock output pin.
			EPWM0_CH4	I/O	MFP11	EPWM0 channel 4 output/capture input.
			EPWM1_CH4	I/O	MFP12	EPWM1 channel 4 output/capture input.
			EPWM0_BRAKE0	I	MFP13	EPWM0 Brake 0 input pin.
6	6	7	PB.0	I/O	MFP0	General purpose digital I/O pin.
			EADC0_CH0	A	MFP1	EADC0 channel 0 analog input.
			EADC1_CH8	A	MFP1	EADC1 channel 8 analog input.
			EBI_ADR9	O	MFP2	EBI address bus bit 9.
			SD0_CMD	I/O	MFP3	SD/SDIO0 command/response pin
			SPI2_I2SMCLK	I/O	MFP4	SPI2 I²S master clock output pin
			UART2_RXD	I	MFP7	UART2 data receiver input pin.
			SPI0_I2SMCLK	I/O	MFP8	SPI0 I²S master clock output pin
			I²C1_SDA	I/O	MFP9	I²C1 data input/output pin.
			EPWM0_CH5	I/O	MFP11	EPWM0 channel 5 output/capture input.
			EPWM1_CH5	I/O	MFP12	EPWM1 channel 5 output/capture input.
			EPWM0_BRAKE1	I	MFP13	EPWM0 Brake 1 input pin.
	7	8	PA.11	I/O	MFP0	General purpose digital I/O pin.
			EADC1_CH7	A	MFP1	EADC1 channel 7 analog input.
			ACMP0_P0	A	MFP1	Analog comparator 0 positive input 0 pin.

32 Pin	48 Pin	64 Pin	Pin Name	Type	MFP	Description
			EBI_nRD	O	MFP2	EBI read enable output pin.
			SPI2_SS	I/O	MFP4	SPI2 slave select pin.
			I²C2_SCL	I/O	MFP7	I²C2 clock pin.
			UART6_TXD	O	MFP8	UART6 data transmitter output pin.
			BPWM0_CH0	I/O	MFP9	BPWM0 channel 0 output/capture input.
			EPWM0_SYNC_OUT	O	MFP10	EPWM0 counter synchronous trigger output pin.
			TM0_EXT	I/O	MFP13	Timer0 external capture input/toggle output pin.
	8	9	PA.10	I/O	MFP0	General purpose digital I/O pin.
			EADC1_CH6	A	MFP1	EADC1 channel 6 analog input.
			ACMP1_P0	A	MFP1	Analog comparator 1 positive input 0 pin.
			EBI_nWR	O	MFP2	EBI write enable output pin.
			SPI2_CLK	I/O	MFP4	SPI2 serial clock pin.
			I²C2_SDA	I/O	MFP7	I²C2 data input/output pin.
			UART6_RXD	I	MFP8	UART6 data receiver input pin.
			BPWM0_CH1	I/O	MFP9	BPWM0 channel 1 output/capture input.
			QEI1_INDEX	I	MFP10	Quadrature encoder 1 index input
			ECAP0_IC0	I	MFP11	Enhanced capture unit 0 input 0 pin.
			TM1_EXT	I/O	MFP13	Timer1 external capture input/toggle output pin.
			DAC0_ST	I	MFP14	DAC0 external trigger input.
	9	10	PA.9	I/O	MFP0	General purpose digital I/O pin.
			EADC1_CH5	A	MFP1	EADC1 channel 5 analog input.
			EBI_MCLK	O	MFP2	EBI external clock output pin.
			SPI2_MISO	I/O	MFP4	SPI2 MISO (Master In, Slave Out) pin.
			UART1_TXD	O	MFP7	UART1 data transmitter output pin.
			UART7_TXD	O	MFP8	UART7 data transmitter output pin.
			BPWM0_CH2	I/O	MFP9	BPWM0 channel 2 output/capture input.
			QEI1_A	I	MFP10	Quadrature encoder 1 phase A input
			ECAP0_IC1	I	MFP11	Enhanced capture unit 0 input 1 pin.
			TM2_EXT	I/O	MFP13	Timer2 external capture input/toggle output pin.
	10	11	PA.8	I/O	MFP0	General purpose digital I/O pin.
			EADC1_CH4	A	MFP1	EADC1 channel 4 analog input.
			EBI_ALE	O	MFP2	EBI address latch enable output pin.

32 Pin	48 Pin	64 Pin	Pin Name	Type	MFP	Description
			SPI2_MOSI	I/O	MFP4	SPI2 MOSI (Master Out, Slave In) pin.
			UART1_RXD	I	MFP7	UART1 data receiver input pin.
			UART7_RXD	I	MFP8	UART7 data receiver input pin.
			BPWM0_CH3	I/O	MFP9	BPWM0 channel 3 output/capture input.
			QEI1_B	I	MFP10	Quadrature encoder 1 phase B input
			ECAP0_IC2	I	MFP11	Enhanced capture unit 0 input 2 pin.
			TM3_EXT	I/O	MFP13	Timer3 external capture input/toggle output pin.
			INT4	I	MFP15	External interrupt 4 input pin.
		12	PF.6	I/O	MFP0	General purpose digital I/O pin.
			EBI_ADR19	O	MFP2	EBI address bus bit 19.
			SC0_CLK	O	MFP3	Smart Card 0 clock pin.
			I^2S0_LRCK	O	MFP4	I^2S0 left right channel clock output pin.
			SPI0_MOSI	I/O	MFP5	SPI0 MOSI (Master Out, Slave In) pin.
			UART4_RXD	I	MFP6	UART4 data receiver input pin.
			EBI_nCS0	O	MFP7	EBI chip select 0 output pin.
			CAN2_RXD	I	MFP8	CAN2 bus receiver input.
			TAMPER0	I/O	MFP10	TAMPER detector loop pin 0.
		13	V_{BAT}	P	MFP0	Power supply by batteries for RTC.
7	11	14	PF.5	I/O	MFP0	General purpose digital I/O pin.
			UART2_RXD	I	MFP2	UART2 data receiver input pin.
			UART2_nCTS	I	MFP4	UART2 clear to Send input pin.
			EPWM0_CH0	I/O	MFP7	EPWM0 channel 0 output/capture input.
			BPWM0_CH4	I/O	MFP8	BPWM0 channel 4 output/capture input.
			EPWM0_SYNC_OUT	O	MFP9	EPWM0 counter synchronous trigger output pin.
			X32_IN	I	MFP10	External 32.768 kHz crystal input pin.
			EADC0_ST	I	MFP11	EADC0 external trigger input.
8	12	15	PF.4	I/O	MFP0	General purpose digital I/O pin.
			UART2_TXD	O	MFP2	UART2 data transmitter output pin.
			UART2_nRTS	O	MFP4	UART2 request to Send output pin.
			EPWM0_CH1	I/O	MFP7	EPWM0 channel 1 output/capture input.
			BPWM0_CH5	I/O	MFP8	BPWM0 channel 5 output/capture input.
			X32_OUT	O	MFP10	External 32.768 kHz crystal output pin.
			EADC1_ST	I	MFP11	EADC1 external trigger input.
9	13	16	PF.3	I/O	MFP0	General purpose digital I/O pin.

32 Pin	48 Pin	64 Pin	Pin Name	Type	MFP	Description
			EBI_nCS0	O	MFP2	EBI chip select 0 output pin.
			UART0_TXD	O	MFP3	UART0 data transmitter output pin.
			I²C0_SCL	I/O	MFP4	I²C0 clock pin.
			XT1_IN	I	MFP10	External 4~24 MHz (high speed) crystal input pin.
			BPWM1_CH0	I/O	MFP11	BPWM1 channel 0 output/capture input.
10	14	17	PF.2	I/O	MFP0	General purpose digital I/O pin.
			EBI_nCS1	O	MFP2	EBI chip select 1 output pin.
			UART0_RXD	I	MFP3	UART0 data receiver input pin.
			I²C0_SDA	I/O	MFP4	I²C0 data input/output pin.
			QSPI0_CLK	I/O	MFP5	Quad SPI0 serial clock pin.
			XT1_OUT	O	MFP10	External 4~24 MHz (high speed) crystal output pin.
			BPWM1_CH1	I/O	MFP11	BPWM1 channel 1 output/capture input.
		18	PC.7	I/O	MFP0	General purpose digital I/O pin.
			EBI_AD9	I/O	MFP2	EBI address/data bus bit 9.
			SPI1_MISO	I/O	MFP4	SPI1 MISO (Master In, Slave Out) pin.
			UART4_TXD	O	MFP5	UART4 data transmitter output pin.
			UART0_nCTS	I	MFP7	UART0 clear to Send input pin.
			I²C1_SMBAL	O	MFP8	I²C1 SMBus SMBALTER pin
			UART6_TXD	O	MFP9	UART6 data transmitter output pin.
			EPWM1_CH2	I/O	MFP11	EPWM1 channel 2 output/capture input.
			BPWM1_CH0	I/O	MFP12	BPWM1 channel 0 output/capture input.
			TM0	I/O	MFP14	Timer0 event counter input/toggle output pin.
			INT3	I	MFP15	External interrupt 3 input pin.
		19	PC.6	I/O	MFP0	General purpose digital I/O pin.
			EBI_AD8	I/O	MFP2	EBI address/data bus bit 8.
			SPI1_MOSI	I/O	MFP4	SPI1 MOSI (Master Out, Slave In) pin.
			UART4_RXD	I	MFP5	UART4 data receiver input pin.
			UART0_nRTS	O	MFP7	UART0 request to Send output pin.
			I²C1_SMBSUS	O	MFP8	I²C1 SMBus SMBSUS pin (PMBus CONTROL pin)
			UART6_RXD	I	MFP9	UART6 data receiver input pin.
			EPWM1_CH3	I/O	MFP11	EPWM1 channel 3 output/capture input.
			BPWM1_CH1	I/O	MFP12	BPWM1 channel 1 output/capture input.
			TM1	I/O	MFP14	Timer1 event counter input/toggle output pin.
			INT2	I	MFP15	External interrupt 2 input pin.

32 Pin	48 Pin	64 Pin	Pin Name	Type	MFP	Description
	15	20	PA.7	I/O	MFP0	General purpose digital I/O pin.
			EBI_AD7	I/O	MFP2	EBI address/data bus bit 7.
			SPI1_CLK	I/O	MFP4	SPI1 serial clock pin.
			UART0_TXD	O	MFP7	UART0 data transmitter output pin.
			I^2C1_SCL	I/O	MFP8	I^2C1 clock pin.
			QSPI1_MISO1	I/O	MFP9	Quad SPI1 MISO1 (Master In, Slave Out) pin.
			EPWM1_CH4	I/O	MFP11	EPWM1 channel 4 output/capture input.
			BPWM1_CH2	I/O	MFP12	BPWM1 channel 2 output/capture input.
			ACMP0_WLAT	I	MFP13	Analog comparator 0 window latch input pin
			TM2	I/O	MFP14	Timer2 event counter input/toggle output pin.
			INT1	I	MFP15	External interrupt 1 input pin.
	16	21	PA.6	I/O	MFP0	General purpose digital I/O pin.
			EBI_AD6	I/O	MFP2	EBI address/data bus bit 6.
			SPI1_SS	I/O	MFP4	SPI1 slave select pin.
			UART0_RXD	I	MFP7	UART0 data receiver input pin.
			I^2C1_SDA	I/O	MFP8	I^2C1 data input/output pin.
			QSPI1_MOSI1	I/O	MFP9	Quad SPI1 MOSI1 (Master Out, Slave In) pin.
			EPWM1_CH5	I/O	MFP11	EPWM1 channel 5 output/capture input.
			BPWM1_CH3	I/O	MFP12	BPWM1 channel 3 output/capture input.
			ACMP1_WLAT	I	MFP13	Analog comparator 1 window latch input pin
			TM3	I/O	MFP14	Timer3 event counter input/toggle output pin.
			INT0	I	MFP15	External interrupt 0 input pin.
		22	V_{SS}	P	MFP0	Ground pin for digital circuit.
		23	V_{DD}	P	MFP0	Power supply for I/O ports and LDO source for internal PLL and digital circuit.
		24	LDO_CAP	A	MFP0	LDO output pin. **Note:** This pin needs to be connected with an external capacitor.
	17	25	PA.5	I/O	MFP0	General purpose digital I/O pin.
			QSPI0_MISO1	I/O	MFP3	Quad SPI0 MISO1 (Master In, Slave Out) pin.
			SPI1_I2SMCLK	I/O	MFP4	SPI1 I^2S master clock output pin
			UART0_nCTS	I	MFP7	UART0 clear to Send input pin.
			UART5_TXD	O	MFP8	UART5 data transmitter output pin.
			I^2C0_SCL	I/O	MFP9	I^2C0 clock pin.
			CAN0_TXD	O	MFP10	CAN0 bus transmitter output.

32 Pin	48 Pin	64 Pin	Pin Name	Type	MFP	Description
			UART0_TXD	O	MFP11	UART0 data transmitter output pin.
			BPWM0_CH5	I/O	MFP12	BPWM0 channel 5 output/capture input.
			EPWM0_CH0	I/O	MFP13	EPWM0 channel 0 output/capture input.
			QEI0_INDEX	I	MFP14	Quadrature encoder 0 index input
	18	26	PA.4	I/O	MFP0	General purpose digital I/O pin.
			QSPI0_MOSI1	I/O	MFP3	Quad SPI0 MOSI1 (Master Out, Slave In) pin.
			SPI0_I2SMCLK	I/O	MFP4	SPI0 I^2S master clock output pin
			SC0_nCD	I	MFP6	Smart Card 0 card detect pin.
			UART0_nRTS	O	MFP7	UART0 request to Send output pin.
			UART5_RXD	I	MFP8	UART5 data receiver input pin.
			I^2C0_SDA	I/O	MFP9	I^2C0 data input/output pin.
			CAN0_RXD	I	MFP10	CAN0 bus receiver input.
			UART0_RXD	I	MFP11	UART0 data receiver input pin.
			BPWM0_CH4	I/O	MFP12	BPWM0 channel 4 output/capture input.
			EPWM0_CH1	I/O	MFP13	EPWM0 channel 1 output/capture input.
			QEI0_A	I	MFP14	Quadrature encoder 0 phase A input
11	19	27	PA.3	I/O	MFP0	General purpose digital I/O pin.
			QSPI0_SS	I/O	MFP3	Quad SPI0 slave select pin.
			SPI0_SS	I/O	MFP4	SPI0 slave select pin.
			SC0_PWR	O	MFP6	Smart Card 0 power pin.
			UART4_TXD	O	MFP7	UART4 data transmitter output pin.
			UART1_TXD	O	MFP8	UART1 data transmitter output pin.
			I^2C1_SCL	I/O	MFP9	I^2C1 clock pin.
			I^2C0_SMBAL	O	MFP10	I^2C0 SMBus SMBALTER pin
			BPWM0_CH3	I/O	MFP12	BPWM0 channel 3 output/capture input.
			EPWM0_CH2	I/O	MFP13	EPWM0 channel 2 output/capture input.
			QEI0_B	I	MFP14	Quadrature encoder 0 phase B input
			EPWM1_BRAKE1	I	MFP15	EPWM1 Brake 1 input pin.
12	20	28	PA.2	I/O	MFP0	General purpose digital I/O pin.
			QSPI0_CLK	I/O	MFP3	Quad SPI0 serial clock pin.
			SPI0_CLK	I/O	MFP4	SPI0 serial clock pin.
			SC0_RST	O	MFP6	Smart Card 0 reset pin.
			UART4_RXD	I	MFP7	UART4 data receiver input pin.
			UART1_RXD	I	MFP8	UART1 data receiver input pin.

32 Pin	48 Pin	64 Pin	Pin Name	Type	MFP	Description
			I²C1_SDA	I/O	MFP9	I²C1 data input/output pin.
			I²C0_SMBSUS	O	MFP10	I²C0 SMBus SMBSUS pin (PMBus CONTROL pin)
			BPWM0_CH2	I/O	MFP12	BPWM0 channel 2 output/capture input.
			EPWM0_CH3	I/O	MFP13	EPWM0 channel 3 output/capture input.
13	21	29	PA.1	I/O	MFP0	General purpose digital I/O pin.
			QSPI0_MISO0	I/O	MFP3	Quad SPI0 MISO0 (Master In, Slave Out) pin.
			SPI0_MISO	I/O	MFP4	SPI0 MISO (Master In, Slave Out) pin.
			SC0_DAT	I/O	MFP6	Smart Card 0 data pin.
			UART0_TXD	O	MFP7	UART0 data transmitter output pin.
			UART1_nCTS	I	MFP8	UART1 clear to Send input pin.
			I²C2_SCL	I/O	MFP9	I²C2 clock pin.
			CCAP_DATA7	I	MFP10	Camera capture data input bus bit 7.
			BPWM0_CH1	I/O	MFP12	BPWM0 channel 1 output/capture input.
			EPWM0_CH4	I/O	MFP13	EPWM0 channel 4 output/capture input.
14	22	30	PA.0	I/O	MFP0	General purpose digital I/O pin.
			QSPI0_MOSI0	I/O	MFP3	Quad SPI0 MOSI0 (Master Out, Slave In) pin.
			SPI0_MOSI	I/O	MFP4	SPI0 MOSI (Master Out, Slave In) pin.
			SC0_CLK	O	MFP6	Smart Card 0 clock pin.
			UART0_RXD	I	MFP7	UART0 data receiver input pin.
			UART1_nRTS	O	MFP8	UART1 request to Send output pin.
			I²C2_SDA	I/O	MFP9	I²C2 data input/output pin.
			CCAP_DATA6	I	MFP10	Camera capture data input bus bit 6.
			BPWM0_CH0	I/O	MFP12	BPWM0 channel 0 output/capture input.
			EPWM0_CH5	I/O	MFP13	EPWM0 channel 5 output/capture input.
			DAC0_ST	I	MFP15	DAC0 external trigger input.
15	23	31	V_{DDIO}	P	MFP0	Power supply for PA.0~PA.5.
16	24	32	nRESET	I	MFP0	External reset input: active LOW, with an internal pull-up. Set this pin low reset to initial state. **Note:** It is recommended to use 10 kΩ pull-up resistor and 10 uF capacitor on nRESET pin.
17	25	33	PF.0	I/O	MFP0	General purpose digital I/O pin.
			UART1_TXD	O	MFP2	UART1 data transmitter output pin.
			I²C1_SCL	I/O	MFP3	I²C1 clock pin.
			UART0_TXD	O	MFP4	UART0 data transmitter output pin.
			BPWM1_CH0	I/O	MFP12	BPWM1 channel 0 output/capture input.

32 Pin	48 Pin	64 Pin	Pin Name	Type	MFP	Description
			ICE_DAT	I/O	MFP14	Serial wired debugger data pin. **Note:** It is recommended to use 100 kΩ pull-up resistor on ICE_DAT pin.
18	26	34	PF.1	I/O	MFP0	General purpose digital I/O pin.
			UART1_RXD	I	MFP2	UART1 data receiver input pin.
			I^2C1_SDA	I/O	MFP3	I^2C1 data input/output pin.
			UART0_RXD	I	MFP4	UART0 data receiver input pin.
			BPWM1_CH1	I/O	MFP12	BPWM1 channel 1 output/capture input.
			ICE_CLK	I/O	MFP14	Serial wired debugger clock pin. **Note:** It is recommended to use 100 kΩ pull-up resistor on ICE_CLK pin.
	27	35	PC.5	I/O	MFP0	General purpose digital I/O pin.
			EBI_AD5	I/O	MFP2	EBI address/data bus bit 5.
			QSPI0_MISO1	I/O	MFP4	Quad SPI0 MISO1 (Master In, Slave Out) pin.
			UART2_TXD	O	MFP8	UART2 data transmitter output pin.
			I^2C1_SCL	I/O	MFP9	I^2C1 clock pin.
			CAN0_TXD	O	MFP10	CAN0 bus transmitter output.
			UART4_TXD	O	MFP11	UART4 data transmitter output pin.
			EPWM1_CH0	I/O	MFP12	EPWM1 channel 0 output/capture input.
			CCAP_DATA5	I	MFP13	Camera capture data input bus bit 5.
			QSPI1_SS	I/O	MFP14	Quad SPI1 slave select pin.
	28	36	PC.4	I/O	MFP0	General purpose digital I/O pin.
			EBI_AD4	I/O	MFP2	EBI address/data bus bit 4.
			QSPI0_MOSI1	I/O	MFP4	Quad SPI0 MOSI1 (Master Out, Slave In) pin.
			I^2S0_BCLK	O	MFP6	I^2S0 bit clock output pin.
			SPI1_I2SMCLK	I/O	MFP7	SPI1 I^2S master clock output pin
			UART2_RXD	I	MFP8	UART2 data receiver input pin.
			I^2C1_SDA	I/O	MFP9	I^2C1 data input/output pin.
			CAN0_RXD	I	MFP10	CAN0 bus receiver input.
			UART4_RXD	I	MFP11	UART4 data receiver input pin.
			EPWM1_CH1	I/O	MFP12	EPWM1 channel 1 output/capture input.
			CCAP_DATA4	I	MFP13	Camera capture data input bus bit 4.
			QSPI1_CLK	I/O	MFP14	Quad SPI1 serial clock pin.
	29	37	PC.3	I/O	MFP0	General purpose digital I/O pin.
			EBI_AD3	I/O	MFP2	EBI address/data bus bit 3.

32 Pin	48 Pin	64 Pin	Pin Name	Type	MFP	Description
			QSPI0_SS	I/O	MFP4	Quad SPI0 slave select pin.
			I²S0_MCLK	O	MFP6	I²S0 master clock output pin.
			SPI1_MISO	I/O	MFP7	SPI1 MISO (Master In, Slave Out) pin.
			UART2_nRTS	O	MFP8	UART2 request to Send output pin.
			I²C0_SMBAL	O	MFP9	I²C0 SMBus SMBALTER pin
			CAN1_TXD	O	MFP10	CAN1 bus transmitter output.
			UART3_TXD	O	MFP11	UART3 data transmitter output pin.
			EPWM1_CH2	I/O	MFP12	EPWM1 channel 2 output/capture input.
			CCAP_DATA3	I	MFP13	Camera capture data input bus bit 3.
			QSPI1_MISO0	I/O	MFP14	Quad SPI1 MISO0 (Master In, Slave Out) pin.
	30	38	PC.2	I/O	MFP0	General purpose digital I/O pin.
			EBI_AD2	I/O	MFP2	EBI address/data bus bit 2.
			QSPI0_CLK	I/O	MFP4	Quad SPI0 serial clock pin.
			I²S0_DI	I	MFP6	I²S0 data input pin.
			SPI1_MOSI	I/O	MFP7	SPI1 MOSI (Master Out, Slave In) pin.
			UART2_nCTS	I	MFP8	UART2 clear to Send input pin.
			I²C0_SMBSUS	O	MFP9	I²C0 SMBus SMBSUS pin (PMBus CONTROL pin)
			CAN1_RXD	I	MFP10	CAN1 bus receiver input.
			UART3_RXD	I	MFP11	UART3 data receiver input pin.
			EPWM1_CH3	I/O	MFP12	EPWM1 channel 3 output/capture input.
			CCAP_DATA2	I	MFP13	Camera capture data input bus bit 2.
			QSPI1_MOSI0	I/O	MFP14	Quad SPI1 MOSI0 (Master Out, Slave In) pin.
19	31	39	PC.1	I/O	MFP0	General purpose digital I/O pin.
			EBI_AD1	I/O	MFP2	EBI address/data bus bit 1.
			QSPI0_MISO0	I/O	MFP4	Quad SPI0 MISO0 (Master In, Slave Out) pin.
			I²S0_DO	O	MFP6	I²S0 data output pin.
			SPI1_CLK	I/O	MFP7	SPI1 serial clock pin.
			UART2_TXD	O	MFP8	UART2 data transmitter output pin.
			I²C0_SCL	I/O	MFP9	I²C0 clock pin.
			CAN2_TXD	O	MFP10	CAN2 bus transmitter output.
			EPWM1_CH4	I/O	MFP12	EPWM1 channel 4 output/capture input.
			CCAP_DATA1	I	MFP13	Camera capture data input bus bit 1.
			ACMP0_O	O	MFP14	Analog comparator 0 output pin.
			EADC0_ST	I	MFP15	EADC0 external trigger input.

32 Pin	48 Pin	64 Pin	Pin Name	Type	MFP	Description
20	32	40	PC.0	I/O	MFP0	General purpose digital I/O pin.
			EBI_AD0	I/O	MFP2	EBI address/data bus bit 0.
			QSPI0_MOSI0	I/O	MFP4	Quad SPI0 MOSI0 (Master Out, Slave In) pin.
			I²S0_LRCK	O	MFP6	I²S0 left right channel clock output pin.
			SPI1_SS	I/O	MFP7	SPI1 slave select pin.
			UART2_RXD	I	MFP8	UART2 data receiver input pin.
			I²C0_SDA	I/O	MFP9	I²C0 data input/output pin.
			CAN2_RXD	I	MFP10	CAN2 bus receiver input.
			EPWM1_CH5	I/O	MFP12	EPWM1 channel 5 output/capture input.
			CCAP_DATA0	I	MFP13	Camera capture data input bus bit 0.
			ACMP1_O	O	MFP14	Analog comparator 1 output pin.
			EADC1_ST	I	MFP15	EADC1 external trigger input.
		41	PD.3	I/O	MFP0	General purpose digital I/O pin.
			EBI_AD10	I/O	MFP2	EBI address/data bus bit 10.
			SPI0_SS	I/O	MFP4	SPI0 slave select pin.
			UART3_nRTS	O	MFP5	UART3 request to Send output pin.
			UART0_TXD	O	MFP9	UART0 data transmitter output pin.
		42	PD.2	I/O	MFP0	General purpose digital I/O pin.
			EBI_AD11	I/O	MFP2	EBI address/data bus bit 11.
			SPI0_CLK	I/O	MFP4	SPI0 serial clock pin.
			UART3_nCTS	I	MFP5	UART3 clear to Send input pin.
			UART0_RXD	I	MFP9	UART0 data receiver input pin.
		43	PD.1	I/O	MFP0	General purpose digital I/O pin.
			EBI_AD12	I/O	MFP2	EBI address/data bus bit 12.
			SPI0_MISO	I/O	MFP4	SPI0 MISO (Master In, Slave Out) pin.
			UART3_TXD	O	MFP5	UART3 data transmitter output pin.
			I²C2_SCL	I/O	MFP6	I²C2 clock pin.
		44	PD.0	I/O	MFP0	General purpose digital I/O pin.
			EBI_AD13	I/O	MFP2	EBI address/data bus bit 13.
			SPI0_MOSI	I/O	MFP4	SPI0 MOSI (Master Out, Slave In) pin.
			UART3_RXD	I	MFP5	UART3 data receiver input pin.
			I²C2_SDA	I/O	MFP6	I²C2 data input/output pin.
			TM2	I/O	MFP14	Timer2 event counter input/toggle output pin.
21	33	45	PA.12	I/O	MFP0	General purpose digital I/O pin.

32 Pin	48 Pin	64 Pin	Pin Name	Type	MFP	Description
			I²S0_BCLK	O	MFP2	I²S0 bit clock output pin.
			UART4_TXD	O	MFP3	UART4 data transmitter output pin.
			I²C1_SCL	I/O	MFP4	I²C1 clock pin.
			SPI2_SS	I/O	MFP5	SPI2 slave select pin.
			CAN0_TXD	O	MFP6	CAN0 bus transmitter output.
			BPWM1_CH2	I/O	MFP11	BPWM1 channel 2 output/capture input.
			QEI1_INDEX	I	MFP12	Quadrature encoder 1 index input
			USB_VBUS	P	MFP14	Power supply from USB host or HUB.
22	34	46	PA.13	I/O	MFP0	General purpose digital I/O pin.
			I²S0_MCLK	O	MFP2	I²S0 master clock output pin.
			UART4_RXD	I	MFP3	UART4 data receiver input pin.
			I²C1_SDA	I/O	MFP4	I²C1 data input/output pin.
			SPI2_CLK	I/O	MFP5	SPI2 serial clock pin.
			CAN0_RXD	I	MFP6	CAN0 bus receiver input.
			BPWM1_CH3	I/O	MFP11	BPWM1 channel 3 output/capture input.
			QEI1_A	I	MFP12	Quadrature encoder 1 phase A input
			USB_D-	A	MFP14	USB differential signal D-.
23	35	47	PA.14	I/O	MFP0	General purpose digital I/O pin.
			I²S0_DI	I	MFP2	I²S0 data input pin.
			UART0_TXD	O	MFP3	UART0 data transmitter output pin.
			SPI2_MISO	I/O	MFP5	SPI2 MISO (Master In, Slave Out) pin.
			I²C2_SCL	I/O	MFP6	I²C2 clock pin.
			BPWM1_CH4	I/O	MFP11	BPWM1 channel 4 output/capture input.
			QEI1_B	I	MFP12	Quadrature encoder 1 phase B input
			USB_D+	A	MFP14	USB differential signal D+.
24	36	48	PA.15	I/O	MFP0	General purpose digital I/O pin.
			I²S0_DO	O	MFP2	I²S0 data output pin.
			UART0_RXD	I	MFP3	UART0 data receiver input pin.
			SPI2_MOSI	I/O	MFP5	SPI2 MOSI (Master Out, Slave In) pin.
			I²C2_SDA	I/O	MFP6	I²C2 data input/output pin.
			BPWM1_CH5	I/O	MFP11	BPWM1 channel 5 output/capture input.
			EPWM0_SYNC_IN	I	MFP12	EPWM0 counter synchronous trigger input pin.
			USB_OTG_ID	I	MFP14	USB_ identification.
25	37	49	V_{SS}	P	MFP0	Ground pin for digital circuit.

32 Pin	48 Pin	64 Pin	Pin Name	Type	MFP	Description
26	38	50	LDO_CAP	A	MFP0	LDO output pin. **Note:** This pin needs to be connected with an external capacitor.
27	39	51	V_{DD}	P	MFP0	Power supply for I/O ports and LDO source for internal PLL and digital circuit.
	40	52	PC.14	I/O	MFP0	General purpose digital I/O pin.
			EBI_AD11	I/O	MFP2	EBI address/data bus bit 11.
			SPI0_I2SMCLK	I/O	MFP4	SPI0 I^2S master clock output pin
			QSPI0_CLK	I/O	MFP6	Quad SPI0 serial clock pin.
			EPWM0_SYNC_IN	I	MFP11	EPWM0 counter synchronous trigger input pin.
			ETM_TRACE_CLK	I	MFP12	ETM receiver Trace Clock input pin
			TM1	I/O	MFP13	Timer1 event counter input/toggle output pin.
			USB_VBUS_ST	I	MFP14	USB external V_{BUS} regulator status pin.
28	41	53	PB.15	I/O	MFP0	General purpose digital I/O pin.
			EADC0_CH15	A	MFP1	EADC0 channel 15 analog input.
			EADC1_CH15	A	MFP1	EADC1 channel 15 analog input.
			EBI_AD12	I/O	MFP2	EBI address/data bus bit 12.
			SPI0_SS	I/O	MFP4	SPI0 slave select pin.
			UART0_nCTS	I	MFP6	UART0 clear to Send input pin.
			UART3_TXD	O	MFP7	UART3 data transmitter output pin.
			I^2C2_SMBAL	O	MFP8	I^2C2 SMBus SMBALTER pin
			EPWM0_BRAKE1	I	MFP10	EPWM0 Brake 1 input pin.
			EPWM1_CH0	I/O	MFP11	EPWM1 channel 0 output/capture input.
			ETM_TRACE_DATA0	I	MFP12	ETM receiver Trace Data 0 input pin
			TM0_EXT	I/O	MFP13	Timer0 external capture input/toggle output pin.
			USB_VBUS_EN	O	MFP14	USB external V_{BUS} regulator enable pin.
29	42	54	PB.14	I/O	MFP0	General purpose digital I/O pin.
			EADC0_CH14	A	MFP1	EADC0 channel 14 analog input.
			EADC1_CH14	A	MFP1	EADC1 channel 14 analog input.
			EBI_AD13	I/O	MFP2	EBI address/data bus bit 13.
			SPI0_CLK	I/O	MFP4	SPI0 serial clock pin.
			UART0_nRTS	O	MFP6	UART0 request to Send output pin.
			UART3_RXD	I	MFP7	UART3 data receiver input pin.
			I^2C2_SMBSUS	O	MFP8	I^2C2 SMBus SMBSUS pin (PMBus CONTROL pin)
			EPWM1_CH1	I/O	MFP11	EPWM1 channel 1 output/capture input.

32 Pin	48 Pin	64 Pin	Pin Name	Type	MFP	Description
			ETM_TRACE_DATA1	I	MFP12	ETM receiver Trace Data 1 input pin
			TM1_EXT	I/O	MFP13	Timer1 external capture input/toggle output pin.
			CLKO	O	MFP14	Clock Out
			USB_VBUS_ST	I	MFP15	USB external V_{BUS} regulator status pin.
30	43	55	PB.13	I/O	MFP0	General purpose digital I/O pin.
			EADC0_CH13	A	MFP1	EADC0 channel 13 analog input.
			EADC1_CH13	A	MFP1	EADC1 channel 13 analog input.
			ACMP0_P3	A	MFP1	Analog comparator 0 positive input 3 pin.
			ACMP1_P3	A	MFP1	Analog comparator 1 positive input 3 pin.
			EBI_AD14	I/O	MFP2	EBI address/data bus bit 14.
			SPI0_MISO	I/O	MFP4	SPI0 MISO (Master In, Slave Out) pin.
			UART0_TXD	O	MFP6	UART0 data transmitter output pin.
			UART3_nRTS	O	MFP7	UART3 request to Send output pin.
			I^2C2_SCL	I/O	MFP8	I^2C2 clock pin.
			CCAP_PIXCLK	I	MFP10	Camera capture interface pix clock input pin.
			EPWM1_CH2	I/O	MFP11	EPWM1 channel 2 output/capture input.
			ETM_TRACE_DATA2	I	MFP12	ETM receiver Trace Data 2 input pin
			TM2_EXT	I/O	MFP13	Timer2 external capture input/toggle output pin.
31	44	56	PB.12	I/O	MFP0	General purpose digital I/O pin.
			EADC0_CH12	A	MFP1	EADC0 channel 12 analog input.
			EADC1_CH12	A	MFP1	EADC1 channel 12 analog input.
			DAC0_OUT	A	MFP1	DAC0 channel analog output.
			ACMP0_P2	A	MFP1	Analog comparator 0 positive input 2 pin.
			ACMP1_P2	A	MFP1	Analog comparator 1 positive input 2 pin.
			EBI_AD15	I/O	MFP2	EBI address/data bus bit 15.
			SPI0_MOSI	I/O	MFP4	SPI0 MOSI (Master Out, Slave In) pin.
			UART0_RXD	I	MFP6	UART0 data receiver input pin.
			UART3_nCTS	I	MFP7	UART3 clear to Send input pin.
			I^2C2_SDA	I/O	MFP8	I^2C2 data input/output pin.
			SD0_nCD	I	MFP9	SD/SDIO0 card detect input pin
			CCAP_SCLK	O	MFP10	Camera capture interface sensor clock pin.
			EPWM1_CH3	I/O	MFP11	EPWM1 channel 3 output/capture input.
			ETM_TRACE_DATA3	I	MFP12	ETM receiver Trace Data 3 input pin
			TM3_EXT	I/O	MFP13	Timer3 external capture input/toggle output pin.

32 Pin	48 Pin	64 Pin	Pin Name	Type	MFP	Description
32	45	57	AV_{DD}	P	MFP0	Power supply for internal analog circuit.
		58	V_{REF}	A	MFP0	ADC reference voltage input. **Note:** This pin needs to be connected with a 1uF capacitor.
	46	59	AV_{SS}	P	MFP0	Ground pin for analog circuit.
		60	PB.11	I/O	MFP0	General purpose digital I/O pin.
			EADC0_CH11	A	MFP1	EADC0 channel 11 analog input.
			EBI_ADR16	O	MFP2	EBI address bus bit 16.
			UART0_nCTS	I	MFP5	UART0 clear to Send input pin.
			UART4_TXD	O	MFP6	UART4 data transmitter output pin.
			I^2C1_SCL	I/O	MFP7	I^2C1 clock pin.
			CAN0_TXD	O	MFP8	CAN0 bus transmitter output.
			SPI0_I2SMCLK	I/O	MFP9	SPI0 I^2S master clock output pin
			BPWM1_CH0	I/O	MFP10	BPWM1 channel 0 output/capture input.
			CCAP_SFIELD	I	MFP12	Camera capture interface SFIELD input pin.
		61	PB.10	I/O	MFP0	General purpose digital I/O pin.
			EADC0_CH10	A	MFP1	EADC0 channel 10 analog input.
			EBI_ADR17	O	MFP2	EBI address bus bit 17.
			UART0_nRTS	O	MFP5	UART0 request to Send output pin.
			UART4_RXD	I	MFP6	UART4 data receiver input pin.
			I^2C1_SDA	I/O	MFP7	I^2C1 data input/output pin.
			CAN0_RXD	I	MFP8	CAN0 bus receiver input.
			BPWM1_CH1	I/O	MFP10	BPWM1 channel 1 output/capture input.
			CCAP_VSYNC	I	MFP12	Camera capture interface vsync input pin.
		62	PB.9	I/O	MFP0	General purpose digital I/O pin.
			EADC0_CH9	A	MFP1	EADC0 channel 9 analog input.
			EBI_ADR18	O	MFP2	EBI address bus bit 18.
			UART0_TXD	O	MFP5	UART0 data transmitter output pin.
			UART1_nCTS	I	MFP6	UART1 clear to Send input pin.
			I^2C1_SMBAL	O	MFP7	I^2C1 SMBus SMBALTER pin
			UART7_TXD	O	MFP8	UART7 data transmitter output pin.
			I^2C0_SCL	I/O	MFP9	I^2C0 clock pin.
			BPWM1_CH2	I/O	MFP10	BPWM1 channel 2 output/capture input.
			CAN2_TXD	O	MFP12	CAN2 bus transmitter output.
			INT7	I	MFP13	External interrupt 7 input pin.

32 Pin	48 Pin	64 Pin	Pin Name	Type	MFP	Description
			CCAP_HSYNC	I	MFP14	Camera capture interface hsync input pin.
		63	PB.8	I/O	MFP0	General purpose digital I/O pin.
			EADC0_CH8	A	MFP1	EADC0 channel 8 analog input.
			EBI_ADR19	O	MFP2	EBI address bus bit 19.
			UART0_RXD	I	MFP5	UART0 data receiver input pin.
			UART1_nRTS	O	MFP6	UART1 request to Send output pin.
			I^2C1_SMBSUS	O	MFP7	I^2C1 SMBus SMBSUS pin (PMBus CONTROL pin)
			UART7_RXD	I	MFP8	UART7 data receiver input pin.
			I^2C0_SDA	I/O	MFP9	I^2C0 data input/output pin.
			BPWM1_CH3	I/O	MFP10	BPWM1 channel 3 output/capture input.
			CAN2_RXD	I	MFP12	CAN2 bus receiver input.
			INT6	I	MFP13	External interrupt 6 input pin.
	47	64	PB.7	I/O	MFP0	General purpose digital I/O pin.
			EADC0_CH7	A	MFP1	EADC0 channel 7 analog input.
			EBI_nWRL	O	MFP2	EBI low byte write enable output pin.
			CAN1_TXD	O	MFP5	CAN1 bus transmitter output.
			UART1_TXD	O	MFP6	UART1 data transmitter output pin.
			EBI_nCS0	O	MFP8	EBI chip select 0 output pin.
			BPWM1_CH4	I/O	MFP10	BPWM1 channel 4 output/capture input.
			EPWM1_BRAKE0	I	MFP11	EPWM1 Brake 0 input pin.
			EPWM1_CH4	I/O	MFP12	EPWM1 channel 4 output/capture input.
			INT5	I	MFP13	External interrupt 5 input pin.
			USB_VBUS_ST	I	MFP14	USB external V_{BUS} regulator status pin.
			ACMP0_O	O	MFP15	Analog comparator 0 output pin.

4.3.2 M482 Series Pin Description

Note: PA.15 MFP can only be as USB_OTG_ID when enable full-Speed USB.

32 Pin	48 Pin	64 Pin	128 Pin	Pin Name	Type	MFP	Description
1	1	2	1	PB.5	I/O	MFP0	General purpose digital I/O pin.
				EADC0_CH5	A	MFP1	EADC0 channel 5 analog input.
				ACMP1_N	A	MFP1	Analog comparator 1 negative input pin.
				EBI_ADR0	O	MFP2	EBI address bus bit 0.
				SD0_DAT3	I/O	MFP3	SD/SDIO0 data line bit 3.
				SPI1_MISO	I/O	MFP5	SPI1 MISO (Master In, Slave Out) pin.
				I^2C0_SCL	I/O	MFP6	I^2C0 clock pin.
				UART5_TXD	O	MFP7	UART5 data transmitter output pin.
				SC0_CLK	O	MFP9	Smart Card 0 clock pin.
				I^2S0_BCLK	O	MFP10	I^2S0 bit clock output pin.
				EPWM0_CH0	I/O	MFP11	EPWM0 channel 0 output/capture input.
				UART2_TXD	O	MFP12	UART2 data transmitter output pin.
				TM0	I/O	MFP14	Timer0 event counter input/toggle output pin.
				INT0	I	MFP15	External interrupt 0 input pin.
2	2	3	2	PB.4	I/O	MFP0	General purpose digital I/O pin.
				EADC0_CH4	A	MFP1	EADC0 channel 4 analog input.
				ACMP1_P1	A	MFP1	Analog comparator 1 positive input 1 pin.
				EBI_ADR1	O	MFP2	EBI address bus bit 1.
				SD0_DAT2	I/O	MFP3	SD/SDIO0 data line bit 2.
				SPI1_MOSI	I/O	MFP5	SPI1 MOSI (Master Out, Slave In) pin.
				I^2C0_SDA	I/O	MFP6	I^2C0 data input/output pin.
				UART5_RXD	I	MFP7	UART5 data receiver input pin.
				SC0_DAT	I/O	MFP9	Smart Card 0 data pin.
				I^2S0_MCLK	O	MFP10	I^2S0 master clock output pin.
				EPWM0_CH1	I/O	MFP11	EPWM0 channel 1 output/capture input.
				UART2_RXD	I	MFP12	UART2 data receiver input pin.
				TM1	I/O	MFP14	Timer1 event counter input/toggle output pin.
				INT1	I	MFP15	External interrupt 1 input pin.
3	3	4	3	PB.3	I/O	MFP0	General purpose digital I/O pin.
				EADC0_CH3	A	MFP1	EADC0 channel 3 analog input.
				EADC1_CH11	A	MFP1	EADC1 channel 11 analog input.
				ACMP0_N	A	MFP1	Analog comparator 0 negative input pin.

32 Pin	48 Pin	64 Pin	128 Pin	Pin Name	Type	MFP	Description
				EBI_ADR2	O	MFP2	EBI address bus bit 2.
				SD0_DAT1	I/O	MFP3	SD/SDIO0 data line bit 1.
				SPI1_CLK	I/O	MFP5	SPI1 serial clock pin.
				UART1_TXD	O	MFP6	UART1 data transmitter output pin.
				UART5_nRTS	O	MFP7	UART5 request to Send output pin.
				SC0_RST	O	MFP9	Smart Card 0 reset pin.
				I^2S0_DI	I	MFP10	I^2S0 data input pin.
				EPWM0_CH2	I/O	MFP11	EPWM0 channel 2 output/capture input.
				I^2C1_SCL	I/O	MFP12	I^2C1 clock pin.
				TM2	I/O	MFP14	Timer2 event counter input/toggle output pin.
				INT2	I	MFP15	External interrupt 2 input pin.
4	4	5	4	PB.2	I/O	MFP0	General purpose digital I/O pin.
				EADC0_CH2	A	MFP1	EADC0 channel 2 analog input.
				EADC1_CH10	A	MFP1	EADC1 channel 10 analog input.
				ACMP0_P1	A	MFP1	Analog comparator 0 positive input 1 pin.
				EBI_ADR3	O	MFP2	EBI address bus bit 3.
				SD0_DAT0	I/O	MFP3	SD/SDIO0 data line bit 0.
				SPI1_SS	I/O	MFP5	SPI1 slave select pin.
				UART1_RXD	I	MFP6	UART1 data receiver input pin.
				UART5_nCTS	I	MFP7	UART5 clear to Send input pin.
				SC0_PWR	O	MFP9	Smart Card 0 power pin.
				I^2S0_DO	O	MFP10	I^2S0 data output pin.
				EPWM0_CH3	I/O	MFP11	EPWM0 channel 3 output/capture input.
				I^2C1_SDA	I/O	MFP12	I^2C1 data input/output pin.
				TM3	I/O	MFP14	Timer3 event counter input/toggle output pin.
				INT3	I	MFP15	External interrupt 3 input pin.
			5	PC.12	I/O	MFP0	General purpose digital I/O pin.
				EBI_ADR4	O	MFP2	EBI address bus bit 4.
				UART0_TXD	O	MFP3	UART0 data transmitter output pin.
				I^2C0_SCL	I/O	MFP4	I^2C0 clock pin.
				UART6_TXD	O	MFP5	UART6 data transmitter output pin.
				SC0_nCD	I	MFP9	Smart Card 0 card detect pin.
				ECAP1_IC2	I	MFP11	Enhanced capture unit 1 input 2 pin.
				EPWM1_CH0	I/O	MFP12	EPWM1 channel 0 output/capture input.

32 Pin	48 Pin	64 Pin	128 Pin	Pin Name	Type	MFP	Description
				ACMP0_O	O	MFP14	Analog comparator 0 output pin.
			6	PC.11	I/O	MFP0	General purpose digital I/O pin.
				EBI_ADR5	O	MFP2	EBI address bus bit 5.
				UART0_RXD	I	MFP3	UART0 data receiver input pin.
				I²C0_SDA	I/O	MFP4	I²C0 data input/output pin.
				UART6_RXD	I	MFP5	UART6 data receiver input pin.
				ECAP1_IC1	I	MFP11	Enhanced capture unit 1 input 1 pin.
				EPWM1_CH1	I/O	MFP12	EPWM1 channel 1 output/capture input.
				ACMP1_O	O	MFP14	Analog comparator 1 output pin.
			7	PC.10	I/O	MFP0	General purpose digital I/O pin.
				EBI_ADR6	O	MFP2	EBI address bus bit 6.
				UART6_nRTS	O	MFP5	UART6 request to Send output pin.
				UART3_TXD	O	MFP7	UART3 data transmitter output pin.
				CAN1_TXD	O	MFP9	CAN1 bus transmitter output.
				ECAP1_IC0	I	MFP11	Enhanced capture unit 1 input 0 pin.
				EPWM1_CH2	I/O	MFP12	EPWM1 channel 2 output/capture input.
				EADC1_ST	I	MFP14	EADC1 external trigger input.
			8	PC.9	I/O	MFP0	General purpose digital I/O pin.
				EBI_ADR7	O	MFP2	EBI address bus bit 7.
				UART6_nCTS	I	MFP5	UART6 clear to Send input pin.
				UART3_RXD	I	MFP7	UART3 data receiver input pin.
				CAN1_RXD	I	MFP9	CAN1 bus receiver input.
				EPWM1_CH3	I/O	MFP12	EPWM1 channel 3 output/capture input.
				EADC1_ST	I	MFP14	EADC1 external trigger input.
5	5	6	9	PB.1	I/O	MFP0	General purpose digital I/O pin.
				EADC0_CH1	A	MFP1	EADC0 channel 1 analog input.
				EADC1_CH9	A	MFP1	EADC1 channel 9 analog input.
				EBI_ADR8	O	MFP2	EBI address bus bit 8.
				SD0_CLK	O	MFP3	SD/SDIO0 clock output pin
				SPI1_I2SMCLK	I/O	MFP5	SPI1 I²S master clock output pin
				UART2_TXD	O	MFP7	UART2 data transmitter output pin.
				I²C1_SCL	I/O	MFP9	I²C1 clock pin.
				I²S0_LRCK	O	MFP10	I²S0 left right channel clock output pin.
				EPWM0_CH4	I/O	MFP11	EPWM0 channel 4 output/capture input.

32 Pin	48 Pin	64 Pin	128 Pin	Pin Name	Type	MFP	Description
				EPWM1_CH4	I/O	MFP12	EPWM1 channel 4 output/capture input.
				EPWM0_BRAKE0	I	MFP13	EPWM0 Brake 0 input pin.
6	6	7	10	PB.0	I/O	MFP0	General purpose digital I/O pin.
				EADC0_CH0	A	MFP1	EADC0 channel 0 analog input.
				EADC1_CH8	A	MFP1	EADC1 channel 8 analog input.
				EBI_ADR9	O	MFP2	EBI address bus bit 9.
				SD0_CMD	I/O	MFP3	SD/SDIO0 command/response pin
				SPI2_I2SMCLK	I/O	MFP4	SPI2 I^2S master clock output pin
				UART2_RXD	I	MFP7	UART2 data receiver input pin.
				SPI0_I2SMCLK	I/O	MFP8	SPI0 I^2S master clock output pin
				I^2C1_SDA	I/O	MFP9	I^2C1 data input/output pin.
				EPWM0_CH5	I/O	MFP11	EPWM0 channel 5 output/capture input.
				EPWM1_CH5	I/O	MFP12	EPWM1 channel 5 output/capture input.
				EPWM0_BRAKE1	I	MFP13	EPWM0 Brake 1 input pin.
			11	V_{SS}	P	MFP0	Ground pin for digital circuit.
			12	V_{DD}	P	MFP0	Power supply for I/O ports and LDO source for internal PLL and digital circuit.
	7	8	13	PA.11	I/O	MFP0	General purpose digital I/O pin.
				EADC1_CH7	A	MFP1	EADC1 channel 7 analog input.
				ACMP0_P0	A	MFP1	Analog comparator 0 positive input 0 pin.
				EBI_nRD	O	MFP2	EBI read enable output pin.
				SPI2_SS	I/O	MFP4	SPI2 slave select pin.
				I^2C2_SCL	I/O	MFP7	I^2C2 clock pin.
				UART6_TXD	O	MFP8	UART6 data transmitter output pin.
				BPWM0_CH0	I/O	MFP9	BPWM0 channel 0 output/capture input.
				EPWM0_SYNC_OUT	O	MFP10	EPWM0 counter synchronous trigger output pin.
				TM0_EXT	I/O	MFP13	Timer0 external capture input/toggle output pin.
	8	9	14	PA.10	I/O	MFP0	General purpose digital I/O pin.
				EADC1_CH6	A	MFP1	EADC1 channel 6 analog input.
				ACMP1_P0	A	MFP1	Analog comparator 1 positive input 0 pin.
				EBI_nWR	O	MFP2	EBI write enable output pin.
				SPI2_CLK	I/O	MFP4	SPI2 serial clock pin.
				I^2C2_SDA	I/O	MFP7	I^2C2 data input/output pin.
				UART6_RXD	I	MFP8	UART6 data receiver input pin.

32 Pin	48 Pin	64 Pin	128 Pin	Pin Name	Type	MFP	Description
				BPWM0_CH1	I/O	MFP9	BPWM0 channel 1 output/capture input.
				QEI1_INDEX	I	MFP10	Quadrature encoder 1 index input
				ECAP0_IC0	I	MFP11	Enhanced capture unit 0 input 0 pin.
				TM1_EXT	I/O	MFP13	Timer1 external capture input/toggle output pin.
				DAC0_ST	I	MFP14	DAC0 external trigger input.
	9	10	15	PA.9	I/O	MFP0	General purpose digital I/O pin.
				EADC1_CH5	A	MFP1	EADC1 channel 5 analog input.
				EBI_MCLK	O	MFP2	EBI external clock output pin.
				SPI2_MISO	I/O	MFP4	SPI2 MISO (Master In, Slave Out) pin.
				UART1_TXD	O	MFP7	UART1 data transmitter output pin.
				UART7_TXD	O	MFP8	UART7 data transmitter output pin.
				BPWM0_CH2	I/O	MFP9	BPWM0 channel 2 output/capture input.
				QEI1_A	I	MFP10	Quadrature encoder 1 phase A input
				ECAP0_IC1	I	MFP11	Enhanced capture unit 0 input 1 pin.
				TM2_EXT	I/O	MFP13	Timer2 external capture input/toggle output pin.
	10	11	16	PA.8	I/O	MFP0	General purpose digital I/O pin.
				EADC1_CH4	A	MFP1	EADC1 channel 4 analog input.
				EBI_ALE	O	MFP2	EBI address latch enable output pin.
				SPI2_MOSI	I/O	MFP4	SPI2 MOSI (Master Out, Slave In) pin.
				UART1_RXD	I	MFP7	UART1 data receiver input pin.
				UART7_RXD	I	MFP8	UART7 data receiver input pin.
				BPWM0_CH3	I/O	MFP9	BPWM0 channel 3 output/capture input.
				QEI1_B	I	MFP10	Quadrature encoder 1 phase B input
				ECAP0_IC2	I	MFP11	Enhanced capture unit 0 input 2 pin.
				TM3_EXT	I/O	MFP13	Timer3 external capture input/toggle output pin.
				INT4	I	MFP15	External interrupt 4 input pin.
			17	PC.13	I/O	MFP0	General purpose digital I/O pin.
				EADC1_CH3	A	MFP1	EADC1 channel 3 analog input.
				EBI_ADR10	O	MFP2	EBI address bus bit 10.
				SPI2_I2SMCLK	I/O	MFP4	SPI2 I^2S master clock output pin
				CAN1_TXD	O	MFP5	CAN1 bus transmitter output.
				UART2_TXD	O	MFP7	UART2 data transmitter output pin.

32 Pin	48 Pin	64 Pin	128 Pin	Pin Name	Type	MFP	Description
				BPWM0_CH4	I/O	MFP9	BPWM0 channel 4 output/capture input.
				CLKO	O	MFP13	Clock Out
				EADC0_ST	I	MFP14	EADC0 external trigger input.
			18	PD.12	I/O	MFP0	General purpose digital I/O pin.
				EADC1_CH2	A	MFP1	EADC1 channel 2 analog input.
				EBI_nCS0	O	MFP2	EBI chip select 0 output pin.
				CAN1_RXD	I	MFP5	CAN1 bus receiver input.
				UART2_RXD	I	MFP7	UART2 data receiver input pin.
				BPWM0_CH5	I/O	MFP9	BPWM0 channel 5 output/capture input.
				QEI0_INDEX	I	MFP10	Quadrature encoder 0 index input
				CLKO	O	MFP13	Clock Out
				EADC0_ST	I	MFP14	EADC0 external trigger input.
				INT5	I	MFP15	External interrupt 5 input pin.
			19	PD.11	I/O	MFP0	General purpose digital I/O pin.
				EADC1_CH1	A	MFP1	EADC1 channel 1 analog input.
				EBI_nCS1	O	MFP2	EBI chip select 1 output pin.
				UART1_TXD	O	MFP3	UART1 data transmitter output pin.
				CAN0_TXD	O	MFP4	CAN0 bus transmitter output.
				QEI0_A	I	MFP10	Quadrature encoder 0 phase A input
				INT6	I	MFP15	External interrupt 6 input pin.
			20	PD.10	I/O	MFP0	General purpose digital I/O pin.
				EADC1_CH0	A	MFP1	EADC1 channel 0 analog input.
				EBI_nCS2	O	MFP2	EBI chip select 2 output pin.
				UART1_RXD	I	MFP3	UART1 data receiver input pin.
				CAN0_RXD	I	MFP4	CAN0 bus receiver input.
				QEI0_B	I	MFP10	Quadrature encoder 0 phase B input
				INT7	I	MFP15	External interrupt 7 input pin.
			21	PG.2	I/O	MFP0	General purpose digital I/O pin.
				EBI_ADR11	O	MFP2	EBI address bus bit 11.
				SPI2_SS	I/O	MFP3	SPI2 slave select pin.
				I^2C0_SMBAL	O	MFP4	I^2C0 SMBus SMBALTER pin
				I^2C1_SCL	I/O	MFP5	I^2C1 clock pin.
				CCAP_DATA7	I	MFP7	Camera capture data input bus bit 7.
				TM0	I/O	MFP13	Timer0 event counter input/toggle output pin.

32 Pin	48 Pin	64 Pin	128 Pin	Pin Name	Type	MFP	Description
			22	PG.3	I/O	MFP0	General purpose digital I/O pin.
				EBI_ADR12	O	MFP2	EBI address bus bit 12.
				SPI2_CLK	I/O	MFP3	SPI2 serial clock pin.
				I^2C0_SMBSUS	O	MFP4	I^2C0 SMBus SMBSUS pin (PMBus CONTROL pin)
				I^2C1_SDA	I/O	MFP5	I^2C1 data input/output pin.
				CCAP_DATA6	I	MFP7	Camera capture data input bus bit 6.
				TM1	I/O	MFP13	Timer1 event counter input/toggle output pin.
			23	PG.4	I/O	MFP0	General purpose digital I/O pin.
				EBI_ADR13	O	MFP2	EBI address bus bit 13.
				SPI2_MISO	I/O	MFP3	SPI2 MISO (Master In, Slave Out) pin.
				CCAP_DATA5	I	MFP7	Camera capture data input bus bit 5.
				TM2	I/O	MFP13	Timer2 event counter input/toggle output pin.
			24	PF.11	I/O	MFP0	General purpose digital I/O pin.
				EBI_ADR14	O	MFP2	EBI address bus bit 14.
				SPI2_MOSI	I/O	MFP3	SPI2 MOSI (Master Out, Slave In) pin.
				UART5_TXD	O	MFP6	UART5 data transmitter output pin.
				CCAP_DATA4	I	MFP7	Camera capture data input bus bit 4.
				TM3	I/O	MFP13	Timer3 event counter input/toggle output pin.
			25	PF.10	I/O	MFP0	General purpose digital I/O pin.
				EBI_ADR15	O	MFP2	EBI address bus bit 15.
				SC0_nCD	I	MFP3	Smart Card 0 card detect pin.
				I^2S0_BCLK	O	MFP4	I^2S0 bit clock output pin.
				SPI0_I2SMCLK	I/O	MFP5	SPI0 I^2S master clock output pin
				UART5_RXD	I	MFP6	UART5 data receiver input pin.
				CCAP_DATA3	I	MFP7	Camera capture data input bus bit 3.
			26	PF.9	I/O	MFP0	General purpose digital I/O pin.
				EBI_ADR16	O	MFP2	EBI address bus bit 16.
				SC0_PWR	O	MFP3	Smart Card 0 power pin.
				I^2S0_MCLK	O	MFP4	I^2S0 master clock output pin.
				SPI0_SS	I/O	MFP5	SPI0 slave select pin.
				UART5_nRTS	O	MFP6	UART5 request to Send output pin.
				CCAP_DATA2	I	MFP7	Camera capture data input bus bit 2.
				CAN1_TXD	O	MFP8	CAN1 bus transmitter output.
			27	PF.8	I/O	MFP0	General purpose digital I/O pin.

32 Pin	48 Pin	64 Pin	128 Pin	Pin Name	Type	MFP	Description
				EBI_ADR17	O	MFP2	EBI address bus bit 17.
				SC0_RST	O	MFP3	Smart Card 0 reset pin.
				I²S0_DI	I	MFP4	I²S0 data input pin.
				SPI0_CLK	I/O	MFP5	SPI0 serial clock pin.
				UART5_nCTS	I	MFP6	UART5 clear to Send input pin.
				CCAP_DATA1	I	MFP7	Camera capture data input bus bit 1.
				CAN1_RXD	I	MFP8	CAN1 bus receiver input.
				TAMPER2	I/O	MFP10	TAMPER detector loop pin 2.
			28	PF.7	I/O	MFP0	General purpose digital I/O pin.
				EBI_ADR18	O	MFP2	EBI address bus bit 18.
				SC0_DAT	I/O	MFP3	Smart Card 0 data pin.
				I²S0_DO	O	MFP4	I²S0 data output pin.
				SPI0_MISO	I/O	MFP5	SPI0 MISO (Master In, Slave Out) pin.
				UART4_TXD	O	MFP6	UART4 data transmitter output pin.
				CCAP_DATA0	I	MFP7	Camera capture data input bus bit 0.
				CAN2_TXD	O	MFP8	CAN2 bus transmitter output.
				TAMPER1	I/O	MFP10	TAMPER detector loop pin 1.
		12	29	PF.6	I/O	MFP0	General purpose digital I/O pin.
				EBI_ADR19	O	MFP2	EBI address bus bit 19.
				SC0_CLK	O	MFP3	Smart Card 0 clock pin.
				I²S0_LRCK	O	MFP4	I²S0 left right channel clock output pin.
				SPI0_MOSI	I/O	MFP5	SPI0 MOSI (Master Out, Slave In) pin.
				UART4_RXD	I	MFP6	UART4 data receiver input pin.
				EBI_nCS0	O	MFP7	EBI chip select 0 output pin.
				CAN2_RXD	I	MFP8	CAN2 bus receiver input.
				TAMPER0	I/O	MFP10	TAMPER detector loop pin 0.
		13	30	V_{BAT}	P	MFP0	Power supply by batteries for RTC.
7	11	14	31	PF.5	I/O	MFP0	General purpose digital I/O pin.
				UART2_RXD	I	MFP2	UART2 data receiver input pin.
				UART2_nCTS	I	MFP4	UART2 clear to Send input pin.
				EPWM0_CH0	I/O	MFP7	EPWM0 channel 0 output/capture input.
				BPWM0_CH4	I/O	MFP8	BPWM0 channel 4 output/capture input.
				EPWM0_SYNC_OUT	O	MFP9	EPWM0 counter synchronous trigger output pin.
				X32_IN	I	MFP10	External 32.768 kHz crystal input pin.

32 Pin	48 Pin	64 Pin	128 Pin	Pin Name	Type	MFP	Description
				EADC0_ST	I	MFP11	EADC0 external trigger input.
8	12	15	32	PF.4	I/O	MFP0	General purpose digital I/O pin.
				UART2_TXD	O	MFP2	UART2 data transmitter output pin.
				UART2_nRTS	O	MFP4	UART2 request to Send output pin.
				EPWM0_CH1	I/O	MFP7	EPWM0 channel 1 output/capture input.
				BPWM0_CH5	I/O	MFP8	BPWM0 channel 5 output/capture input.
				X32_OUT	O	MFP10	External 32.768 kHz crystal output pin.
				EADC1_ST	I	MFP11	EADC1 external trigger input.
			33	PH.4	I/O	MFP0	General purpose digital I/O pin.
				EBI_ADR3	O	MFP2	EBI address bus bit 3.
				SPI1_MISO	I/O	MFP3	SPI1 MISO (Master In, Slave Out) pin.
				UART7_nRTS	O	MFP4	UART7 request to Send output pin.
				UART6_TXD	O	MFP5	UART6 data transmitter output pin.
			34	PH.5	I/O	MFP0	General purpose digital I/O pin.
				EBI_ADR2	O	MFP2	EBI address bus bit 2.
				SPI1_MOSI	I/O	MFP3	SPI1 MOSI (Master Out, Slave In) pin.
				UART7_nCTS	I	MFP4	UART7 clear to Send input pin.
				UART6_RXD	I	MFP5	UART6 data receiver input pin.
			35	PH.6	I/O	MFP0	General purpose digital I/O pin.
				EBI_ADR1	O	MFP2	EBI address bus bit 1.
				SPI1_CLK	I/O	MFP3	SPI1 serial clock pin.
				UART7_TXD	O	MFP4	UART7 data transmitter output pin.
			36	PH.7	I/O	MFP0	General purpose digital I/O pin.
				EBI_ADR0	O	MFP2	EBI address bus bit 0.
				SPI1_SS	I/O	MFP3	SPI1 slave select pin.
				UART7_RXD	I	MFP4	UART7 data receiver input pin.
9	13	16	37	PF.3	I/O	MFP0	General purpose digital I/O pin.
				EBI_nCS0	O	MFP2	EBI chip select 0 output pin.
				UART0_TXD	O	MFP3	UART0 data transmitter output pin.
				I^2C0_SCL	I/O	MFP4	I^2C0 clock pin.
				XT1_IN	I	MFP10	External 4~24 MHz (high speed) crystal input pin.
				BPWM1_CH0	I/O	MFP11	BPWM1 channel 0 output/capture input.
10	14	17	38	PF.2	I/O	MFP0	General purpose digital I/O pin.
				EBI_nCS1	O	MFP2	EBI chip select 1 output pin.

32 Pin	48 Pin	64 Pin	128 Pin	Pin Name	Type	MFP	Description
				UART0_RXD	I	MFP3	UART0 data receiver input pin.
				I²C0_SDA	I/O	MFP4	I²C0 data input/output pin.
				QSPI0_CLK	I/O	MFP5	Quad SPI0 serial clock pin.
				XT1_OUT	O	MFP10	External 4~24 MHz (high speed) crystal output pin.
				BPWM1_CH1	I/O	MFP11	BPWM1 channel 1 output/capture input.
			39	V_{SS}	P	MFP0	Ground pin for digital circuit.
			40	V_{DD}	P	MFP0	Power supply for I/O ports and LDO source for internal PLL and digital circuit.
			41	PE.8	I/O	MFP0	General purpose digital I/O pin.
				EBI_ADR10	O	MFP2	EBI address bus bit 10.
				I²S0_BCLK	O	MFP4	I²S0 bit clock output pin.
				SPI2_CLK	I/O	MFP5	SPI2 serial clock pin.
				UART2_TXD	O	MFP7	UART2 data transmitter output pin.
				EPWM0_CH0	I/O	MFP10	EPWM0 channel 0 output/capture input.
				EPWM0_BRAKE0	I	MFP11	EPWM0 Brake 0 input pin.
				ECAP0_IC0	I	MFP12	Enhanced capture unit 0 input 0 pin.
				TRACE_DATA3	O	MFP14	ETM Trace Data 3 output pin
			42	PE.9	I/O	MFP0	General purpose digital I/O pin.
				EBI_ADR11	O	MFP2	EBI address bus bit 11.
				I²S0_MCLK	O	MFP4	I²S0 master clock output pin.
				SPI2_MISO	I/O	MFP5	SPI2 MISO (Master In, Slave Out) pin.
				UART2_RXD	I	MFP7	UART2 data receiver input pin.
				EPWM0_CH1	I/O	MFP10	EPWM0 channel 1 output/capture input.
				EPWM0_BRAKE1	I	MFP11	EPWM0 Brake 1 input pin.
				ECAP0_IC1	I	MFP12	Enhanced capture unit 0 input 1 pin.
				TRACE_DATA2	O	MFP14	ETM Trace Data 2 output pin
			43	PE.10	I/O	MFP0	General purpose digital I/O pin.
				EBI_ADR12	O	MFP2	EBI address bus bit 12.
				I²S0_DI	I	MFP4	I²S0 data input pin.
				SPI2_MOSI	I/O	MFP5	SPI2 MOSI (Master Out, Slave In) pin.
				UART3_TXD	O	MFP7	UART3 data transmitter output pin.
				EPWM0_CH2	I/O	MFP10	EPWM0 channel 2 output/capture input.
				EPWM1_BRAKE0	I	MFP11	EPWM1 Brake 0 input pin.
				ECAP0_IC2	I	MFP12	Enhanced capture unit 0 input 2 pin.

32 Pin	48 Pin	64 Pin	128 Pin	Pin Name	Type	MFP	Description
				TRACE_DATA1	O	MFP14	ETM Trace Data 1 output pin
			44	PE.11	I/O	MFP0	General purpose digital I/O pin.
				EBI_ADR13	O	MFP2	EBI address bus bit 13.
				I²S0_DO	O	MFP4	I²S0 data output pin.
				SPI2_SS	I/O	MFP5	SPI2 slave select pin.
				UART3_RXD	I	MFP7	UART3 data receiver input pin.
				UART1_nCTS	I	MFP8	UART1 clear to Send input pin.
				EPWM0_CH3	I/O	MFP10	EPWM0 channel 3 output/capture input.
				EPWM1_BRAKE1	I	MFP11	EPWM1 Brake 1 input pin.
				ECAP1_IC2	I	MFP13	Enhanced capture unit 1 input 2 pin.
				TRACE_DATA0	O	MFP14	ETM Trace Data 0 output pin
			45	PE.12	I/O	MFP0	General purpose digital I/O pin.
				EBI_ADR14	O	MFP2	EBI address bus bit 14.
				I²S0_LRCK	O	MFP4	I²S0 left right channel clock output pin.
				SPI2_I2SMCLK	I/O	MFP5	SPI2 I²S master clock output pin
				UART1_nRTS	O	MFP8	UART1 request to Send output pin.
				EPWM0_CH4	I/O	MFP10	EPWM0 channel 4 output/capture input.
				ECAP1_IC1	I	MFP13	Enhanced capture unit 1 input 1 pin.
				TRACE_CLK	O	MFP14	ETM Trace Clock output pin
			46	PE.13	I/O	MFP0	General purpose digital I/O pin.
				EBI_ADR15	O	MFP2	EBI address bus bit 15.
				I²C0_SCL	I/O	MFP4	I²C0 clock pin.
				UART4_nRTS	O	MFP5	UART4 request to Send output pin.
				UART1_TXD	O	MFP8	UART1 data transmitter output pin.
				EPWM0_CH5	I/O	MFP10	EPWM0 channel 5 output/capture input.
				EPWM1_CH0	I/O	MFP11	EPWM1 channel 0 output/capture input.
				BPWM1_CH5	I/O	MFP12	BPWM1 channel 5 output/capture input.
				ECAP1_IC0	I	MFP13	Enhanced capture unit 1 input 0 pin.
			47	PC.8	I/O	MFP0	General purpose digital I/O pin.
				EBI_ADR16	O	MFP2	EBI address bus bit 16.
				I²C0_SDA	I/O	MFP4	I²C0 data input/output pin.
				UART4_nCTS	I	MFP5	UART4 clear to Send input pin.
				UART1_RXD	I	MFP8	UART1 data receiver input pin.
				EPWM1_CH1	I/O	MFP11	EPWM1 channel 1 output/capture input.

32 Pin	48 Pin	64 Pin	128 Pin	Pin Name	Type	MFP	Description
				BPWM1_CH4	I/O	MFP12	BPWM1 channel 4 output/capture input.
		18	48	PC.7	I/O	MFP0	General purpose digital I/O pin.
				EBI_AD9	I/O	MFP2	EBI address/data bus bit 9.
				SPI1_MISO	I/O	MFP4	SPI1 MISO (Master In, Slave Out) pin.
				UART4_TXD	O	MFP5	UART4 data transmitter output pin.
				UART0_nCTS	I	MFP7	UART0 clear to Send input pin.
				I^2C1_SMBAL	O	MFP8	I^2C1 SMBus SMBALTER pin
				UART6_TXD	O	MFP9	UART6 data transmitter output pin.
				EPWM1_CH2	I/O	MFP11	EPWM1 channel 2 output/capture input.
				BPWM1_CH0	I/O	MFP12	BPWM1 channel 0 output/capture input.
				TM0	I/O	MFP14	Timer0 event counter input/toggle output pin.
				INT3	I	MFP15	External interrupt 3 input pin.
		19	49	PC.6	I/O	MFP0	General purpose digital I/O pin.
				EBI_AD8	I/O	MFP2	EBI address/data bus bit 8.
				SPI1_MOSI	I/O	MFP4	SPI1 MOSI (Master Out, Slave In) pin.
				UART4_RXD	I	MFP5	UART4 data receiver input pin.
				UART0_nRTS	O	MFP7	UART0 request to Send output pin.
				I^2C1_SMBSUS	O	MFP8	I^2C1 SMBus SMBSUS pin (PMBus CONTROL pin)
				UART6_RXD	I	MFP9	UART6 data receiver input pin.
				EPWM1_CH3	I/O	MFP11	EPWM1 channel 3 output/capture input.
				BPWM1_CH1	I/O	MFP12	BPWM1 channel 1 output/capture input.
				TM1	I/O	MFP14	Timer1 event counter input/toggle output pin.
				INT2	I	MFP15	External interrupt 2 input pin.
	15	20	50	PA.7	I/O	MFP0	General purpose digital I/O pin.
				EBI_AD7	I/O	MFP2	EBI address/data bus bit 7.
				SPI1_CLK	I/O	MFP4	SPI1 serial clock pin.
				UART0_TXD	O	MFP7	UART0 data transmitter output pin.
				I^2C1_SCL	I/O	MFP8	I^2C1 clock pin.
				QSPI1_MISO1	I/O	MFP9	Quad SPI1 MISO1 (Master In, Slave Out) pin.
				EPWM1_CH4	I/O	MFP11	EPWM1 channel 4 output/capture input.
				BPWM1_CH2	I/O	MFP12	BPWM1 channel 2 output/capture input.
				ACMP0_WLAT	I	MFP13	Analog comparator 0 window latch input pin
				TM2	I/O	MFP14	Timer2 event counter input/toggle output pin.
				INT1	I	MFP15	External interrupt 1 input pin.

32 Pin	48 Pin	64 Pin	128 Pin	Pin Name	Type	MFP	Description
	16	21	51	PA.6	I/O	MFP0	General purpose digital I/O pin.
				EBI_AD6	I/O	MFP2	EBI address/data bus bit 6.
				SPI1_SS	I/O	MFP4	SPI1 slave select pin.
				UART0_RXD	I	MFP7	UART0 data receiver input pin.
				I^2C1_SDA	I/O	MFP8	I^2C1 data input/output pin.
				QSPI1_MOSI1	I/O	MFP9	Quad SPI1 MOSI1 (Master Out, Slave In) pin.
				EPWM1_CH5	I/O	MFP11	EPWM1 channel 5 output/capture input.
				BPWM1_CH3	I/O	MFP12	BPWM1 channel 3 output/capture input.
				ACMP1_WLAT	I	MFP13	Analog comparator 1 window latch input pin
				TM3	I/O	MFP14	Timer3 event counter input/toggle output pin.
				INT0	I	MFP15	External interrupt 0 input pin.
		22	52	V_{SS}	P	MFP0	Ground pin for digital circuit.
		23	53	V_{DD}	P	MFP0	Power supply for I/O ports and LDO source for internal PLL and digital circuit.
		24	54	LDO_CAP	A	MFP0	LDO output pin. **Note:** This pin needs to be connected with an external capacitor.
	17	25	55	PA.5	I/O	MFP0	General purpose digital I/O pin.
				QSPI0_MISO1	I/O	MFP3	Quad SPI0 MISO1 (Master In, Slave Out) pin.
				SPI1_I2SMCLK	I/O	MFP4	SPI1 I^2S master clock output pin
				UART0_nCTS	I	MFP7	UART0 clear to Send input pin.
				UART5_TXD	O	MFP8	UART5 data transmitter output pin.
				I^2C0_SCL	I/O	MFP9	I^2C0 clock pin.
				CAN0_TXD	O	MFP10	CAN0 bus transmitter output.
				UART0_TXD	O	MFP11	UART0 data transmitter output pin.
				BPWM0_CH5	I/O	MFP12	BPWM0 channel 5 output/capture input.
				EPWM0_CH0	I/O	MFP13	EPWM0 channel 0 output/capture input.
				QEI0_INDEX	I	MFP14	Quadrature encoder 0 index input
	18	26	56	PA.4	I/O	MFP0	General purpose digital I/O pin.
				QSPI0_MOSI1	I/O	MFP3	Quad SPI0 MOSI1 (Master Out, Slave In) pin.
				SPI0_I2SMCLK	I/O	MFP4	SPI0 I^2S master clock output pin
				SC0_nCD	I	MFP6	Smart Card 0 card detect pin.
				UART0_nRTS	O	MFP7	UART0 request to Send output pin.
				UART5_RXD	I	MFP8	UART5 data receiver input pin.
				I^2C0_SDA	I/O	MFP9	I^2C0 data input/output pin.

32 Pin	48 Pin	64 Pin	128 Pin	Pin Name	Type	MFP	Description
				CAN0_RXD	I	MFP10	CAN0 bus receiver input.
				UART0_RXD	I	MFP11	UART0 data receiver input pin.
				BPWM0_CH4	I/O	MFP12	BPWM0 channel 4 output/capture input.
				EPWM0_CH1	I/O	MFP13	EPWM0 channel 1 output/capture input.
				QEI0_A	I	MFP14	Quadrature encoder 0 phase A input
11	19	27	57	PA.3	I/O	MFP0	General purpose digital I/O pin.
				QSPI0_SS	I/O	MFP3	Quad SPI0 slave select pin.
				SPI0_SS	I/O	MFP4	SPI0 slave select pin.
				SC0_PWR	O	MFP6	Smart Card 0 power pin.
				UART4_TXD	O	MFP7	UART4 data transmitter output pin.
				UART1_TXD	O	MFP8	UART1 data transmitter output pin.
				I^2C1_SCL	I/O	MFP9	I^2C1 clock pin.
				I^2C0_SMBAL	O	MFP10	I^2C0 SMBus SMBALTER pin
				BPWM0_CH3	I/O	MFP12	BPWM0 channel 3 output/capture input.
				EPWM0_CH2	I/O	MFP13	EPWM0 channel 2 output/capture input.
				QEI0_B	I	MFP14	Quadrature encoder 0 phase B input
				EPWM1_BRAKE1	I	MFP15	EPWM1 Brake 1 input pin.
12	20	28	58	PA.2	I/O	MFP0	General purpose digital I/O pin.
				QSPI0_CLK	I/O	MFP3	Quad SPI0 serial clock pin.
				SPI0_CLK	I/O	MFP4	SPI0 serial clock pin.
				SC0_RST	O	MFP6	Smart Card 0 reset pin.
				UART4_RXD	I	MFP7	UART4 data receiver input pin.
				UART1_RXD	I	MFP8	UART1 data receiver input pin.
				I^2C1_SDA	I/O	MFP9	I^2C1 data input/output pin.
				I^2C0_SMBSUS	O	MFP10	I^2C0 SMBus SMBSUS pin (PMBus CONTROL pin)
				BPWM0_CH2	I/O	MFP12	BPWM0 channel 2 output/capture input.
				EPWM0_CH3	I/O	MFP13	EPWM0 channel 3 output/capture input.
13	21	29	59	PA.1	I/O	MFP0	General purpose digital I/O pin.
				QSPI0_MISO0	I/O	MFP3	Quad SPI0 MISO0 (Master In, Slave Out) pin.
				SPI0_MISO	I/O	MFP4	SPI0 MISO (Master In, Slave Out) pin.
				SC0_DAT	I/O	MFP6	Smart Card 0 data pin.
				UART0_TXD	O	MFP7	UART0 data transmitter output pin.
				UART1_nCTS	I	MFP8	UART1 clear to Send input pin.
				I^2C2_SCL	I/O	MFP9	I^2C2 clock pin.

32 Pin	48 Pin	64 Pin	128 Pin	Pin Name	Type	MFP	Description
				CCAP_DATA7	I	MFP10	Camera capture data input bus bit 7.
				BPWM0_CH1	I/O	MFP12	BPWM0 channel 1 output/capture input.
				EPWM0_CH4	I/O	MFP13	EPWM0 channel 4 output/capture input.
14	22	30	60	PA.0	I/O	MFP0	General purpose digital I/O pin.
				QSPI0_MOSI0	I/O	MFP3	Quad SPI0 MOSI0 (Master Out, Slave In) pin.
				SPI0_MOSI	I/O	MFP4	SPI0 MOSI (Master Out, Slave In) pin.
				SC0_CLK	O	MFP6	Smart Card 0 clock pin.
				UART0_RXD	I	MFP7	UART0 data receiver input pin.
				UART1_nRTS	O	MFP8	UART1 request to Send output pin.
				I^2C2_SDA	I/O	MFP9	I^2C2 data input/output pin.
				CCAP_DATA6	I	MFP10	Camera capture data input bus bit 6.
				BPWM0_CH0	I/O	MFP12	BPWM0 channel 0 output/capture input.
				EPWM0_CH5	I/O	MFP13	EPWM0 channel 5 output/capture input.
				DAC0_ST	I	MFP15	DAC0 external trigger input.
15	23	31	61	V_{DDIO}	P	MFP0	Power supply for PA.0~PA.5.
			62	PE.14	I/O	MFP0	General purpose digital I/O pin.
				EBI_AD8	I/O	MFP2	EBI address/data bus bit 8.
				UART2_TXD	O	MFP3	UART2 data transmitter output pin.
				CAN0_TXD	O	MFP4	CAN0 bus transmitter output.
				UART6_TXD	O	MFP6	UART6 data transmitter output pin.
			63	PE.15	I/O	MFP0	General purpose digital I/O pin.
				EBI_AD9	I/O	MFP2	EBI address/data bus bit 9.
				UART2_RXD	I	MFP3	UART2 data receiver input pin.
				CAN0_RXD	I	MFP4	CAN0 bus receiver input.
				UART6_RXD	I	MFP6	UART6 data receiver input pin.
16	24	32	64	nRESET	I	MFP0	External reset input: active LOW, with an internal pull-up. Set this pin low reset to initial state. **Note:** It is recommended to use 10 kΩ pull-up resistor and 10 uF capacitor on nRESET pin.
17	25	33	65	PF.0	I/O	MFP0	General purpose digital I/O pin.
				UART1_TXD	O	MFP2	UART1 data transmitter output pin.
				I^2C1_SCL	I/O	MFP3	I^2C1 clock pin.
				UART0_TXD	O	MFP4	UART0 data transmitter output pin.
				BPWM1_CH0	I/O	MFP12	BPWM1 channel 0 output/capture input.
				ICE_DAT	I/O	MFP14	Serial wired debugger data pin. **Note:** It is recommended to use 100 kΩ pull-up resistor on

32 Pin	48 Pin	64 Pin	128 Pin	Pin Name	Type	MFP	Description
							ICE_DAT pin.
18	26	34	66	PF.1	I/O	MFP0	General purpose digital I/O pin.
				UART1_RXD	I	MFP2	UART1 data receiver input pin.
				I²C1_SDA	I/O	MFP3	I²C1 data input/output pin.
				UART0_RXD	I	MFP4	UART0 data receiver input pin.
				BPWM1_CH1	I/O	MFP12	BPWM1 channel 1 output/capture input.
				ICE_CLK	I/O	MFP14	Serial wired debugger clock pin. **Note:** It is recommended to use 100 kΩ pull-up resistor on ICE_CLK pin.
			67	PD.9	I/O	MFP0	General purpose digital I/O pin.
				EBI_AD7	I/O	MFP2	EBI address/data bus bit 7.
				I²C2_SCL	I/O	MFP3	I²C2 clock pin.
				UART2_nCTS	I	MFP4	UART2 clear to Send input pin.
				UART7_TXD	O	MFP5	UART7 data transmitter output pin.
				CAN2_TXD	O	MFP6	CAN2 bus transmitter output.
			68	PD.8	I/O	MFP0	General purpose digital I/O pin.
				EBI_AD6	I/O	MFP2	EBI address/data bus bit 6.
				I²C2_SDA	I/O	MFP3	I²C2 data input/output pin.
				UART2_nRTS	O	MFP4	UART2 request to Send output pin.
				UART7_RXD	I	MFP5	UART7 data receiver input pin.
				CAN2_RXD	I	MFP6	CAN2 bus receiver input.
	27	35	69	PC.5	I/O	MFP0	General purpose digital I/O pin.
				EBI_AD5	I/O	MFP2	EBI address/data bus bit 5.
				QSPI0_MISO1	I/O	MFP4	Quad SPI0 MISO1 (Master In, Slave Out) pin.
				UART2_TXD	O	MFP8	UART2 data transmitter output pin.
				I²C1_SCL	I/O	MFP9	I²C1 clock pin.
				CAN0_TXD	O	MFP10	CAN0 bus transmitter output.
				UART4_TXD	O	MFP11	UART4 data transmitter output pin.
				EPWM1_CH0	I/O	MFP12	EPWM1 channel 0 output/capture input.
				CCAP_DATA5	I	MFP13	Camera capture data input bus bit 5.
				QSPI1_SS	I/O	MFP14	Quad SPI1 slave select pin.
	28	36	70	PC.4	I/O	MFP0	General purpose digital I/O pin.
				EBI_AD4	I/O	MFP2	EBI address/data bus bit 4.
				QSPI0_MOSI1	I/O	MFP4	Quad SPI0 MOSI1 (Master Out, Slave In) pin.
				I²S0_BCLK	O	MFP6	I²S0 bit clock output pin.

32 Pin	48 Pin	64 Pin	128 Pin	Pin Name	Type	MFP	Description
				SPI1_I2SMCLK	I/O	MFP7	SPI1 I²S master clock output pin
				UART2_RXD	I	MFP8	UART2 data receiver input pin.
				I²C1_SDA	I/O	MFP9	I²C1 data input/output pin.
				CAN0_RXD	I	MFP10	CAN0 bus receiver input.
				UART4_RXD	I	MFP11	UART4 data receiver input pin.
				EPWM1_CH1	I/O	MFP12	EPWM1 channel 1 output/capture input.
				CCAP_DATA4	I	MFP13	Camera capture data input bus bit 4.
				QSPI1_CLK	I/O	MFP14	Quad SPI1 serial clock pin.
	29	37	71	PC.3	I/O	MFP0	General purpose digital I/O pin.
				EBI_AD3	I/O	MFP2	EBI address/data bus bit 3.
				QSPI0_SS	I/O	MFP4	Quad SPI0 slave select pin.
				I²S0_MCLK	O	MFP6	I²S0 master clock output pin.
				SPI1_MISO	I/O	MFP7	SPI1 MISO (Master In, Slave Out) pin.
				UART2_nRTS	O	MFP8	UART2 request to Send output pin.
				I²C0_SMBAL	O	MFP9	I²C0 SMBus SMBALTER pin
				CAN1_TXD	O	MFP10	CAN1 bus transmitter output.
				UART3_TXD	O	MFP11	UART3 data transmitter output pin.
				EPWM1_CH2	I/O	MFP12	EPWM1 channel 2 output/capture input.
				CCAP_DATA3	I	MFP13	Camera capture data input bus bit 3.
				QSPI1_MISO0	I/O	MFP14	Quad SPI1 MISO0 (Master In, Slave Out) pin.
	30	38	72	PC.2	I/O	MFP0	General purpose digital I/O pin.
				EBI_AD2	I/O	MFP2	EBI address/data bus bit 2.
				QSPI0_CLK	I/O	MFP4	Quad SPI0 serial clock pin.
				I²S0_DI	I	MFP6	I²S0 data input pin.
				SPI1_MOSI	I/O	MFP7	SPI1 MOSI (Master Out, Slave In) pin.
				UART2_nCTS	I	MFP8	UART2 clear to Send input pin.
				I²C0_SMBSUS	O	MFP9	I²C0 SMBus SMBSUS pin (PMBus CONTROL pin)
				CAN1_RXD	I	MFP10	CAN1 bus receiver input.
				UART3_RXD	I	MFP11	UART3 data receiver input pin.
				EPWM1_CH3	I/O	MFP12	EPWM1 channel 3 output/capture input.
				CCAP_DATA2	I	MFP13	Camera capture data input bus bit 2.
				QSPI1_MOSI0	I/O	MFP14	Quad SPI1 MOSI0 (Master Out, Slave In) pin.
19	31	39	73	PC.1	I/O	MFP0	General purpose digital I/O pin.
				EBI_AD1	I/O	MFP2	EBI address/data bus bit 1.

32 Pin	48 Pin	64 Pin	128 Pin	Pin Name	Type	MFP	Description
				QSPI0_MISO0	I/O	MFP4	Quad SPI0 MISO0 (Master In, Slave Out) pin.
				I^2S0_DO	O	MFP6	I^2S0 data output pin.
				SPI1_CLK	I/O	MFP7	SPI1 serial clock pin.
				UART2_TXD	O	MFP8	UART2 data transmitter output pin.
				I^2C0_SCL	I/O	MFP9	I^2C0 clock pin.
				CAN2_TXD	O	MFP10	CAN2 bus transmitter output.
				EPWM1_CH4	I/O	MFP12	EPWM1 channel 4 output/capture input.
				CCAP_DATA1	I	MFP13	Camera capture data input bus bit 1.
				ACMP0_O	O	MFP14	Analog comparator 0 output pin.
				EADC0_ST	I	MFP15	EADC0 external trigger input.
20	32	40	74	PC.0	I/O	MFP0	General purpose digital I/O pin.
				EBI_AD0	I/O	MFP2	EBI address/data bus bit 0.
				QSPI0_MOSI0	I/O	MFP4	Quad SPI0 MOSI0 (Master Out, Slave In) pin.
				I^2S0_LRCK	O	MFP6	I^2S0 left right channel clock output pin.
				SPI1_SS	I/O	MFP7	SPI1 slave select pin.
				UART2_RXD	I	MFP8	UART2 data receiver input pin.
				I^2C0_SDA	I/O	MFP9	I^2C0 data input/output pin.
				CAN2_RXD	I	MFP10	CAN2 bus receiver input.
				EPWM1_CH5	I/O	MFP12	EPWM1 channel 5 output/capture input.
				CCAP_DATA0	I	MFP13	Camera capture data input bus bit 0.
				ACMP1_O	O	MFP14	Analog comparator 1 output pin.
				EADC1_ST	I	MFP15	EADC1 external trigger input.
			75	V_{SS}	P	MFP0	Ground pin for digital circuit.
			76	V_{DD}	P	MFP0	Power supply for I/O ports and LDO source for internal PLL and digital circuit.
			77	PG.9	I/O	MFP0	General purpose digital I/O pin.
				EBI_AD0	I/O	MFP2	EBI address/data bus bit 0.
				QSPI1_MISO1	I/O	MFP5	Quad SPI1 MISO1 (Master In, Slave Out) pin.
				CCAP_PIXCLK	I	MFP7	Camera capture interface pix clock input pin.
				BPWM0_CH5	I/O	MFP12	BPWM0 channel 5 output/capture input.
			78	PG.10	I/O	MFP0	General purpose digital I/O pin.
				EBI_AD1	I/O	MFP2	EBI address/data bus bit 1.
				QSPI1_MOSI1	I/O	MFP5	Quad SPI1 MOSI1 (Master Out, Slave In) pin.
				CCAP_SCLK	O	MFP7	Camera capture interface sensor clock pin.

32 Pin	48 Pin	64 Pin	128 Pin	Pin Name	Type	MFP	Description
				BPWM0_CH4	I/O	MFP12	BPWM0 channel 4 output/capture input.
			79	PG.11	I/O	MFP0	General purpose digital I/O pin.
				EBI_AD2	I/O	MFP2	EBI address/data bus bit 2.
				QSPI1_SS	I/O	MFP5	Quad SPI1 slave select pin.
				UART7_TXD	O	MFP6	UART7 data transmitter output pin.
				CCAP_SFIELD	I	MFP7	Camera capture interface SFIELD input pin.
				BPWM0_CH3	I/O	MFP12	BPWM0 channel 3 output/capture input.
			80	PG.12	I/O	MFP0	General purpose digital I/O pin.
				EBI_AD3	I/O	MFP2	EBI address/data bus bit 3.
				QSPI1_CLK	I/O	MFP5	Quad SPI1 serial clock pin.
				UART7_RXD	I	MFP6	UART7 data receiver input pin.
				CCAP_VSYNC	I	MFP7	Camera capture interface vsync input pin.
				BPWM0_CH2	I/O	MFP12	BPWM0 channel 2 output/capture input.
			81	PG.13	I/O	MFP0	General purpose digital I/O pin.
				EBI_AD4	I/O	MFP2	EBI address/data bus bit 4.
				QSPI1_MISO0	I/O	MFP5	Quad SPI1 MISO0 (Master In, Slave Out) pin.
				UART6_TXD	O	MFP6	UART6 data transmitter output pin.
				CCAP_HSYNC	I	MFP7	Camera capture interface hsync input pin.
				BPWM0_CH1	I/O	MFP12	BPWM0 channel 1 output/capture input.
			82	PG.14	I/O	MFP0	General purpose digital I/O pin.
				EBI_AD5	I/O	MFP2	EBI address/data bus bit 5.
				QSPI1_MOSI0	I/O	MFP5	Quad SPI1 MOSI0 (Master Out, Slave In) pin.
				UART6_RXD	I	MFP6	UART6 data receiver input pin.
				BPWM0_CH0	I/O	MFP12	BPWM0 channel 0 output/capture input.
			83	PG.15	I/O	MFP0	General purpose digital I/O pin.
				CLKO	O	MFP14	Clock Out
				EADC0_ST	I	MFP15	EADC0 external trigger input.
		41		PD.3	I/O	MFP0	General purpose digital I/O pin.
				EBI_AD10	I/O	MFP2	EBI address/data bus bit 10.
				SPI0_SS	I/O	MFP4	SPI0 slave select pin.
				UART3_nRTS	O	MFP5	UART3 request to Send output pin.
				UART0_TXD	O	MFP9	UART0 data transmitter output pin.
		42		PD.2	I/O	MFP0	General purpose digital I/O pin.
				EBI_AD11	I/O	MFP2	EBI address/data bus bit 11.

32 Pin	48 Pin	64 Pin	128 Pin	Pin Name	Type	MFP	Description
				SPI0_CLK	I/O	MFP4	SPI0 serial clock pin.
				UART3_nCTS	I	MFP5	UART3 clear to Send input pin.
				UART0_RXD	I	MFP9	UART0 data receiver input pin.
		43		PD.1	I/O	MFP0	General purpose digital I/O pin.
				EBI_AD12	I/O	MFP2	EBI address/data bus bit 12.
				SPI0_MISO	I/O	MFP4	SPI0 MISO (Master In, Slave Out) pin.
				UART3_TXD	O	MFP5	UART3 data transmitter output pin.
				I^2C2_SCL	I/O	MFP6	I^2C2 clock pin.
		44		PD.0	I/O	MFP0	General purpose digital I/O pin.
				EBI_AD13	I/O	MFP2	EBI address/data bus bit 13.
				SPI0_MOSI	I/O	MFP4	SPI0 MOSI (Master Out, Slave In) pin.
				UART3_RXD	I	MFP5	UART3 data receiver input pin.
				I^2C2_SDA	I/O	MFP6	I^2C2 data input/output pin.
				TM2	I/O	MFP14	Timer2 event counter input/toggle output pin.
			84	PD.13	I/O	MFP0	General purpose digital I/O pin.
				EBI_AD10	I/O	MFP2	EBI address/data bus bit 10.
				SD0_nCD	I	MFP3	SD/SDIO0 card detect input pin
				SPI0_I2SMCLK	I/O	MFP4	SPI0 I^2S master clock output pin
				SPI1_I2SMCLK	I/O	MFP5	SPI1 I^2S master clock output pin
21	33	45	85	PA.12	I/O	MFP0	General purpose digital I/O pin.
				I^2S0_BCLK	O	MFP2	I^2S0 bit clock output pin.
				UART4_TXD	O	MFP3	UART4 data transmitter output pin.
				I^2C1_SCL	I/O	MFP4	I^2C1 clock pin.
				SPI2_SS	I/O	MFP5	SPI2 slave select pin.
				CAN0_TXD	O	MFP6	CAN0 bus transmitter output.
				BPWM1_CH2	I/O	MFP11	BPWM1 channel 2 output/capture input.
				QEI1_INDEX	I	MFP12	Quadrature encoder 1 index input
				USB_VBUS	P	MFP14	Power supply from USB host or HUB.
22	34	46	86	PA.13	I/O	MFP0	General purpose digital I/O pin.
				I^2S0_MCLK	O	MFP2	I^2S0 master clock output pin.
				UART4_RXD	I	MFP3	UART4 data receiver input pin.
				I^2C1_SDA	I/O	MFP4	I^2C1 data input/output pin.
				SPI2_CLK	I/O	MFP5	SPI2 serial clock pin.
				CAN0_RXD	I	MFP6	CAN0 bus receiver input.

32 Pin	48 Pin	64 Pin	128 Pin	Pin Name	Type	MFP	Description
				BPWM1_CH3	I/O	MFP11	BPWM1 channel 3 output/capture input.
				QEI1_A	I	MFP12	Quadrature encoder 1 phase A input
				USB_D-	A	MFP14	USB differential signal D-.
23	35	47	87	PA.14	I/O	MFP0	General purpose digital I/O pin.
				I^2S0_DI	I	MFP2	I^2S0 data input pin.
				UART0_TXD	O	MFP3	UART0 data transmitter output pin.
				SPI2_MISO	I/O	MFP5	SPI2 MISO (Master In, Slave Out) pin.
				I^2C2_SCL	I/O	MFP6	I^2C2 clock pin.
				BPWM1_CH4	I/O	MFP11	BPWM1 channel 4 output/capture input.
				QEI1_B	I	MFP12	Quadrature encoder 1 phase B input
				USB_D+	A	MFP14	USB differential signal D+.
24	36	48	88	PA.15	I/O	MFP0	General purpose digital I/O pin.
				I^2S0_DO	O	MFP2	I^2S0 data output pin.
				UART0_RXD	I	MFP3	UART0 data receiver input pin.
				SPI2_MOSI	I/O	MFP5	SPI2 MOSI (Master Out, Slave In) pin.
				I^2C2_SDA	I/O	MFP6	I^2C2 data input/output pin.
				BPWM1_CH5	I/O	MFP11	BPWM1 channel 5 output/capture input.
				EPWM0_SYNC_IN	I	MFP12	EPWM0 counter synchronous trigger input pin.
				USB_OTG_ID	I	MFP14	USB_ identification.
			89	NC	-	MFP0	No connect pin, leave floating.
			90	NC	-	MFP0	No connect pin, leave floating.
			91	NC	-	MFP0	No connect pin, leave floating.
			92	NC	-	MFP0	No connect pin, leave floating.
			93	NC	-	MFP0	No connect pin, leave floating.
			94	NC	-	MFP0	No connect pin, leave floating.
			95	NC	-	MFP0	No connect pin, leave floating.
			96	NC	-	MFP0	No connect pin, leave floating.
			97	PE.7	I/O	MFP0	General purpose digital I/O pin.
				SD0_CMD	I/O	MFP3	SD/SDIO0 command/response pin
				UART5_TXD	O	MFP8	UART5 data transmitter output pin.
				CAN1_TXD	O	MFP9	CAN1 bus transmitter output.
				QEI1_INDEX	I	MFP11	Quadrature encoder 1 index input
				EPWM0_CH0	I/O	MFP12	EPWM0 channel 0 output/capture input.
				BPWM0_CH5	I/O	MFP13	BPWM0 channel 5 output/capture input.

32 Pin	48 Pin	64 Pin	128 Pin	Pin Name	Type	MFP	Description
			98	PE.6	I/O	MFP0	General purpose digital I/O pin.
				SD0_CLK	O	MFP3	SD/SDIO0 clock output pin
				SC0_nCD	I	MFP6	Smart Card 0 card detect pin.
				UART5_RXD	I	MFP8	UART5 data receiver input pin.
				CAN1_RXD	I	MFP9	CAN1 bus receiver input.
				QEI1_A	I	MFP11	Quadrature encoder 1 phase A input
				EPWM0_CH1	I/O	MFP12	EPWM0 channel 1 output/capture input.
				BPWM0_CH4	I/O	MFP13	BPWM0 channel 4 output/capture input.
			99	PE.5	I/O	MFP0	General purpose digital I/O pin.
				EBI_nRD	O	MFP2	EBI read enable output pin.
				SD0_DAT3	I/O	MFP3	SD/SDIO0 data line bit 3.
				SC0_PWR	O	MFP6	Smart Card 0 power pin.
				UART6_TXD	O	MFP8	UART6 data transmitter output pin.
				UART7_nRTS	O	MFP9	UART7 request to Send output pin.
				QEI1_B	I	MFP11	Quadrature encoder 1 phase B input
				EPWM0_CH2	I/O	MFP12	EPWM0 channel 2 output/capture input.
				BPWM0_CH3	I/O	MFP13	BPWM0 channel 3 output/capture input.
			100	PE.4	I/O	MFP0	General purpose digital I/O pin.
				EBI_nWR	O	MFP2	EBI write enable output pin.
				SD0_DAT2	I/O	MFP3	SD/SDIO0 data line bit 2.
				SC0_RST	O	MFP6	Smart Card 0 reset pin.
				UART6_RXD	I	MFP8	UART6 data receiver input pin.
				UART7_nCTS	I	MFP9	UART7 clear to Send input pin.
				QEI0_INDEX	I	MFP11	Quadrature encoder 0 index input
				EPWM0_CH3	I/O	MFP12	EPWM0 channel 3 output/capture input.
				BPWM0_CH2	I/O	MFP13	BPWM0 channel 2 output/capture input.
			101	PE.3	I/O	MFP0	General purpose digital I/O pin.
				EBI_MCLK	O	MFP2	EBI external clock output pin.
				SD0_DAT1	I/O	MFP3	SD/SDIO0 data line bit 1.
				SC0_DAT	I/O	MFP6	Smart Card 0 data pin.
				UART6_nRTS	O	MFP8	UART6 request to Send output pin.
				UART7_TXD	O	MFP9	UART7 data transmitter output pin.
				QEI0_A	I	MFP11	Quadrature encoder 0 phase A input
				EPWM0_CH4	I/O	MFP12	EPWM0 channel 4 output/capture input.

32 Pin	48 Pin	64 Pin	128 Pin	Pin Name	Type	MFP	Description
				BPWM0_CH1	I/O	MFP13	BPWM0 channel 1 output/capture input.
			102	PE.2	I/O	MFP0	General purpose digital I/O pin.
				EBI_ALE	O	MFP2	EBI address latch enable output pin.
				SD0_DAT0	I/O	MFP3	SD/SDIO0 data line bit 0.
				SC0_CLK	O	MFP6	Smart Card 0 clock pin.
				UART6_nCTS	I	MFP8	UART6 clear to Send input pin.
				UART7_RXD	I	MFP9	UART7 data receiver input pin.
				QEI0_B	I	MFP11	Quadrature encoder 0 phase B input
				EPWM0_CH5	I/O	MFP12	EPWM0 channel 5 output/capture input.
				BPWM0_CH0	I/O	MFP13	BPWM0 channel 0 output/capture input.
			103	V_{SS}	P	MFP0	Ground pin for digital circuit.
			104	V_{DD}	P	MFP0	Power supply for I/O ports and LDO source for internal PLL and digital circuit.
			105	PE.1	I/O	MFP0	General purpose digital I/O pin.
				EBI_AD10	I/O	MFP2	EBI address/data bus bit 10.
				QSPI0_MISO0	I/O	MFP3	Quad SPI0 MISO0 (Master In, Slave Out) pin.
				I^2S0_BCLK	O	MFP5	I^2S0 bit clock output pin.
				SPI1_MISO	I/O	MFP6	SPI1 MISO (Master In, Slave Out) pin.
				UART3_TXD	O	MFP7	UART3 data transmitter output pin.
				I^2C1_SCL	I/O	MFP8	I^2C1 clock pin.
				UART4_nCTS	I	MFP9	UART4 clear to Send input pin.
			106	PE.0	I/O	MFP0	General purpose digital I/O pin.
				EBI_AD11	I/O	MFP2	EBI address/data bus bit 11.
				QSPI0_MOSI0	I/O	MFP3	Quad SPI0 MOSI0 (Master Out, Slave In) pin.
				I^2S0_MCLK	O	MFP5	I^2S0 master clock output pin.
				SPI1_MOSI	I/O	MFP6	SPI1 MOSI (Master Out, Slave In) pin.
				UART3_RXD	I	MFP7	UART3 data receiver input pin.
				I^2C1_SDA	I/O	MFP8	I^2C1 data input/output pin.
				UART4_nRTS	O	MFP9	UART4 request to Send output pin.
			107	PH.8	I/O	MFP0	General purpose digital I/O pin.
				EBI_AD12	I/O	MFP2	EBI address/data bus bit 12.
				QSPI0_CLK	I/O	MFP3	Quad SPI0 serial clock pin.
				I^2S0_DI	I	MFP5	I^2S0 data input pin.
				SPI1_CLK	I/O	MFP6	SPI1 serial clock pin.

32 Pin	48 Pin	64 Pin	128 Pin	Pin Name	Type	MFP	Description
				UART3_nRTS	O	MFP7	UART3 request to Send output pin.
				I²C1_SMBAL	O	MFP8	I²C1 SMBus SMBALTER pin
				I²C2_SCL	I/O	MFP9	I²C2 clock pin.
				UART1_TXD	O	MFP10	UART1 data transmitter output pin.
			108	PH.9	I/O	MFP0	General purpose digital I/O pin.
				EBI_AD13	I/O	MFP2	EBI address/data bus bit 13.
				QSPI0_SS	I/O	MFP3	Quad SPI0 slave select pin.
				I²S0_DO	O	MFP5	I²S0 data output pin.
				SPI1_SS	I/O	MFP6	SPI1 slave select pin.
				UART3_nCTS	I	MFP7	UART3 clear to Send input pin.
				I²C1_SMBSUS	O	MFP8	I²C1 SMBus SMBSUS pin (PMBus CONTROL pin)
				I²C2_SDA	I/O	MFP9	I²C2 data input/output pin.
				UART1_RXD	I	MFP10	UART1 data receiver input pin.
			109	PH.10	I/O	MFP0	General purpose digital I/O pin.
				EBI_AD14	I/O	MFP2	EBI address/data bus bit 14.
				QSPI0_MISO1	I/O	MFP3	Quad SPI0 MISO1 (Master In, Slave Out) pin.
				I²S0_LRCK	O	MFP5	I²S0 left right channel clock output pin.
				SPI1_I2SMCLK	I/O	MFP6	SPI1 I²S master clock output pin
				UART4_TXD	O	MFP7	UART4 data transmitter output pin.
				UART0_TXD	O	MFP8	UART0 data transmitter output pin.
			110	PH.11	I/O	MFP0	General purpose digital I/O pin.
				EBI_AD15	I/O	MFP2	EBI address/data bus bit 15.
				QSPI0_MOSI1	I/O	MFP3	Quad SPI0 MOSI1 (Master Out, Slave In) pin.
				UART4_RXD	I	MFP7	UART4 data receiver input pin.
				UART0_RXD	I	MFP8	UART0 data receiver input pin.
				EPWM0_CH5	I/O	MFP11	EPWM0 channel 5 output/capture input.
			111	PD.14	I/O	MFP0	General purpose digital I/O pin.
				EBI_nCS0	O	MFP2	EBI chip select 0 output pin.
				SPI0_I2SMCLK	I/O	MFP5	SPI0 I²S master clock output pin
				EPWM0_CH4	I/O	MFP11	EPWM0 channel 4 output/capture input.
25	37	49	112	V_{SS}	P	MFP0	Ground pin for digital circuit.
26	38	50	113	LDO_CAP	A	MFP0	LDO output pin. **Note:** This pin needs to be connected with an external capacitor.
27	39	51	114	V_{DD}	P	MFP0	Power supply for I/O ports and LDO source for internal PLL

32 Pin	48 Pin	64 Pin	128 Pin	Pin Name	Type	MFP	Description
							and digital circuit.
	40	52	115	PC.14	I/O	MFP0	General purpose digital I/O pin.
				EBI_AD11	I/O	MFP2	EBI address/data bus bit 11.
				SPI0_I2SMCLK	I/O	MFP4	SPI0 I^2S master clock output pin
				QSPI0_CLK	I/O	MFP6	Quad SPI0 serial clock pin.
				EPWM0_SYNC_IN	I	MFP11	EPWM0 counter synchronous trigger input pin.
				ETM_TRACE_CLK	I	MFP12	ETM receiver Trace Clock input pin
				TM1	I/O	MFP13	Timer1 event counter input/toggle output pin.
				USB_VBUS_ST	I	MFP14	USB external V_{BUS} regulator status pin.
28	41	53	116	PB.15	I/O	MFP0	General purpose digital I/O pin.
				EADC0_CH15	A	MFP1	EADC0 channel 15 analog input.
				EADC1_CH15	A	MFP1	EADC1 channel 15 analog input.
				EBI_AD12	I/O	MFP2	EBI address/data bus bit 12.
				SPI0_SS	I/O	MFP4	SPI0 slave select pin.
				UART0_nCTS	I	MFP6	UART0 clear to Send input pin.
				UART3_TXD	O	MFP7	UART3 data transmitter output pin.
				I^2C2_SMBAL	O	MFP8	I^2C2 SMBus SMBALTER pin
				EPWM0_BRAKE1	I	MFP10	EPWM0 Brake 1 input pin.
				EPWM1_CH0	I/O	MFP11	EPWM1 channel 0 output/capture input.
				ETM_TRACE_DATA0	I	MFP12	ETM receiver Trace Data 0 input pin
				TM0_EXT	I/O	MFP13	Timer0 external capture input/toggle output pin.
				USB_VBUS_EN	O	MFP14	USB external V_{BUS} regulator enable pin.
29	42	54	117	PB.14	I/O	MFP0	General purpose digital I/O pin.
				EADC0_CH14	A	MFP1	EADC0 channel 14 analog input.
				EADC1_CH14	A	MFP1	EADC1 channel 14 analog input.
				EBI_AD13	I/O	MFP2	EBI address/data bus bit 13.
				SPI0_CLK	I/O	MFP4	SPI0 serial clock pin.
				UART0_nRTS	O	MFP6	UART0 request to Send output pin.
				UART3_RXD	I	MFP7	UART3 data receiver input pin.
				I^2C2_SMBSUS	O	MFP8	I^2C2 SMBus SMBSUS pin (PMBus CONTROL pin)
				EPWM1_CH1	I/O	MFP11	EPWM1 channel 1 output/capture input.
				ETM_TRACE_DATA1	I	MFP12	ETM receiver Trace Data 1 input pin
				TM1_EXT	I/O	MFP13	Timer1 external capture input/toggle output pin.
				CLKO	O	MFP14	Clock Out

32 Pin	48 Pin	64 Pin	128 Pin	Pin Name	Type	MFP	Description
				USB_VBUS_ST	I	MFP15	USB external V_{BUS} regulator status pin.
30	43	55	118	PB.13	I/O	MFP0	General purpose digital I/O pin.
				EADC0_CH13	A	MFP1	EADC0 channel 13 analog input.
				EADC1_CH13	A	MFP1	EADC1 channel 13 analog input.
				ACMP0_P3	A	MFP1	Analog comparator 0 positive input 3 pin.
				ACMP1_P3	A	MFP1	Analog comparator 1 positive input 3 pin.
				EBI_AD14	I/O	MFP2	EBI address/data bus bit 14.
				SPI0_MISO	I/O	MFP4	SPI0 MISO (Master In, Slave Out) pin.
				UART0_TXD	O	MFP6	UART0 data transmitter output pin.
				UART3_nRTS	O	MFP7	UART3 request to Send output pin.
				I^2C2_SCL	I/O	MFP8	I^2C2 clock pin.
				CCAP_PIXCLK	I	MFP10	Camera capture interface pix clock input pin.
				EPWM1_CH2	I/O	MFP11	EPWM1 channel 2 output/capture input.
				ETM_TRACE_DATA2	I	MFP12	ETM receiver Trace Data 2 input pin
				TM2_EXT	I/O	MFP13	Timer2 external capture input/toggle output pin.
31	44	56	119	PB.12	I/O	MFP0	General purpose digital I/O pin.
				EADC0_CH12	A	MFP1	EADC0 channel 12 analog input.
				EADC1_CH12	A	MFP1	EADC1 channel 12 analog input.
				DAC0_OUT	A	MFP1	DAC0 channel analog output.
				ACMP0_P2	A	MFP1	Analog comparator 0 positive input 2 pin.
				ACMP1_P2	A	MFP1	Analog comparator 1 positive input 2 pin.
				EBI_AD15	I/O	MFP2	EBI address/data bus bit 15.
				SPI0_MOSI	I/O	MFP4	SPI0 MOSI (Master Out, Slave In) pin.
				UART0_RXD	I	MFP6	UART0 data receiver input pin.
				UART3_nCTS	I	MFP7	UART3 clear to Send input pin.
				I^2C2_SDA	I/O	MFP8	I^2C2 data input/output pin.
				SD0_nCD	I	MFP9	SD/SDIO0 card detect input pin
				CCAP_SCLK	O	MFP10	Camera capture interface sensor clock pin.
				EPWM1_CH3	I/O	MFP11	EPWM1 channel 3 output/capture input.
				ETM_TRACE_DATA3	I	MFP12	ETM receiver Trace Data 3 input pin
				TM3_EXT	I/O	MFP13	Timer3 external capture input/toggle output pin.
32	45	57	120	AV_{DD}	P	MFP0	Power supply for internal analog circuit.
		58	121	V_{REF}	A	MFP0	ADC reference voltage input. **Note:** This pin needs to be connected with a 1uF capacitor.

32 Pin	48 Pin	64 Pin	128 Pin	Pin Name	Type	MFP	Description
	46	59	122	AV_{SS}	P	MFP0	Ground pin for analog circuit.
		60	123	PB.11	I/O	MFP0	General purpose digital I/O pin.
				EADC0_CH11	A	MFP1	EADC0 channel 11 analog input.
				EBI_ADR16	O	MFP2	EBI address bus bit 16.
				UART0_nCTS	I	MFP5	UART0 clear to Send input pin.
				UART4_TXD	O	MFP6	UART4 data transmitter output pin.
				I^2C1_SCL	I/O	MFP7	I^2C1 clock pin.
				CAN0_TXD	O	MFP8	CAN0 bus transmitter output.
				SPI0_I2SMCLK	I/O	MFP9	SPI0 I^2S master clock output pin
				BPWM1_CH0	I/O	MFP10	BPWM1 channel 0 output/capture input.
				CCAP_SFIELD	I	MFP12	Camera capture interface SFIELD input pin.
		61	124	PB.10	I/O	MFP0	General purpose digital I/O pin.
				EADC0_CH10	A	MFP1	EADC0 channel 10 analog input.
				EBI_ADR17	O	MFP2	EBI address bus bit 17.
				UART0_nRTS	O	MFP5	UART0 request to Send output pin.
				UART4_RXD	I	MFP6	UART4 data receiver input pin.
				I^2C1_SDA	I/O	MFP7	I^2C1 data input/output pin.
				CAN0_RXD	I	MFP8	CAN0 bus receiver input.
				BPWM1_CH1	I/O	MFP10	BPWM1 channel 1 output/capture input.
				CCAP_VSYNC	I	MFP12	Camera capture interface vsync input pin.
		62	125	PB.9	I/O	MFP0	General purpose digital I/O pin.
				EADC0_CH9	A	MFP1	EADC0 channel 9 analog input.
				EBI_ADR18	O	MFP2	EBI address bus bit 18.
				UART0_TXD	O	MFP5	UART0 data transmitter output pin.
				UART1_nCTS	I	MFP6	UART1 clear to Send input pin.
				I^2C1_SMBAL	O	MFP7	I^2C1 SMBus SMBALTER pin
				UART7_TXD	O	MFP8	UART7 data transmitter output pin.
				I^2C0_SCL	I/O	MFP9	I^2C0 clock pin.
				BPWM1_CH2	I/O	MFP10	BPWM1 channel 2 output/capture input.
				CAN2_TXD	O	MFP12	CAN2 bus transmitter output.
				INT7	I	MFP13	External interrupt 7 input pin.
				CCAP_HSYNC	I	MFP14	Camera capture interface hsync input pin.
		63	126	PB.8	I/O	MFP0	General purpose digital I/O pin.
				EADC0_CH8	A	MFP1	EADC0 channel 8 analog input.

32 Pin	48 Pin	64 Pin	128 Pin	Pin Name	Type	MFP	Description
				EBI_ADR19	O	MFP2	EBI address bus bit 19.
				UART0_RXD	I	MFP5	UART0 data receiver input pin.
				UART1_nRTS	O	MFP6	UART1 request to Send output pin.
				I²C1_SMBSUS	O	MFP7	I²C1 SMBus SMBSUS pin (PMBus CONTROL pin)
				UART7_RXD	I	MFP8	UART7 data receiver input pin.
				I²C0_SDA	I/O	MFP9	I²C0 data input/output pin.
				BPWM1_CH3	I/O	MFP10	BPWM1 channel 3 output/capture input.
				CAN2_RXD	I	MFP12	CAN2 bus receiver input.
				INT6	I	MFP13	External interrupt 6 input pin.
	47	64	127	PB.7	I/O	MFP0	General purpose digital I/O pin.
				EADC0_CH7	A	MFP1	EADC0 channel 7 analog input.
				EBI_nWRL	O	MFP2	EBI low byte write enable output pin.
				CAN1_TXD	O	MFP5	CAN1 bus transmitter output.
				UART1_TXD	O	MFP6	UART1 data transmitter output pin.
				EBI_nCS0	O	MFP8	EBI chip select 0 output pin.
				BPWM1_CH4	I/O	MFP10	BPWM1 channel 4 output/capture input.
				EPWM1_BRAKE0	I	MFP11	EPWM1 Brake 0 input pin.
				EPWM1_CH4	I/O	MFP12	EPWM1 channel 4 output/capture input.
				INT5	I	MFP13	External interrupt 5 input pin.
				USB_VBUS_ST	I	MFP14	USB external V_{BUS} regulator status pin.
				ACMP0_O	O	MFP15	Analog comparator 0 output pin.
	48	1	128	PB.6	I/O	MFP0	General purpose digital I/O pin.
				EADC0_CH6	A	MFP1	EADC0 channel 6 analog input.
				EBI_nWRH	O	MFP2	EBI high byte write enable output pin
				CAN1_RXD	I	MFP5	CAN1 bus receiver input.
				UART1_RXD	I	MFP6	UART1 data receiver input pin.
				EBI_nCS1	O	MFP8	EBI chip select 1 output pin.
				BPWM1_CH5	I/O	MFP10	BPWM1 channel 5 output/capture input.
				EPWM1_BRAKE1	I	MFP11	EPWM1 Brake 1 input pin.
				EPWM1_CH5	I/O	MFP12	EPWM1 channel 5 output/capture input.
				INT4	I	MFP13	External interrupt 4 input pin.
				USB_VBUS_EN	O	MFP14	USB external V_{BUS} regulator enable pin.
				ACMP1_O	O	MFP15	Analog comparator 1 output pin.

4.3.3 M483 Series Pin Description

Note: PA.15 MFP can only be as USB_OTG_ID when enable full-Speed USB.

64 Pin	128 Pin	Pin Name	Type	MFP	Description
2	1	PB.5	I/O	MFP0	General purpose digital I/O pin.
		EADC0_CH5	A	MFP1	EADC0 channel 5 analog input.
		ACMP1_N	A	MFP1	Analog comparator 1 negative input pin.
		EBI_ADR0	O	MFP2	EBI address bus bit 0.
		SD0_DAT3	I/O	MFP3	SD/SDIO0 data line bit 3.
		SPI1_MISO	I/O	MFP5	SPI1 MISO (Master In, Slave Out) pin.
		I^2C0_SCL	I/O	MFP6	I^2C0 clock pin.
		UART5_TXD	O	MFP7	UART5 data transmitter output pin.
		SC0_CLK	O	MFP9	Smart Card 0 clock pin.
		I^2S0_BCLK	O	MFP10	I^2S0 bit clock output pin.
		EPWM0_CH0	I/O	MFP11	EPWM0 channel 0 output/capture input.
		UART2_TXD	O	MFP12	UART2 data transmitter output pin.
		TM0	I/O	MFP14	Timer0 event counter input/toggle output pin.
		INT0	I	MFP15	External interrupt 0 input pin.
3	2	PB.4	I/O	MFP0	General purpose digital I/O pin.
		EADC0_CH4	A	MFP1	EADC0 channel 4 analog input.
		ACMP1_P1	A	MFP1	Analog comparator 1 positive input 1 pin.
		EBI_ADR1	O	MFP2	EBI address bus bit 1.
		SD0_DAT2	I/O	MFP3	SD/SDIO0 data line bit 2.
		SPI1_MOSI	I/O	MFP5	SPI1 MOSI (Master Out, Slave In) pin.
		I^2C0_SDA	I/O	MFP6	I^2C0 data input/output pin.
		UART5_RXD	I	MFP7	UART5 data receiver input pin.
		SC0_DAT	I/O	MFP9	Smart Card 0 data pin.
		I^2S0_MCLK	O	MFP10	I^2S0 master clock output pin.
		EPWM0_CH1	I/O	MFP11	EPWM0 channel 1 output/capture input.
		UART2_RXD	I	MFP12	UART2 data receiver input pin.
		TM1	I/O	MFP14	Timer1 event counter input/toggle output pin.
		INT1	I	MFP15	External interrupt 1 input pin.
4	3	PB.3	I/O	MFP0	General purpose digital I/O pin.
		EADC0_CH3	A	MFP1	EADC0 channel 3 analog input.
		EADC1_CH11	A	MFP1	EADC1 channel 11 analog input.
		ACMP0_N	A	MFP1	Analog comparator 0 negative input pin.

64 Pin	128 Pin	Pin Name	Type	MFP	Description
		EBI_ADR2	O	MFP2	EBI address bus bit 2.
		SD0_DAT1	I/O	MFP3	SD/SDIO0 data line bit 1.
		SPI1_CLK	I/O	MFP5	SPI1 serial clock pin.
		UART1_TXD	O	MFP6	UART1 data transmitter output pin.
		UART5_nRTS	O	MFP7	UART5 request to Send output pin.
		SC0_RST	O	MFP9	Smart Card 0 reset pin.
		I^2S0_DI	I	MFP10	I^2S0 data input pin.
		EPWM0_CH2	I/O	MFP11	EPWM0 channel 2 output/capture input.
		I^2C1_SCL	I/O	MFP12	I^2C1 clock pin.
		TM2	I/O	MFP14	Timer2 event counter input/toggle output pin.
		INT2	I	MFP15	External interrupt 2 input pin.
5	4	PB.2	I/O	MFP0	General purpose digital I/O pin.
		EADC0_CH2	A	MFP1	EADC0 channel 2 analog input.
		EADC1_CH10	A	MFP1	EADC1 channel 10 analog input.
		ACMP0_P1	A	MFP1	Analog comparator 0 positive input 1 pin.
		EBI_ADR3	O	MFP2	EBI address bus bit 3.
		SD0_DAT0	I/O	MFP3	SD/SDIO0 data line bit 0.
		SPI1_SS	I/O	MFP5	SPI1 slave select pin.
		UART1_RXD	I	MFP6	UART1 data receiver input pin.
		UART5_nCTS	I	MFP7	UART5 clear to Send input pin.
		SC0_PWR	O	MFP9	Smart Card 0 power pin.
		I^2S0_DO	O	MFP10	I^2S0 data output pin.
		EPWM0_CH3	I/O	MFP11	EPWM0 channel 3 output/capture input.
		I^2C1_SDA	I/O	MFP12	I^2C1 data input/output pin.
		TM3	I/O	MFP14	Timer3 event counter input/toggle output pin.
		INT3	I	MFP15	External interrupt 3 input pin.
	5	PC.12	I/O	MFP0	General purpose digital I/O pin.
		EBI_ADR4	O	MFP2	EBI address bus bit 4.
		UART0_TXD	O	MFP3	UART0 data transmitter output pin.
		I^2C0_SCL	I/O	MFP4	I^2C0 clock pin.
		UART6_TXD	O	MFP5	UART6 data transmitter output pin.
		SC0_nCD	I	MFP9	Smart Card 0 card detect pin.
		ECAP1_IC2	I	MFP11	Enhanced capture unit 1 input 2 pin.
		EPWM1_CH0	I/O	MFP12	EPWM1 channel 0 output/capture input.

64 Pin	128 Pin	Pin Name	Type	MFP	Description
		ACMP0_O	O	MFP14	Analog comparator 0 output pin.
	6	PC.11	I/O	MFP0	General purpose digital I/O pin.
		EBI_ADR5	O	MFP2	EBI address bus bit 5.
		UART0_RXD	I	MFP3	UART0 data receiver input pin.
		I^2C0_SDA	I/O	MFP4	I^2C0 data input/output pin.
		UART6_RXD	I	MFP5	UART6 data receiver input pin.
		ECAP1_IC1	I	MFP11	Enhanced capture unit 1 input 1 pin.
		EPWM1_CH1	I/O	MFP12	EPWM1 channel 1 output/capture input.
		ACMP1_O	O	MFP14	Analog comparator 1 output pin.
	7	PC.10	I/O	MFP0	General purpose digital I/O pin.
		EBI_ADR6	O	MFP2	EBI address bus bit 6.
		UART6_nRTS	O	MFP5	UART6 request to Send output pin.
		UART3_TXD	O	MFP7	UART3 data transmitter output pin.
		CAN1_TXD	O	MFP9	CAN1 bus transmitter output.
		ECAP1_IC0	I	MFP11	Enhanced capture unit 1 input 0 pin.
		EPWM1_CH2	I/O	MFP12	EPWM1 channel 2 output/capture input.
		EADC1_ST	I	MFP14	EADC1 external trigger input.
	8	PC.9	I/O	MFP0	General purpose digital I/O pin.
		EBI_ADR7	O	MFP2	EBI address bus bit 7.
		UART6_nCTS	I	MFP5	UART6 clear to Send input pin.
		UART3_RXD	I	MFP7	UART3 data receiver input pin.
		CAN1_RXD	I	MFP9	CAN1 bus receiver input.
		EPWM1_CH3	I/O	MFP12	EPWM1 channel 3 output/capture input.
		EADC1_ST	I	MFP14	EADC1 external trigger input.
6	9	PB.1	I/O	MFP0	General purpose digital I/O pin.
		EADC0_CH1	A	MFP1	EADC0 channel 1 analog input.
		EADC1_CH9	A	MFP1	EADC1 channel 9 analog input.
		EBI_ADR8	O	MFP2	EBI address bus bit 8.
		SD0_CLK	O	MFP3	SD/SDIO0 clock output pin
		SPI1_I2SMCLK	I/O	MFP5	SPI1 I^2S master clock output pin
		UART2_TXD	O	MFP7	UART2 data transmitter output pin.
		I^2C1_SCL	I/O	MFP9	I^2C1 clock pin.
		I^2S0_LRCK	O	MFP10	I^2S0 left right channel clock output pin.
		EPWM0_CH4	I/O	MFP11	EPWM0 channel 4 output/capture input.

64 Pin	128 Pin	Pin Name	Type	MFP	Description
		EPWM1_CH4	I/O	MFP12	EPWM1 channel 4 output/capture input.
		EPWM0_BRAKE0	I	MFP13	EPWM0 Brake 0 input pin.
7	10	PB.0	I/O	MFP0	General purpose digital I/O pin.
		EADC0_CH0	A	MFP1	EADC0 channel 0 analog input.
		EADC1_CH8	A	MFP1	EADC1 channel 8 analog input.
		EBI_ADR9	O	MFP2	EBI address bus bit 9.
		SD0_CMD	I/O	MFP3	SD/SDIO0 command/response pin
		SPI2_I2SMCLK	I/O	MFP4	SPI2 I^2S master clock output pin
		UART2_RXD	I	MFP7	UART2 data receiver input pin.
		SPI0_I2SMCLK	I/O	MFP8	SPI0 I^2S master clock output pin
		I^2C1_SDA	I/O	MFP9	I^2C1 data input/output pin.
		EPWM0_CH5	I/O	MFP11	EPWM0 channel 5 output/capture input.
		EPWM1_CH5	I/O	MFP12	EPWM1 channel 5 output/capture input.
		EPWM0_BRAKE1	I	MFP13	EPWM0 Brake 1 input pin.
	11	V_{SS}	P	MFP0	Ground pin for digital circuit.
	12	V_{DD}	P	MFP0	Power supply for I/O ports and LDO source for internal PLL and digital circuit.
8	13	PA.11	I/O	MFP0	General purpose digital I/O pin.
		EADC1_CH7	A	MFP1	EADC1 channel 7 analog input.
		ACMP0_P0	A	MFP1	Analog comparator 0 positive input 0 pin.
		EBI_nRD	O	MFP2	EBI read enable output pin.
		SPI2_SS	I/O	MFP4	SPI2 slave select pin.
		I^2C2_SCL	I/O	MFP7	I^2C2 clock pin.
		UART6_TXD	O	MFP8	UART6 data transmitter output pin.
		BPWM0_CH0	I/O	MFP9	BPWM0 channel 0 output/capture input.
		EPWM0_SYNC_OUT	O	MFP10	EPWM0 counter synchronous trigger output pin.
		TM0_EXT	I/O	MFP13	Timer0 external capture input/toggle output pin.
9	14	PA.10	I/O	MFP0	General purpose digital I/O pin.
		EADC1_CH6	A	MFP1	EADC1 channel 6 analog input.
		ACMP1_P0	A	MFP1	Analog comparator 1 positive input 0 pin.
		EBI_nWR	O	MFP2	EBI write enable output pin.
		SPI2_CLK	I/O	MFP4	SPI2 serial clock pin.
		I^2C2_SDA	I/O	MFP7	I^2C2 data input/output pin.
		UART6_RXD	I	MFP8	UART6 data receiver input pin.

64 Pin	128 Pin	Pin Name	Type	MFP	Description
		BPWM0_CH1	I/O	MFP9	BPWM0 channel 1 output/capture input.
		QEI1_INDEX	I	MFP10	Quadrature encoder 1 index input
		ECAP0_IC0	I	MFP11	Enhanced capture unit 0 input 0 pin.
		TM1_EXT	I/O	MFP13	Timer1 external capture input/toggle output pin.
		DAC0_ST	I	MFP14	DAC0 external trigger input.
10	15	PA.9	I/O	MFP0	General purpose digital I/O pin.
		EADC1_CH5	A	MFP1	EADC1 channel 5 analog input.
		EBI_MCLK	O	MFP2	EBI external clock output pin.
		SPI2_MISO	I/O	MFP4	SPI2 MISO (Master In, Slave Out) pin.
		UART1_TXD	O	MFP7	UART1 data transmitter output pin.
		UART7_TXD	O	MFP8	UART7 data transmitter output pin.
		BPWM0_CH2	I/O	MFP9	BPWM0 channel 2 output/capture input.
		QEI1_A	I	MFP10	Quadrature encoder 1 phase A input
		ECAP0_IC1	I	MFP11	Enhanced capture unit 0 input 1 pin.
		TM2_EXT	I/O	MFP13	Timer2 external capture input/toggle output pin.
11	16	PA.8	I/O	MFP0	General purpose digital I/O pin.
		EADC1_CH4	A	MFP1	EADC1 channel 4 analog input.
		EBI_ALE	O	MFP2	EBI address latch enable output pin.
		SPI2_MOSI	I/O	MFP4	SPI2 MOSI (Master Out, Slave In) pin.
		UART1_RXD	I	MFP7	UART1 data receiver input pin.
		UART7_RXD	I	MFP8	UART7 data receiver input pin.
		BPWM0_CH3	I/O	MFP9	BPWM0 channel 3 output/capture input.
		QEI1_B	I	MFP10	Quadrature encoder 1 phase B input
		ECAP0_IC2	I	MFP11	Enhanced capture unit 0 input 2 pin.
		TM3_EXT	I/O	MFP13	Timer3 external capture input/toggle output pin.
		INT4	I	MFP15	External interrupt 4 input pin.
	17	PC.13	I/O	MFP0	General purpose digital I/O pin.
		EADC1_CH3	A	MFP1	EADC1 channel 3 analog input.
		EBI_ADR10	O	MFP2	EBI address bus bit 10.
		SPI2_I2SMCLK	I/O	MFP4	SPI2 I^2S master clock output pin
		CAN1_TXD	O	MFP5	CAN1 bus transmitter output.
		UART2_TXD	O	MFP7	UART2 data transmitter output pin.

64 Pin	128 Pin	Pin Name	Type	MFP	Description
		BPWM0_CH4	I/O	MFP9	BPWM0 channel 4 output/capture input.
		CLKO	O	MFP13	Clock Out
		EADC0_ST	I	MFP14	EADC0 external trigger input.
	18	PD.12	I/O	MFP0	General purpose digital I/O pin.
		EADC1_CH2	A	MFP1	EADC1 channel 2 analog input.
		EBI_nCS0	O	MFP2	EBI chip select 0 output pin.
		CAN1_RXD	I	MFP5	CAN1 bus receiver input.
		UART2_RXD	I	MFP7	UART2 data receiver input pin.
		BPWM0_CH5	I/O	MFP9	BPWM0 channel 5 output/capture input.
		QEI0_INDEX	I	MFP10	Quadrature encoder 0 index input
		CLKO	O	MFP13	Clock Out
		EADC0_ST	I	MFP14	EADC0 external trigger input.
		INT5	I	MFP15	External interrupt 5 input pin.
	19	PD.11	I/O	MFP0	General purpose digital I/O pin.
		EADC1_CH1	A	MFP1	EADC1 channel 1 analog input.
		EBI_nCS1	O	MFP2	EBI chip select 1 output pin.
		UART1_TXD	O	MFP3	UART1 data transmitter output pin.
		CAN0_TXD	O	MFP4	CAN0 bus transmitter output.
		QEI0_A	I	MFP10	Quadrature encoder 0 phase A input
		INT6	I	MFP15	External interrupt 6 input pin.
	20	PD.10	I/O	MFP0	General purpose digital I/O pin.
		EADC1_CH0	A	MFP1	EADC1 channel 0 analog input.
		EBI_nCS2	O	MFP2	EBI chip select 2 output pin.
		UART1_RXD	I	MFP3	UART1 data receiver input pin.
		CAN0_RXD	I	MFP4	CAN0 bus receiver input.
		QEI0_B	I	MFP10	Quadrature encoder 0 phase B input
		INT7	I	MFP15	External interrupt 7 input pin.
	21	PG.2	I/O	MFP0	General purpose digital I/O pin.
		EBI_ADR11	O	MFP2	EBI address bus bit 11.
		SPI2_SS	I/O	MFP3	SPI2 slave select pin.
		I^2C0_SMBAL	O	MFP4	I^2C0 SMBus SMBALTER pin
		I^2C1_SCL	I/O	MFP5	I^2C1 clock pin.
		CCAP_DATA7	I	MFP7	Camera capture data input bus bit 7.
		TM0	I/O	MFP13	Timer0 event counter input/toggle output pin.

64 Pin	128 Pin	Pin Name	Type	MFP	Description
	22	PG.3	I/O	MFP0	General purpose digital I/O pin.
		EBI_ADR12	O	MFP2	EBI address bus bit 12.
		SPI2_CLK	I/O	MFP3	SPI2 serial clock pin.
		I²C0_SMBSUS	O	MFP4	I²C0 SMBus SMBSUS pin (PMBus CONTROL pin)
		I²C1_SDA	I/O	MFP5	I²C1 data input/output pin.
		CCAP_DATA6	I	MFP7	Camera capture data input bus bit 6.
		TM1	I/O	MFP13	Timer1 event counter input/toggle output pin.
	23	PG.4	I/O	MFP0	General purpose digital I/O pin.
		EBI_ADR13	O	MFP2	EBI address bus bit 13.
		SPI2_MISO	I/O	MFP3	SPI2 MISO (Master In, Slave Out) pin.
		CCAP_DATA5	I	MFP7	Camera capture data input bus bit 5.
		TM2	I/O	MFP13	Timer2 event counter input/toggle output pin.
	24	PF.11	I/O	MFP0	General purpose digital I/O pin.
		EBI_ADR14	O	MFP2	EBI address bus bit 14.
		SPI2_MOSI	I/O	MFP3	SPI2 MOSI (Master Out, Slave In) pin.
		UART5_TXD	O	MFP6	UART5 data transmitter output pin.
		CCAP_DATA4	I	MFP7	Camera capture data input bus bit 4.
		TM3	I/O	MFP13	Timer3 event counter input/toggle output pin.
	25	PF.10	I/O	MFP0	General purpose digital I/O pin.
		EBI_ADR15	O	MFP2	EBI address bus bit 15.
		SC0_nCD	I	MFP3	Smart Card 0 card detect pin.
		I²S0_BCLK	O	MFP4	I²S0 bit clock output pin.
		SPI0_I2SMCLK	I/O	MFP5	SPI0 I²S master clock output pin
		UART5_RXD	I	MFP6	UART5 data receiver input pin.
		CCAP_DATA3	I	MFP7	Camera capture data input bus bit 3.
	26	PF.9	I/O	MFP0	General purpose digital I/O pin.
		EBI_ADR16	O	MFP2	EBI address bus bit 16.
		SC0_PWR	O	MFP3	Smart Card 0 power pin.
		I²S0_MCLK	O	MFP4	I²S0 master clock output pin.
		SPI0_SS	I/O	MFP5	SPI0 slave select pin.
		UART5_nRTS	O	MFP6	UART5 request to Send output pin.
		CCAP_DATA2	I	MFP7	Camera capture data input bus bit 2.
		CAN1_TXD	O	MFP8	CAN1 bus transmitter output.
	27	PF.8	I/O	MFP0	General purpose digital I/O pin.

64 Pin	128 Pin	Pin Name	Type	MFP	Description
		EBI_ADR17	O	MFP2	EBI address bus bit 17.
		SC0_RST	O	MFP3	Smart Card 0 reset pin.
		I^2S0_DI	I	MFP4	I^2S0 data input pin.
		SPI0_CLK	I/O	MFP5	SPI0 serial clock pin.
		UART5_nCTS	I	MFP6	UART5 clear to Send input pin.
		CCAP_DATA1	I	MFP7	Camera capture data input bus bit 1.
		CAN1_RXD	I	MFP8	CAN1 bus receiver input.
		TAMPER2	I/O	MFP10	TAMPER detector loop pin 2.
	28	PF.7	I/O	MFP0	General purpose digital I/O pin.
		EBI_ADR18	O	MFP2	EBI address bus bit 18.
		SC0_DAT	I/O	MFP3	Smart Card 0 data pin.
		I^2S0_DO	O	MFP4	I^2S0 data output pin.
		SPI0_MISO	I/O	MFP5	SPI0 MISO (Master In, Slave Out) pin.
		UART4_TXD	O	MFP6	UART4 data transmitter output pin.
		CCAP_DATA0	I	MFP7	Camera capture data input bus bit 0.
		CAN2_TXD	O	MFP8	CAN2 bus transmitter output.
		TAMPER1	I/O	MFP10	TAMPER detector loop pin 1.
12	29	PF.6	I/O	MFP0	General purpose digital I/O pin.
		EBI_ADR19	O	MFP2	EBI address bus bit 19.
		SC0_CLK	O	MFP3	Smart Card 0 clock pin.
		I^2S0_LRCK	O	MFP4	I^2S0 left right channel clock output pin.
		SPI0_MOSI	I/O	MFP5	SPI0 MOSI (Master Out, Slave In) pin.
		UART4_RXD	I	MFP6	UART4 data receiver input pin.
		EBI_nCS0	O	MFP7	EBI chip select 0 output pin.
		CAN2_RXD	I	MFP8	CAN2 bus receiver input.
		TAMPER0	I/O	MFP10	TAMPER detector loop pin 0.
13	30	V_{BAT}	P	MFP0	Power supply by batteries for RTC.
14	31	PF.5	I/O	MFP0	General purpose digital I/O pin.
		UART2_RXD	I	MFP2	UART2 data receiver input pin.
		UART2_nCTS	I	MFP4	UART2 clear to Send input pin.
		EPWM0_CH0	I/O	MFP7	EPWM0 channel 0 output/capture input.
		BPWM0_CH4	I/O	MFP8	BPWM0 channel 4 output/capture input.
		EPWM0_SYNC_OUT	O	MFP9	EPWM0 counter synchronous trigger output pin.
		X32_IN	I	MFP10	External 32.768 kHz crystal input pin.

64 Pin	128 Pin	Pin Name	Type	MFP	Description
		EADC0_ST	I	MFP11	EADC0 external trigger input.
15	32	PF.4	I/O	MFP0	General purpose digital I/O pin.
		UART2_TXD	O	MFP2	UART2 data transmitter output pin.
		UART2_nRTS	O	MFP4	UART2 request to Send output pin.
		EPWM0_CH1	I/O	MFP7	EPWM0 channel 1 output/capture input.
		BPWM0_CH5	I/O	MFP8	BPWM0 channel 5 output/capture input.
		X32_OUT	O	MFP10	External 32.768 kHz crystal output pin.
		EADC1_ST	I	MFP11	EADC1 external trigger input.
	33	PH.4	I/O	MFP0	General purpose digital I/O pin.
		EBI_ADR3	O	MFP2	EBI address bus bit 3.
		SPI1_MISO	I/O	MFP3	SPI1 MISO (Master In, Slave Out) pin.
		UART7_nRTS	O	MFP4	UART7 request to Send output pin.
		UART6_TXD	O	MFP5	UART6 data transmitter output pin.
	34	PH.5	I/O	MFP0	General purpose digital I/O pin.
		EBI_ADR2	O	MFP2	EBI address bus bit 2.
		SPI1_MOSI	I/O	MFP3	SPI1 MOSI (Master Out, Slave In) pin.
		UART7_nCTS	I	MFP4	UART7 clear to Send input pin.
		UART6_RXD	I	MFP5	UART6 data receiver input pin.
	35	PH.6	I/O	MFP0	General purpose digital I/O pin.
		EBI_ADR1	O	MFP2	EBI address bus bit 1.
		SPI1_CLK	I/O	MFP3	SPI1 serial clock pin.
		UART7_TXD	O	MFP4	UART7 data transmitter output pin.
	36	PH.7	I/O	MFP0	General purpose digital I/O pin.
		EBI_ADR0	O	MFP2	EBI address bus bit 0.
		SPI1_SS	I/O	MFP3	SPI1 slave select pin.
		UART7_RXD	I	MFP4	UART7 data receiver input pin.
16	37	PF.3	I/O	MFP0	General purpose digital I/O pin.
		EBI_nCS0	O	MFP2	EBI chip select 0 output pin.
		UART0_TXD	O	MFP3	UART0 data transmitter output pin.
		I^2C0_SCL	I/O	MFP4	I^2C0 clock pin.
		XT1_IN	I	MFP10	External 4~24 MHz (high speed) crystal input pin.
		BPWM1_CH0	I/O	MFP11	BPWM1 channel 0 output/capture input.
17	38	PF.2	I/O	MFP0	General purpose digital I/O pin.
		EBI_nCS1	O	MFP2	EBI chip select 1 output pin.

64 Pin	128 Pin	Pin Name	Type	MFP	Description
		UART0_RXD	I	MFP3	UART0 data receiver input pin.
		I²C0_SDA	I/O	MFP4	I²C0 data input/output pin.
		QSPI0_CLK	I/O	MFP5	Quad SPI0 serial clock pin.
		XT1_OUT	O	MFP10	External 4~24 MHz (high speed) crystal output pin.
		BPWM1_CH1	I/O	MFP11	BPWM1 channel 1 output/capture input.
	39	V_{SS}	P	MFP0	Ground pin for digital circuit.
	40	V_{DD}	P	MFP0	Power supply for I/O ports and LDO source for internal PLL and digital circuit.
	41	PE.8	I/O	MFP0	General purpose digital I/O pin.
		EBI_ADR10	O	MFP2	EBI address bus bit 10.
		I²S0_BCLK	O	MFP4	I²S0 bit clock output pin.
		SPI2_CLK	I/O	MFP5	SPI2 serial clock pin.
		UART2_TXD	O	MFP7	UART2 data transmitter output pin.
		EPWM0_CH0	I/O	MFP10	EPWM0 channel 0 output/capture input.
		EPWM0_BRAKE0	I	MFP11	EPWM0 Brake 0 input pin.
		ECAP0_IC0	I	MFP12	Enhanced capture unit 0 input 0 pin.
		TRACE_DATA3	O	MFP14	ETM Trace Data 3 output pin
	42	PE.9	I/O	MFP0	General purpose digital I/O pin.
		EBI_ADR11	O	MFP2	EBI address bus bit 11.
		I²S0_MCLK	O	MFP4	I²S0 master clock output pin.
		SPI2_MISO	I/O	MFP5	SPI2 MISO (Master In, Slave Out) pin.
		UART2_RXD	I	MFP7	UART2 data receiver input pin.
		EPWM0_CH1	I/O	MFP10	EPWM0 channel 1 output/capture input.
		EPWM0_BRAKE1	I	MFP11	EPWM0 Brake 1 input pin.
		ECAP0_IC1	I	MFP12	Enhanced capture unit 0 input 1 pin.
		TRACE_DATA2	O	MFP14	ETM Trace Data 2 output pin
	43	PE.10	I/O	MFP0	General purpose digital I/O pin.
		EBI_ADR12	O	MFP2	EBI address bus bit 12.
		I²S0_DI	I	MFP4	I²S0 data input pin.
		SPI2_MOSI	I/O	MFP5	SPI2 MOSI (Master Out, Slave In) pin.
		UART3_TXD	O	MFP7	UART3 data transmitter output pin.
		EPWM0_CH2	I/O	MFP10	EPWM0 channel 2 output/capture input.
		EPWM1_BRAKE0	I	MFP11	EPWM1 Brake 0 input pin.
		ECAP0_IC2	I	MFP12	Enhanced capture unit 0 input 2 pin.

64 Pin	128 Pin	Pin Name	Type	MFP	Description
		TRACE_DATA1	O	MFP14	ETM Trace Data 1 output pin
	44	PE.11	I/O	MFP0	General purpose digital I/O pin.
		EBI_ADR13	O	MFP2	EBI address bus bit 13.
		I²S0_DO	O	MFP4	I²S0 data output pin.
		SPI2_SS	I/O	MFP5	SPI2 slave select pin.
		UART3_RXD	I	MFP7	UART3 data receiver input pin.
		UART1_nCTS	I	MFP8	UART1 clear to Send input pin.
		EPWM0_CH3	I/O	MFP10	EPWM0 channel 3 output/capture input.
		EPWM1_BRAKE1	I	MFP11	EPWM1 Brake 1 input pin.
		ECAP1_IC2	I	MFP13	Enhanced capture unit 1 input 2 pin.
		TRACE_DATA0	O	MFP14	ETM Trace Data 0 output pin
	45	PE.12	I/O	MFP0	General purpose digital I/O pin.
		EBI_ADR14	O	MFP2	EBI address bus bit 14.
		I²S0_LRCK	O	MFP4	I²S0 left right channel clock output pin.
		SPI2_I2SMCLK	I/O	MFP5	SPI2 I²S master clock output pin
		UART1_nRTS	O	MFP8	UART1 request to Send output pin.
		EPWM0_CH4	I/O	MFP10	EPWM0 channel 4 output/capture input.
		ECAP1_IC1	I	MFP13	Enhanced capture unit 1 input 1 pin.
		TRACE_CLK	O	MFP14	ETM Trace Clock output pin
	46	PE.13	I/O	MFP0	General purpose digital I/O pin.
		EBI_ADR15	O	MFP2	EBI address bus bit 15.
		I²C0_SCL	I/O	MFP4	I²C0 clock pin.
		UART4_nRTS	O	MFP5	UART4 request to Send output pin.
		UART1_TXD	O	MFP8	UART1 data transmitter output pin.
		EPWM0_CH5	I/O	MFP10	EPWM0 channel 5 output/capture input.
		EPWM1_CH0	I/O	MFP11	EPWM1 channel 0 output/capture input.
		BPWM1_CH5	I/O	MFP12	BPWM1 channel 5 output/capture input.
		ECAP1_IC0	I	MFP13	Enhanced capture unit 1 input 0 pin.
	47	PC.8	I/O	MFP0	General purpose digital I/O pin.
		EBI_ADR16	O	MFP2	EBI address bus bit 16.
		I²C0_SDA	I/O	MFP4	I²C0 data input/output pin.
		UART4_nCTS	I	MFP5	UART4 clear to Send input pin.
		UART1_RXD	I	MFP8	UART1 data receiver input pin.
		EPWM1_CH1	I/O	MFP11	EPWM1 channel 1 output/capture input.

64 Pin	128 Pin	Pin Name	Type	MFP	Description
		BPWM1_CH4	I/O	MFP12	BPWM1 channel 4 output/capture input.
18	48	PC.7	I/O	MFP0	General purpose digital I/O pin.
		EBI_AD9	I/O	MFP2	EBI address/data bus bit 9.
		SPI1_MISO	I/O	MFP4	SPI1 MISO (Master In, Slave Out) pin.
		UART4_TXD	O	MFP5	UART4 data transmitter output pin.
		UART0_nCTS	I	MFP7	UART0 clear to Send input pin.
		I^2C1_SMBAL	O	MFP8	I^2C1 SMBus SMBALTER pin
		UART6_TXD	O	MFP9	UART6 data transmitter output pin.
		EPWM1_CH2	I/O	MFP11	EPWM1 channel 2 output/capture input.
		BPWM1_CH0	I/O	MFP12	BPWM1 channel 0 output/capture input.
		TM0	I/O	MFP14	Timer0 event counter input/toggle output pin.
		INT3	I	MFP15	External interrupt 3 input pin.
19	49	PC.6	I/O	MFP0	General purpose digital I/O pin.
		EBI_AD8	I/O	MFP2	EBI address/data bus bit 8.
		SPI1_MOSI	I/O	MFP4	SPI1 MOSI (Master Out, Slave In) pin.
		UART4_RXD	I	MFP5	UART4 data receiver input pin.
		UART0_nRTS	O	MFP7	UART0 request to Send output pin.
		I^2C1_SMBSUS	O	MFP8	I^2C1 SMBus SMBSUS pin (PMBus CONTROL pin)
		UART6_RXD	I	MFP9	UART6 data receiver input pin.
		EPWM1_CH3	I/O	MFP11	EPWM1 channel 3 output/capture input.
		BPWM1_CH1	I/O	MFP12	BPWM1 channel 1 output/capture input.
		TM1	I/O	MFP14	Timer1 event counter input/toggle output pin.
		INT2	I	MFP15	External interrupt 2 input pin.
20	50	PA.7	I/O	MFP0	General purpose digital I/O pin.
		EBI_AD7	I/O	MFP2	EBI address/data bus bit 7.
		SPI1_CLK	I/O	MFP4	SPI1 serial clock pin.
		UART0_TXD	O	MFP7	UART0 data transmitter output pin.
		I^2C1_SCL	I/O	MFP8	I^2C1 clock pin.
		QSPI1_MISO1	I/O	MFP9	Quad SPI1 MISO1 (Master In, Slave Out) pin.
		EPWM1_CH4	I/O	MFP11	EPWM1 channel 4 output/capture input.
		BPWM1_CH2	I/O	MFP12	BPWM1 channel 2 output/capture input.
		ACMP0_WLAT	I	MFP13	Analog comparator 0 window latch input pin
		TM2	I/O	MFP14	Timer2 event counter input/toggle output pin.
		INT1	I	MFP15	External interrupt 1 input pin.

64 Pin	128 Pin	Pin Name	Type	MFP	Description
21	51	PA.6	I/O	MFP0	General purpose digital I/O pin.
		EBI_AD6	I/O	MFP2	EBI address/data bus bit 6.
		SPI1_SS	I/O	MFP4	SPI1 slave select pin.
		UART0_RXD	I	MFP7	UART0 data receiver input pin.
		I^2C1_SDA	I/O	MFP8	I^2C1 data input/output pin.
		QSPI1_MOSI1	I/O	MFP9	Quad SPI1 MOSI1 (Master Out, Slave In) pin.
		EPWM1_CH5	I/O	MFP11	EPWM1 channel 5 output/capture input.
		BPWM1_CH3	I/O	MFP12	BPWM1 channel 3 output/capture input.
		ACMP1_WLAT	I	MFP13	Analog comparator 1 window latch input pin
		TM3	I/O	MFP14	Timer3 event counter input/toggle output pin.
		INT0	I	MFP15	External interrupt 0 input pin.
22	52	V_{SS}	P	MFP0	Ground pin for digital circuit.
23	53	V_{DD}	P	MFP0	Power supply for I/O ports and LDO source for internal PLL and digital circuit.
24	54	LDO_CAP	A	MFP0	LDO output pin. **Note:** This pin needs to be connected with an external capacitor.
25	55	PA.5	I/O	MFP0	General purpose digital I/O pin.
		QSPI0_MISO1	I/O	MFP3	Quad SPI0 MISO1 (Master In, Slave Out) pin.
		SPI1_I2SMCLK	I/O	MFP4	SPI1 I^2S master clock output pin
		UART0_nCTS	I	MFP7	UART0 clear to Send input pin.
		UART5_TXD	O	MFP8	UART5 data transmitter output pin.
		I^2C0_SCL	I/O	MFP9	I^2C0 clock pin.
		CAN0_TXD	O	MFP10	CAN0 bus transmitter output.
		UART0_TXD	O	MFP11	UART0 data transmitter output pin.
		BPWM0_CH5	I/O	MFP12	BPWM0 channel 5 output/capture input.
		EPWM0_CH0	I/O	MFP13	EPWM0 channel 0 output/capture input.
		QEI0_INDEX	I	MFP14	Quadrature encoder 0 index input
26	56	PA.4	I/O	MFP0	General purpose digital I/O pin.
		QSPI0_MOSI1	I/O	MFP3	Quad SPI0 MOSI1 (Master Out, Slave In) pin.
		SPI0_I2SMCLK	I/O	MFP4	SPI0 I^2S master clock output pin
		SC0_nCD	I	MFP6	Smart Card 0 card detect pin.
		UART0_nRTS	O	MFP7	UART0 request to Send output pin.
		UART5_RXD	I	MFP8	UART5 data receiver input pin.
		I^2C0_SDA	I/O	MFP9	I^2C0 data input/output pin.
		CAN0_RXD	I	MFP10	CAN0 bus receiver input.

64 Pin	128 Pin	Pin Name	Type	MFP	Description
		UART0_RXD	I	MFP11	UART0 data receiver input pin.
		BPWM0_CH4	I/O	MFP12	BPWM0 channel 4 output/capture input.
		EPWM0_CH1	I/O	MFP13	EPWM0 channel 1 output/capture input.
		QEI0_A	I	MFP14	Quadrature encoder 0 phase A input
27	57	PA.3	I/O	MFP0	General purpose digital I/O pin.
		QSPI0_SS	I/O	MFP3	Quad SPI0 slave select pin.
		SPI0_SS	I/O	MFP4	SPI0 slave select pin.
		SC0_PWR	O	MFP6	Smart Card 0 power pin.
		UART4_TXD	O	MFP7	UART4 data transmitter output pin.
		UART1_TXD	O	MFP8	UART1 data transmitter output pin.
		I^2C1_SCL	I/O	MFP9	I^2C1 clock pin.
		I^2C0_SMBAL	O	MFP10	I^2C0 SMBus SMBALTER pin
		BPWM0_CH3	I/O	MFP12	BPWM0 channel 3 output/capture input.
		EPWM0_CH2	I/O	MFP13	EPWM0 channel 2 output/capture input.
		QEI0_B	I	MFP14	Quadrature encoder 0 phase B input
		EPWM1_BRAKE1	I	MFP15	EPWM1 Brake 1 input pin.
28	58	PA.2	I/O	MFP0	General purpose digital I/O pin.
		QSPI0_CLK	I/O	MFP3	Quad SPI0 serial clock pin.
		SPI0_CLK	I/O	MFP4	SPI0 serial clock pin.
		SC0_RST	O	MFP6	Smart Card 0 reset pin.
		UART4_RXD	I	MFP7	UART4 data receiver input pin.
		UART1_RXD	I	MFP8	UART1 data receiver input pin.
		I^2C1_SDA	I/O	MFP9	I^2C1 data input/output pin.
		I^2C0_SMBSUS	O	MFP10	I^2C0 SMBus SMBSUS pin (PMBus CONTROL pin)
		BPWM0_CH2	I/O	MFP12	BPWM0 channel 2 output/capture input.
		EPWM0_CH3	I/O	MFP13	EPWM0 channel 3 output/capture input.
29	59	PA.1	I/O	MFP0	General purpose digital I/O pin.
		QSPI0_MISO0	I/O	MFP3	Quad SPI0 MISO0 (Master In, Slave Out) pin.
		SPI0_MISO	I/O	MFP4	SPI0 MISO (Master In, Slave Out) pin.
		SC0_DAT	I/O	MFP6	Smart Card 0 data pin.
		UART0_TXD	O	MFP7	UART0 data transmitter output pin.
		UART1_nCTS	I	MFP8	UART1 clear to Send input pin.
		I^2C2_SCL	I/O	MFP9	I^2C2 clock pin.
		CCAP_DATA7	I	MFP10	Camera capture data input bus bit 7.

64 Pin	128 Pin	Pin Name	Type	MFP	Description
		BPWM0_CH1	I/O	MFP12	BPWM0 channel 1 output/capture input.
		EPWM0_CH4	I/O	MFP13	EPWM0 channel 4 output/capture input.
30	60	PA.0	I/O	MFP0	General purpose digital I/O pin.
		QSPI0_MOSI0	I/O	MFP3	Quad SPI0 MOSI0 (Master Out, Slave In) pin.
		SPI0_MOSI	I/O	MFP4	SPI0 MOSI (Master Out, Slave In) pin.
		SC0_CLK	O	MFP6	Smart Card 0 clock pin.
		UART0_RXD	I	MFP7	UART0 data receiver input pin.
		UART1_nRTS	O	MFP8	UART1 request to Send output pin.
		I^2C2_SDA	I/O	MFP9	I^2C2 data input/output pin.
		CCAP_DATA6	I	MFP10	Camera capture data input bus bit 6.
		BPWM0_CH0	I/O	MFP12	BPWM0 channel 0 output/capture input.
		EPWM0_CH5	I/O	MFP13	EPWM0 channel 5 output/capture input.
		DAC0_ST	I	MFP15	DAC0 external trigger input.
31	61	V_{DDIO}	P	MFP0	Power supply for PA.0~PA.5.
	62	PE.14	I/O	MFP0	General purpose digital I/O pin.
		EBI_AD8	I/O	MFP2	EBI address/data bus bit 8.
		UART2_TXD	O	MFP3	UART2 data transmitter output pin.
		CAN0_TXD	O	MFP4	CAN0 bus transmitter output.
		UART6_TXD	O	MFP6	UART6 data transmitter output pin.
	63	PE.15	I/O	MFP0	General purpose digital I/O pin.
		EBI_AD9	I/O	MFP2	EBI address/data bus bit 9.
		UART2_RXD	I	MFP3	UART2 data receiver input pin.
		CAN0_RXD	I	MFP4	CAN0 bus receiver input.
		UART6_RXD	I	MFP6	UART6 data receiver input pin.
32	64	nRESET	I	MFP0	External reset input: active LOW, with an internal pull-up. Set this pin low reset to initial state. **Note:** It is recommended to use 10 kΩ pull-up resistor and 10 uF capacitor on nRESET pin.
33	65	PF.0	I/O	MFP0	General purpose digital I/O pin.
		UART1_TXD	O	MFP2	UART1 data transmitter output pin.
		I^2C1_SCL	I/O	MFP3	I^2C1 clock pin.
		UART0_TXD	O	MFP4	UART0 data transmitter output pin.
		BPWM1_CH0	I/O	MFP12	BPWM1 channel 0 output/capture input.
		ICE_DAT	I/O	MFP14	Serial wired debugger data pin. **Note:** It is recommended to use 100 kΩ pull-up resistor on ICE_DAT pin.

64 Pin	128 Pin	Pin Name	Type	MFP	Description
34	66	PF.1	I/O	MFP0	General purpose digital I/O pin.
		UART1_RXD	I	MFP2	UART1 data receiver input pin.
		I²C1_SDA	I/O	MFP3	I²C1 data input/output pin.
		UART0_RXD	I	MFP4	UART0 data receiver input pin.
		BPWM1_CH1	I/O	MFP12	BPWM1 channel 1 output/capture input.
		ICE_CLK	I/O	MFP14	Serial wired debugger clock pin. **Note:** It is recommended to use 100 kΩ pull-up resistor on ICE_CLK pin.
	67	PD.9	I/O	MFP0	General purpose digital I/O pin.
		EBI_AD7	I/O	MFP2	EBI address/data bus bit 7.
		I²C2_SCL	I/O	MFP3	I²C2 clock pin.
		UART2_nCTS	I	MFP4	UART2 clear to Send input pin.
		UART7_TXD	O	MFP5	UART7 data transmitter output pin.
		CAN2_TXD	O	MFP6	CAN2 bus transmitter output.
	68	PD.8	I/O	MFP0	General purpose digital I/O pin.
		EBI_AD6	I/O	MFP2	EBI address/data bus bit 6.
		I²C2_SDA	I/O	MFP3	I²C2 data input/output pin.
		UART2_nRTS	O	MFP4	UART2 request to Send output pin.
		UART7_RXD	I	MFP5	UART7 data receiver input pin.
		CAN2_RXD	I	MFP6	CAN2 bus receiver input.
35	69	PC.5	I/O	MFP0	General purpose digital I/O pin.
		EBI_AD5	I/O	MFP2	EBI address/data bus bit 5.
		QSPI0_MISO1	I/O	MFP4	Quad SPI0 MISO1 (Master In, Slave Out) pin.
		UART2_TXD	O	MFP8	UART2 data transmitter output pin.
		I²C1_SCL	I/O	MFP9	I²C1 clock pin.
		CAN0_TXD	O	MFP10	CAN0 bus transmitter output.
		UART4_TXD	O	MFP11	UART4 data transmitter output pin.
		EPWM1_CH0	I/O	MFP12	EPWM1 channel 0 output/capture input.
		CCAP_DATA5	I	MFP13	Camera capture data input bus bit 5.
		QSPI1_SS	I/O	MFP14	Quad SPI1 slave select pin.
36	70	PC.4	I/O	MFP0	General purpose digital I/O pin.
		EBI_AD4	I/O	MFP2	EBI address/data bus bit 4.
		QSPI0_MOSI1	I/O	MFP4	Quad SPI0 MOSI1 (Master Out, Slave In) pin.
		I²S0_BCLK	O	MFP6	I²S0 bit clock output pin.
		SPI1_I2SMCLK	I/O	MFP7	SPI1 I²S master clock output pin

64 Pin	128 Pin	Pin Name	Type	MFP	Description
		UART2_RXD	I	MFP8	UART2 data receiver input pin.
		I²C1_SDA	I/O	MFP9	I²C1 data input/output pin.
		CAN0_RXD	I	MFP10	CAN0 bus receiver input.
		UART4_RXD	I	MFP11	UART4 data receiver input pin.
		EPWM1_CH1	I/O	MFP12	EPWM1 channel 1 output/capture input.
		CCAP_DATA4	I	MFP13	Camera capture data input bus bit 4.
		QSPI1_CLK	I/O	MFP14	Quad SPI1 serial clock pin.
37	71	PC.3	I/O	MFP0	General purpose digital I/O pin.
		EBI_AD3	I/O	MFP2	EBI address/data bus bit 3.
		QSPI0_SS	I/O	MFP4	Quad SPI0 slave select pin.
		I²S0_MCLK	O	MFP6	I²S0 master clock output pin.
		SPI1_MISO	I/O	MFP7	SPI1 MISO (Master In, Slave Out) pin.
		UART2_nRTS	O	MFP8	UART2 request to Send output pin.
		I²C0_SMBAL	O	MFP9	I²C0 SMBus SMBALTER pin
		CAN1_TXD	O	MFP10	CAN1 bus transmitter output.
		UART3_TXD	O	MFP11	UART3 data transmitter output pin.
		EPWM1_CH2	I/O	MFP12	EPWM1 channel 2 output/capture input.
		CCAP_DATA3	I	MFP13	Camera capture data input bus bit 3.
		QSPI1_MISO0	I/O	MFP14	Quad SPI1 MISO0 (Master In, Slave Out) pin.
38	72	PC.2	I/O	MFP0	General purpose digital I/O pin.
		EBI_AD2	I/O	MFP2	EBI address/data bus bit 2.
		QSPI0_CLK	I/O	MFP4	Quad SPI0 serial clock pin.
		I²S0_DI	I	MFP6	I²S0 data input pin.
		SPI1_MOSI	I/O	MFP7	SPI1 MOSI (Master Out, Slave In) pin.
		UART2_nCTS	I	MFP8	UART2 clear to Send input pin.
		I²C0_SMBSUS	O	MFP9	I²C0 SMBus SMBSUS pin (PMBus CONTROL pin)
		CAN1_RXD	I	MFP10	CAN1 bus receiver input.
		UART3_RXD	I	MFP11	UART3 data receiver input pin.
		EPWM1_CH3	I/O	MFP12	EPWM1 channel 3 output/capture input.
		CCAP_DATA2	I	MFP13	Camera capture data input bus bit 2.
		QSPI1_MOSI0	I/O	MFP14	Quad SPI1 MOSI0 (Master Out, Slave In) pin.
39	73	PC.1	I/O	MFP0	General purpose digital I/O pin.
		EBI_AD1	I/O	MFP2	EBI address/data bus bit 1.
		QSPI0_MISO0	I/O	MFP4	Quad SPI0 MISO0 (Master In, Slave Out) pin.

64 Pin	128 Pin	Pin Name	Type	MFP	Description
		I²S0_DO	O	MFP6	I²S0 data output pin.
		SPI1_CLK	I/O	MFP7	SPI1 serial clock pin.
		UART2_TXD	O	MFP8	UART2 data transmitter output pin.
		I²C0_SCL	I/O	MFP9	I²C0 clock pin.
		CAN2_TXD	O	MFP10	CAN2 bus transmitter output.
		EPWM1_CH4	I/O	MFP12	EPWM1 channel 4 output/capture input.
		CCAP_DATA1	I	MFP13	Camera capture data input bus bit 1.
		ACMP0_O	O	MFP14	Analog comparator 0 output pin.
		EADC0_ST	I	MFP15	EADC0 external trigger input.
40	74	PC.0	I/O	MFP0	General purpose digital I/O pin.
		EBI_AD0	I/O	MFP2	EBI address/data bus bit 0.
		QSPI0_MOSI0	I/O	MFP4	Quad SPI0 MOSI0 (Master Out, Slave In) pin.
		I²S0_LRCK	O	MFP6	I²S0 left right channel clock output pin.
		SPI1_SS	I/O	MFP7	SPI1 slave select pin.
		UART2_RXD	I	MFP8	UART2 data receiver input pin.
		I²C0_SDA	I/O	MFP9	I²C0 data input/output pin.
		CAN2_RXD	I	MFP10	CAN2 bus receiver input.
		EPWM1_CH5	I/O	MFP12	EPWM1 channel 5 output/capture input.
		CCAP_DATA0	I	MFP13	Camera capture data input bus bit 0.
		ACMP1_O	O	MFP14	Analog comparator 1 output pin.
		EADC1_ST	I	MFP15	EADC1 external trigger input.
	75	V_{SS}	P	MFP0	Ground pin for digital circuit.
	76	V_{DD}	P	MFP0	Power supply for I/O ports and LDO source for internal PLL and digital circuit.
	77	PG.9	I/O	MFP0	General purpose digital I/O pin.
		EBI_AD0	I/O	MFP2	EBI address/data bus bit 0.
		QSPI1_MISO1	I/O	MFP5	Quad SPI1 MISO1 (Master In, Slave Out) pin.
		CCAP_PIXCLK	I	MFP7	Camera capture interface pix clock input pin.
		BPWM0_CH5	I/O	MFP12	BPWM0 channel 5 output/capture input.
	78	PG.10	I/O	MFP0	General purpose digital I/O pin.
		EBI_AD1	I/O	MFP2	EBI address/data bus bit 1.
		QSPI1_MOSI1	I/O	MFP5	Quad SPI1 MOSI1 (Master Out, Slave In) pin.
		CCAP_SCLK	O	MFP7	Camera capture interface sensor clock pin.
		BPWM0_CH4	I/O	MFP12	BPWM0 channel 4 output/capture input.

64 Pin	128 Pin	Pin Name	Type	MFP	Description
	79	PG.11	I/O	MFP0	General purpose digital I/O pin.
		EBI_AD2	I/O	MFP2	EBI address/data bus bit 2.
		QSPI1_SS	I/O	MFP5	Quad SPI1 slave select pin.
		UART7_TXD	O	MFP6	UART7 data transmitter output pin.
		CCAP_SFIELD	I	MFP7	Camera capture interface SFIELD input pin.
		BPWM0_CH3	I/O	MFP12	BPWM0 channel 3 output/capture input.
	80	PG.12	I/O	MFP0	General purpose digital I/O pin.
		EBI_AD3	I/O	MFP2	EBI address/data bus bit 3.
		QSPI1_CLK	I/O	MFP5	Quad SPI1 serial clock pin.
		UART7_RXD	I	MFP6	UART7 data receiver input pin.
		CCAP_VSYNC	I	MFP7	Camera capture interface vsync input pin.
		BPWM0_CH2	I/O	MFP12	BPWM0 channel 2 output/capture input.
	81	PG.13	I/O	MFP0	General purpose digital I/O pin.
		EBI_AD4	I/O	MFP2	EBI address/data bus bit 4.
		QSPI1_MISO0	I/O	MFP5	Quad SPI1 MISO0 (Master In, Slave Out) pin.
		UART6_TXD	O	MFP6	UART6 data transmitter output pin.
		CCAP_HSYNC	I	MFP7	Camera capture interface hsync input pin.
		BPWM0_CH1	I/O	MFP12	BPWM0 channel 1 output/capture input.
	82	PG.14	I/O	MFP0	General purpose digital I/O pin.
		EBI_AD5	I/O	MFP2	EBI address/data bus bit 5.
		QSPI1_MOSI0	I/O	MFP5	Quad SPI1 MOSI0 (Master Out, Slave In) pin.
		UART6_RXD	I	MFP6	UART6 data receiver input pin.
		BPWM0_CH0	I/O	MFP12	BPWM0 channel 0 output/capture input.
	83	PG.15	I/O	MFP0	General purpose digital I/O pin.
		CLKO	O	MFP14	Clock Out
		EADC0_ST	I	MFP15	EADC0 external trigger input.
41		PD.3	I/O	MFP0	General purpose digital I/O pin.
		EBI_AD10	I/O	MFP2	EBI address/data bus bit 10.
		SPI0_SS	I/O	MFP4	SPI0 slave select pin.
		UART3_nRTS	O	MFP5	UART3 request to Send output pin.
		UART0_TXD	O	MFP9	UART0 data transmitter output pin.
42		PD.2	I/O	MFP0	General purpose digital I/O pin.
		EBI_AD11	I/O	MFP2	EBI address/data bus bit 11.
		SPI0_CLK	I/O	MFP4	SPI0 serial clock pin.

64 Pin	128 Pin	Pin Name	Type	MFP	Description
		UART3_nCTS	I	MFP5	UART3 clear to Send input pin.
		UART0_RXD	I	MFP9	UART0 data receiver input pin.
43		PD.1	I/O	MFP0	General purpose digital I/O pin.
		EBI_AD12	I/O	MFP2	EBI address/data bus bit 12.
		SPI0_MISO	I/O	MFP4	SPI0 MISO (Master In, Slave Out) pin.
		UART3_TXD	O	MFP5	UART3 data transmitter output pin.
		I2C2_SCL	I/O	MFP6	I2C2 clock pin.
44		PD.0	I/O	MFP0	General purpose digital I/O pin.
		EBI_AD13	I/O	MFP2	EBI address/data bus bit 13.
		SPI0_MOSI	I/O	MFP4	SPI0 MOSI (Master Out, Slave In) pin.
		UART3_RXD	I	MFP5	UART3 data receiver input pin.
		I2C2_SDA	I/O	MFP6	I2C2 data input/output pin.
		TM2	I/O	MFP14	Timer2 event counter input/toggle output pin.
	84	PD.13	I/O	MFP0	General purpose digital I/O pin.
		EBI_AD10	I/O	MFP2	EBI address/data bus bit 10.
		SD0_nCD	I	MFP3	SD/SDIO0 card detect input pin
		SPI0_I2SMCLK	I/O	MFP4	SPI0 I^2S master clock output pin
		SPI1_I2SMCLK	I/O	MFP5	SPI1 I^2S master clock output pin
45	85	PA.12	I/O	MFP0	General purpose digital I/O pin.
		I^2S0_BCLK	O	MFP2	I^2S0 bit clock output pin.
		UART4_TXD	O	MFP3	UART4 data transmitter output pin.
		I^2C1_SCL	I/O	MFP4	I^2C1 clock pin.
		SPI2_SS	I/O	MFP5	SPI2 slave select pin.
		CAN0_TXD	O	MFP6	CAN0 bus transmitter output.
		BPWM1_CH2	I/O	MFP11	BPWM1 channel 2 output/capture input.
		QEI1_INDEX	I	MFP12	Quadrature encoder 1 index input
		USB_VBUS	P	MFP14	Power supply from USB host or HUB.
46	86	PA.13	I/O	MFP0	General purpose digital I/O pin.
		I^2S0_MCLK	O	MFP2	I^2S0 master clock output pin.
		UART4_RXD	I	MFP3	UART4 data receiver input pin.
		I^2C1_SDA	I/O	MFP4	I^2C1 data input/output pin.
		SPI2_CLK	I/O	MFP5	SPI2 serial clock pin.
		CAN0_RXD	I	MFP6	CAN0 bus receiver input.
		BPWM1_CH3	I/O	MFP11	BPWM1 channel 3 output/capture input.

64 Pin	128 Pin	Pin Name	Type	MFP	Description
		QEI1_A	I	MFP12	Quadrature encoder 1 phase A input
		USB_D-	A	MFP14	USB differential signal D-.
47	87	PA.14	I/O	MFP0	General purpose digital I/O pin.
		I²S0_DI	I	MFP2	I²S0 data input pin.
		UART0_TXD	O	MFP3	UART0 data transmitter output pin.
		SPI2_MISO	I/O	MFP5	SPI2 MISO (Master In, Slave Out) pin.
		I²C2_SCL	I/O	MFP6	I²C2 clock pin.
		BPWM1_CH4	I/O	MFP11	BPWM1 channel 4 output/capture input.
		QEI1_B	I	MFP12	Quadrature encoder 1 phase B input
		USB_D+	A	MFP14	USB differential signal D+.
48	88	PA.15	I/O	MFP0	General purpose digital I/O pin.
		I²S0_DO	O	MFP2	I²S0 data output pin.
		UART0_RXD	I	MFP3	UART0 data receiver input pin.
		SPI2_MOSI	I/O	MFP5	SPI2 MOSI (Master Out, Slave In) pin.
		I²C2_SDA	I/O	MFP6	I²C2 data input/output pin.
		BPWM1_CH5	I/O	MFP11	BPWM1 channel 5 output/capture input.
		EPWM0_SYNC_IN	I	MFP12	EPWM0 counter synchronous trigger input pin.
		USB_OTG_ID	I	MFP14	USB_ identification.
	89	NC	-	MFP0	No connect pin, leave floating.
	90	NC	-	MFP0	No connect pin, leave floating.
	91	NC	-	MFP0	No connect pin, leave floating.
	92	NC	-	MFP0	No connect pin, leave floating.
	93	NC	-	MFP0	No connect pin, leave floating.
	94	NC	-	MFP0	No connect pin, leave floating.
	95	NC	-	MFP0	No connect pin, leave floating.
	96	NC	-	MFP0	No connect pin, leave floating.
	97	PE.7	I/O	MFP0	General purpose digital I/O pin.
		SD0_CMD	I/O	MFP3	SD/SDIO0 command/response pin
		UART5_TXD	O	MFP8	UART5 data transmitter output pin.
		CAN1_TXD	O	MFP9	CAN1 bus transmitter output.
		QEI1_INDEX	I	MFP11	Quadrature encoder 1 index input
		EPWM0_CH0	I/O	MFP12	EPWM0 channel 0 output/capture input.
		BPWM0_CH5	I/O	MFP13	BPWM0 channel 5 output/capture input.
	98	PE.6	I/O	MFP0	General purpose digital I/O pin.

64 Pin	128 Pin	Pin Name	Type	MFP	Description
		SD0_CLK	O	MFP3	SD/SDIO0 clock output pin
		SC0_nCD	I	MFP6	Smart Card 0 card detect pin.
		UART5_RXD	I	MFP8	UART5 data receiver input pin.
		CAN1_RXD	I	MFP9	CAN1 bus receiver input.
		QEI1_A	I	MFP11	Quadrature encoder 1 phase A input
		EPWM0_CH1	I/O	MFP12	EPWM0 channel 1 output/capture input.
		BPWM0_CH4	I/O	MFP13	BPWM0 channel 4 output/capture input.
	99	PE.5	I/O	MFP0	General purpose digital I/O pin.
		EBI_nRD	O	MFP2	EBI read enable output pin.
		SD0_DAT3	I/O	MFP3	SD/SDIO0 data line bit 3.
		SC0_PWR	O	MFP6	Smart Card 0 power pin.
		UART6_TXD	O	MFP8	UART6 data transmitter output pin.
		UART7_nRTS	O	MFP9	UART7 request to Send output pin.
		QEI1_B	I	MFP11	Quadrature encoder 1 phase B input
		EPWM0_CH2	I/O	MFP12	EPWM0 channel 2 output/capture input.
		BPWM0_CH3	I/O	MFP13	BPWM0 channel 3 output/capture input.
	100	PE.4	I/O	MFP0	General purpose digital I/O pin.
		EBI_nWR	O	MFP2	EBI write enable output pin.
		SD0_DAT2	I/O	MFP3	SD/SDIO0 data line bit 2.
		SC0_RST	O	MFP6	Smart Card 0 reset pin.
		UART6_RXD	I	MFP8	UART6 data receiver input pin.
		UART7_nCTS	I	MFP9	UART7 clear to Send input pin.
		QEI0_INDEX	I	MFP11	Quadrature encoder 0 index input
		EPWM0_CH3	I/O	MFP12	EPWM0 channel 3 output/capture input.
		BPWM0_CH2	I/O	MFP13	BPWM0 channel 2 output/capture input.
	101	PE.3	I/O	MFP0	General purpose digital I/O pin.
		EBI_MCLK	O	MFP2	EBI external clock output pin.
		SD0_DAT1	I/O	MFP3	SD/SDIO0 data line bit 1.
		SC0_DAT	I/O	MFP6	Smart Card 0 data pin.
		UART6_nRTS	O	MFP8	UART6 request to Send output pin.
		UART7_TXD	O	MFP9	UART7 data transmitter output pin.
		QEI0_A	I	MFP11	Quadrature encoder 0 phase A input
		EPWM0_CH4	I/O	MFP12	EPWM0 channel 4 output/capture input.
		BPWM0_CH1	I/O	MFP13	BPWM0 channel 1 output/capture input.

64 Pin	128 Pin	Pin Name	Type	MFP	Description
	102	PE.2	I/O	MFP0	General purpose digital I/O pin.
		EBI_ALE	O	MFP2	EBI address latch enable output pin.
		SD0_DAT0	I/O	MFP3	SD/SDIO0 data line bit 0.
		SC0_CLK	O	MFP6	Smart Card 0 clock pin.
		UART6_nCTS	I	MFP8	UART6 clear to Send input pin.
		UART7_RXD	I	MFP9	UART7 data receiver input pin.
		QEI0_B	I	MFP11	Quadrature encoder 0 phase B input
		EPWM0_CH5	I/O	MFP12	EPWM0 channel 5 output/capture input.
		BPWM0_CH0	I/O	MFP13	BPWM0 channel 0 output/capture input.
	103	V_{SS}	P	MFP0	Ground pin for digital circuit.
	104	V_{DD}	P	MFP0	Power supply for I/O ports and LDO source for internal PLL and digital circuit.
	105	PE.1	I/O	MFP0	General purpose digital I/O pin.
		EBI_AD10	I/O	MFP2	EBI address/data bus bit 10.
		QSPI0_MISO0	I/O	MFP3	Quad SPI0 MISO0 (Master In, Slave Out) pin.
		I^2S0_BCLK	O	MFP5	I^2S0 bit clock output pin.
		SPI1_MISO	I/O	MFP6	SPI1 MISO (Master In, Slave Out) pin.
		UART3_TXD	O	MFP7	UART3 data transmitter output pin.
		I^2C1_SCL	I/O	MFP8	I^2C1 clock pin.
		UART4_nCTS	I	MFP9	UART4 clear to Send input pin.
	106	PE.0	I/O	MFP0	General purpose digital I/O pin.
		EBI_AD11	I/O	MFP2	EBI address/data bus bit 11.
		QSPI0_MOSI0	I/O	MFP3	Quad SPI0 MOSI0 (Master Out, Slave In) pin.
		I^2S0_MCLK	O	MFP5	I^2S0 master clock output pin.
		SPI1_MOSI	I/O	MFP6	SPI1 MOSI (Master Out, Slave In) pin.
		UART3_RXD	I	MFP7	UART3 data receiver input pin.
		I^2C1_SDA	I/O	MFP8	I^2C1 data input/output pin.
		UART4_nRTS	O	MFP9	UART4 request to Send output pin.
	107	PH.8	I/O	MFP0	General purpose digital I/O pin.
		EBI_AD12	I/O	MFP2	EBI address/data bus bit 12.
		QSPI0_CLK	I/O	MFP3	Quad SPI0 serial clock pin.
		I^2S0_DI	I	MFP5	I^2S0 data input pin.
		SPI1_CLK	I/O	MFP6	SPI1 serial clock pin.
		UART3_nRTS	O	MFP7	UART3 request to Send output pin.

64 Pin	128 Pin	Pin Name	Type	MFP	Description
		I²C1_SMBAL	O	MFP8	I²C1 SMBus SMBALTER pin
		I²C2_SCL	I/O	MFP9	I²C2 clock pin.
		UART1_TXD	O	MFP10	UART1 data transmitter output pin.
	108	PH.9	I/O	MFP0	General purpose digital I/O pin.
		EBI_AD13	I/O	MFP2	EBI address/data bus bit 13.
		QSPI0_SS	I/O	MFP3	Quad SPI0 slave select pin.
		I²S0_DO	O	MFP5	I²S0 data output pin.
		SPI1_SS	I/O	MFP6	SPI1 slave select pin.
		UART3_nCTS	I	MFP7	UART3 clear to Send input pin.
		I²C1_SMBSUS	O	MFP8	I²C1 SMBus SMBSUS pin (PMBus CONTROL pin)
		I²C2_SDA	I/O	MFP9	I²C2 data input/output pin.
		UART1_RXD	I	MFP10	UART1 data receiver input pin.
	109	PH.10	I/O	MFP0	General purpose digital I/O pin.
		EBI_AD14	I/O	MFP2	EBI address/data bus bit 14.
		QSPI0_MISO1	I/O	MFP3	Quad SPI0 MISO1 (Master In, Slave Out) pin.
		I²S0_LRCK	O	MFP5	I²S0 left right channel clock output pin.
		SPI1_I2SMCLK	I/O	MFP6	SPI1 I²S master clock output pin
		UART4_TXD	O	MFP7	UART4 data transmitter output pin.
		UART0_TXD	O	MFP8	UART0 data transmitter output pin.
	110	PH.11	I/O	MFP0	General purpose digital I/O pin.
		EBI_AD15	I/O	MFP2	EBI address/data bus bit 15.
		QSPI0_MOSI1	I/O	MFP3	Quad SPI0 MOSI1 (Master Out, Slave In) pin.
		UART4_RXD	I	MFP7	UART4 data receiver input pin.
		UART0_RXD	I	MFP8	UART0 data receiver input pin.
		EPWM0_CH5	I/O	MFP11	EPWM0 channel 5 output/capture input.
	111	PD.14	I/O	MFP0	General purpose digital I/O pin.
		EBI_nCS0	O	MFP2	EBI chip select 0 output pin.
		SPI0_I2SMCLK	I/O	MFP5	SPI0 I²S master clock output pin
		EPWM0_CH4	I/O	MFP11	EPWM0 channel 4 output/capture input.
49	112	V_{SS}	P	MFP0	Ground pin for digital circuit.
50	113	LDO_CAP	A	MFP0	LDO output pin. **Note:** This pin needs to be connected with an external capacitor.
51	114	V_{DD}	P	MFP0	Power supply for I/O ports and LDO source for internal PLL and digital circuit.
52	115	PC.14	I/O	MFP0	General purpose digital I/O pin.

64 Pin	128 Pin	Pin Name	Type	MFP	Description
		EBI_AD11	I/O	MFP2	EBI address/data bus bit 11.
		SPI0_I2SMCLK	I/O	MFP4	SPI0 I^2S master clock output pin
		QSPI0_CLK	I/O	MFP6	Quad SPI0 serial clock pin.
		EPWM0_SYNC_IN	I	MFP11	EPWM0 counter synchronous trigger input pin.
		ETM_TRACE_CLK	I	MFP12	ETM receiver Trace Clock input pin
		TM1	I/O	MFP13	Timer1 event counter input/toggle output pin.
		USB_VBUS_ST	I	MFP14	USB external V_{BUS} regulator status pin.
53	116	PB.15	I/O	MFP0	General purpose digital I/O pin.
		EADC0_CH15	A	MFP1	EADC0 channel 15 analog input.
		EADC1_CH15	A	MFP1	EADC1 channel 15 analog input.
		EBI_AD12	I/O	MFP2	EBI address/data bus bit 12.
		SPI0_SS	I/O	MFP4	SPI0 slave select pin.
		UART0_nCTS	I	MFP6	UART0 clear to Send input pin.
		UART3_TXD	O	MFP7	UART3 data transmitter output pin.
		I^2C2_SMBAL	O	MFP8	I^2C2 SMBus SMBALTER pin
		EPWM0_BRAKE1	I	MFP10	EPWM0 Brake 1 input pin.
		EPWM1_CH0	I/O	MFP11	EPWM1 channel 0 output/capture input.
		ETM_TRACE_DATA0	I	MFP12	ETM receiver Trace Data 0 input pin
		TM0_EXT	I/O	MFP13	Timer0 external capture input/toggle output pin.
		USB_VBUS_EN	O	MFP14	USB external V_{BUS} regulator enable pin.
54	117	PB.14	I/O	MFP0	General purpose digital I/O pin.
		EADC0_CH14	A	MFP1	EADC0 channel 14 analog input.
		EADC1_CH14	A	MFP1	EADC1 channel 14 analog input.
		EBI_AD13	I/O	MFP2	EBI address/data bus bit 13.
		SPI0_CLK	I/O	MFP4	SPI0 serial clock pin.
		UART0_nRTS	O	MFP6	UART0 request to Send output pin.
		UART3_RXD	I	MFP7	UART3 data receiver input pin.
		I^2C2_SMBSUS	O	MFP8	I^2C2 SMBus SMBSUS pin (PMBus CONTROL pin)
		EPWM1_CH1	I/O	MFP11	EPWM1 channel 1 output/capture input.
		ETM_TRACE_DATA1	I	MFP12	ETM receiver Trace Data 1 input pin
		TM1_EXT	I/O	MFP13	Timer1 external capture input/toggle output pin.
		CLKO	O	MFP14	Clock Out
		USB_VBUS_ST	I	MFP15	USB external V_{BUS} regulator status pin.
55	118	PB.13	I/O	MFP0	General purpose digital I/O pin.

64 Pin	128 Pin	Pin Name	Type	MFP	Description
		EADC0_CH13	A	MFP1	EADC0 channel 13 analog input.
		EADC1_CH13	A	MFP1	EADC1 channel 13 analog input.
		ACMP0_P3	A	MFP1	Analog comparator 0 positive input 3 pin.
		ACMP1_P3	A	MFP1	Analog comparator 1 positive input 3 pin.
		EBI_AD14	I/O	MFP2	EBI address/data bus bit 14.
		SPI0_MISO	I/O	MFP4	SPI0 MISO (Master In, Slave Out) pin.
		UART0_TXD	O	MFP6	UART0 data transmitter output pin.
		UART3_nRTS	O	MFP7	UART3 request to Send output pin.
		I^2C2_SCL	I/O	MFP8	I^2C2 clock pin.
		CCAP_PIXCLK	I	MFP10	Camera capture interface pix clock input pin.
		EPWM1_CH2	I/O	MFP11	EPWM1 channel 2 output/capture input.
		ETM_TRACE_DATA2	I	MFP12	ETM receiver Trace Data 2 input pin
		TM2_EXT	I/O	MFP13	Timer2 external capture input/toggle output pin.
56	119	PB.12	I/O	MFP0	General purpose digital I/O pin.
		EADC0_CH12	A	MFP1	EADC0 channel 12 analog input.
		EADC1_CH12	A	MFP1	EADC1 channel 12 analog input.
		DAC0_OUT	A	MFP1	DAC0 channel analog output.
		ACMP0_P2	A	MFP1	Analog comparator 0 positive input 2 pin.
		ACMP1_P2	A	MFP1	Analog comparator 1 positive input 2 pin.
		EBI_AD15	I/O	MFP2	EBI address/data bus bit 15.
		SPI0_MOSI	I/O	MFP4	SPI0 MOSI (Master Out, Slave In) pin.
		UART0_RXD	I	MFP6	UART0 data receiver input pin.
		UART3_nCTS	I	MFP7	UART3 clear to Send input pin.
		I^2C2_SDA	I/O	MFP8	I^2C2 data input/output pin.
		SD0_nCD	I	MFP9	SD/SDIO0 card detect input pin
		CCAP_SCLK	O	MFP10	Camera capture interface sensor clock pin.
		EPWM1_CH3	I/O	MFP11	EPWM1 channel 3 output/capture input.
		ETM_TRACE_DATA3	I	MFP12	ETM receiver Trace Data 3 input pin
		TM3_EXT	I/O	MFP13	Timer3 external capture input/toggle output pin.
57	120	AV_{DD}	P	MFP0	Power supply for internal analog circuit.
58	121	V_{REF}	A	MFP0	ADC reference voltage input. **Note:** This pin needs to be connected with a 1uF capacitor.
59	122	AV_{SS}	P	MFP0	Ground pin for analog circuit.
60	123	PB.11	I/O	MFP0	General purpose digital I/O pin.

64 Pin	128 Pin	Pin Name	Type	MFP	Description
		EADC0_CH11	A	MFP1	EADC0 channel 11 analog input.
		EBI_ADR16	O	MFP2	EBI address bus bit 16.
		UART0_nCTS	I	MFP5	UART0 clear to Send input pin.
		UART4_TXD	O	MFP6	UART4 data transmitter output pin.
		I²C1_SCL	I/O	MFP7	I²C1 clock pin.
		CAN0_TXD	O	MFP8	CAN0 bus transmitter output.
		SPI0_I2SMCLK	I/O	MFP9	SPI0 I²S master clock output pin
		BPWM1_CH0	I/O	MFP10	BPWM1 channel 0 output/capture input.
		CCAP_SFIELD	I	MFP12	Camera capture interface SFIELD input pin.
61	124	PB.10	I/O	MFP0	General purpose digital I/O pin.
		EADC0_CH10	A	MFP1	EADC0 channel 10 analog input.
		EBI_ADR17	O	MFP2	EBI address bus bit 17.
		UART0_nRTS	O	MFP5	UART0 request to Send output pin.
		UART4_RXD	I	MFP6	UART4 data receiver input pin.
		I²C1_SDA	I/O	MFP7	I²C1 data input/output pin.
		CAN0_RXD	I	MFP8	CAN0 bus receiver input.
		BPWM1_CH1	I/O	MFP10	BPWM1 channel 1 output/capture input.
		CCAP_VSYNC	I	MFP12	Camera capture interface vsync input pin.
62	125	PB.9	I/O	MFP0	General purpose digital I/O pin.
		EADC0_CH9	A	MFP1	EADC0 channel 9 analog input.
		EBI_ADR18	O	MFP2	EBI address bus bit 18.
		UART0_TXD	O	MFP5	UART0 data transmitter output pin.
		UART1_nCTS	I	MFP6	UART1 clear to Send input pin.
		I²C1_SMBAL	O	MFP7	I²C1 SMBus SMBALTER pin
		UART7_TXD	O	MFP8	UART7 data transmitter output pin.
		I²C0_SCL	I/O	MFP9	I²C0 clock pin.
		BPWM1_CH2	I/O	MFP10	BPWM1 channel 2 output/capture input.
		CAN2_TXD	O	MFP12	CAN2 bus transmitter output.
		INT7	I	MFP13	External interrupt 7 input pin.
		CCAP_HSYNC	I	MFP14	Camera capture interface hsync input pin.
63	126	PB.8	I/O	MFP0	General purpose digital I/O pin.
		EADC0_CH8	A	MFP1	EADC0 channel 8 analog input.
		EBI_ADR19	O	MFP2	EBI address bus bit 19.
		UART0_RXD	I	MFP5	UART0 data receiver input pin.

64 Pin	128 Pin	Pin Name	Type	MFP	Description
		UART1_nRTS	O	MFP6	UART1 request to Send output pin.
		I²C1_SMBSUS	O	MFP7	I²C1 SMBus SMBSUS pin (PMBus CONTROL pin)
		UART7_RXD	I	MFP8	UART7 data receiver input pin.
		I²C0_SDA	I/O	MFP9	I²C0 data input/output pin.
		BPWM1_CH3	I/O	MFP10	BPWM1 channel 3 output/capture input.
		CAN2_RXD	I	MFP12	CAN2 bus receiver input.
		INT6	I	MFP13	External interrupt 6 input pin.
64	127	PB.7	I/O	MFP0	General purpose digital I/O pin.
		EADC0_CH7	A	MFP1	EADC0 channel 7 analog input.
		EBI_nWRL	O	MFP2	EBI low byte write enable output pin.
		CAN1_TXD	O	MFP5	CAN1 bus transmitter output.
		UART1_TXD	O	MFP6	UART1 data transmitter output pin.
		EBI_nCS0	O	MFP8	EBI chip select 0 output pin.
		BPWM1_CH4	I/O	MFP10	BPWM1 channel 4 output/capture input.
		EPWM1_BRAKE0	I	MFP11	EPWM1 Brake 0 input pin.
		EPWM1_CH4	I/O	MFP12	EPWM1 channel 4 output/capture input.
		INT5	I	MFP13	External interrupt 5 input pin.
		USB_VBUS_ST	I	MFP14	USB external V_{BUS} regulator status pin.
		ACMP0_O	O	MFP15	Analog comparator 0 output pin.
1	128	PB.6	I/O	MFP0	General purpose digital I/O pin.
		EADC0_CH6	A	MFP1	EADC0 channel 6 analog input.
		EBI_nWRH	O	MFP2	EBI high byte write enable output pin
		CAN1_RXD	I	MFP5	CAN1 bus receiver input.
		UART1_RXD	I	MFP6	UART1 data receiver input pin.
		EBI_nCS1	O	MFP8	EBI chip select 1 output pin.
		BPWM1_CH5	I/O	MFP10	BPWM1 channel 5 output/capture input.
		EPWM1_BRAKE1	I	MFP11	EPWM1 Brake 1 input pin.
		EPWM1_CH5	I/O	MFP12	EPWM1 channel 5 output/capture input.
		INT4	I	MFP13	External interrupt 4 input pin.
		USB_VBUS_EN	O	MFP14	USB external V_{BUS} regulator enable pin.
		ACMP1_O	O	MFP15	Analog comparator 1 output pin.

4.4 M487KMCAN Pin Description

MFP* = Multi-function pin. (Refer to section SYS_GPx_MFPL and SYS_GPx_MFPH)

PA.0 MFP0 means SYS_GPA_MFPL[3:0] = 0x0.

PA.9 MFP5 means SYS_GPA_MFPH[7:4] = 0x5.

Note: PA.15 MFP can only be as USB_OTG_ID when enable full-Speed USB.

128 Pin	Pin Name	Type	MFP	Description
1	PB.5	I/O	MFP0	General purpose digital I/O pin.
	EADC0_CH5	A	MFP1	EADC0 channel 5 analog input.
	ACMP1_N	A	MFP1	Analog comparator 1 negative input pin.
	EBI_ADR0	O	MFP2	EBI address bus bit 0.
	SD0_DAT3	I/O	MFP3	SD/SDIO0 data line bit 3.
	EMAC_RMII_REFCLK	I	MFP4	EMAC RMII reference clock input pin.
	SPI1_MISO	I/O	MFP5	SPI1 MISO (Master In, Slave Out) pin.
	I^2C0_SCL	I/O	MFP6	I^2C0 clock pin.
	UART5_TXD	O	MFP7	UART5 data transmitter output pin.
	USCI1_CTL0	I/O	MFP8	USCI1 control 0 pin.
	SC0_CLK	O	MFP9	Smart Card 0 clock pin.
	I^2S0_BCLK	O	MFP10	I^2S0 bit clock output pin.
	EPWM0_CH0	I/O	MFP11	EPWM0 channel 0 output/capture input.
	TM0	I/O	MFP14	Timer0 event counter input/toggle output pin.
	INT0	I	MFP15	External interrupt 0 input pin.
2	PB.4	I/O	MFP0	General purpose digital I/O pin.
	EADC0_CH4	A	MFP1	EADC0 channel 4 analog input.
	ACMP1_P1	A	MFP1	Analog comparator 1 positive input 1 pin.
	EBI_ADR1	O	MFP2	EBI address bus bit 1.
	SD0_DAT2	I/O	MFP3	SD/SDIO0 data line bit 2.
	EMAC_RMII_RXD0	I	MFP4	EMAC RMII Receive Data bus bit 0.
	SPI1_MOSI	I/O	MFP5	SPI1 MOSI (Master Out, Slave In) pin.
	I^2C0_SDA	I/O	MFP6	I^2C0 data input/output pin.
	UART5_RXD	I	MFP7	UART5 data receiver input pin.
	USCI1_CTL1	I/O	MFP8	USCI1 control 1 pin.
	SC0_DAT	I/O	MFP9	Smart Card 0 data pin.
	I^2S0_MCLK	O	MFP10	I^2S0 master clock output pin.
	EPWM0_CH1	I/O	MFP11	EPWM0 channel 1 output/capture input.

128 Pin	Pin Name	Type	MFP	Description
	TM1	I/O	MFP14	Timer1 event counter input/toggle output pin.
	INT1	I	MFP15	External interrupt 1 input pin.
3	PB.3	I/O	MFP0	General purpose digital I/O pin.
	EADC0_CH3	A	MFP1	EADC0 channel 3 analog input.
	ACMP0_N	A	MFP1	Analog comparator 0 negative input pin.
	EBI_ADR2	O	MFP2	EBI address bus bit 2.
	SD0_DAT1	I/O	MFP3	SD/SDIO0 data line bit 1.
	EMAC_RMII_RXD1	I	MFP4	EMAC RMII Receive Data bus bit 1.
	SPI1_CLK	I/O	MFP5	SPI1 serial clock pin.
	UART1_TXD	O	MFP6	UART1 data transmitter output pin.
	UART5_nRTS	O	MFP7	UART5 request to Send output pin.
	USCI1_DAT1	I/O	MFP8	USCI1 data 1 pin.
	SC0_RST	O	MFP9	Smart Card 0 reset pin.
	I^2S0_DI	I	MFP10	I^2S0 data input pin.
	EPWM0_CH2	I/O	MFP11	EPWM0 channel 2 output/capture input.
	TM2	I/O	MFP14	Timer2 event counter input/toggle output pin.
	INT2	I	MFP15	External interrupt 2 input pin.
4	PB.2	I/O	MFP0	General purpose digital I/O pin.
	EADC0_CH2	A	MFP1	EADC0 channel 2 analog input.
	ACMP0_P1	A	MFP1	Analog comparator 0 positive input 1 pin.
	OPA0_O	A	MFP1	Operational amplifier 0 output pin.
	EBI_ADR3	O	MFP2	EBI address bus bit 3.
	SD0_DAT0	I/O	MFP3	SD/SDIO0 data line bit 0.
	EMAC_RMII_CRSDV	I	MFP4	EMAC RMII Carrier Sense/Receive Data input pin.
	SPI1_SS	I/O	MFP5	SPI1 slave select pin.
	UART1_RXD	I	MFP6	UART1 data receiver input pin.
	UART5_nCTS	I	MFP7	UART5 clear to Send input pin.
	USCI1_DAT0	I/O	MFP8	USCI1 data 0 pin.
	SC0_PWR	O	MFP9	Smart Card 0 power pin.
	I^2S0_DO	O	MFP10	I^2S0 data output pin.
	EPWM0_CH3	I/O	MFP11	EPWM0 channel 3 output/capture input.
	TM3	I/O	MFP14	Timer3 event counter input/toggle output pin.
	INT3	I	MFP15	External interrupt 3 input pin.
5	PC.12	I/O	MFP0	General purpose digital I/O pin.

128 Pin	Pin Name	Type	MFP	Description
	EBI_ADR4	O	MFP2	EBI address bus bit 4.
	UART0_TXD	O	MFP3	UART0 data transmitter output pin.
	I²C0_SCL	I/O	MFP4	I²C0 clock pin.
	SPI3_MISO	I/O	MFP6	SPI3 MISO (Master In, Slave Out) pin.
	SC0_nCD	I	MFP9	Smart Card 0 card detect pin.
	ECAP1_IC2	I	MFP11	Enhanced capture unit 1 input 2 pin.
	EPWM1_CH0	I/O	MFP12	EPWM1 channel 0 output/capture input.
	ACMP0_O	O	MFP14	Analog comparator 0 output pin.
6	PC.11	I/O	MFP0	General purpose digital I/O pin.
	EBI_ADR5	O	MFP2	EBI address bus bit 5.
	UART0_RXD	I	MFP3	UART0 data receiver input pin.
	I²C0_SDA	I/O	MFP4	I²C0 data input/output pin.
	SPI3_MOSI	I/O	MFP6	SPI3 MOSI (Master Out, Slave In) pin.
	ECAP1_IC1	I	MFP11	Enhanced capture unit 1 input 1 pin.
	EPWM1_CH1	I/O	MFP12	EPWM1 channel 1 output/capture input.
	ACMP1_O	O	MFP14	Analog comparator 1 output pin.
7	PC.10	I/O	MFP0	General purpose digital I/O pin.
	EBI_ADR6	O	MFP2	EBI address bus bit 6.
	SPI3_CLK	I/O	MFP6	SPI3 serial clock pin.
	UART3_TXD	O	MFP7	UART3 data transmitter output pin.
	CAN1_TXD	O	MFP9	CAN1 bus transmitter output.
	ECAP1_IC0	I	MFP11	Enhanced capture unit 1 input 0 pin.
	EPWM1_CH2	I/O	MFP12	EPWM1 channel 2 output/capture input.
8	PC.9	I/O	MFP0	General purpose digital I/O pin.
	EBI_ADR7	O	MFP2	EBI address bus bit 7.
	SPI3_SS	I/O	MFP6	SPI3 slave select pin.
	UART3_RXD	I	MFP7	UART3 data receiver input pin.
	CAN1_RXD	I	MFP9	CAN1 bus receiver input.
	EPWM1_CH3	I/O	MFP12	EPWM1 channel 3 output/capture input.
9	PB.1	I/O	MFP0	General purpose digital I/O pin.
	EADC0_CH1	A	MFP1	EADC0 channel 1 analog input.
	OPA0_N	A	MFP1	Operational amplifier 0 negative input pin.
	EBI_ADR8	O	MFP2	EBI address bus bit 8.
	SD0_CLK	O	MFP3	SD/SDIO0 clock output pin

128 Pin	Pin Name	Type	MFP	Description
	EMAC_RMII_RXERR	I	MFP4	EMAC RMII Receive Data Error input pin.
	SPI1_I2SMCLK	I/O	MFP5	SPI1 I^2S master clock output pin
	SPI3_I2SMCLK	I/O	MFP6	SPI3 I^2S master clock output pin
	UART2_TXD	O	MFP7	UART2 data transmitter output pin.
	USCI1_CLK	I/O	MFP8	USCI1 clock pin.
	I^2C1_SCL	I/O	MFP9	I^2C1 clock pin.
	I^2S0_LRCK	O	MFP10	I^2S0 left right channel clock output pin.
	EPWM0_CH4	I/O	MFP11	EPWM0 channel 4 output/capture input.
	EPWM1_CH4	I/O	MFP12	EPWM1 channel 4 output/capture input.
	EPWM0_BRAKE0	I	MFP13	EPWM0 Brake 0 input pin.
10	PB.0	I/O	MFP0	General purpose digital I/O pin.
	EADC0_CH0	A	MFP1	EADC0 channel 0 analog input.
	OPA0_P	A	MFP1	Operational amplifier 0 positive input pin.
	EBI_ADR9	O	MFP2	EBI address bus bit 9.
	SD0_CMD	I/O	MFP3	SD/SDIO0 command/response pin
	UART2_RXD	I	MFP7	UART2 data receiver input pin.
	SPI0_I2SMCLK	I/O	MFP8	SPI0 I^2S master clock output pin
	I^2C1_SDA	I/O	MFP9	I^2C1 data input/output pin.
	EPWM0_CH5	I/O	MFP11	EPWM0 channel 5 output/capture input.
	EPWM1_CH5	I/O	MFP12	EPWM1 channel 5 output/capture input.
	EPWM0_BRAKE1	I	MFP13	EPWM0 Brake 1 input pin.
11	V_{SS}	P	MFP0	Ground pin for digital circuit.
12	V_{DD}	P	MFP0	Power supply for I/O ports and LDO source for internal PLL and digital circuit.
13	PA.11	I/O	MFP0	General purpose digital I/O pin.
	ACMP0_P0	A	MFP1	Analog comparator 0 positive input 0 pin.
	EBI_nRD	O	MFP2	EBI read enable output pin.
	SC2_PWR	O	MFP3	Smart Card 2 power pin.
	SPI2_SS	I/O	MFP4	SPI2 slave select pin.
	SD1_DAT3	I/O	MFP5	SD/SDIO1 data line bit 3.
	USCI0_CLK	I/O	MFP6	USCI0 clock pin.
	I^2C2_SCL	I/O	MFP7	I^2C2 clock pin.
	BPWM0_CH0	I/O	MFP9	BPWM0 channel 0 output/capture input.
	EPWM0_SYNC_OUT	O	MFP10	EPWM0 counter synchronous trigger output pin.

128 Pin	Pin Name	Type	MFP	Description
	TM0_EXT	I/O	MFP13	Timer0 event counter input/toggle output pin.
	DAC1_ST	I	MFP14	DAC1 external trigger input.
14	PA.10	I/O	MFP0	General purpose digital I/O pin.
	ACMP1_P0	A	MFP1	Analog comparator 1 positive input 0 pin.
	OPA1_O	A	MFP1	Operational amplifier 1 output pin.
	EBI_nWR	O	MFP2	EBI write enable output pin.
	SC2_RST	O	MFP3	Smart Card 2 reset pin.
	SPI2_CLK	I/O	MFP4	SPI2 serial clock pin.
	SD1_DAT2	I/O	MFP5	SD/SDIO1 data line bit 2.
	USCI0_DAT0	I/O	MFP6	USCI0 data 0 pin.
	I^2C2_SDA	I/O	MFP7	I^2C2 data input/output pin.
	BPWM0_CH1	I/O	MFP9	BPWM0 channel 1 output/capture input.
	QEI1_INDEX	I	MFP10	Quadrature encoder 1 index input
	ECAP0_IC0	I	MFP11	Enhanced capture unit 0 input 0 pin.
	TM1_EXT	I/O	MFP13	Timer1 event counter input/toggle output pin.
	DAC0_ST	I	MFP14	DAC0 external trigger input.
15	PA.9	I/O	MFP0	General purpose digital I/O pin.
	OPA1_N	A	MFP1	Operational amplifier 1 negative input pin.
	EBI_MCLK	O	MFP2	EBI external clock output pin.
	SC2_DAT	I/O	MFP3	Smart Card 2 data pin.
	SPI2_MISO	I/O	MFP4	SPI2 MISO (Master In, Slave Out) pin.
	SD1_DAT1	I/O	MFP5	SD/SDIO1 data line bit 1.
	USCI0_DAT1	I/O	MFP6	USCI0 data 1 pin.
	UART1_TXD	O	MFP7	UART1 data transmitter output pin.
	BPWM0_CH2	I/O	MFP9	BPWM0 channel 2 output/capture input.
	QEI1_A	I	MFP10	Quadrature encoder 1 phase A input
	ECAP0_IC1	I	MFP11	Enhanced capture unit 0 input 1 pin.
	TM2_EXT	I/O	MFP13	Timer2 event counter input/toggle output pin.
16	PA.8	I/O	MFP0	General purpose digital I/O pin.
	OPA1_P	A	MFP1	Operational amplifier 1 positive input pin.
	EBI_ALE	O	MFP2	EBI address latch enable output pin.
	SC2_CLK	O	MFP3	Smart Card 2 clock pin.

128 Pin	Pin Name	Type	MFP	Description
	SPI2_MOSI	I/O	MFP4	SPI2 MOSI (Master Out, Slave In) pin.
	SD1_DAT0	I/O	MFP5	SD/SDIO1 data line bit 0.
	USCI0_CTL1	I/O	MFP6	USCI0 control 1 pin.
	UART1_RXD	I	MFP7	UART1 data receiver input pin.
	BPWM0_CH3	I/O	MFP9	BPWM0 channel 3 output/capture input.
	QEI1_B	I	MFP10	Quadrature encoder 1 phase B input
	ECAP0_IC2	I	MFP11	Enhanced capture unit 0 input 2 pin.
	TM3_EXT	I/O	MFP13	Timer3 event counter input/toggle output pin.
	INT4	I	MFP15	External interrupt 4 input pin.
17	PC.13	I/O	MFP0	General purpose digital I/O pin.
	EBI_ADR10	O	MFP2	EBI address bus bit 10.
	SC2_nCD	I	MFP3	Smart Card 2 card detect pin.
	SPI2_I2SMCLK	I/O	MFP4	SPI2 I^2S master clock output pin
	CAN1_TXD	O	MFP5	CAN1 bus transmitter output.
	USCI0_CTL0	I/O	MFP6	USCI0 control 0 pin.
	UART2_TXD	O	MFP7	UART2 data transmitter output pin.
	BPWM0_CH4	I/O	MFP9	BPWM0 channel 4 output/capture input.
	CLKO	O	MFP13	Clock Out
	EADC0_ST	I	MFP14	EADC0 external trigger input.
18	PD.12	I/O	MFP0	General purpose digital I/O pin.
	OPA2_O	A	MFP1	Operational amplifier 2 output pin.
	EBI_nCS0	O	MFP2	EBI chip select 0 output pin.
	CAN1_RXD	I	MFP5	CAN1 bus receiver input.
	UART2_RXD	I	MFP7	UART2 data receiver input pin.
	BPWM0_CH5	I/O	MFP9	BPWM0 channel 5 output/capture input.
	QEI0_INDEX	I	MFP10	Quadrature encoder 0 index input
	CLKO	O	MFP13	Clock Out
	EADC0_ST	I	MFP14	EADC0 external trigger input.
	INT5	I	MFP15	External interrupt 5 input pin.
19	PD.11	I/O	MFP0	General purpose digital I/O pin.
	OPA2_N	A	MFP1	Operational amplifier 2 negative input pin.
	EBI_nCS1	O	MFP2	EBI chip select 1 output pin.
	UART1_TXD	O	MFP3	UART1 data transmitter output pin.
	CAN0_TXD	O	MFP4	CAN0 bus transmitter output.

128 Pin	Pin Name	Type	MFP	Description
	QEI0_A	I	MFP10	Quadrature encoder 0 phase A input
	INT6	I	MFP15	External interrupt 6 input pin.
20	PD.10	I/O	MFP0	General purpose digital I/O pin.
	OPA2_P	A	MFP1	Operational amplifier 2 positive input pin.
	EBI_nCS2	O	MFP2	EBI chip select 2 output pin.
	UART1_RXD	I	MFP3	UART1 data receiver input pin.
	CAN0_RXD	I	MFP4	CAN0 bus receiver input.
	QEI0_B	I	MFP10	Quadrature encoder 0 phase B input
	INT7	I	MFP15	External interrupt 7 input pin.
21	PG.2	I/O	MFP0	General purpose digital I/O pin.
	EBI_ADR11	O	MFP2	EBI address bus bit 11.
	SPI2_SS	I/O	MFP3	SPI2 slave select pin.
	I^2C0_SMBAL	O	MFP4	I^2C0 SMBus SMBALTER pin
	I^2C1_SCL	I/O	MFP5	I^2C1 clock pin.
	TM0	I/O	MFP13	Timer0 event counter input/toggle output pin.
22	PG.3	I/O	MFP0	General purpose digital I/O pin.
	EBI_ADR12	O	MFP2	EBI address bus bit 12.
	SPI2_CLK	I/O	MFP3	SPI2 serial clock pin.
	I^2C0_SMBSUS	O	MFP4	I^2C0 SMBus SMBSUS pin (PMBus CONTROL pin)
	I^2C1_SDA	I/O	MFP5	I^2C1 data input/output pin.
	TM1	I/O	MFP13	Timer1 event counter input/toggle output pin.
23	PG.4	I/O	MFP0	General purpose digital I/O pin.
	EBI_ADR13	O	MFP2	EBI address bus bit 13.
	SPI2_MISO	I/O	MFP3	SPI2 MISO (Master In, Slave Out) pin.
	TM2	I/O	MFP13	Timer2 event counter input/toggle output pin.
24	PF.11	I/O	MFP0	General purpose digital I/O pin.
	EBI_ADR14	O	MFP2	EBI address bus bit 14.
	SPI2_MOSI	I/O	MFP3	SPI2 MOSI (Master Out, Slave In) pin.
	TAMPER5	I/O	MFP10	TAMPER detector loop pin 5.
	TM3	I/O	MFP13	Timer3 event counter input/toggle output pin.
25	PF.10	I/O	MFP0	General purpose digital I/O pin.
	EBI_ADR15	O	MFP2	EBI address bus bit 15.
	SC0_nCD	I	MFP3	Smart Card 0 card detect pin.
	I^2S0_BCLK	O	MFP4	I^2S0 bit clock output pin.

128 Pin	Pin Name	Type	MFP	Description
	SPI0_I2SMCLK	I/O	MFP5	SPI0 I²S master clock output pin
	TAMPER4	I/O	MFP10	TAMPER detector loop pin 4.
26	PF.9	I/O	MFP0	General purpose digital I/O pin.
	EBI_ADR16	O	MFP2	EBI address bus bit 16.
	SC0_PWR	O	MFP3	Smart Card 0 power pin.
	I²S0_MCLK	O	MFP4	I²S0 master clock output pin.
	SPI0_SS	I/O	MFP5	SPI0 slave select pin.
	TAMPER3	I/O	MFP10	TAMPER detector loop pin 3.
27	PF.8	I/O	MFP0	General purpose digital I/O pin.
	EBI_ADR17	O	MFP2	EBI address bus bit 17.
	SC0_RST	O	MFP3	Smart Card 0 reset pin.
	I²S0_DI	I	MFP4	I²S0 data input pin.
	SPI0_CLK	I/O	MFP5	SPI0 serial clock pin.
	TAMPER2	I/O	MFP10	TAMPER detector loop pin 2.
28	PF.7	I/O	MFP0	General purpose digital I/O pin.
	EBI_ADR18	O	MFP2	EBI address bus bit 18.
	SC0_DAT	I/O	MFP3	Smart Card 0 data pin.
	I²S0_DO	O	MFP4	I²S0 data output pin.
	SPI0_MISO	I/O	MFP5	SPI0 MISO (Master In, Slave Out) pin.
	UART4_TXD	O	MFP6	UART4 data transmitter output pin.
	TAMPER1	I/O	MFP10	TAMPER detector loop pin 1.
29	PF.6	I/O	MFP0	General purpose digital I/O pin.
	EBI_ADR19	O	MFP2	EBI address bus bit 19.
	SC0_CLK	O	MFP3	Smart Card 0 clock pin.
	I²S0_LRCK	O	MFP4	I²S0 left right channel clock output pin.
	SPI0_MOSI	I/O	MFP5	SPI0 MOSI (Master Out, Slave In) pin.
	UART4_RXD	I	MFP6	UART4 data receiver input pin.
	EBI_nCS0	O	MFP7	EBI chip select 0 output pin.
	TAMPER0	I/O	MFP10	TAMPER detector loop pin 0.
30	V_{DD}	P	MFP0	Power supply for I/O ports and LDO source for internal PLL and digital circuit.
31	PF.5	I/O	MFP0	General purpose digital I/O pin.
	UART2_RXD	I	MFP2	UART2 data receiver input pin.
	UART2_nCTS	I	MFP4	UART2 clear to Send input pin.

128 Pin	Pin Name	Type	MFP	Description
	BPWM0_CH4	I/O	MFP8	BPWM0 channel 4 output/capture input.
	EPWM0_SYNC_OUT	O	MFP9	EPWM0 counter synchronous trigger output pin.
	X32_IN	I	MFP10	External 32.768 kHz crystal input pin.
	EADC0_ST	I	MFP11	EADC0 external trigger input.
32	PF.4	I/O	MFP0	General purpose digital I/O pin.
	UART2_TXD	O	MFP2	UART2 data transmitter output pin.
	UART2_nRTS	O	MFP4	UART2 request to Send output pin.
	BPWM0_CH5	I/O	MFP8	BPWM0 channel 5 output/capture input.
	X32_OUT	O	MFP10	External 32.768 kHz crystal output pin.
33	PH.4	I/O	MFP0	General purpose digital I/O pin.
	EBI_ADR3	O	MFP2	EBI address bus bit 3.
	SPI1_MISO	I/O	MFP3	SPI1 MISO (Master In, Slave Out) pin.
34	PH.5	I/O	MFP0	General purpose digital I/O pin.
	EBI_ADR2	O	MFP2	EBI address bus bit 2.
	SPI1_MOSI	I/O	MFP3	SPI1 MOSI (Master Out, Slave In) pin.
35	PH.6	I/O	MFP0	General purpose digital I/O pin.
	EBI_ADR1	O	MFP2	EBI address bus bit 1.
	SPI1_CLK	I/O	MFP3	SPI1 serial clock pin.
36	PH.7	I/O	MFP0	General purpose digital I/O pin.
	EBI_ADR0	O	MFP2	EBI address bus bit 0.
	SPI1_SS	I/O	MFP3	SPI1 slave select pin.
37	PF.3	I/O	MFP0	General purpose digital I/O pin.
	EBI_nCS0	O	MFP2	EBI chip select 0 output pin.
	UART0_TXD	O	MFP3	UART0 data transmitter output pin.
	I^2C0_SCL	I/O	MFP4	I^2C0 clock pin.
	XT1_IN	I	MFP10	External 4~24 MHz (high speed) crystal input pin.
	BPWM1_CH0	I/O	MFP11	BPWM1 channel 0 output/capture input.
38	PF.2	I/O	MFP0	General purpose digital I/O pin.
	EBI_nCS1	O	MFP2	EBI chip select 1 output pin.
	UART0_RXD	I	MFP3	UART0 data receiver input pin.
	I^2C0_SDA	I/O	MFP4	I^2C0 data input/output pin.
	QSPI0_CLK	I/O	MFP5	QSPI0 serial clock pin.
	XT1_OUT	O	MFP10	External 4~24 MHz (high speed) crystal output pin.
	BPWM1_CH1	I/O	MFP11	BPWM1 channel 1 output/capture input.

128 Pin	Pin Name	Type	MFP	Description
39	V_{SS}	P	MFP0	Ground pin for digital circuit.
40	V_{DD}	P	MFP0	Power supply for I/O ports and LDO source for internal PLL and digital circuit.
41	PE.8	I/O	MFP0	General purpose digital I/O pin.
	EBI_ADR10	O	MFP2	EBI address bus bit 10.
	EMAC_RMII_MDC	O	MFP3	EMAC RMII PHY Management Clock output pin.
	I^2S0_BCLK	O	MFP4	I^2S0 bit clock output pin.
	SPI2_CLK	I/O	MFP5	SPI2 serial clock pin.
	USCI1_CTL1	I/O	MFP6	USCI1 control 1 pin.
	UART2_TXD	O	MFP7	UART2 data transmitter output pin.
	EPWM0_CH0	I/O	MFP10	EPWM0 channel 0 output/capture input.
	EPWM0_BRAKE0	I	MFP11	EPWM0 Brake 0 input pin.
	ECAP0_IC0	I	MFP12	Enhanced capture unit 0 input 0 pin.
	TRACE_DATA3	O	MFP14	ETM Trace Data 3 output pin
42	PE.9	I/O	MFP0	General purpose digital I/O pin.
	EBI_ADR11	O	MFP2	EBI address bus bit 11.
	EMAC_RMII_MDIO	I/O	MFP3	EMAC RMII PHY Management Data pin.
	I^2S0_MCLK	O	MFP4	I^2S0 master clock output pin.
	SPI2_MISO	I/O	MFP5	SPI2 MISO (Master In, Slave Out) pin.
	USCI1_CTL0	I/O	MFP6	USCI1 control 0 pin.
	UART2_RXD	I	MFP7	UART2 data receiver input pin.
	EPWM0_CH1	I/O	MFP10	EPWM0 channel 1 output/capture input.
	EPWM0_BRAKE1	I	MFP11	EPWM0 Brake 1 input pin.
	ECAP0_IC1	I	MFP12	Enhanced capture unit 0 input 1 pin.
	TRACE_DATA2	O	MFP14	ETM Trace Data 2 output pin
43	PE.10	I/O	MFP0	General purpose digital I/O pin.
	EBI_ADR12	O	MFP2	EBI address bus bit 12.
	EMAC_RMII_TXD0	O	MFP3	EMAC RMII Transmit Data bus bit 0.
	I^2S0_DI	I	MFP4	I^2S0 data input pin.
	SPI2_MOSI	I/O	MFP5	SPI2 MOSI (Master Out, Slave In) pin.
	USCI1_DAT0	I/O	MFP6	USCI1 data 0 pin.
	UART3_TXD	O	MFP7	UART3 data transmitter output pin.
	EPWM0_CH2	I/O	MFP10	EPWM0 channel 2 output/capture input.
	EPWM1_BRAKE0	I	MFP11	EPWM1 Brake 0 input pin.

128 Pin	Pin Name	Type	MFP	Description
	ECAP0_IC2	I	MFP12	Enhanced capture unit 0 input 2 pin.
	TRACE_DATA1	O	MFP14	ETM Trace Data 1 output pin
44	PE.11	I/O	MFP0	General purpose digital I/O pin.
	EBI_ADR13	O	MFP2	EBI address bus bit 13.
	EMAC_RMII_TXD1	O	MFP3	EMAC RMII Transmit Data bus bit 1.
	I^2S0_DO	O	MFP4	I^2S0 data output pin.
	SPI2_SS	I/O	MFP5	SPI2 slave select pin.
	USCI1_DAT1	I/O	MFP6	USCI1 data 1 pin.
	UART3_RXD	I	MFP7	UART3 data receiver input pin.
	UART1_nCTS	I	MFP8	UART1 clear to Send input pin.
	EPWM0_CH3	I/O	MFP10	EPWM0 channel 3 output/capture input.
	EPWM1_BRAKE1	I	MFP11	EPWM1 Brake 1 input pin.
	ECAP1_IC2	I	MFP13	Enhanced capture unit 1 input 2 pin.
	TRACE_DATA0	O	MFP14	ETM Trace Data 0 output pin
45	PE.12	I/O	MFP0	General purpose digital I/O pin.
	EBI_ADR14	O	MFP2	EBI address bus bit 14.
	EMAC_RMII_TXEN	O	MFP3	EMAC RMII Transmit Enable output pin.
	I^2S0_LRCK	O	MFP4	I^2S0 left right channel clock output pin.
	SPI2_I2SMCLK	I/O	MFP5	SPI2 I^2S master clock output pin
	USCI1_CLK	I/O	MFP6	USCI1 clock pin.
	UART1_nRTS	O	MFP8	UART1 request to Send output pin.
	EPWM0_CH4	I/O	MFP10	EPWM0 channel 4 output/capture input.
	ECAP1_IC1	I	MFP13	Enhanced capture unit 1 input 1 pin.
	TRACE_CLK	O	MFP14	ETM Trace Clock output pin
46	PE.13	I/O	MFP0	General purpose digital I/O pin.
	EBI_ADR15	O	MFP2	EBI address bus bit 15.
	EMAC_PPS	O	MFP3	EMAC Pulse Per Second output pin.
	I^2C0_SCL	I/O	MFP4	I^2C0 clock pin.
	UART4_nRTS	O	MFP5	UART4 request to Send output pin.
	UART1_TXD	O	MFP8	UART1 data transmitter output pin.
	EPWM0_CH5	I/O	MFP10	EPWM0 channel 5 output/capture input.
	EPWM1_CH0	I/O	MFP11	EPWM1 channel 0 output/capture input.
	BPWM1_CH5	I/O	MFP12	BPWM1 channel 5 output/capture input.
	ECAP1_IC0	I	MFP13	Enhanced capture unit 1 input 0 pin.

128 Pin	Pin Name	Type	MFP	Description
47	PC.8	I/O	MFP0	General purpose digital I/O pin.
	EBI_ADR16	O	MFP2	EBI address bus bit 16.
	EMAC_RMII_REFCLK	I	MFP3	EMAC RMII reference clock input pin.
	I²C0_SDA	I/O	MFP4	I²C0 data input/output pin.
	UART4_nCTS	I	MFP5	UART4 clear to Send input pin.
	UART1_RXD	I	MFP8	UART1 data receiver input pin.
	EPWM1_CH1	I/O	MFP11	EPWM1 channel 1 output/capture input.
	BPWM1_CH4	I/O	MFP12	BPWM1 channel 4 output/capture input.
48	PC.7	I/O	MFP0	General purpose digital I/O pin.
	EBI_AD9	I/O	MFP2	EBI address/data bus bit 9.
	EMAC_RMII_RXD0	I	MFP3	EMAC RMII Receive Data bus bit 0.
	SPI1_MISO	I/O	MFP4	SPI1 MISO (Master In, Slave Out) pin.
	UART4_TXD	O	MFP5	UART4 data transmitter output pin.
	SC2_PWR	O	MFP6	Smart Card 2 power pin.
	UART0_nCTS	I	MFP7	UART0 clear to Send input pin.
	I²C1_SMBAL	O	MFP8	I²C1 SMBus SMBALTER pin
	EPWM1_CH2	I/O	MFP11	EPWM1 channel 2 output/capture input.
	BPWM1_CH0	I/O	MFP12	BPWM1 channel 0 output/capture input.
	TM0	I/O	MFP14	Timer0 event counter input/toggle output pin.
	INT3	I	MFP15	External interrupt 3 input pin.
49	PC.6	I/O	MFP0	General purpose digital I/O pin.
	EBI_AD8	I/O	MFP2	EBI address/data bus bit 8.
	EMAC_RMII_RXD1	I	MFP3	EMAC RMII Receive Data bus bit 1.
	SPI1_MOSI	I/O	MFP4	SPI1 MOSI (Master Out, Slave In) pin.
	UART4_RXD	I	MFP5	UART4 data receiver input pin.
	SC2_RST	O	MFP6	Smart Card 2 reset pin.
	UART0_nRTS	O	MFP7	UART0 request to Send output pin.
	I²C1_SMBSUS	O	MFP8	I²C1 SMBus SMBSUS pin (PMBus CONTROL pin)
	EPWM1_CH3	I/O	MFP11	EPWM1 channel 3 output/capture input.
	BPWM1_CH1	I/O	MFP12	BPWM1 channel 1 output/capture input.
	TM1	I/O	MFP14	Timer1 event counter input/toggle output pin.
	INT2	I	MFP15	External interrupt 2 input pin.
50	PA.7	I/O	MFP0	General purpose digital I/O pin.
	EBI_AD7	I/O	MFP2	EBI address/data bus bit 7.

128 Pin	Pin Name	Type	MFP	Description
	EMAC_RMII_CRSDV	I	MFP3	EMAC RMII Carrier Sense/Receive Data input pin.
	SPI1_CLK	I/O	MFP4	SPI1 serial clock pin.
	SC2_DAT	I/O	MFP6	Smart Card 2 data pin.
	UART0_TXD	O	MFP7	UART0 data transmitter output pin.
	I^2C1_SCL	I/O	MFP8	I^2C1 clock pin.
	EPWM1_CH4	I/O	MFP11	EPWM1 channel 4 output/capture input.
	BPWM1_CH2	I/O	MFP12	BPWM1 channel 2 output/capture input.
	ACMP0_WLAT	I	MFP13	Analog comparator 0 window latch input pin
	TM2	I/O	MFP14	Timer2 event counter input/toggle output pin.
	INT1	I	MFP15	External interrupt 1 input pin.
51	PA.6	I/O	MFP0	General purpose digital I/O pin.
	EBI_AD6	I/O	MFP2	EBI address/data bus bit 6.
	EMAC_RMII_RXERR	I	MFP3	EMAC RMII Receive Data Error input pin.
	SPI1_SS	I/O	MFP4	SPI1 slave select pin.
	SD1_nCD	I	MFP5	SD/SDIO1 card detect input pin
	SC2_CLK	O	MFP6	Smart Card 2 clock pin.
	UART0_RXD	I	MFP7	UART0 data receiver input pin.
	I^2C1_SDA	I/O	MFP8	I^2C1 data input/output pin.
	EPWM1_CH5	I/O	MFP11	EPWM1 channel 5 output/capture input.
	BPWM1_CH3	I/O	MFP12	BPWM1 channel 3 output/capture input.
	ACMP1_WLAT	I	MFP13	Analog comparator 1 window latch input pin
	TM3	I/O	MFP14	Timer3 event counter input/toggle output pin.
	INT0	I	MFP15	External interrupt 0 input pin.
52	V_{SS}	P	MFP0	Ground pin for digital circuit.
53	V_{DD}	P	MFP0	Power supply for I/O ports and LDO source for internal PLL and digital circuit.
54	LDO_CAP	A	MFP0	LDO output pin. **Note:** This pin needs to be connected with an external capacitor.
55	PA.5	I/O	MFP0	General purpose digital I/O pin.
	SPIM_D2	I/O	MFP2	SPIM data 2 pin for Quad Mode I/O.
	QSPI0_MISO1	I/O	MFP3	QSPI0 MISO1 (Master In, Slave Out) pin.
	SPI1_I2SMCLK	I/O	MFP4	SPI1 I^2S master clock output pin
	SD1_CMD	I/O	MFP5	SD/SDIO1 command/response pin
	SC2_nCD	I	MFP6	Smart Card 2 card detect pin.

128 Pin	Pin Name	Type	MFP	Description
	UART0_nCTS	I	MFP7	UART0 clear to Send input pin.
	UART5_TXD	O	MFP8	UART5 data transmitter output pin.
	I²C0_SCL	I/O	MFP9	I²C0 clock pin.
	CAN0_TXD	O	MFP10	CAN0 bus transmitter output.
	BPWM0_CH5	I/O	MFP12	BPWM0 channel 5 output/capture input.
	EPWM0_CH0	I/O	MFP13	EPWM0 channel 0 output/capture input.
	QEI0_INDEX	I	MFP14	Quadrature encoder 0 index input
56	PA.4	I/O	MFP0	General purpose digital I/O pin.
	SPIM_D3	I/O	MFP2	SPIM data 3 pin for Quad Mode I/O.
	QSPI0_MOSI1	I/O	MFP3	QSPI0 MOSI1 (Master Out, Slave In) pin.
	SPI0_I2SMCLK	I/O	MFP4	SPI0 I²S master clock output pin
	SD1_CLK	O	MFP5	SD/SDIO1 clock output pin
	SC0_nCD	I	MFP6	Smart Card 0 card detect pin.
	UART0_nRTS	O	MFP7	UART0 request to Send output pin.
	UART5_RXD	I	MFP8	UART5 data receiver input pin.
	I²C0_SDA	I/O	MFP9	I²C0 data input/output pin.
	CAN0_RXD	I	MFP10	CAN0 bus receiver input.
	BPWM0_CH4	I/O	MFP12	BPWM0 channel 4 output/capture input.
	EPWM0_CH1	I/O	MFP13	EPWM0 channel 1 output/capture input.
	QEI0_A	I	MFP14	Quadrature encoder 0 phase A input
57	PA.3	I/O	MFP0	General purpose digital I/O pin.
	SPIM_SS	I/O	MFP2	SPIM slave select pin.
	QSPI0_SS	I/O	MFP3	QSPI0 slave select pin.
	SPI0_SS	I/O	MFP4	SPI0 slave select pin.
	SD1_DAT3	I/O	MFP5	SD/SDIO1 data line bit 3.
	SC0_PWR	O	MFP6	Smart Card 0 power pin.
	UART4_TXD	O	MFP7	UART4 data transmitter output pin.
	UART1_TXD	O	MFP8	UART1 data transmitter output pin.
	I²C1_SCL	I/O	MFP9	I²C1 clock pin.
	BPWM0_CH3	I/O	MFP12	BPWM0 channel 3 output/capture input.
	EPWM0_CH2	I/O	MFP13	EPWM0 channel 2 output/capture input.
	QEI0_B	I	MFP14	Quadrature encoder 0 phase B input
58	PA.2	I/O	MFP0	General purpose digital I/O pin.
	SPIM_CLK	I/O	MFP2	SPIM serial clock pin.

128 Pin	Pin Name	Type	MFP	Description
	QSPI0_CLK	I/O	MFP3	QSPI0 serial clock pin.
	SPI0_CLK	I/O	MFP4	SPI0 serial clock pin.
	SD1_DAT2	I/O	MFP5	SD/SDIO1 data line bit 2.
	SC0_RST	O	MFP6	Smart Card 0 reset pin.
	UART4_RXD	I	MFP7	UART4 data receiver input pin.
	UART1_RXD	I	MFP8	UART1 data receiver input pin.
	I^2C1_SDA	I/O	MFP9	I^2C1 data input/output pin.
	BPWM0_CH2	I/O	MFP12	BPWM0 channel 2 output/capture input.
	EPWM0_CH3	I/O	MFP13	EPWM0 channel 3 output/capture input.
59	PA.1	I/O	MFP0	General purpose digital I/O pin.
	SPIM_MISO	I/O	MFP2	SPIM MISO (Master In, Slave Out) pin.
	QSPI0_MISO0	I/O	MFP3	QSPI0 MISO0 (Master In, Slave Out) pin.
	SPI0_MISO	I/O	MFP4	SPI0 MISO (Master In, Slave Out) pin.
	SD1_DAT1	I/O	MFP5	SD/SDIO1 data line bit 1.
	SC0_DAT	I/O	MFP6	Smart Card 0 data pin.
	UART0_TXD	O	MFP7	UART0 data transmitter output pin.
	UART1_nCTS	I	MFP8	UART1 clear to Send input pin.
	I^2C2_SCL	I/O	MFP9	I^2C2 clock pin.
	BPWM0_CH1	I/O	MFP12	BPWM0 channel 1 output/capture input.
	EPWM0_CH4	I/O	MFP13	EPWM0 channel 4 output/capture input.
	DAC1_ST	I	MFP15	DAC1 external trigger input.
60	PA.0	I/O	MFP0	General purpose digital I/O pin.
	SPIM_MOSI	I/O	MFP2	SPIM MOSI (Master Out, Slave In) pin.
	QSPI0_MOSI0	I/O	MFP3	QSPI0 MOSI0 (Master Out, Slave In) pin.
	SPI0_MOSI	I/O	MFP4	SPI0 MOSI (Master Out, Slave In) pin.
	SD1_DAT0	I/O	MFP5	SD/SDIO1 data line bit 0.
	SC0_CLK	O	MFP6	Smart Card 0 clock pin.
	UART0_RXD	I	MFP7	UART0 data receiver input pin.
	UART1_nRTS	O	MFP8	UART1 request to Send output pin.
	I^2C2_SDA	I/O	MFP9	I^2C2 data input/output pin.
	BPWM0_CH0	I/O	MFP12	BPWM0 channel 0 output/capture input.
	EPWM0_CH5	I/O	MFP13	EPWM0 channel 5 output/capture input.
	DAC0_ST	I	MFP15	DAC0 external trigger input.
61	V_{DDIO}	P	MFP0	Power supply for PA.0~PA.5.

128 Pin	Pin Name	Type	MFP	Description
62	PE.14	I/O	MFP0	General purpose digital I/O pin.
	EBI_AD8	I/O	MFP2	EBI address/data bus bit 8.
	UART2_TXD	O	MFP3	UART2 data transmitter output pin.
	CAN0_TXD	O	MFP4	CAN0 bus transmitter output.
	SD1_nCD	I	MFP5	SD/SDIO1 card detect input pin
63	PE.15	I/O	MFP0	General purpose digital I/O pin.
	EBI_AD9	I/O	MFP2	EBI address/data bus bit 9.
	UART2_RXD	I	MFP3	UART2 data receiver input pin.
	CAN0_RXD	I	MFP4	CAN0 bus receiver input.
64	nRESET	I	MFP0	External reset input: active LOW, with an internal pull-up. Set this pin low reset to initial state. **Note:** It is recommended to use 10 kΩ pull-up resistor and 10 uF capacitor on nRESET pin.
65	PF.0	I/O	MFP0	General purpose digital I/O pin.
	UART1_TXD	O	MFP2	UART1 data transmitter output pin.
	I^2C1_SCL	I/O	MFP3	I^2C1 clock pin.
	BPWM1_CH0	I/O	MFP12	BPWM1 channel 0 output/capture input.
	ICE_DAT	O	MFP14	Serial wired debugger data pin. **Note:** It is recommended to use 100 kΩ pull-up resistor on ICE_DAT pin.
66	PF.1	I/O	MFP0	General purpose digital I/O pin.
	UART1_RXD	I	MFP2	UART1 data receiver input pin.
	I^2C1_SDA	I/O	MFP3	I^2C1 data input/output pin.
	BPWM1_CH1	I/O	MFP12	BPWM1 channel 1 output/capture input.
	ICE_CLK	I	MFP14	Serial wired debugger clock pin. **Note:** It is recommended to use 100 kΩ pull-up resistor on ICE_CLK pin.
67	PD.9	I/O	MFP0	General purpose digital I/O pin.
	EBI_AD7	I/O	MFP2	EBI address/data bus bit 7.
	I^2C2_SCL	I/O	MFP3	I^2C2 clock pin.
	UART2_nCTS	I	MFP4	UART2 clear to Send input pin.
68	PD.8	I/O	MFP0	General purpose digital I/O pin.
	EBI_AD6	I/O	MFP2	EBI address/data bus bit 6.
	I^2C2_SDA	I/O	MFP3	I^2C2 data input/output pin.
	UART2_nRTS	O	MFP4	UART2 request to Send output pin.
69	PC.5	I/O	MFP0	General purpose digital I/O pin.
	EBI_AD5	I/O	MFP2	EBI address/data bus bit 5.

128 Pin	Pin Name	Type	MFP	Description
	SPIM_D2	I/O	MFP3	SPIM data 2 pin for Quad Mode I/O.
	QSPI0_MISO1	I/O	MFP4	QSPI0 MISO1 (Master In, Slave Out) pin.
	UART2_TXD	O	MFP8	UART2 data transmitter output pin.
	I²C1_SCL	I/O	MFP9	I²C1 clock pin.
	CAN0_TXD	O	MFP10	CAN0 bus transmitter output.
	UART4_TXD	O	MFP11	UART4 data transmitter output pin.
	EPWM1_CH0	I/O	MFP12	EPWM1 channel 0 output/capture input.
70	PC.4	I/O	MFP0	General purpose digital I/O pin.
	EBI_AD4	I/O	MFP2	EBI address/data bus bit 4.
	SPIM_D3	I/O	MFP3	SPIM data 3 pin for Quad Mode I/O.
	QSPI0_MOSI1	I/O	MFP4	QSPI0 MOSI1 (Master Out, Slave In) pin.
	SC1_nCD	I	MFP5	Smart Card 1 card detect pin.
	I²S0_BCLK	O	MFP6	I²S0 bit clock output pin.
	SPI1_I2SMCLK	I/O	MFP7	SPI1 I²S master clock output pin
	UART2_RXD	I	MFP8	UART2 data receiver input pin.
	I²C1_SDA	I/O	MFP9	I²C1 data input/output pin.
	CAN0_RXD	I	MFP10	CAN0 bus receiver input.
	UART4_RXD	I	MFP11	UART4 data receiver input pin.
	EPWM1_CH1	I/O	MFP12	EPWM1 channel 1 output/capture input.
71	PC.3	I/O	MFP0	General purpose digital I/O pin.
	EBI_AD3	I/O	MFP2	EBI address/data bus bit 3.
	SPIM_SS	I/O	MFP3	SPIM slave select pin.
	QSPI0_SS	I/O	MFP4	QSPI0 slave select pin.
	SC1_PWR	O	MFP5	Smart Card 1 power pin.
	I²S0_MCLK	O	MFP6	I²S0 master clock output pin.
	SPI1_MISO	I/O	MFP7	SPI1 MISO (Master In, Slave Out) pin.
	UART2_nRTS	O	MFP8	UART2 request to Send output pin.
	I²C0_SMBAL	O	MFP9	I²C0 SMBus SMBALTER pin
	CAN1_TXD	O	MFP10	CAN1 bus transmitter output.
	UART3_TXD	O	MFP11	UART3 data transmitter output pin.
	EPWM1_CH2	I/O	MFP12	EPWM1 channel 2 output/capture input.
72	PC.2	I/O	MFP0	General purpose digital I/O pin.
	EBI_AD2	I/O	MFP2	EBI address/data bus bit 2.
	SPIM_CLK	I/O	MFP3	SPIM serial clock pin.

128 Pin	Pin Name	Type	MFP	Description
	QSPI0_CLK	I/O	MFP4	QSPI0 serial clock pin.
	SC1_RST	O	MFP5	Smart Card 1 reset pin.
	I²S0_DI	I	MFP6	I²S0 data input pin.
	SPI1_MOSI	I/O	MFP7	SPI1 MOSI (Master Out, Slave In) pin.
	UART2_nCTS	I	MFP8	UART2 clear to Send input pin.
	I²C0_SMBSUS	O	MFP9	I²C0 SMBus SMBSUS pin (PMBus CONTROL pin)
	CAN1_RXD	I	MFP10	CAN1 bus receiver input.
	UART3_RXD	I	MFP11	UART3 data receiver input pin.
	EPWM1_CH3	I/O	MFP12	EPWM1 channel 3 output/capture input.
73	PC.1	I/O	MFP0	General purpose digital I/O pin.
	EBI_AD1	I/O	MFP2	EBI address/data bus bit 1.
	SPIM_MISO	I/O	MFP3	SPIM MISO (Master In, Slave Out) pin.
	QSPI0_MISO0	I/O	MFP4	QSPI0 MISO0 (Master In, Slave Out) pin.
	SC1_DAT	I/O	MFP5	Smart Card 1 data pin.
	I²S0_DO	O	MFP6	I²S0 data output pin.
	SPI1_CLK	I/O	MFP7	SPI1 serial clock pin.
	UART2_TXD	O	MFP8	UART2 data transmitter output pin.
	I²C0_SCL	I/O	MFP9	I²C0 clock pin.
	EPWM1_CH4	I/O	MFP12	EPWM1 channel 4 output/capture input.
	ACMP0_O	O	MFP14	Analog comparator 0 output pin.
74	PC.0	I/O	MFP0	General purpose digital I/O pin.
	EBI_AD0	I/O	MFP2	EBI address/data bus bit 0.
	SPIM_MOSI	I/O	MFP3	SPIM MOSI (Master Out, Slave In) pin.
	QSPI0_MOSI0	I/O	MFP4	QSPI0 MOSI0 (Master Out, Slave In) pin.
	SC1_CLK	O	MFP5	Smart Card 1 clock pin.
	I²S0_LRCK	O	MFP6	I²S0 left right channel clock output pin.
	SPI1_SS	I/O	MFP7	SPI1 slave select pin.
	UART2_RXD	I	MFP8	UART2 data receiver input pin.
	I²C0_SDA	I/O	MFP9	I²C0 data input/output pin.
	EPWM1_CH5	I/O	MFP12	EPWM1 channel 5 output/capture input.
	ACMP1_O	O	MFP14	Analog comparator 1 output pin.
75	V_{SS}	P	MFP0	Ground pin for digital circuit.
76	V_{DD}	P	MFP0	Power supply for I/O ports and LDO source for internal PLL and digital circuit.

128 Pin	Pin Name	Type	MFP	Description
77	PG.9	I/O	MFP0	General purpose digital I/O pin.
	EBI_AD0	I/O	MFP2	EBI address/data bus bit 0.
	SD1_DAT3	I/O	MFP3	SD/SDIO1 data line bit 3.
	SPIM_D2	I/O	MFP4	SPIM data 2 pin for Quad Mode I/O.
	BPWM0_CH5	I/O	MFP12	BPWM0 channel 5 output/capture input.
78	PG.10	I/O	MFP0	General purpose digital I/O pin.
	EBI_AD1	I/O	MFP2	EBI address/data bus bit 1.
	SD1_DAT2	I/O	MFP3	SD/SDIO1 data line bit 2.
	SPIM_D3	I/O	MFP4	SPIM data 3 pin for Quad Mode I/O.
	BPWM0_CH4	I/O	MFP12	BPWM0 channel 4 output/capture input.
79	NC	-	-	No connection.
80	PG.12	I/O	MFP0	General purpose digital I/O pin.
	EBI_AD3	I/O	MFP2	EBI address/data bus bit 3.
	SD1_DAT0	I/O	MFP3	SD/SDIO1 data line bit 0.
	SPIM_CLK	I/O	MFP4	SPIM serial clock pin.
	BPWM0_CH2	I/O	MFP12	BPWM0 channel 2 output/capture input.
81	NC	-	-	No connection.
82	PG.14	I/O	MFP0	General purpose digital I/O pin.
	EBI_AD5	I/O	MFP2	EBI address/data bus bit 5.
	SD1_CLK	O	MFP3	SD/SDIO1 clock output pin
	SPIM_MOSI	I/O	MFP4	SPIM MOSI (Master Out, Slave In) pin.
	BPWM0_CH0	I/O	MFP12	BPWM0 channel 0 output/capture input.
83	PG.15	I/O	MFP0	General purpose digital I/O pin.
	SD1_nCD	I	MFP3	SD/SDIO1 card detect input pin
	CLKO	O	MFP14	Clock Out
	EADC0_ST	I	MFP15	EADC0 external trigger input.
84	PD.13	I/O	MFP0	General purpose digital I/O pin.
	EBI_AD10	I/O	MFP2	EBI address/data bus bit 10.
	SD0_nCD	I	MFP3	SD/SDIO0 card detect input pin
	SPI0_I2SMCLK	I/O	MFP4	SPI0 I^2S master clock output pin
	SPI1_I2SMCLK	I/O	MFP5	SPI1 I^2S master clock output pin
	SC2_nCD	I	MFP7	Smart Card 2 card detect pin.
85	PA.12	I/O	MFP0	General purpose digital I/O pin.
	I^2S0_BCLK	O	MFP2	I^2S0 bit clock output pin.

128 Pin	Pin Name	Type	MFP	Description
	UART4_TXD	O	MFP3	UART4 data transmitter output pin.
	I²C1_SCL	I/O	MFP4	I²C1 clock pin.
	SPI2_SS	I/O	MFP5	SPI2 slave select pin.
	CAN0_TXD	O	MFP6	CAN0 bus transmitter output.
	SC2_PWR	O	MFP7	Smart Card 2 power pin.
	BPWM1_CH2	I/O	MFP11	BPWM1 channel 2 output/capture input.
	QEI1_INDEX	I	MFP12	Quadrature encoder 1 index input
	USB_VBUS	P	MFP14	Power supply from USB host or HUB.
86	PA.13	I/O	MFP0	General purpose digital I/O pin.
	I²S0_MCLK	O	MFP2	I²S0 master clock output pin.
	UART4_RXD	I	MFP3	UART4 data receiver input pin.
	I²C1_SDA	I/O	MFP4	I²C1 data input/output pin.
	SPI2_CLK	I/O	MFP5	SPI2 serial clock pin.
	CAN0_RXD	I	MFP6	CAN0 bus receiver input.
	SC2_RST	O	MFP7	Smart Card 2 reset pin.
	BPWM1_CH3	I/O	MFP11	BPWM1 channel 3 output/capture input.
	QEI1_A	I	MFP12	Quadrature encoder 1 phase A input
	USB_D-	A	MFP14	USB differential signal D-.
87	PA.14	I/O	MFP0	General purpose digital I/O pin.
	I²S0_DI	I	MFP2	I²S0 data input pin.
	UART0_TXD	O	MFP3	UART0 data transmitter output pin.
	SPI2_MISO	I/O	MFP5	SPI2 MISO (Master In, Slave Out) pin.
	I²C2_SCL	I/O	MFP6	I²C2 clock pin.
	SC2_DAT	I/O	MFP7	Smart Card 2 data pin.
	BPWM1_CH4	I/O	MFP11	BPWM1 channel 4 output/capture input.
	QEI1_B	I	MFP12	Quadrature encoder 1 phase B input
	USB_D+	A	MFP14	USB differential signal D+.
88	PA.15	I/O	MFP0	General purpose digital I/O pin.
	I²S0_DO	O	MFP2	I²S0 data output pin.
	UART0_RXD	I	MFP3	UART0 data receiver input pin.
	SPI2_MOSI	I/O	MFP5	SPI2 MOSI (Master Out, Slave In) pin.
	I²C2_SDA	I/O	MFP6	I²C2 data input/output pin.
	SC2_CLK	O	MFP7	Smart Card 2 clock pin.
	BPWM1_CH5	I/O	MFP11	BPWM1 channel 5 output/capture input.

128 Pin	Pin Name	Type	MFP	Description
	EPWM0_SYNC_IN	I	MFP12	EPWM0 counter synchronous trigger input pin.
	USB_OTG_ID	I	MFP14	USB_ identification.
89	HSUSB_VRES	A	MFP0	HSUSB module reference resister
90	HSUSB_V_{DD33}	P	MFP0	Power supply for HSUSB V_{DD33}
91	HSUSB_VBUS	P	MFP0	HSUSB Power supply from USB host or HUB.
92	HSUSB_D-	A	MFP0	HSUSB differential signal D-.
93	HSUSB_VSS	P	MFP0	Ground pin for HSUSB.
94	HSUSB_D+	A	MFP0	HSUSB differential signal D+.
95	HSUSB_V_{DD12}_CAP	A	MFP0	HSUSB Internal power regulator output 1.2V decoupling pin. Note: This pin needs to be connected with a 1uF capacitor.
96	HSUSB_ID	I	MFP0	HSUSB identification.
97	NC	-	-	No connection.
98	NC	-	-	No connection.
99	PE.5	I/O	MFP0	General purpose digital I/O pin.
	EBI_nRD	O	MFP2	EBI read enable output pin.
	SD0_DAT3	I/O	MFP3	SD/SDIO0 data line bit 3.
	SPIM_SS	I/O	MFP4	SPIM slave select pin.
	SPI3_SS	I/O	MFP5	SPI3 slave select pin.
	SC0_PWR	O	MFP6	Smart Card 0 power pin.
	USCI0_CTL1	I/O	MFP7	USCI0 control 1 pin.
	QEI1_B	I	MFP11	Quadrature encoder 1 phase B input
	EPWM0_CH2	I/O	MFP12	EPWM0 channel 2 output/capture input.
	BPWM0_CH3	I/O	MFP13	BPWM0 channel 3 output/capture input.
100	NC	-	-	No connection.
101	PE.3	I/O	MFP0	General purpose digital I/O pin.
	EBI_MCLK	O	MFP2	EBI external clock output pin.
	SD0_DAT1	I/O	MFP3	SD/SDIO0 data line bit 1.
	SPIM_MISO	I/O	MFP4	SPIM MISO (Master In, Slave Out) pin.
	SPI3_MISO	I/O	MFP5	SPI3 MISO (Master In, Slave Out) pin.
	SC0_DAT	I/O	MFP6	Smart Card 0 data pin.
	USCI0_DAT0	I/O	MFP7	USCI0 data 0 pin.
	QEI0_A	I	MFP11	Quadrature encoder 0 phase A input
	EPWM0_CH4	I/O	MFP12	EPWM0 channel 4 output/capture input.
	BPWM0_CH1	I/O	MFP13	BPWM0 channel 1 output/capture input.

128 Pin	Pin Name	Type	MFP	Description
102	NC	-	-	No connection.
103	V_{SS}	P	MFP0	Ground pin for digital circuit.
104	V_{DD}	P	MFP0	Power supply for I/O ports and LDO source for internal PLL and digital circuit.
105	PE.1	I/O	MFP0	General purpose digital I/O pin.
	EBI_AD10	I/O	MFP2	EBI address/data bus bit 10.
	QSPI0_MISO0	I/O	MFP3	QSPI0 MISO0 (Master In, Slave Out) pin.
	SC2_DAT	I/O	MFP4	Smart Card 2 data pin.
	I^2S0_BCLK	O	MFP5	I^2S0 bit clock output pin.
	SPI1_MISO	I/O	MFP6	SPI1 MISO (Master In, Slave Out) pin.
	UART3_TXD	O	MFP7	UART3 data transmitter output pin.
	I^2C1_SCL	I/O	MFP8	I^2C1 clock pin.
	UART4_nCTS	I	MFP9	UART4 clear to Send input pin.
106	PE.0	I/O	MFP0	General purpose digital I/O pin.
	EBI_AD11	I/O	MFP2	EBI address/data bus bit 11.
	QSPI0_MOSI0	I/O	MFP3	QSPI0 MOSI0 (Master Out, Slave In) pin.
	SC2_CLK	O	MFP4	Smart Card 2 clock pin.
	I^2S0_MCLK	O	MFP5	I^2S0 master clock output pin.
	SPI1_MOSI	I/O	MFP6	SPI1 MOSI (Master Out, Slave In) pin.
	UART3_RXD	I	MFP7	UART3 data receiver input pin.
	I^2C1_SDA	I/O	MFP8	I^2C1 data input/output pin.
	UART4_nRTS	O	MFP9	UART4 request to Send output pin.
107	PH.8	I/O	MFP0	General purpose digital I/O pin.
	EBI_AD12	I/O	MFP2	EBI address/data bus bit 12.
	QSPI0_CLK	I/O	MFP3	QSPI0 serial clock pin.
	SC2_PWR	O	MFP4	Smart Card 2 power pin.
	I^2S0_DI	I	MFP5	I^2S0 data input pin.
	SPI1_CLK	I/O	MFP6	SPI1 serial clock pin.
	UART3_nRTS	O	MFP7	UART3 request to Send output pin.
	I^2C1_SMBAL	O	MFP8	I^2C1 SMBus SMBALTER pin
	I^2C2_SCL	I/O	MFP9	I^2C2 clock pin.
	UART1_TXD	O	MFP10	UART1 data transmitter output pin.
108	PH.9	I/O	MFP0	General purpose digital I/O pin.
	EBI_AD13	I/O	MFP2	EBI address/data bus bit 13.

128 Pin	Pin Name	Type	MFP	Description
	QSPI0_SS	I/O	MFP3	QSPI0 slave select pin.
	SC2_RST	O	MFP4	Smart Card 2 reset pin.
	I²S0_DO	O	MFP5	I²S0 data output pin.
	SPI1_SS	I/O	MFP6	SPI1 slave select pin.
	UART3_nCTS	I	MFP7	UART3 clear to Send input pin.
	I²C1_SMBSUS	O	MFP8	I²C1 SMBus SMBSUS pin (PMBus CONTROL pin)
	I²C2_SDA	I/O	MFP9	I²C2 data input/output pin.
	UART1_RXD	I	MFP10	UART1 data receiver input pin.
109	PH.10	I/O	MFP0	General purpose digital I/O pin.
	EBI_AD14	I/O	MFP2	EBI address/data bus bit 14.
	QSPI0_MISO1	I/O	MFP3	QSPI0 MISO1 (Master In, Slave Out) pin.
	SC2_nCD	I	MFP4	Smart Card 2 card detect pin.
	I²S0_LRCK	O	MFP5	I²S0 left right channel clock output pin.
	SPI1_I2SMCLK	I/O	MFP6	SPI1 I²S master clock output pin
	UART4_TXD	O	MFP7	UART4 data transmitter output pin.
	UART0_TXD	O	MFP8	UART0 data transmitter output pin.
110	PH.11	I/O	MFP0	General purpose digital I/O pin.
	EBI_AD15	I/O	MFP2	EBI address/data bus bit 15.
	QSPI0_MOSI1	I/O	MFP3	QSPI0 MOSI1 (Master Out, Slave In) pin.
	UART4_RXD	I	MFP7	UART4 data receiver input pin.
	UART0_RXD	I	MFP8	UART0 data receiver input pin.
	EPWM0_CH5	I/O	MFP11	EPWM0 channel 5 output/capture input.
111	PD.14	I/O	MFP0	General purpose digital I/O pin.
	EBI_nCS0	O	MFP2	EBI chip select 0 output pin.
	SPI3_I2SMCLK	I/O	MFP3	SPI3 I²S master clock output pin
	SC1_nCD	I	MFP4	Smart Card 1 card detect pin.
	EPWM0_CH4	I/O	MFP11	EPWM0 channel 4 output/capture input.
112	V_{SS}	P	MFP0	Ground pin for digital circuit.
113	LDO_CAP	A	MFP0	LDO output pin. **Note:** This pin needs to be connected with an external capacitor.
114	V_{DD}	P	MFP0	Power supply for I/O ports and LDO source for internal PLL and digital circuit.
115	PC.14	I/O	MFP0	General purpose digital I/O pin.
	EBI_AD11	I/O	MFP2	EBI address/data bus bit 11.

128 Pin	Pin Name	Type	MFP	Description
	SC1_nCD	I	MFP3	Smart Card 1 card detect pin.
	SPI0_I2SMCLK	I/O	MFP4	SPI0 I^2S master clock output pin
	USCI0_CTL0	I/O	MFP5	USCI0 control 0 pin.
	QSPI0_CLK	I/O	MFP6	QSPI0 serial clock pin.
	EPWM0_SYNC_IN	I	MFP11	EPWM0 counter synchronous trigger input pin.
	ETM_TRACE_CLK	I	MFP12	ETM receiver Trace Clock input pin
	TM1	I/O	MFP13	Timer1 event counter input/toggle output pin.
	USB_VBUS_ST	I	MFP14	USB external V_{BUS} regulator status pin.
	HSUSB_VBUS_ST	I	MFP15	HSUSB external V_{BUS} regulator status pin.
116	PB.15	I/O	MFP0	General purpose digital I/O pin.
	EADC0_CH15	A	MFP1	EADC0 channel 15 analog input.
	EBI_AD12	I/O	MFP2	EBI address/data bus bit 12.
	SC1_PWR	O	MFP3	Smart Card 1 power pin.
	SPI0_SS	I/O	MFP4	SPI0 slave select pin.
	USCI0_CTL1	I/O	MFP5	USCI0 control 1 pin.
	UART0_nCTS	I	MFP6	UART0 clear to Send input pin.
	UART3_TXD	O	MFP7	UART3 data transmitter output pin.
	I^2C2_SMBAL	O	MFP8	I^2C2 SMBus SMBALTER pin
	EPWM1_CH0	I/O	MFP11	EPWM1 channel 0 output/capture input.
	ETM_TRACE_DATA0	I	MFP12	ETM receiver Trace Data 0 input pin
	TM0_EXT	I/O	MFP13	Timer0 event counter input/toggle output pin.
	USB_VBUS_EN	O	MFP14	USB external V_{BUS} regulator enable pin.
	HSUSB_VBUS_EN	O	MFP15	HSUSB external V_{BUS} regulator enable pin.
117	PB.14	I/O	MFP0	General purpose digital I/O pin.
	EADC0_CH14	A	MFP1	EADC0 channel 14 analog input.
	EBI_AD13	I/O	MFP2	EBI address/data bus bit 13.
	SC1_RST	O	MFP3	Smart Card 1 reset pin.
	SPI0_CLK	I/O	MFP4	SPI0 serial clock pin.
	USCI0_DAT1	I/O	MFP5	USCI0 data 1 pin.
	UART0_nRTS	O	MFP6	UART0 request to Send output pin.
	UART3_RXD	I	MFP7	UART3 data receiver input pin.
	I^2C2_SMBSUS	O	MFP8	I^2C2 SMBus SMBSUS pin (PMBus CONTROL pin)
	EPWM1_CH1	I/O	MFP11	EPWM1 channel 1 output/capture input.
	ETM_TRACE_DATA1	I	MFP12	ETM receiver Trace Data 1 input pin

128 Pin	Pin Name	Type	MFP	Description
	TM1_EXT	I/O	MFP13	Timer1 event counter input/toggle output pin.
	CLKO	O	MFP14	Clock Out
118	PB.13	I/O	MFP0	General purpose digital I/O pin.
	EADC0_CH13	A	MFP1	EADC0 channel 13 analog input.
	DAC1_OUT	A	MFP1	DAC1 channel analog output.
	ACMP0_P3	A	MFP1	Analog comparator 0 positive input 3 pin.
	ACMP1_P3	A	MFP1	Analog comparator 1 positive input 3 pin.
	EBI_AD14	I/O	MFP2	EBI address/data bus bit 14.
	SC1_DAT	I/O	MFP3	Smart Card 1 data pin.
	SPI0_MISO	I/O	MFP4	SPI0 MISO (Master In, Slave Out) pin.
	USCI0_DAT0	I/O	MFP5	USCI0 data 0 pin.
	UART0_TXD	O	MFP6	UART0 data transmitter output pin.
	UART3_nRTS	O	MFP7	UART3 request to Send output pin.
	I^2C2_SCL	I/O	MFP8	I^2C2 clock pin.
	EPWM1_CH2	I/O	MFP11	EPWM1 channel 2 output/capture input.
	ETM_TRACE_DATA2	I	MFP12	ETM receiver Trace Data 2 input pin
	TM2_EXT	I/O	MFP13	Timer2 event counter input/toggle output pin.
119	PB.12	I/O	MFP0	General purpose digital I/O pin.
	EADC0_CH12	A	MFP1	EADC0 channel 12 analog input.
	DAC0_OUT	A	MFP1	DAC0 channel analog output.
	ACMP0_P2	A	MFP1	Analog comparator 0 positive input 2 pin.
	ACMP1_P2	A	MFP1	Analog comparator 1 positive input 2 pin.
	EBI_AD15	I/O	MFP2	EBI address/data bus bit 15.
	SC1_CLK	O	MFP3	Smart Card 1 clock pin.
	SPI0_MOSI	I/O	MFP4	SPI0 MOSI (Master Out, Slave In) pin.
	USCI0_CLK	I/O	MFP5	USCI0 clock pin.
	UART0_RXD	I	MFP6	UART0 data receiver input pin.
	UART3_nCTS	I	MFP7	UART3 clear to Send input pin.
	I^2C2_SDA	I/O	MFP8	I^2C2 data input/output pin.
	SD0_nCD	I	MFP9	SD/SDIO0 card detect input pin
	EPWM1_CH3	I/O	MFP11	EPWM1 channel 3 output/capture input.
	ETM_TRACE_DATA3	I	MFP12	ETM receiver Trace Data 3 input pin
	TM3_EXT	I/O	MFP13	Timer3 event counter input/toggle output pin.
120	AV_{DD}	P	MFP0	Power supply for internal analog circuit.

128 Pin	Pin Name	Type	MFP	Description
121	V_{REF}	A	MFP0	ADC reference voltage input. Note: This pin needs to be connected with a 1uF capacitor.
122	AV_{SS}	P	MFP0	Ground pin for analog circuit.
123	PB.11	I/O	MFP0	General purpose digital I/O pin.
	EADC0_CH11	A	MFP1	EADC0 channel 11 analog input.
	EBI_ADR16	O	MFP2	EBI address bus bit 16.
	EMAC_RMII_MDC	O	MFP3	EMAC RMII PHY Management Clock output pin.
	UART0_nCTS	I	MFP5	UART0 clear to Send input pin.
	UART4_TXD	O	MFP6	UART4 data transmitter output pin.
	I^2C1_SCL	I/O	MFP7	I^2C1 clock pin.
	CAN0_TXD	O	MFP8	CAN0 bus transmitter output.
	SPI0_I2SMCLK	I/O	MFP9	SPI0 I^2S master clock output pin
	BPWM1_CH0	I/O	MFP10	BPWM1 channel 0 output/capture input.
	SPI3_CLK	I/O	MFP11	SPI3 serial clock pin.
	HSUSB_VBUS_ST	I	MFP14	HSUSB external V_{BUS} regulator status pin.
124	PB.10	I/O	MFP0	General purpose digital I/O pin.
	EADC0_CH10	A	MFP1	EADC0 channel 10 analog input.
	EBI_ADR17	O	MFP2	EBI address bus bit 17.
	EMAC_RMII_MDIO	I/O	MFP3	EMAC RMII PHY Management Data pin.
	USCI1_CTL0	I/O	MFP4	USCI1 control 0 pin.
	UART0_nRTS	O	MFP5	UART0 request to Send output pin.
	UART4_RXD	I	MFP6	UART4 data receiver input pin.
	I^2C1_SDA	I/O	MFP7	I^2C1 data input/output pin.
	CAN0_RXD	I	MFP8	CAN0 bus receiver input.
	BPWM1_CH1	I/O	MFP10	BPWM1 channel 1 output/capture input.
	SPI3_SS	I/O	MFP11	SPI3 slave select pin.
	HSUSB_VBUS_EN	O	MFP14	HSUSB external V_{BUS} regulator enable pin.
125	PB.9	I/O	MFP0	General purpose digital I/O pin.
	EADC0_CH9	A	MFP1	EADC0 channel 9 analog input.
	EBI_ADR18	O	MFP2	EBI address bus bit 18.
	EMAC_RMII_TXD0	O	MFP3	EMAC RMII Transmit Data bus bit 0.
	USCI1_CTL1	I/O	MFP4	USCI1 control 1 pin.
	UART0_TXD	O	MFP5	UART0 data transmitter output pin.
	UART1_nCTS	I	MFP6	UART1 clear to Send input pin.

128 Pin	Pin Name	Type	MFP	Description
	I²C1_SMBAL	O	MFP7	I²C1 SMBus SMBALTER pin
	BPWM1_CH2	I/O	MFP10	BPWM1 channel 2 output/capture input.
	SPI3_MISO	I/O	MFP11	SPI3 MISO (Master In, Slave Out) pin.
	INT7	I	MFP13	External interrupt 7 input pin.
126	PB.8	I/O	MFP0	General purpose digital I/O pin.
	EADC0_CH8	A	MFP1	EADC0 channel 8 analog input.
	EBI_ADR19	O	MFP2	EBI address bus bit 19.
	EMAC_RMII_TXD1	O	MFP3	EMAC RMII Transmit Data bus bit 1.
	USCI1_CLK	I/O	MFP4	USCI1 clock pin.
	UART0_RXD	I	MFP5	UART0 data receiver input pin.
	UART1_nRTS	O	MFP6	UART1 request to Send output pin.
	I²C1_SMBSUS	O	MFP7	I²C1 SMBus SMBSUS pin (PMBus CONTROL pin)
	BPWM1_CH3	I/O	MFP10	BPWM1 channel 3 output/capture input.
	SPI3_MOSI	I/O	MFP11	SPI3 MOSI (Master Out, Slave In) pin.
	INT6	I	MFP13	External interrupt 6 input pin.
127	PB.7	I/O	MFP0	General purpose digital I/O pin.
	EADC0_CH7	A	MFP1	EADC0 channel 7 analog input.
	EBI_nWRL	O	MFP2	EBI low byte write enable output pin.
	EMAC_RMII_TXEN	O	MFP3	EMAC RMII Transmit Enable output pin.
	USCI1_DAT0	I/O	MFP4	USCI1 data 0 pin.
	CAN1_TXD	O	MFP5	CAN1 bus transmitter output.
	UART1_TXD	O	MFP6	UART1 data transmitter output pin.
	SD1_CMD	I/O	MFP7	SD/SDIO1 command/response pin
	EBI_nCS0	O	MFP8	EBI chip select 0 output pin.
	BPWM1_CH4	I/O	MFP10	BPWM1 channel 4 output/capture input.
	EPWM1_BRAKE0	I	MFP11	EPWM1 Brake 0 input pin.
	EPWM1_CH4	I/O	MFP12	EPWM1 channel 4 output/capture input.
	INT5	I	MFP13	External interrupt 5 input pin.
	USB_VBUS_ST	I	MFP14	USB external V_{BUS} regulator status pin.
	ACMP0_O	O	MFP15	Analog comparator 0 output pin.
128	PB.6	I/O	MFP0	General purpose digital I/O pin.
	EADC0_CH6	A	MFP1	EADC0 channel 6 analog input.
	EBI_nWRH	O	MFP2	EBI high byte write enable output pin
	EMAC_PPS	O	MFP3	EMAC Pulse Per Second output pin.

128 Pin	Pin Name	Type	MFP	Description
	USCI1_DAT1	I/O	MFP4	USCI1 data 1 pin.
	CAN1_RXD	I	MFP5	CAN1 bus receiver input.
	UART1_RXD	I	MFP6	UART1 data receiver input pin.
	SD1_CLK	O	MFP7	SD/SDIO1 clock output pin
	EBI_nCS1	O	MFP8	EBI chip select 1 output pin.
	BPWM1_CH5	I/O	MFP10	BPWM1 channel 5 output/capture input.
	EPWM1_BRAKE1	I	MFP11	EPWM1 Brake 1 input pin.
	EPWM1_CH5	I/O	MFP12	EPWM1 channel 5 output/capture input.
	INT4	I	MFP13	External interrupt 4 input pin.
	USB_VBUS_EN	O	MFP14	USB external V_{BUS} regulator enable pin.
	ACMP1_O	O	MFP15	Analog comparator 1 output pin.

5 BLOCK DIAGRAM

5.1 M480 Block Diagram

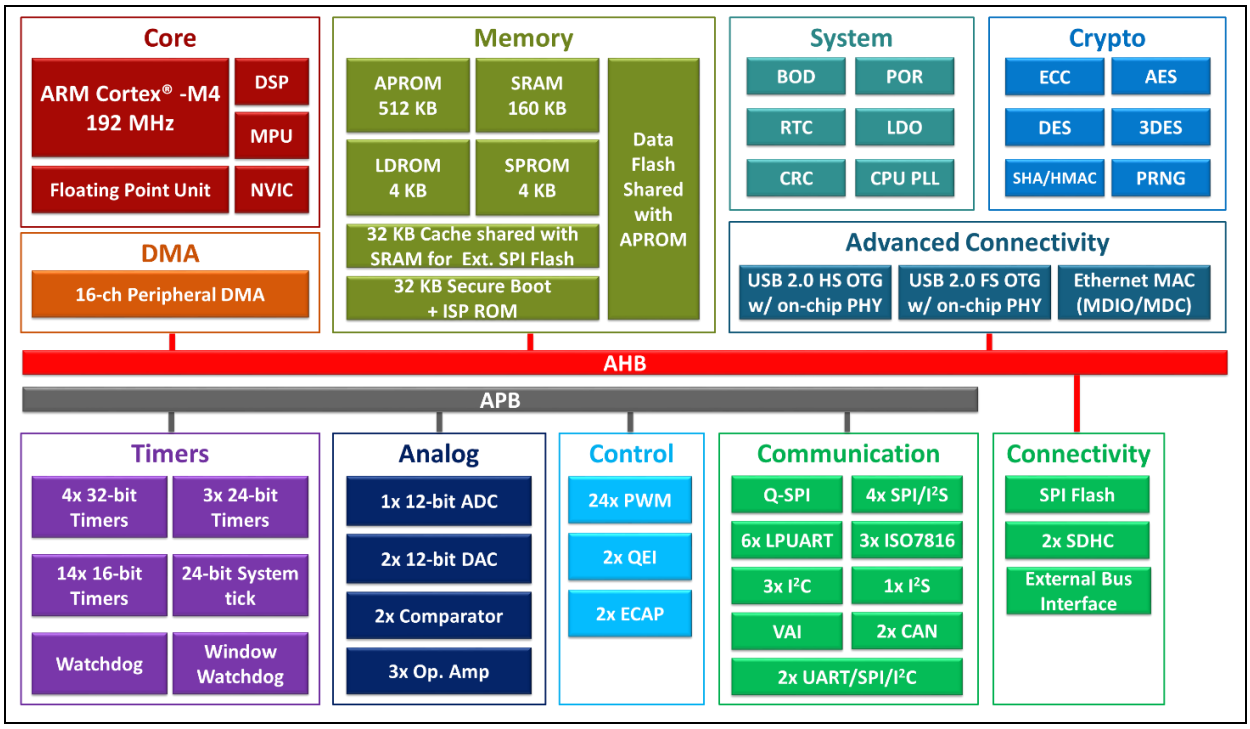

Figure 5.1-1 NuMicro® M480 Block Diagram (M48xID)

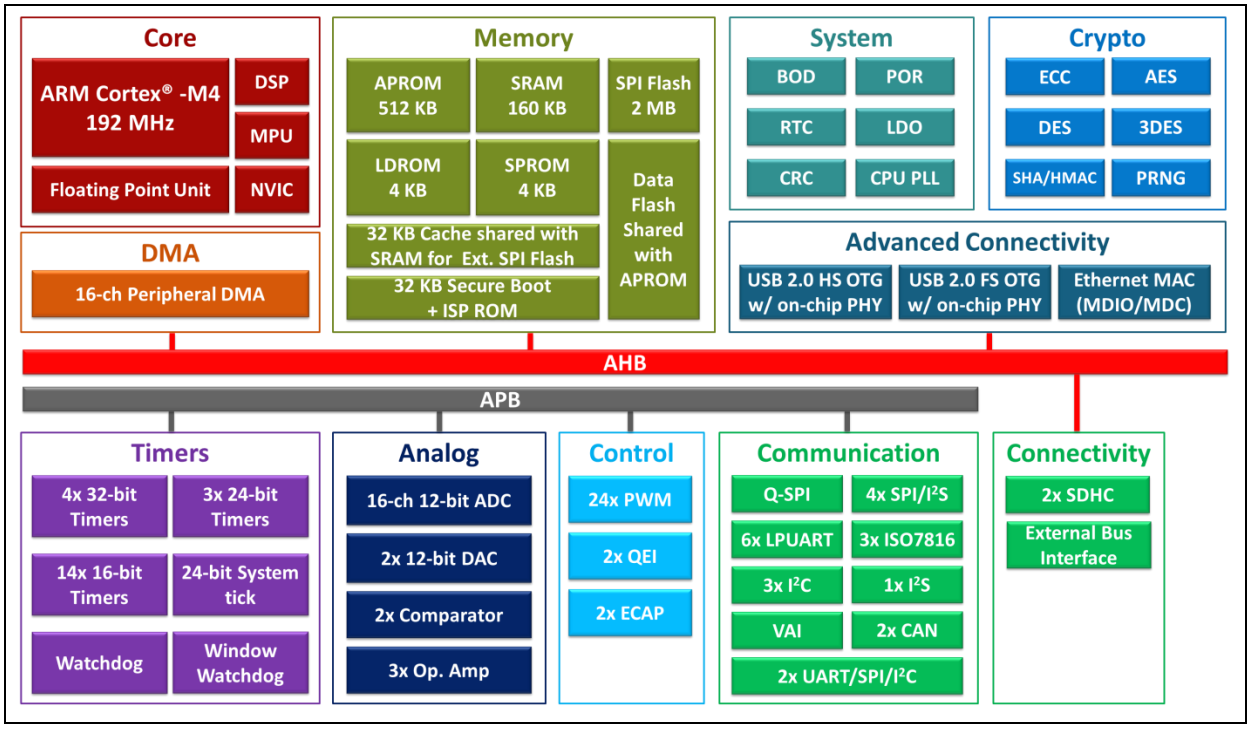

Figure 5.1-2 NuMicro® M480 Block Diagram (M487KMCAN)

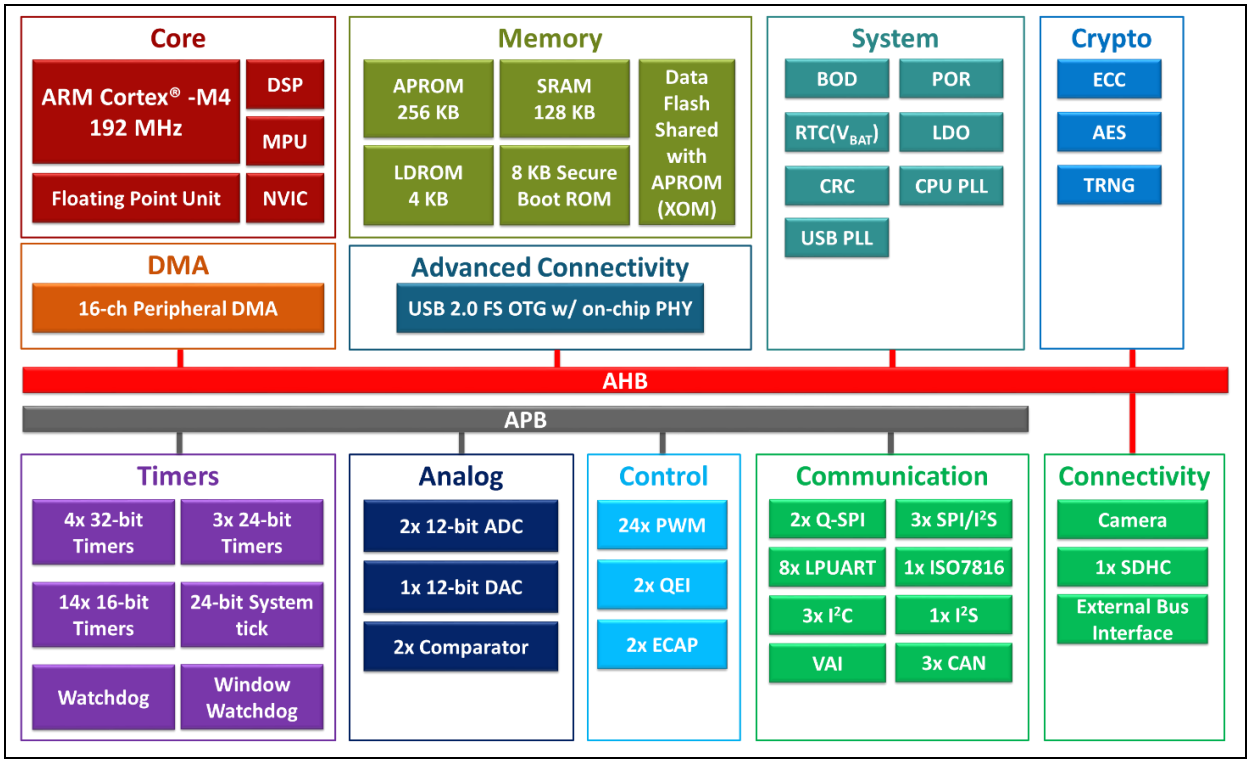

Figure 5.1-3 NuMicro® M480 Block Diagram (M48xGC)

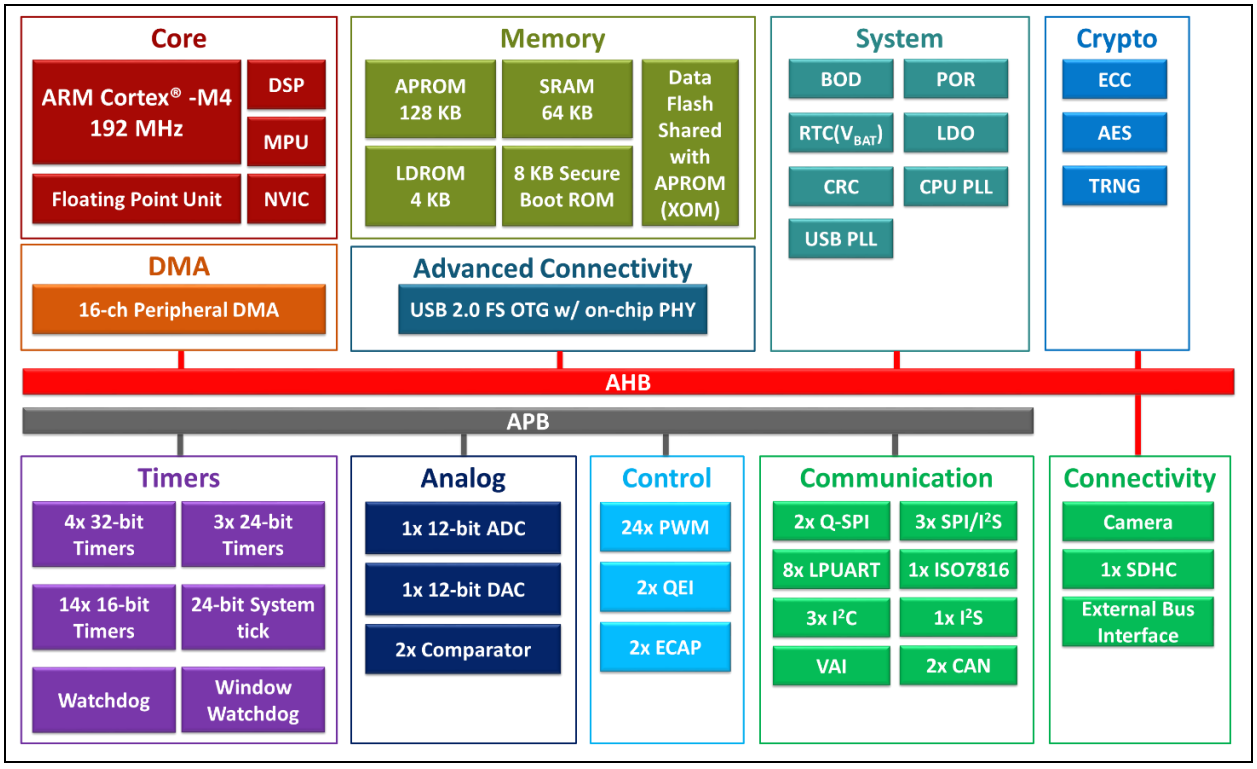

Figure 5.1-4 NuMicro® M480 Block Diagram (M48xE8)

6 FUNCTIONAL DESCRIPTION

6.1 Arm® Cortex®-M4F Core

The Cortex®-M4 processor, a configurable, multistage, 32-bit RISC processor, has three AMBA AHB-Lite interfaces for best parallel performance and includes an NVIC component. The processor with optional hardware debug functionality can execute Thumb code and is compatible with other Cortex®-M profile processors. The profile supports two modes -Thread mode and Handler mode. Handler mode is entered as a result of an exception. An exception return can only be issued in Handler mode. Thread mode is entered on Reset, and can be entered as a result of an exception return. The Cortex®-M4F is a processor with the same capability as the Cortex®-M4 processor and includes floating point arithmetic functionality. The NuMicro® M480 series is embedded with Cortex®-M4F processor. Throughout this document, the name Cortex®-M4 refers to both Cortex®-M4 and Cortex®-M4F processors. Figure 6.1-1 shows the functional controller of the processor.

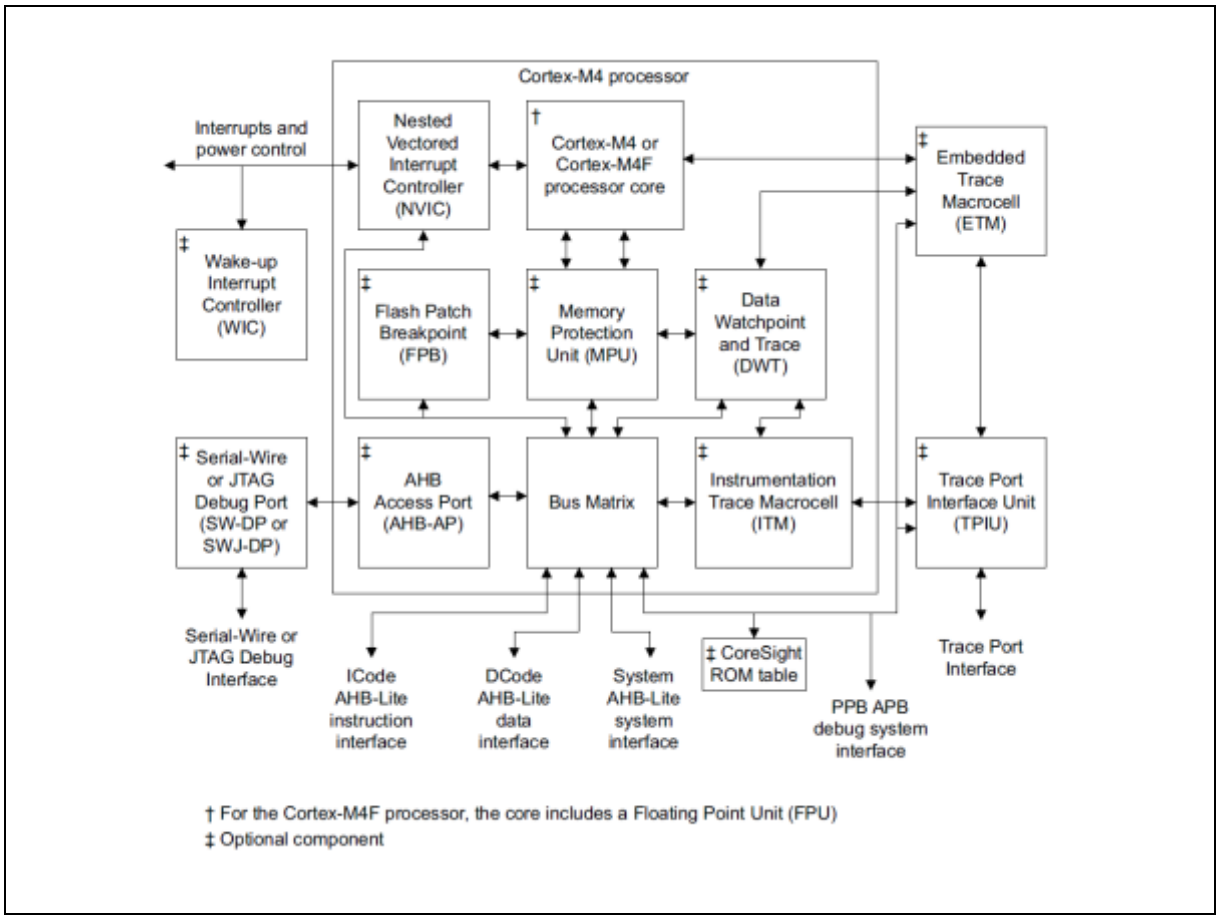

Figure 6.1-1 Cortex®-M4F Block Diagram

Cortex®-M4F processor features:

- A low gate count processor core, with low latency interrupt processing that has:
  - A subset of the Thumb instruction set, defined in the *Armv7-M Architecture Reference Manual*
  - Banked Stack Pointer (SP)
  - Hardware integer divide instructions, SDIV and UDIV
  - Handler and Thread modes
  - Thumb and Debug states
  - Support for interruptible-continued instructions LDM, STM, PUSH, and POP for low interrupt latency
  - Automatic processor state saving and restoration for low latency *Interrupt Service Routine (ISR)* entry and exit
  - Support for Armv6 big-endian byte-invariant or little-endian accesses
  - Support for Armv6 unaligned accesses
- Floating Point Unit (FPU) in the Cortex®-M4F processor providing:
  - 32-bit instructions for single-precision (C float) data-processing operations
  - Combined Multiply and Accumulate instructions for increased precision (Fused MAC)
  - Hardware support for conversion, addition, subtraction, multiplication with optional accumulate, division, and square-root
  - Hardware support for denormals and all IEEE rounding modes
  - 32 dedicated 32-bit single precision registers, also addressable as 16 double-word registers
  - Decoupled three stage pipeline
- Nested Vectored Interrupt Controller (NVIC) closely integrated with the processor core to achieve low latency interrupt processing. Features include:
  - External interrupts. Configurable from 1 to 240 (the NuMicro® M480 series configured with 64 interrupts)
  - Bits of priority, configurable from 3 to 8
  - Dynamic reprioritization of interrupts
  - Priority grouping which enables selection of preempting interrupt levels and nonpreempting interrupt levels
  - Support for tril-chaining and late arrival of interrupts, which enables back-to-back interrupt processing without the overhead of state saving and restoration between interrupts.
  - Processor state automatically saved on interrupt entry, and restored on interrupt exit with on instruction overhead
  - Support for Wake-up Interrupt Controller (WIC) with Ultra-low Power Sleep mode
- Memory Protection Unit (MPU). An optional MPU for memory protection, including:
  - Eight memory regions
  - Sub Region Disable (SRD), enabling efficient use of memory regions
  - The ability to enable a background region that implements the default memory map attributes

- Low-cost debug solution that features:
  - Debug access to all memory and registers in the system, including access to memory mapped devices, access to internal core registers when the core is halted, and access to debug control registers even while SYSRESETn is asserted.
  - Serial Wire Debug Port(SW-DP) or Serial Wire JTAG Debug Port (SWJ-DP) debug access
  - Optional Flash Patch and Breakpoint (FPB) unit for implementing breakpoints and code patches
  - Optional Data Watchpoint and Trace (DWT) unit for implementing watchpoints, data tracing, and system profiling
  - Optional Instrumentation Trace Macrocell (ITM) for support of printf() style debugging
  - Optional Trace Port Interface Unit (TPIU) for bridging to a Trace Port Analyzer (TPA), including Single Wire Output (SWO) mode
  - Optional Embedded Trace Macrocell (ETM) for instruction trace.
- Bus interfaces:
  - Three Advanced High-performance Bus-Lite (AHB-Lite) interfaces: ICode, Dcode, and System bus interfaces
  - Private Peripheral Bus (PPB) based on Advanced Peripheral Bus (APB) interface
  - Bit-band support that includes atomic bit-band write and read operations.
  - Memory access alignment
  - Write buffer for buffering of write data
  - Exclusive access transfers for multiprocessor systems

6.2 System Manager

6.2.1 Overview

System management includes the following sections:

- System Reset
- System Power Distribution
- SRAM Memory Orginization
- System Timer (SysTick)
- Nested Vectored Interrupt Controller (NVIC)
- System Control register

6.2.2 System Reset

The system reset can be issued by one of the events listed below. These reset event flags can be read from SYS_RSTSTS register to determine the reset source. Hardware reset sourcces are from peripheral signals. Software reset can trigger reset through setting control registers.

- Hardware Reset Sources
  - Power-on Reset
  - Low level on the nRESET pin
  - Watchdog Time-out Reset and Window Watchdog Reset (WDT/WWDT Reset)
  - Low Voltage Reset (LVR)
  - Brown-out Detector Reset (BOD Reset)
  - CPU Lockup Reset
- Software Reset Sources
  - CHIP Reset will reset whole chip by writing 1 to CHIPRST (SYS_IPRST0[0])
  - MCU Reset to reboot but keeping the booting setting from APROM or LDROM by writing 1 to SYSRESETREQ (AIRCR[2])
  - CPU Reset for Cortex®-M4 core only by writing 1 to CPURST (SYS_IPRST0[1])

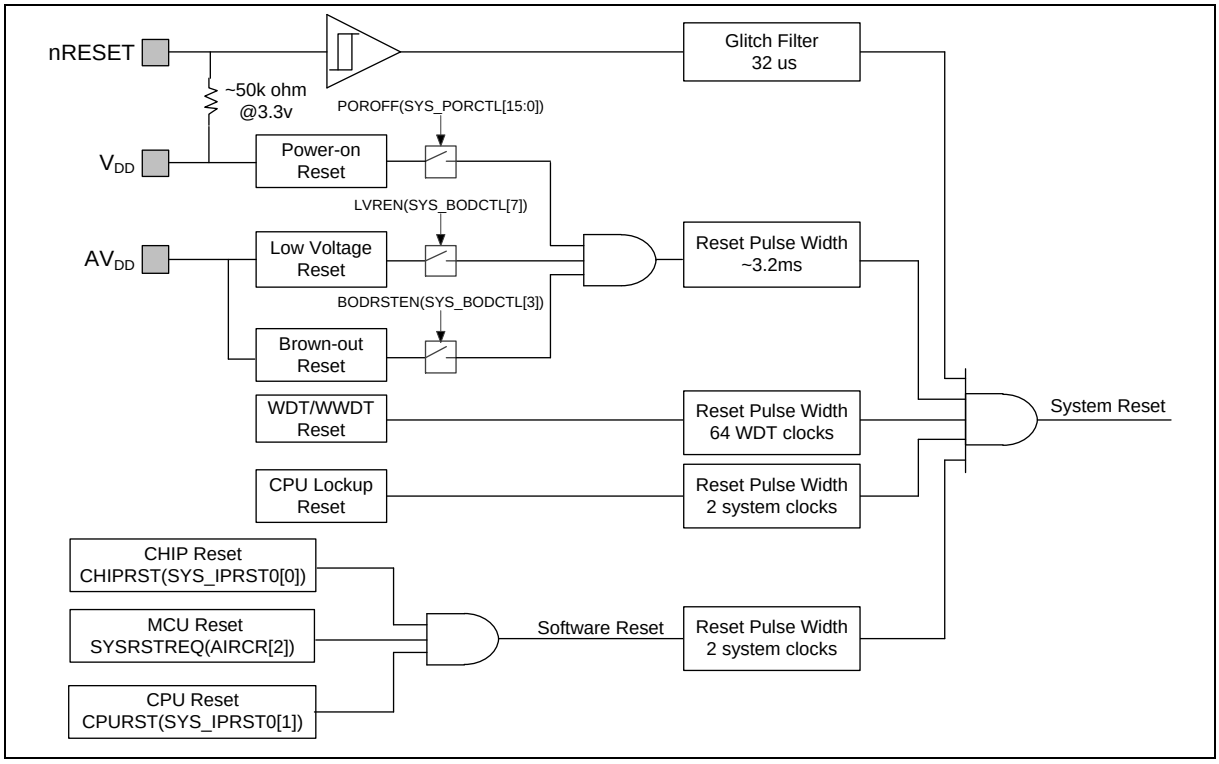

Figure 6.2-1 System Reset Sources

There are a total of 9 reset sources in the NuMicro® family. In general, CPU reset is used to reset Cortex®-M4 only; the other reset sources will reset Cortex®-M4 and all peripherals. However, there are small differences between each reset source and they are listed in Table 6.2-1.

Reset Sources Register	POR	nRESET	WDT	LVR	BOD	Lockup	CHIP	MCU	CPU
SYS_RSTSTS	Bit 0 = 1	Bit 1 = 1	Bit 2 = 1	Bit 3 = 1	Bit 4 = 1	Bit 8 = 1	Bit 0 = 1	Bit 5 = 1	Bit 7 = 1
CHIPRST (SYS_IPRST0[0])	0x0	-	-	-	-	-	-	-	-
BODEN (SYS_BODCTL[0])	Reload from CONFIG0	Reload from CONFIG0	Reload from CONFIG0	Reload from CONFIG0	-	Reload from CONFIG0	Reload from CONFIG0	Reload from CONFIG0	-
BODVL (SYS_BODCTL[2:1])									
BODRSTEN (SYS_BODCTL[3])									
HXTEN (CLK_PWRCTL[0])	Reload from CONFIG0	Reload from CONFIG0	Reload from CONFIG0	Reload from CONFIG0	Reload from CONFIG0	Reload from CONFIG0	Reload from CONFIG0	Reload from CONFIG0	
LXTEN (CLK_PWRCTL[1])	0x0	-	-	-	-	-	-	-	-
WDTCKEN (CLK_APBCLK0[0])	0x1	-	0x1	-	-	-	0x1	-	-
HCLKSEL	Reload from	Reload from	Reload from	Reload from	Reload from	Reload from	Reload from	Reload from	-

(CLK_CLKSEL0[2:0])	CONFIG0	CONFIG0	CONFIG0	CONFIG0	CONFIG0	CONFIG0	CONFIG0	CONFIG0	
WDTSEL (CLK_CLKSEL1[1:0])	0x3	0x3	-	-	-	-	-	-	-
HXTSTB (CLK_STATUS[0])	0x0	-	-	-	-	-	-	-	-
LXTSTB (CLK_STATUS[1])	0x0	-	-	-	-	-	-	-	-
PLLSTB (CLK_STATUS[2])	0x0	-	-	-	-	-	-	-	-
HIRCSTB (CLK_STATUS[4])	0x0	-	-	-	-	-	-	-	-
CLKSFAIL (CLK_STATUS[7])	0x0	0x0	-	-	-	-	-	-	-
RSTEN (WDT_CTL[1]) WDTEN (WDT_CTL[7])	Reload from CONFIG0	Reload from CONFIG0	Reload from CONFIG0	Reload from CONFIG0	Reload from CONFIG0	-	Reload from CONFIG0	-	-
WDT_CTL except bit 1 and bit 7.	0x0700	0x0700	0x0700	0x0700	0x0700	-	0x0700	-	-
WDT_ALTCTL	0x0000	0x0000	0x0000	0x0000	0x0000	-	0x0000	-	-
WWDT_RLDCNT	0x0000	0x0000	0x0000	0x0000	0x0000	-	0x0000	-	-
WWDT_CTL	0x3F0800	0x3F0800	0x3F0800	0x3F0800	0x3F0800	-	0x3F0800	-	-
WWDT_STATUS	0x0000	0x0000	0x0000	0x0000	0x0000	-	0x0000	-	-
WWDT_CNT	0x3F	0x3F	0x3F	0x3F	0x3F	-	0x3F	-	-
BS (FMC_ISPCTL[1]) BL (FMC_ISPCTL[16])	Reload from CONFIG0	Reload from CONFIG0	Reload from CONFIG0	Reload from CONFIG0	Reload from CONFIG0	-	Reload from CONFIG0	-	-
FMC_DFBA	Reload from CONFIG1	Reload from CONFIG1	Reload from CONFIG1	Reload from CONFIG1	Reload from CONFIG1	-	Reload from CONFIG1	-	-
CBS (FMC_ISPSTS[2:1])	Reload from CONFIG0	Reload from CONFIG0	Reload from CONFIG0	Reload from CONFIG0	Reload from CONFIG0	-	Reload from CONFIG0	-	-
VECMAP (FMC_ISPSTS[23:9])	Reload base on CONFIG0	Reload base on CONFIG0	Reload base on CONFIG0	Reload base on CONFIG0	Reload base on CONFIG0	-	Reload base on CONFIG0	-	-
Other Peripheral Registers	Reset Value								-
FMC Registers	Reset Value								
Note: '-' means that the value of register keeps original setting.									

Table 6.2-1 Reset Value of Registers

6.2.2.1 nRESET Reset

The nRESET reset means to generate a reset signal by pulling low nRESET pin, which is an asynchronous reset input pin and can be used to reset system at any time. When the nRESET voltage is lower than 0.2 V_{DD} and the state keeps longer than 32 us (glitch filter), chip will be reset. The nRESET reset will control the chip in reset state until the nRESET voltage rises above 0.7 V_{DD} and the state keeps longer than 32 us (glitch filter). The PINRF(SYS_RSTSTS[1]) will be set to 1 if the previous reset source is nRESET reset Figure 6.2-2 shows the nRESET reset waveform.

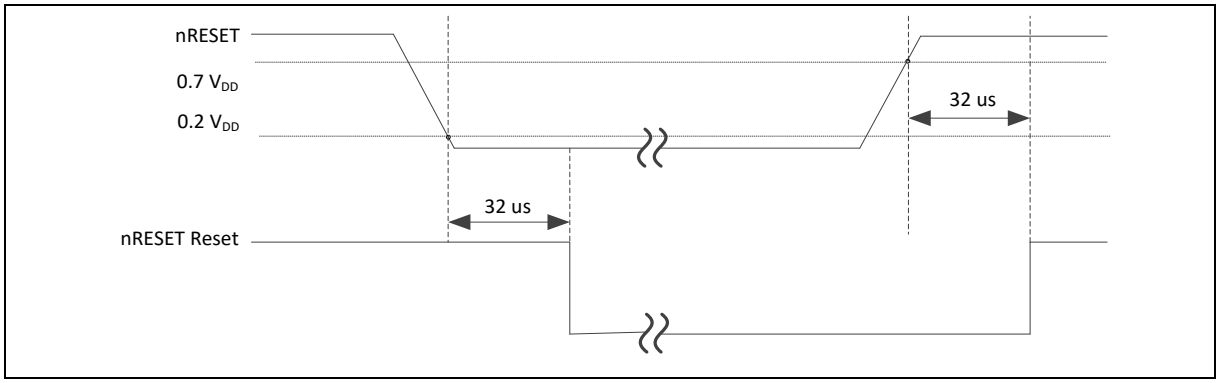

Figure 6.2-2 nRESET Reset Waveform

6.2.2.2 Power-on Reset (POR)

The Power-on reset (POR) is used to generate a stable system reset signal and forces the system to be reset when power-on to avoid unexpected behavior of MCU. When applying the power to MCU, the POR module will detect the rising voltage and generate reset signal to system until the voltage is ready for MCU operation. At POR reset, the PORF(SYS_RSTSTS[0]) will be set to 1 to indicate there is a POR reset event. The PORF(SYS_RSTSTS[0]) bit can be cleared by writing 1 to it. Figure 6.2-3 shows the power-on reset waveform.

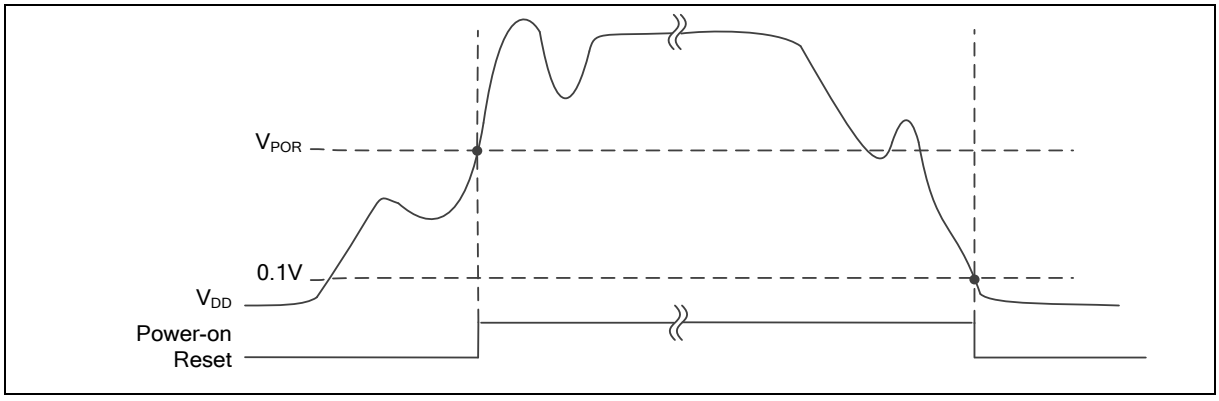

Figure 6.2-3 Power-on Reset (POR) Waveform

6.2.2.3 Low Voltage Reset (LVR)

If the Low Voltage Reset function is enabled by setting the Low Voltage Reset Enable Bit LVREN (SYS_BODCTL[7]) to 1, after 200us delay, LVR detection circuit will be stable and the LVR function will be active. Then LVR function will detect AV_{DD} during system operation. When the AV_{DD} voltage is lower than V_{LVR} and the state keeps longer than De-glitch time set by LVRDGSEL (SYS_BODCTL[14:12]), chip will be reset. The LVR reset will control the chip in reset state until the AV_{DD} voltage rises above

V_{LVR} and the state keeps longer than De-glitch time set by LVRDGSEL (SYS_BODCTL[14:12]). The default setting of Low Voltage Reset is enabled without De-glitch function. Figure 6.2-4 shows the Low Voltage Reset waveform.

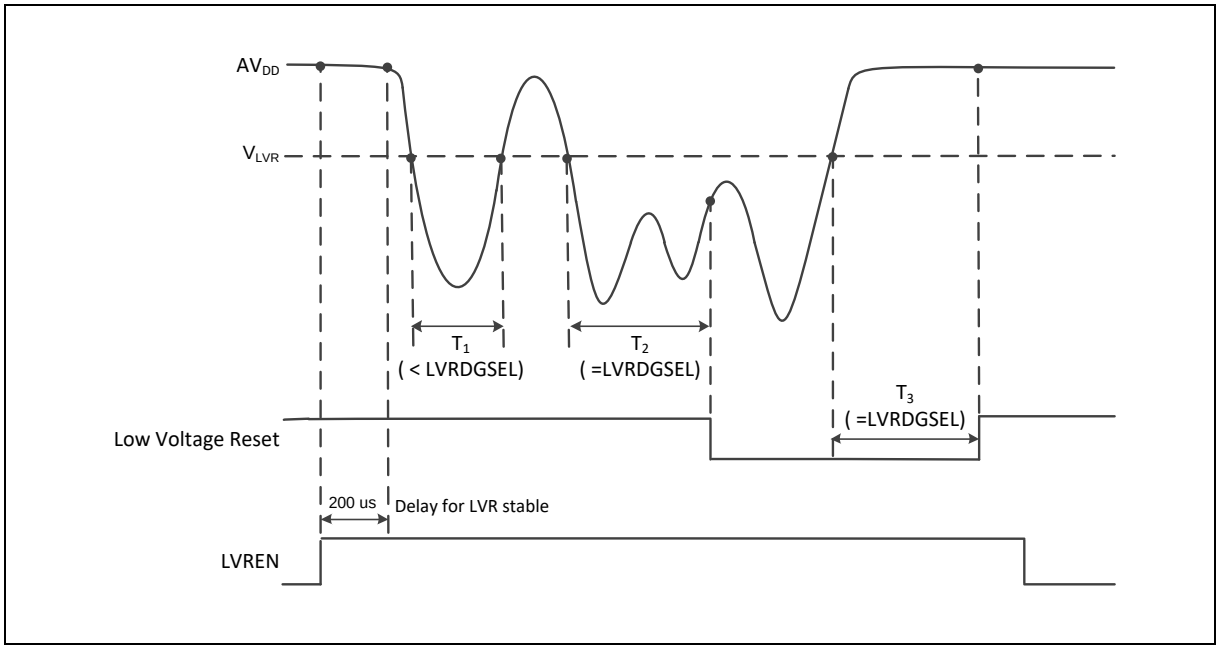

Figure 6.2-4 Low Voltage Reset (LVR) Waveform

6.2.2.4 Brown-out Detector Reset (BOD Reset)

If the Brown-out Detector (BOD) function is enabled by setting the Brown-out Detector Enable Bit BODEN (SYS_BODCTL[0]), Brown-out Detector function will detect AV_{DD} during system operation. When the AV_{DD} voltage is lower than V_{BOD} which is decided by BODEN and BODVL (SYS_BODCTL[18:16]) and the state keeps longer than De-glitch time set by BODDGSEL (SYS_BODCTL[10:8]), chip will be reset. The BOD reset will control the chip in reset state until the AV_{DD} voltage rises above V_{BOD} and the state keeps longer than De-glitch time set by BODDGSEL. The default value of BODEN, BODVL and BODRSTEN (SYS_BODCTL[3]) is set by Flash controller user configuration register CBODEN (CONFIG0 [19]), CBOV (CONFIG0 [23:21]) and CBORST(CONFIG0[20]) respectively. User can determine the initial BOD setting by setting the CONFIG0 register. Figure 6.2-5 shows the Brown-out Detector waveform.

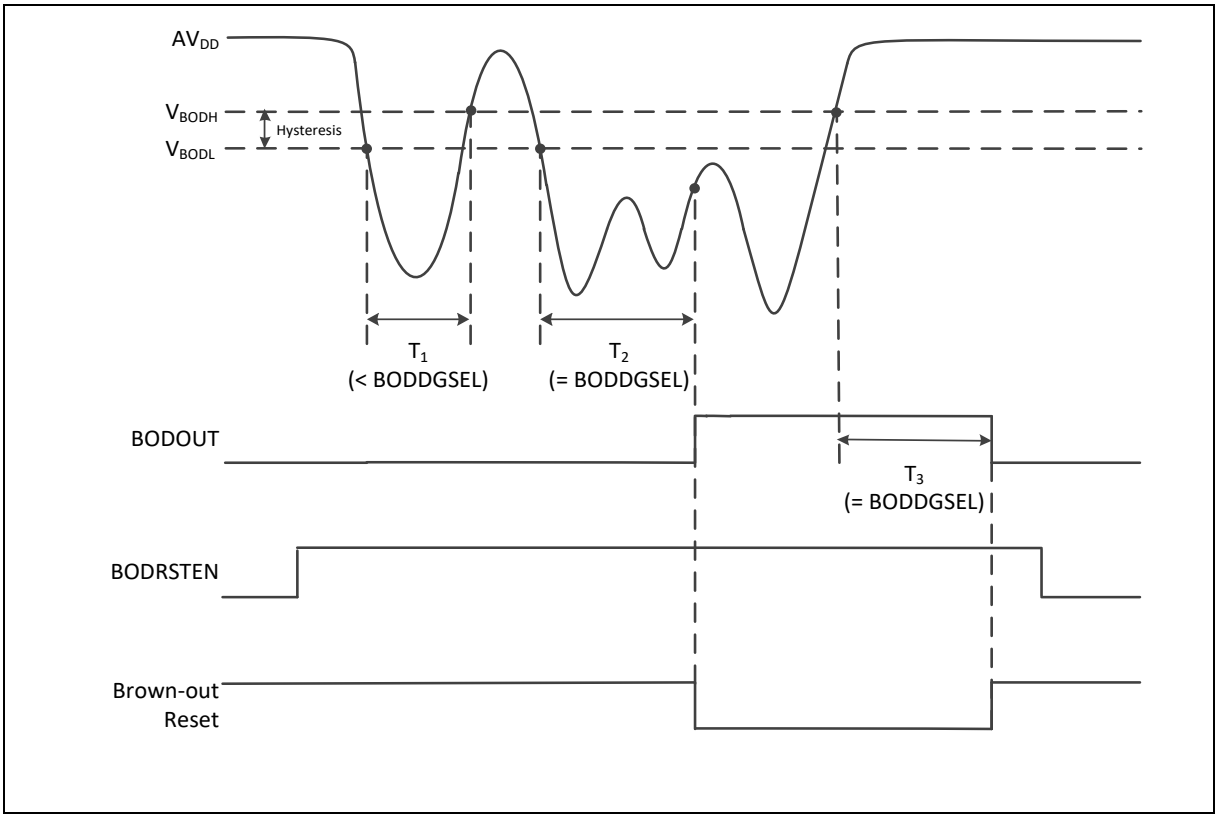

Figure 6.2-5 Brown-out Detector (BOD) Waveform

6.2.2.5 Watchdog Timer Reset (WDT)

In most industrial applications, system reliability is very important. To automatically recover the MCU from failure status is one way to improve system reliability. The watchdog timer(WDT) is widely used to check if the system works fine. If the MCU is crashed or out of control, it may cause the watchdog time-out. User may decide to enable system reset during watchdog time-out to recover the system and take action for the system crash/out-of-control after reset.

Software can check if the reset is caused by watchdog time-out to indicate the previous reset is a watchdog reset and handle the failure of MCU after watchdog time-out reset by checking WDTRF(SYS_RSTSTS[2]).

6.2.2.6 CPU Lockup Reset

CPU enters lockup status after CPU produces hardfault at hardfault handler and chip gives immediate indication of seriously errant kernel software. This is the result of the CPU being locked because of an unrecoverable exception following the activation of the processor's built in system state protection hardware. When chip enters debug mode, the CPU lockup reset will be ignored.

6.2.2.7 CPU Reset, CHIP Reset and MCU Reset

The CPU Reset means only Cortex®-M4 core is reset and all other peripherals remain the same status after CPU reset. User can set the CPURST(SYS_IPRST0[1]) to 1 to assert the CPU Reset signal.

The CHIP Reset is same with Power-on Reset. The CPU and all peripherals are reset and BS(FMC_ISPCTL[1]) bit is automatically reloaded from CONFIG0 setting. User can set the CHIPRST(SYS_IPRST0[1]) to 1 to assert the CHIP Reset signal.

The MCU Reset is similar with CHIP Reset. The difference is that BS(FMC_ISPCTL[1]) will not be reloaded from CONFIG0 setting and keep its original software setting for booting from APROM or LDROM. User can set the SYSRESETREQ(AIRCR[2]) to 1 to assert the MCU Reset.

6.2.3 System Power Distribution

In this chip, power distribution is divided into four segments:

- Analog power from AV_{DD} and AV_{SS} provides the power for analog components operation.
- Digital power from V_{DD} and V_{SS} supplies the power to the internal regulator which provides a fixed 1.8 V power for digital operation and I/O pins.
- USB transceiver power from V_{BUS} offers the power for operating the USB transceiver.
- RTC power from V_{BAT} provides the power for RTC and 80 bytes backup registers.

The outputs of internal voltage regulators, LDO and V_{DD33}, require an external capacitor which should be located close to the corresponding pin. Analog power (AV_{DD}) should be the same voltage level of the digital power (V_{DD}). Figure 6.2-6 shows the NuMicro® M480 power distribution.

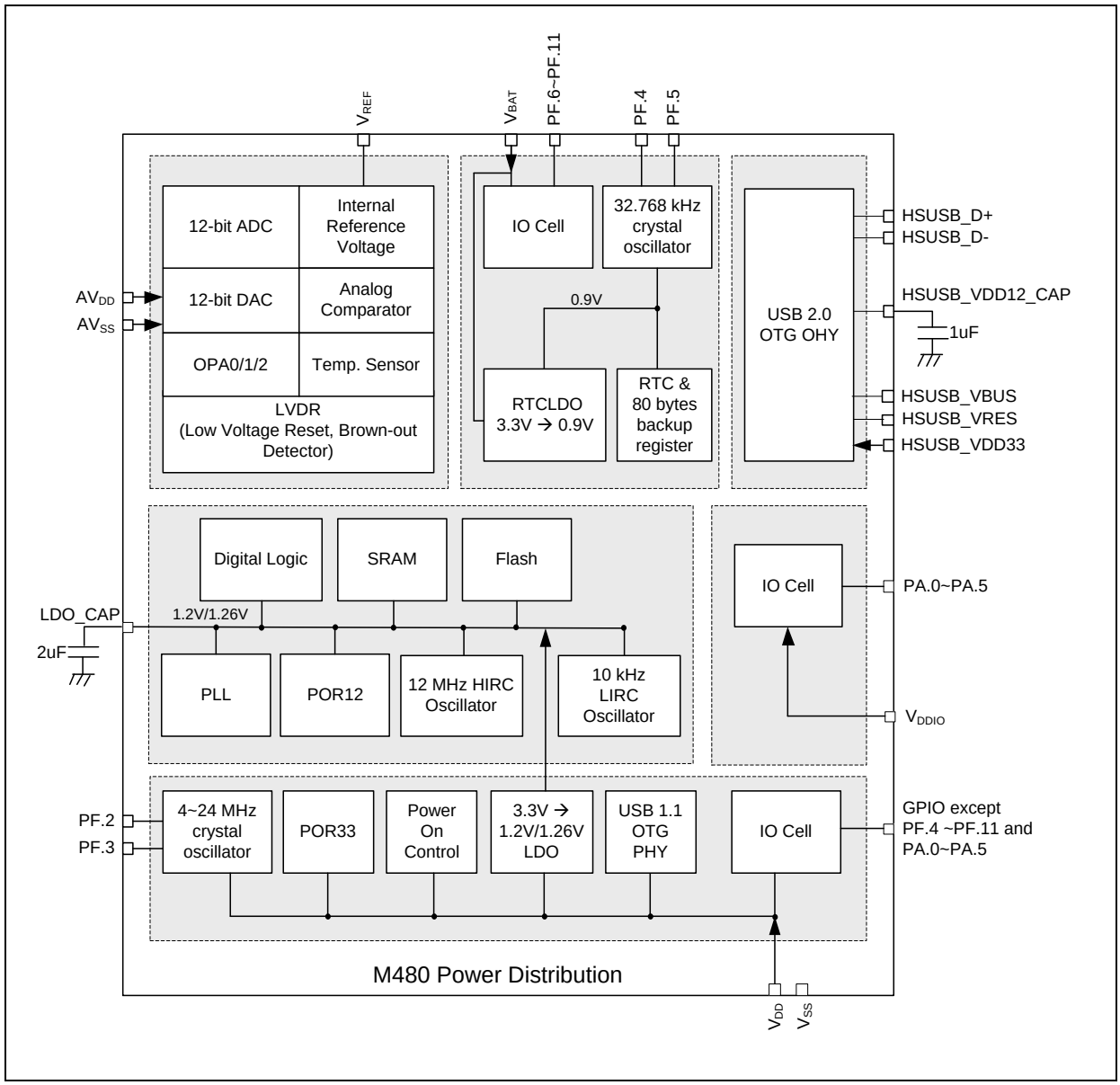

Figure 6.2-6 NuMicro® M480 Power Distribution Diagram

Note:

1. When V_{BAT} power source first power-on, the power-on reset will happened and reset all V_{BAT} domain circuit. The I/O in V_{BAT} domain (PF.4 ~ PF.11) will become floating state and make additional leakage in V_{BAT} domain. User should power on V_{DD} first to reset chip and set I/O control to make these I/Os becomes a static state to prevent additional leakage .
2. The V_{BAT} domain I/O (PF.4 ~ PF.11) will have unpredictable 1.5V glitch during power-on if V_{BAT} and V_{DD} connect together. To prevent this unpredictable glitch to make , user should avoid use these pins to be other IC's active or inactive control pins.

6.2.4 Power Modes and Wake-up Sources

The NuMicro® M480 series has power manager unit to support several operating modes for saving power. Table 6.2-2 lists all power mode at NuMicro® M480 series.

Mode	CPU Operating Maximum Speed (MHz)	LDO_CAP (V)	Clock Disable
Normal mode	160	1.20	All clocks are disabled by control register.
Turbo mode	192	1.26	All clocks are disabled by control register.
Idle mode	CPU enter Sleep mode	1.20/1.26	Only CPU clock is disabled.
Fast Wakeup Power-down mode (FWPD)	CPU enters Deep Sleep mode	1.20/1.26	Most clocks are disabled except LIRC/LXT, and only RTC/WDT/Timer/UART peripheral clocks still enable if their clock sources are selected as LIRC/LXT.
Normal Power-down mode (NPD)	CPU enters Deep Sleep mode	1.20/1.26	Most clocks are disabled except LIRC/LXT, and only RTC/WDT/Timer/UART peripheral clocks still enable if their clock sources are selected as LIRC/LXT.
Low leakage Power-down mode (LLPD)	CPU enters Deep Sleep mode	0.9	Most clocks are disabled except LIRC/LXT, and only RTC/WDT/Timer/UART peripheral clocks still enable if their clock sources are selected as LIRC/LXT.
Standby Power-down mode (SPD0)	Power off	Floating	Only LIRC/LXT still enable for RTC function and wake-up timer usage
Standby Power-down mode (SPD1) (M48xID/M487KMCAN)	Power off	Floating	Only LIRC/LXT still enable for RTC function and wake-up timer usage
Deep Power-down mode (DPD)*	Power off	Floating	Only LIRC/LXT still enable for RTC function and wake-up timer usage
*M487KMCAN doesn't support Deep Power-down mode (DPD)			

Table 6.2-2 Power Mode Table

Note:

1. User must turn on LIRC before entering SPD0/1 mode.
2. SPD0 mode has 32KB data retention in SRAM bank0. (M48xID/M487KMCAN)
3. SPD0 mode data retension size is configurable. (M48xGC/M48xE8)

There are different power mode entry setting For each power mode, they have different entry setting and leaving condition. Table 6.2-3 shows the entry setting for each power mode. When chip power-on, chip is running ar normal mode. User can enter each mode by setting SLEEPDEEP (SCR[2]), PDEN (CLK_PWRCT:[7]) and PDMSEL (CLK_PMUCTL[2:0]) and execute WFI instruction. And

Register/Instruction Mode	SLEEPDEEP (SCR[2])	PDEN (CLK_PWRCTL[7])	PDMSEL (CLK_PMUCTL[2:0])	CPU Run WFI Instruction
Normal mode	0	0	0	NO
Idle mode	0	0	0	YES
Fast Wakeup Power-down mode	1	1	2	YES
Normal Power-down mode	1	1	0	YES
Low leakage Power-down mode	1	1	1	YES
Standby Power-down mode 0	1	1	4	YES
Standby Power-down mode 1	1	1	5	YES
Deep Power-down mode*	1	1	6	YES
*M487KMCAN doesn't support Deep Power-down mode (DPD)				

Table 6.2-3 Power Mode Difference Table

There are several wake-up sources in Idle mode and Power-down mode. Table 6.2-4 lists the available clocks for each power mode.

Power Mode	Normal Mode	Idle Mode	Power-Down Mode
Definition	CPU is in active state	CPU is in sleep state	CPU is in sleep state and all clocks stop except LXT and LIRC. SRAM content retended.
Entry Condition	Chip is in normal mode after system reset released	CPU executes WFI instruction.	CPU sets sleep mode enable and power down enable and executes WFI instruction.
Wake-up Sources	N/A	All interrupts	RTC, WDT, I²C, Timer, UART, BOD, GPIO, EINT, USCI, USBD, ACMP and BOD.
Available Clocks	All	All except CPU clock	LXT and LIRC
After Wake-up	N/A	CPU back to normal mode	CPU back to normal mode

Table 6.2-4 Power Mode Definition Table

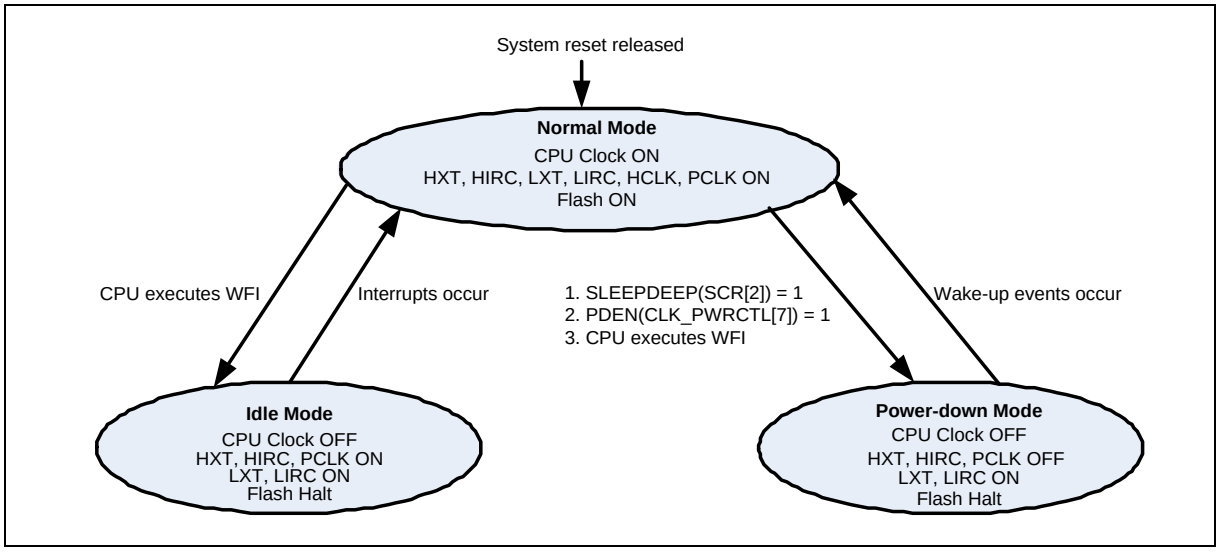

Figure 6.2-7 Power Mode State Machine

	Idle Mode	NPD, LLPD, FWPD	SPD	DPD
HXT	ON	Halt	Halt	Halt
HIRC	ON	Halt	Halt	Halt
LXT	ON	ON/OFF[1]	ON/OFF[1]	ON/OFF[1]
LIRC	ON	ON/OFF[2]	ON/OFF[2]	ON/OFF[2,8]
PLL	ON	Halt	Halt	Halt
HCLK/PCLK	ON	Halt	Halt	Halt
CPU	Halt	Halt	Halt	Halt
SRAM retention	ON	ON	ON/OFF[7]	Halt
FLASH	ON	Halt	Halt	Halt
TIMER	ON	ON/OFF[3]	Halt	Halt
WDT	ON	ON/OFF[4]	Halt	Halt
RTC (LXT)	ON	ON/OFF[5]	ON/OFF[5]	ON/OFF[5]
UART	ON	ON/OFF[6]	Halt	Halt
Others	ON	Halt	Halt	Halt

Table 6.2-5 Clocks in Power Modes

Note:

1. LXT ON or OFF depends on SW setting in normal mode.
2. LIRC ON or OFF depends on S/W setting in normal mode.
3. If TIMER clock source is selected as LIRC/LXT and LIRC/LXT is on.
4. If WDT clock source is selected as LIRC and LIRC is on.
5. If RTC clock source is selected as LXT and LXT is on.
6. If UART clock source is selected as LXT and LXT is on.

7. SRAM retention size depends on SW setting in normal mode.
8. If timer wake up function is disabled, LIRC will be disabled automatically when chip enter DPD mode for power saving.

Wake-up sources in Normal Power-down mode (NPD):

RTC, WDT, I²C, Timer, UART, USCI, BOD, EBOD, GPIO, USBD, and ACMP.

After chip enters power down, the following wake-up sources can wake chip up to normal mode. Table 6.2-6 lists the condition about how to enter Power-down mode again for each peripheral.

User needs to wait this condition before setting PDEN(CLK_PWRCTL[7]) and execute WFI to enter Power-down mode.

Wake-Up Source	Wake-Up Condition	Power-Down Mode			Re-Entering Power-Down Mode Condition
		NPD/ FWPD/ LLPD	SPD	DPD	
BOD	Brown-Out Detector Reset / Interrupt	V	-	-	After software writes 1 to clear BODIF (SYS_BODCTL[4]).
	Brown-Out Detector Reset	-	V	-	After software writes 1 (CLK_PMUSTS[31]) to clear BODWK (CLK_PMUSTS[13]) when SPD mode is entered.
LVR	LVR Reset	V	-	-	After software writes 1 to clear LVRF (SYS_RSTSTS[3])
		-	V	-	After software writes 1 (CLK_PMUSTS[31]) to clear LVRWK (CLK_PMUSTS[12]) when SPD mode is entered.
POR	POR Reset	V	V	-	After software writes 1 to clear PORF (SYS_RSTSTS[0])
INT	External Interrupt	V	-	-	After software write 1 to clear the Px_INTSRC[n] bit.
GPIO	GPIO Interrupt	V	-	-	After software write 1 to clear the Px_INTSRC[n] bit.
GPIO(PA~PD) Wake-up pin	rising or falling edge event, 64-pin	-	V	-	After software writes 1 (CLK_PMUSTS[31]) to clear GPxWK (CLK_PMUSTS[11:8]) when SPD mode is entered.
GPIO(PC.0) Wake-up pin	rising or falling edge event , 1-pin	-	-	V	After software writes 1 (CLK_PMUSTS[31]) to clear PINWK0 (CLK_PMUSTS[0]) when DPD mode is entered. (M48xID Only)
GPIO(PC.0/PB.0/PB.2/PB.12/PF.6) Wake-up pin	rising or falling edge event, 5-pin	-	-	V	After software writes 1 (CLK_PMUSTS[31]) to clear PINWKx (CLK_PMUSTS[6:3] and CLK_PMUSTS[0]) when DPD mode is entered. (M48xGC/M48xE8 Only)
TIMER	Timer Interrupt	V	-	-	After software writes 1 to clear TWKF (TIMERx_INTSTS[1]) and TIF (TIMERx_INTSTS[0]).
Wakeup timer	Wakeup by wake-up timer time-out	-	V	V	After software writes 1 (CLK_PMUSTS[31]) to clear TMRWK (CLK_PMUSTS[1]) when SPD or DPD mode is entered.

Wake-Up Source	Wake-Up Condition	Power-Down Mode			Re-Entering Power-Down Mode Condition
		NPD/ FWPD/ LLPD	SPD	DPD	
WDT	WDT Interrupt	V	-	-	After software writes 1 to clear WKF (WDT_CTL[5]) (Write Protect).
RTC	Alarm Interrupt	V	-	-	After software writes 1 to clear ALMIF (RTC_INTSTS[0]).
	Time Tick Interrupt	V	-	-	After software writes 1 to clear TICKIF (RTC_INTSTS[1]).
	Wakeup by RTC alarm	-	V	V (M48xGC/ M48xE8)	After software writes 1 (CLK_PMUSTS[31]) to clear RTCWK (CLK_PMUSTS[2]) when DPD or SPD mode is entered.
	Wakeup by RTC tick time	-	V	V (M48xGC/ M48xE8)	After software writes 1 (CLK_PMUSTS[31]) to clear RTCWK (CLK_PMUSTS[2]) when DPD or SPD mode is entered.
	Wakeup by tamper event	-	V	V (M48xGC/ M48xE8)	After software writes 1 (CLK_PMUSTS[31]) to clear RTCWK (CLK_PMUSTS[2]) when DPD or SPD mode is entered.
UART	nCTS wake-up	V	-	-	After software writes 1 to clear CTSWKF (UARTx_WKSTS[0]).
	RX Data wake-up	V	-	-	After software writes 1 to clear DATWKF (UARTx_WKSTS[1]).
	Received FIFO Threshold Wake-up	V	-	-	After software writes 1 to clear RFRTWKF (UARTx_WKSTS[2]).
	RS-485 AAD Mode Wake-up	V	-	-	After software writes 1 to clear RS485WKF (UARTx_WKSTS[3]).
	Received FIFO Threshold Time-out Wake-up	V	-	-	After software writes 1 to clear TOUTWKF (UARTx_WKSTS[4]).
USCI UART	CTS Toggle	V	-	-	After software writes 1 to clear WKF (UUART_WKSTS[0]).
	Data Toggle	V	-	-	After software writes 1 to clear WKF (UUART_WKSTS[0]).
USCI I^2C	Data toggle	V	-	-	After software writes 1 to clear WKF (UI2C_WKSTS[0]).
	Address match	V	-	-	After software writes 1 to clear WKAKDONE (UI2C_PROTSTS[16], then writes 1 to clear WKF (UI2C_WKSTS[0]).
USCI SPI	SS Toggle	V	-	-	After software writes 1 to clear WKF (USPI_WKSTS[0]).
I^2C	Address match wake-up	V	-	-	After software writes 1 to clear WKAKDONE (I^2C_WKSTS[1]). Then software writes 1 to clear WKIF(I^2C_WKSTS[0]).

Wake-Up Source	Wake-Up Condition	Power-Down Mode			Re-Entering Power-Down Mode Condition
		NPD/ FWPD/ LLPD	SPD	DPD	
USBD	Remote Wake-up	V	-	-	After software writes 1 to clear BUSIF (USBD_INTSTS[0]).
ACMP	Comparator Power-Down Wake-Up Interrupt	V	-	-	After software writes 1 to clear WKIF0 (ACMP_STATUS[8]) and WKIF1 (ACMP_STATUS[9]).
ACMP	ACMPO status change	-	V	-	After software writes 1 (CLK_PMUSTS[31]) to clear ACMPWK (CLK_PMUSTS[14]) when SPD mode is entered.

Table 6.2-6 Re-Entering Power-down Mode Condition

6.2.5 Power Modes and Power Level Transition

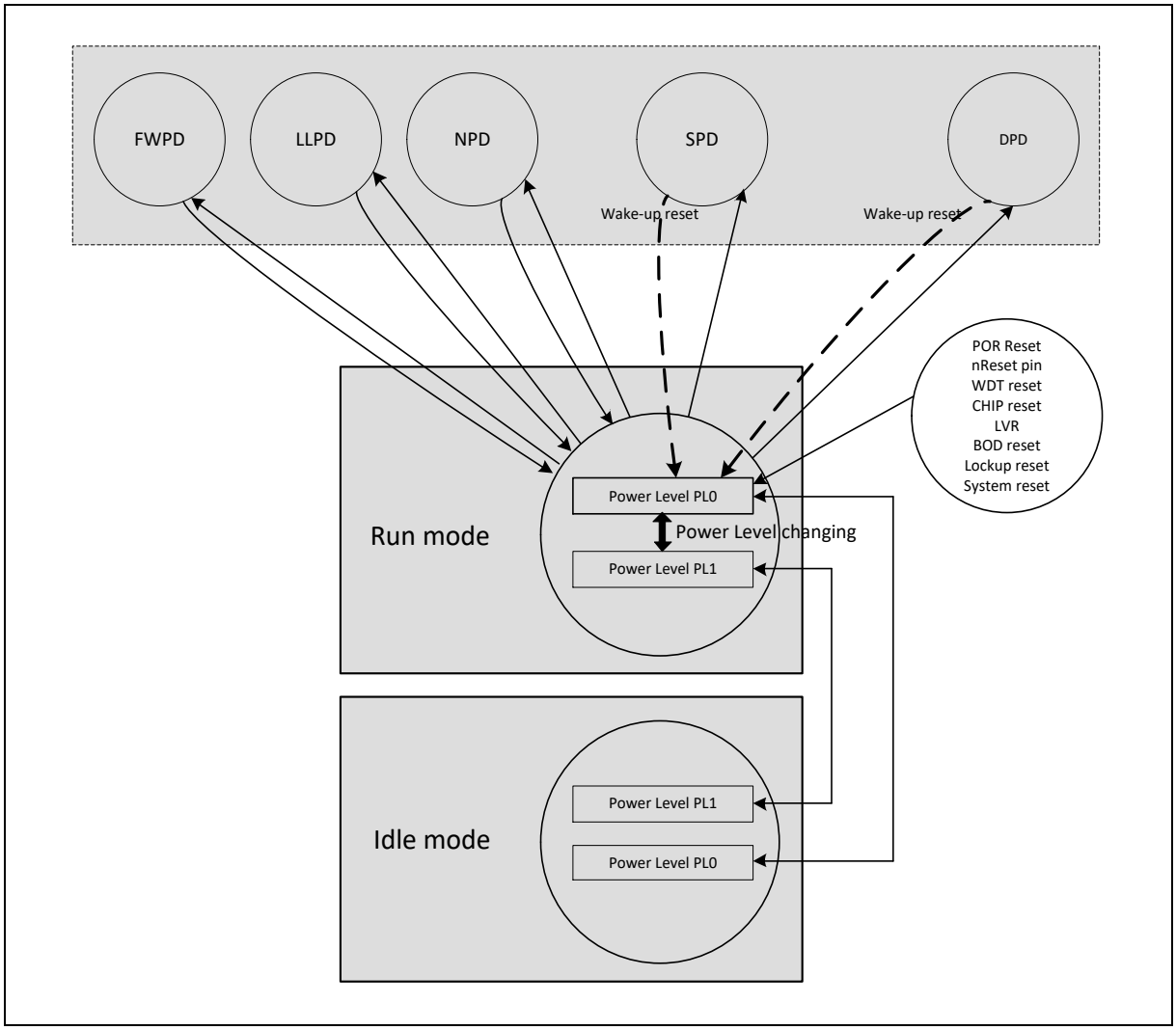

Figure 6.2-8 NuMicro® M480 Power Distribution Diagram

6.2.6 System Memory Map

The NuMicro® M480 series provides 4G-byte addressing space. The memory locations assigned to each on-chip controllers are shown in Table 6.2-7. The detailed register definition, memory space, and programming will be described in the following sections for each on-chip peripheral. The NuMicro® M480 series only supports little-endian data format.

Address Space	Token	Controllers
Flash and SRAM Memory Space		
0x0000_0000 – 0x0003_FFFF	FLASH_BA	FLASH Memory Space (256 Kbytes)
0x0000_0000 – 0x0007_FFFF	FLASH_BA	FLASH Memory Space (512 Kbytes)
0x0800_0000 – 0x09FF_FFFF	SPIM_BA	SPIM Memory Space (32 Mbytes) (M48xID)
0x0800_0000 – 0x081F_FFFF	SPIM_BA	Embedded SPI Flash Space(2 Mbytes) (M487KMCAN)
0x2000_0000 – 0x2000_7FFF	SRAM0_BA	SRAM Memory Space (32 Kbytes)
0x2000_8000 – 0x2001_FFFF	SRAM1_BA	SRAM Memory Space (96 Kbytes)
0x2002_0000 – 0x2002_7FFF	SRAM2_BA	SRAM Memory Space (32 Kbytes) for CPU only and share with SPIM cache
0x6000_0000 – 0x6FFF_FFFF	EXTMEM_BA	External Memory Space (256 Mbytes)
Peripheral Controllers Space (0x4000_0000 – 0x400F_FFFF)		
0x4000_0000 – 0x4000_01FF	SYS_BA	System Control Registers
0x4000_0200 – 0x4000_02FF	CLK_BA	Clock Control Registers
0x4000_0300 – 0x4000_03FF	NMI_BA	NMI Control Registers
0x4000_4000 – 0x4000_4FFF	GPIO_BA	GPIO Control Registers
0x4000_7000 – 0x4000_7FFF	SPIM_BA	SPIM Control Registers
0x4000_8000 – 0x4000_8FFF	PDMA_BA	Peripheral DMA Control Registers
0x4000_9000 – 0x4000_9FFF	USBH_BA	USB Host Control Registers
0x4000_B000 – 0x4000_BFFF	EMAC_BA	Ethernet MAC Control Registers
0x4000_C000 – 0x4000_CFFF	FMC_BA	Flash Memory Control Registers
0x4000_D000 – 0x4000_DFFF	SDH0_BA	SDHOST0 Control Registers
0x4000_E000 – 0x4000_EFFF	SDH1_BA	SDHOST1 Control Registers
0x4001_0000 – 0x4001_0FFF	EBI_BA	External Bus Interface Control Registers
0x4001_9000 – 0x4001_9FFF	HSUSBD_BA	HSUSBD Control Registers
0x4001_A000 – 0x4001_AFFF	HSUSBH _BA	HSUSBH Host Control Registers
0x4003_0000 – 0x4003_0FFF	CCAP_BA	CCAP Control Registers
0x4003_1000 – 0x4003_1FFF	CRC_BA	CRC Generator Registers
0x4003_E000 – 0x4003_EFFF	SWDC_BA	SWD Control Registers
0x4003_F000 – 0x4003_FFFF	ETMC_BA	ETM Control Registers
0x5008_0000 – 0x5008_0FFF	CRYP_BA	Cryptographic Accelerator Registers
APB Controllers Space (0x4000_0000 ~ 0x400F_FFFF)		

Address Space	Token	Controllers
0x4004_0000 – 0x4004_0FFF	WDT_BA	Watchdog Timer Control Registers
0x4004_1000 – 0x4004_1FFF	RTC_BA	Real Time Clock (RTC) Control Register
0x4004_3000 – 0x4004_3FFF	EADC0_BA	Enhanced Analog-Digital-Converter 0 (EADC0) Control Registers
0x4004_5000 – 0x4004_5FFF	ACMP01_BA	Analog Comparator 0/ 1 Control Registers
0x4004_6000 – 0x4004_6FFF	OPA_BA	OP Amplifier Control Registers
0x4004_7000 – 0x4004_7FFF	DAC_BA	DAC Control Registers
0x4004_8000 – 0x4004_8FFF	I^2S0_BA	I^2S0 Interface Control Registers
0x4004_B000 – 0x4004_BFFF	EADC1_BA	Enhanced Analog-Digital-Converter 1 (EADC1) Control Registers
0x4004_D000 – 0x4004_DFFF	OTG_BA	OTG Control Registers
0x4004_F000 – 0x4004_FFFF	HSOTG_BA	HSOTG Control Registers
0x4005_0000 – 0x4005_0FFF	TMR01_BA	Timer0/Timer1 Control Registers
0x4005_1000 – 0x4005_1FFF	TMR23_BA	Timer2/Timer3 Control Registers
0x4005_8000 – 0x4005_8FFF	EPWM0_BA	EPWM0 Control Registers
0x4005_9000 – 0x4005_9FFF	EPWM1_BA	EPWM1 Control Registers
0x4005_A000 – 0x4005_AFFF	BPWM0_BA	BPWM0 Control Registers
0x4005_B000 – 0x4005_BFFF	BPWM1_BA	BPWM1 Control Registers
0x4006_0000 – 0x4006_0FFF	QSPI0_BA	QSPI0 Control Registers
0x4006_1000 – 0x4006_1FFF	SPI0_BA	SPI0 Control Registers
0x4006_2000 – 0x4006_2FFF	SPI1_BA	SPI1 Control Registers
0x4006_3000 – 0x4006_3FFF	SPI2_BA	SPI2 Control Registers
0x4006_4000 – 0x4006_4FFF	SPI3_BA	SPI3 Control Registers
0x4006_9000 – 0x4006_9FFF	QSPI1_BA	QSPI1 Control Registers
0x4007_0000 – 0x4007_0FFF	UART0_BA	UART0 Control Registers
0x4007_1000 – 0x4007_1FFF	UART1_BA	UART1 Control Registers
0x4007_2000 – 0x4007_2FFF	UART2_BA	UART2 Control Registers
0x4007_3000 – 0x4007_3FFF	UART3_BA	UART3 Control Registers
0x4007_4000 – 0x4007_4FFF	UART4_BA	UART4 Control Registers
0x4007_5000 – 0x4007_5FFF	UART5_BA	UART5 Control Registers
0x4007_6000 – 0x4007_6FFF	UART6_BA	UART6 Control Registers
0x4007_7000 – 0x4007_7FFF	UART7_BA	UART7 Control Registers
0x4008_0000 – 0x4008_0FFF	I^2C0_BA	I^2C0 Control Registers
0x4008_1000 – 0x4008_1FFF	I^2C1_BA	I^2C1 Control Registers
0x4008_2000 – 0x4008_2FFF	I^2C2_BA	I^2C2 Control Registers
0x4009_0000 – 0x4009_0FFF	SC0_BA	Smartcard Host 0 Control Registers

Address Space	Token	Controllers
0x4009_1000 – 0x4009_1FFF	SC1_BA	Smartcard Host 1 Control Registers
0x4009_2000 – 0x4009_2FFF	SC2_BA	Smartcard Host 2 Control Registers
0x4009_3000 – 0x4009_3FFF	SC3_BA	Smartcard Host 3 Control Registers
0x400A_0000 – 0x400A_0FFF	CAN0_BA	CAN0 Bus Control Registers
0x400A_1000 – 0x400A_1FFF	CAN1_BA	CAN1 Bus Control Registers
0x400A_2000 – 0x400A_2FFF	CAN2_BA	CAN2 Bus Control Registers
0x400B_0000 – 0x400B_0FFF	QEI0_BA	QEI0 Control Registers
0x400B_1000 – 0x400B_1FFF	QEI1_BA	QEI1 Control Registers
0x400B_4000 – 0x400B_4FFF	ECAP0_BA	ECAP0 Control Registers
0x400B_5000 – 0x400B_5FFF	ECAP1_BA	ECAP1 Control Registers
0x400B_9000 – 0x400B_9FFF	TRNG_BA	TRNG Control Registers
0x400C_0000 – 0x400C_0FFF	USBD_BA	USB Device Control Register
0x400D_0000 – 0x400D_0FFF	USCI0_BA	USCI0 Control Registers
0x400D_1000 – 0x400D_1FFF	USCI1_BA	USCI1 Control Registers
System Controllers Space (0xE000_E000 ~ 0xE000_EFFF)		
0xE000_E010 – 0xE000_E0FF	SCS_BA	System Timer Control Registers
0xE000_E100 – 0xE000_ECFF	SCS_BA	External Interrupt Controller Control Registers
0xE000_ED00 – 0xE000_ED8F	SCS_BA	System Control Registers

Table 6.2-7 Address Space Assignments for On-Chip Controllers

6.2.7 SRAM Memory Orginization

The M480 series supports embedded SRAM with total 160 Kbytes size and the SRAM organization is separated to three banks: SRAM bank0 and SRAM bank1 and SRAM bank2. The first bank has 32 Kbytes address space, the second bank has 96 Kbyte address space and the third bank has 32Kbyte. These three banks address space can be accessed simultaneously. The SRAM bank0 supports parity error check to make sure chip operating more stable. The SRAM bank2 is shared with SPIM cache, it can switch to external SPI Flash cache memory. Note that SRAM bank2 has additional two wait cycles when reading data.

- Supports total 160 Kbytes SRAM
- Supports byte / half word / word write
- Supports fixed 32 Kbytes SRAM bank0 for independent access
- Supports parity error check function for SRAM bank0
- Supports oversize response error
- Supports remap address to 0x1000_0000

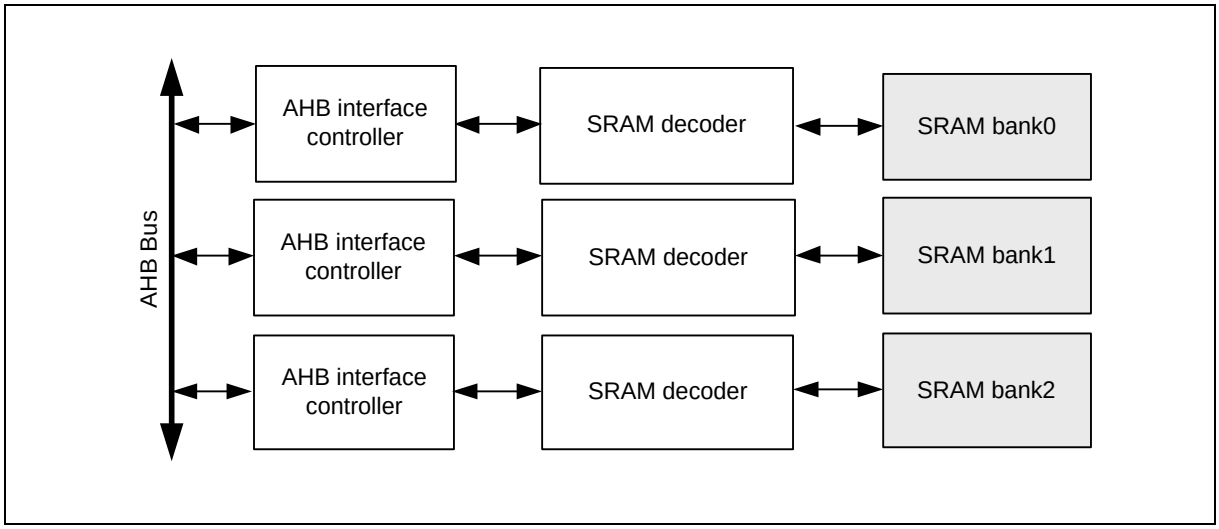

Figure 6.2-9 SRAM Block Diagram

Figure 6.2-10 shows the SRAM organization of M480. There are three SRAM banks in M480. The bank0 is addressed to 32 Kbytes, the bank1 is addressed to 96 Kbytes and the bank2 is addressed to 32 Kbyte. The bank0 address space is from 0x2000_0000 to 0x2000_7FFF. The bank1 address space is from 0x2000_8000 to 0x2001_FFFF. The bank2 address space is from 0x2002_0000 to 0x2002_7FFF. The address between 0x2002_8000 to 0x3FFF_FFFF is illegal memory space and chip will enter hardfault if CPU accesses these illegal memory addresses.

	160 Kbytes Device	**128 Kbytes Device**	**64KB Device**	**Read Access**
SRAM bank0	0x2000_0000 ~ 0x2000_7FFF or 0x1000_0000 ~ 0x1000_7FFF	0x2000_0000 ~ 0x2000_7FFF or 0x1000_0000 ~ 0x1000_7FFF	0x2000_0000 ~ 0x2000_7FFF or 0x1000_0000 ~ 0x1000_7FFF	Zero wait cycle for continuous access
SRAM bank1	0x2000_8000 ~ 0x2001_FFFF or 0x1000_8000 ~ 0x1001_FFFF	0x2000_8000 ~ 0x2001_FFFF or 0x1000_8000 ~ 0x1001_FFFF	0x2000_8000 ~ 0x2000_FFFF or 0x1000_8000 ~ 0x1000_FFFF	Zero wait cycle for continuous access
SRAM bank2	0x2002_0000 ~ 0x2002_7FFF or 0x1002_0000 ~ 0x1002_7FFF			Two wait cycles

Table 6.2-8 SRAM Organization

The address of each bank is remapping from 0x2000_0000 to 0x1000_0000. CPU can access SRAM bank0 through 0x2000_0000 to 0x2000_7FFF or 0x1000_0000 to 0x1000_7FFF, and access SRAM bank1 through 0x2000_8000 to 0x2001_FFFF or 0x1000_8000 to 0x1001_FFFF, and access SRAM bank2 through 0x2002_0000 to 0x2002_7FFF or 0x1002_0000 to 0x1002_7FFF.

When setting the control register CCMEN(SPIM_CTL1[2]) to 0, SRAM bank2 is switched to external SPI Flash cache memory. In this case, the SRAM bank2 can't be accessed as gernal SRAM. If user access SRAM bank2 by AHB bus master, the SPI Flash controller will send error response via HRESP AHB bus signal to bus master.

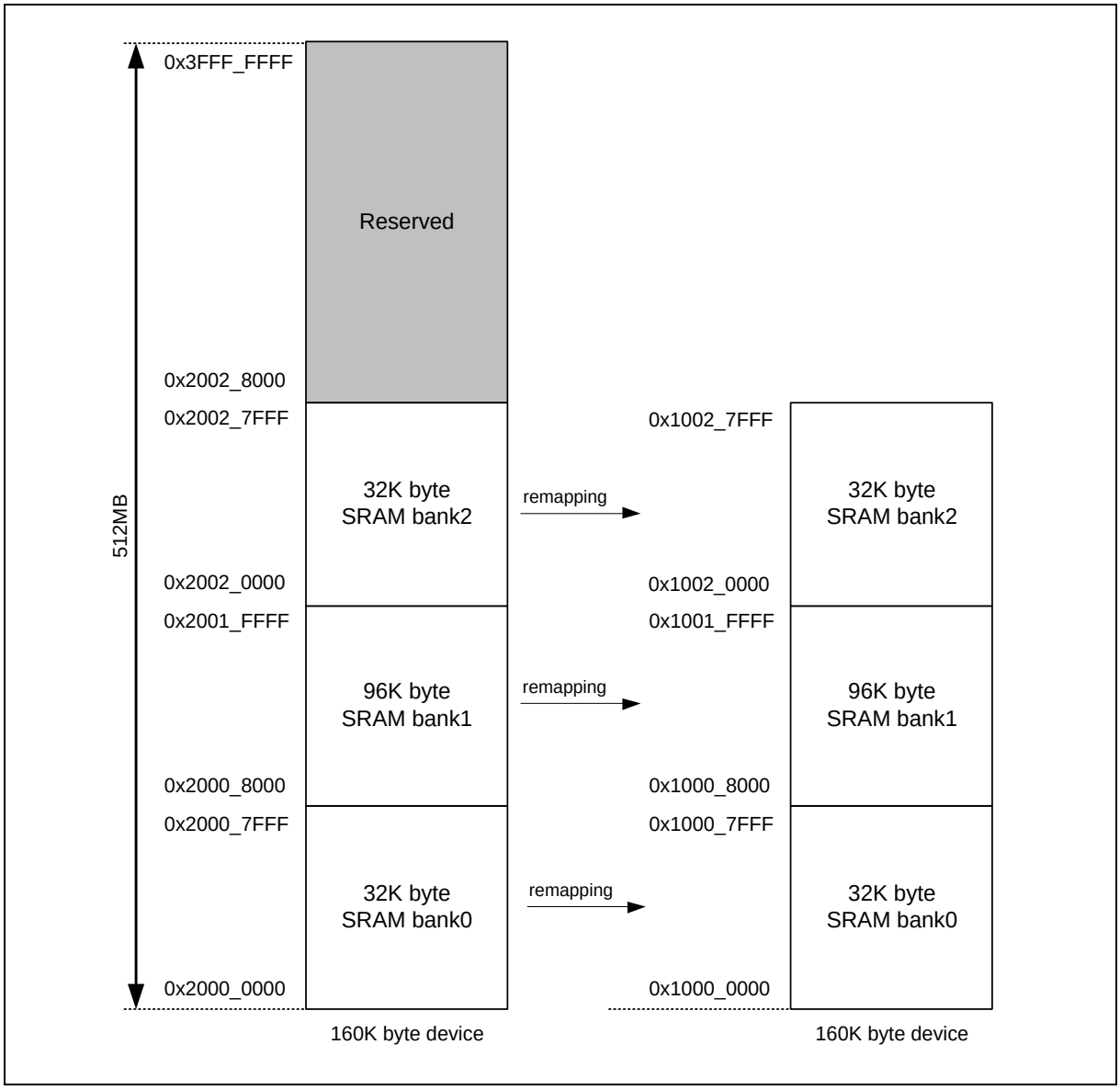

Figure 6.2-10 SRAM Memory Organization

SRAM bank0 has byte parity error check function. When CPU is accessing SRAM bank0, the parity error checking mechanism is dynamic operating. As parity error occured, the PERRIF (SYS_SRAM_STATUS[0]) will be asserted to 1 and the SYS_SRAM_ERRADDR register will recode the address with parity error. Chip will enter interrupt when SRAM parity error occurred if PERRIEN (SYS_SRAM_INTCTL[0]) is set to 1. When SRAM parity error occured, chip will stop detecting SRAM parity error until user writes 1 to clear the PERRIF(SYS_SRAM_STATUS[0]) bit.

6.2.8 Bus Matrix

The M480 supports Bus Matrix to manage the access arbitration between masters. The access arbitration can be selected by INTACTEN (SYS_AHBMCTL[0]) to use round-robin algorithm or set Cortex®-M4 CPU as the highest bus priority.

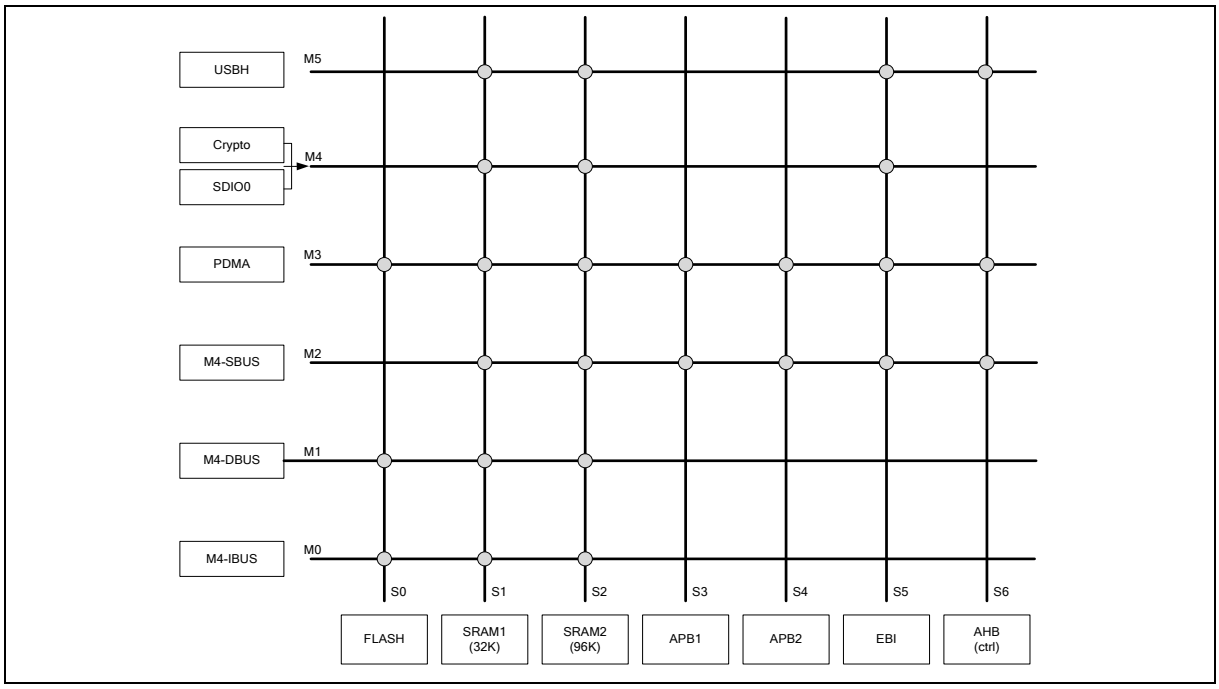

Figure 6.2-11 NuMicro® M480 Bus Matrix Diagram

6.2.9 HIRC Auto Trim

This chip supports auto-trim function: the HIRC trim (12 MHz RC oscillator) and HIRC trim (48 MHz RC oscillator,), according to the accurate LXT (32.768 kHz crystal oscillator) or internal USB synchronous mode, automatically gets accurate HIRC output frequency, 0.25 % deviation within all temperature ranges.

For instance, the system needs an accurate 12 MHz clock. In such case, if neither using use PLL as the system clock source nor soldering 32.768 kHz crystal in system, user has to set REFCKSEL (SYS_IRCTCTL[10] reference clock selection) to “1”, set FREQSEL (SYS_IRCTCTL[1:0] trim frequency selection) to “01”, and the auto-trim function will be enabled. Interrupt status bit FREQLOCK (SYS_IRCTISTS[8] HIRC frequency lock status) “1” indicates the HIRC output frequency is accurate within 0.25% deviation.

In HIRC case, the system needs an accurate 48 MHz clock. In such case, if neither using use PLL as the system clock source nor soldering 32.768 kHz crystal in system, user has to set REFCKSEL (SYS_HIRCTCTL[10] reference clock selection) to “1”, set FREQSEL (SYS_HIRCTCTL[1:0] trim frequency selection) to “10”, and the auto-trim function will be enabled. Interrupt status bit FREQLOCK (SYS_HIRCTSTS[8] HIRC frequency lock status) “1” indicates the HIRC output frequency is accurate within 0.25% deviation.

6.2.10 Register Lock Control

Some of the system control registers need to be protected to avoid inadvertent write and disturb the chip operation. These system control registers are protected after the power-on reset till user to disable register protection. For user to program these protected registers, a register protection disable sequence needs to be followed by a special programming. The register protection disable sequence is writing the data “59h”, “16h” “88h” to the register SYS_REGLCTL address at 0x4000_0100 continuously. Any different data value, different sequence or any other write to other address during these three data writing will abort the whole sequence.

SYS_IPRST0	Address 0x4000_0008
SYS_BODCTL	address 0x4000_0018
SYS_VREFCTL	address 0x4000_0028
SYS_USBPHY	address 0x4000_002C
SYS_SRAM_BISTCTL	address 0x4000_00D0
SYS_PORDISAN	address 0x4000_01EC
SYS_PLCTL	address 0x4000_01F8
CLK_PWRCTL	address 0x4000_0200
CLK_APBCLK0	address 0x4000_0208
CLK_CLKSEL0	address 0x4000_0210
CLK_CLKSEL1	address 0x4000_0214
CLK_PLLCTL	address 0x4000_0240
CLK_PMUCTL	address 0x4000_0290
NMIEN	address 0x4000_0300
AHBMCTL	address 0x4000_0400
FMC_FTCTL	address 0x4000_5018
FMC_ICPCMD	address 0x4000_501C
FMC_ISPCTL	address 0x4000_C000
FMC_ISPTRG	address 0x4000_C010
FMC_ISPSTS	address 0x4000_C040
FMC_CYCCTL	address 0x4000_C04C
FMC_KPKEYTRG	address 0x4000_C05C
FMC_KPKEYSTS	address 0x4000_C060
WDT_CTL	address 0x4004_0000
WDT_ALTCTL	address 0x4004_0004
TIMER0_CTL	address 0x4005_0000
TIMER1_CTL	address 0x4005_0100
TIMER2_CTL	address 0x4005_1000
TIMER3_CTL	address 0x4005_1100
TIMER0_PWMCTL	address 0x4005_0040
TIMER1_PWMCTL	address 0x4005_0140
TIMER2_PWMCTL	address 0x4005_1040

TIMER3_PWMCTL	address 0x4005_1140
TIMER0_PWMDTCTL	address 0x4005_0058
TIMER1_PWMDTCTL	address 0x4005_0158
TIMER2_PWMDTCTL	address 0x4005_1058
TIMER3_PWMDTCTL	address 0x4005_1158
TIMER0_PWMBRKCTL	address 0x4005_0070
TIMER1_PWMBRKCTL	address 0x4005_0170
TIMER2_PWMBRKCTL	address 0x4005_1070
TIMER3_PWMBRKCTL	address 0x4005_1170
TIMER0_PWMSWBRK	address 0x4005_007C
TIMER1_PWMSWBRK	address 0x4005_017C
TIMER2_PWMSWBRK	address 0x4005_107C
TIMER3_PWMSWBRK	address 0x4005_117C
TIMER0_PWMINTEN1	address 0x4005_0084
TIMER1_PWMINTEN1	address 0x4005_0184
TIMER2_PWMINTEN1	address 0x4005_1084
TIMER3_PWMINTEN1	address 0x4005_1184
TIMER0_PWMINTSTS1	address 0x4005_008C
TIMER1_PWMINTSTS1	address 0x4005_018C
TIMER2_PWMINTSTS1	address 0x4005_108C
TIMER3_PWMINTSTS1	address 0x4005_118C
EPWM_CTL0	address 0x4005_8000/0x4005_9000
EPWM_CTL1	address 0x4005_8000/0x4005_9000
EPWM_DTCTL0_1	address 0x4005_8070/0x4005_9070
EPWM_DTCTL2_3	address 0x4005_8074/0x4005_9074
EPWM_DTCTL4_5	address 0x4005_8078/0x4005_9078
EPWM_BRKCTL0_1	address 0x4005_80C8/0x4005_90C8
EPWM_BRKCTL2_3	address 0x4005_80CC/0x4005_90CC
EPWM_BRKCTL4_5	address 0x4005_80D0/0x4005_90D0
EPWM_SWBRK	address 0x4005_80DC/0x4005_90DC
EPWM_INTEN1	address 0x4005_80E4/0x4005_90E4
EPWM_INTSTS1	address 0x4005_80EC/0x4005_90EC
BPWM_CTL0	address 0x4005_A000/0x4005_B000
SYST_VAL	address 0xE000_E018

6.2.11 System Timer (SysTick)

The Cortex®-M4 includes an integrated system timer, SysTick, which provides a simple, 24-bit clear-on-write, decrementing, wrap-on-zero counter with a flexible control mechanism. The counter can be used as a Real Time Operating System (RTOS) tick timer or as a simple counter.

When system timer is enabled, it will count down from the value in the SysTick Current Value Register (SYST_VAL) to zero, and reload (wrap) to the value in the SysTick Reload Value Register (SYST_LOAD) on the next clock cycle, and then decrement on subsequent clocks. When the counter transitions to zero, the COUNTFLAG status bit is set. The COUNTFLAG bit clears on reads.

The SYST_VAL value is UNKNOWN on reset. Software should write to the register to clear it to zero before enabling the feature. This ensures the timer will count from the SYST_LOAD value rather than an arbitrary value when it is enabled.

If the SYST_LOAD is zero, the timer will be maintained with a current value of zero after it is reloaded with this value. This mechanism can be used to disable the feature independently from the timer enable bit.

For more detailed information, please refer to the "*Arm® Cortex®-M4 Technical Reference Manual*" and "*Arm® v6-M Architecture Reference Manual*".

6.2.12 Nested Vectored Interrupt Controller (NVIC)

The NVIC and the processor core interface are closely coupled to enable low latency interrupt processing and efficient processing of late arriving interrupts. The NVIC maintains knowledge of the stacked, or nested, interrupts to enable tail-chaining of interrupts. You can only fully access the NVIC from privileged mode, but you can cause interrupts to enter a pending state in user mode if you enable the Configuration and Control Register. Any other user mode access causes a bus fault. You can access all NVIC registers using byte, halfword, and word accesses unless otherwise stated. NVIC registers are located within the SCS (System Control Space). All NVIC registers and system debug registers are little-endian regardless of the endianness state of the processor.

The NVIC supports:

- An implementation-defined number of interrupts, in the range 1-240 interrupts.
- A programmable priority level of 0-16 for each interrupt; a higher level corresponds to a lower priority, so level 0 is the highest interrupt priority.
- Level and pulse detection of interrupt signals.
- Dynamic reprioritization of interrupts.
- Grouping of priority values into group priority and subpriority fields.
- Interrupt tail-chaining.
- An external Non Maskable Interrupt (NMI)
- WIC with Ultra-low Power Sleep mode support

The processor automatically stacks its state on exception entry and unstacks this state on exception exit, with no instruction overhead. This provides low latency exception handling.

6.3 Clock Controller

6.3.1 Overview

The clock controller generates clocks for the whole chip, including system clocks and all peripheral clocks. The clock controller also implements the power control function with the individually clock ON/OFF control, clock source selection and a clock divider. The chip will not enter Power-down mode until CPU sets the Power-down enable bit PDEN(CLK_PWRCTL[7]) and Cortex®-M4F core executes the WFI instruction. After that, chip enters Power-down mode and wait for wake-up interrupt source triggered to leave Power-down mode. In Power-down mode, the clock controller turns off the 4~24 MHz external high speed crystal (HXT) and 12 MHz internal high speed RC oscillator (HIRC) to reduce the overall system power consumption. Figure 6.3-1 shows the clock generator and the overview of the clock source control.

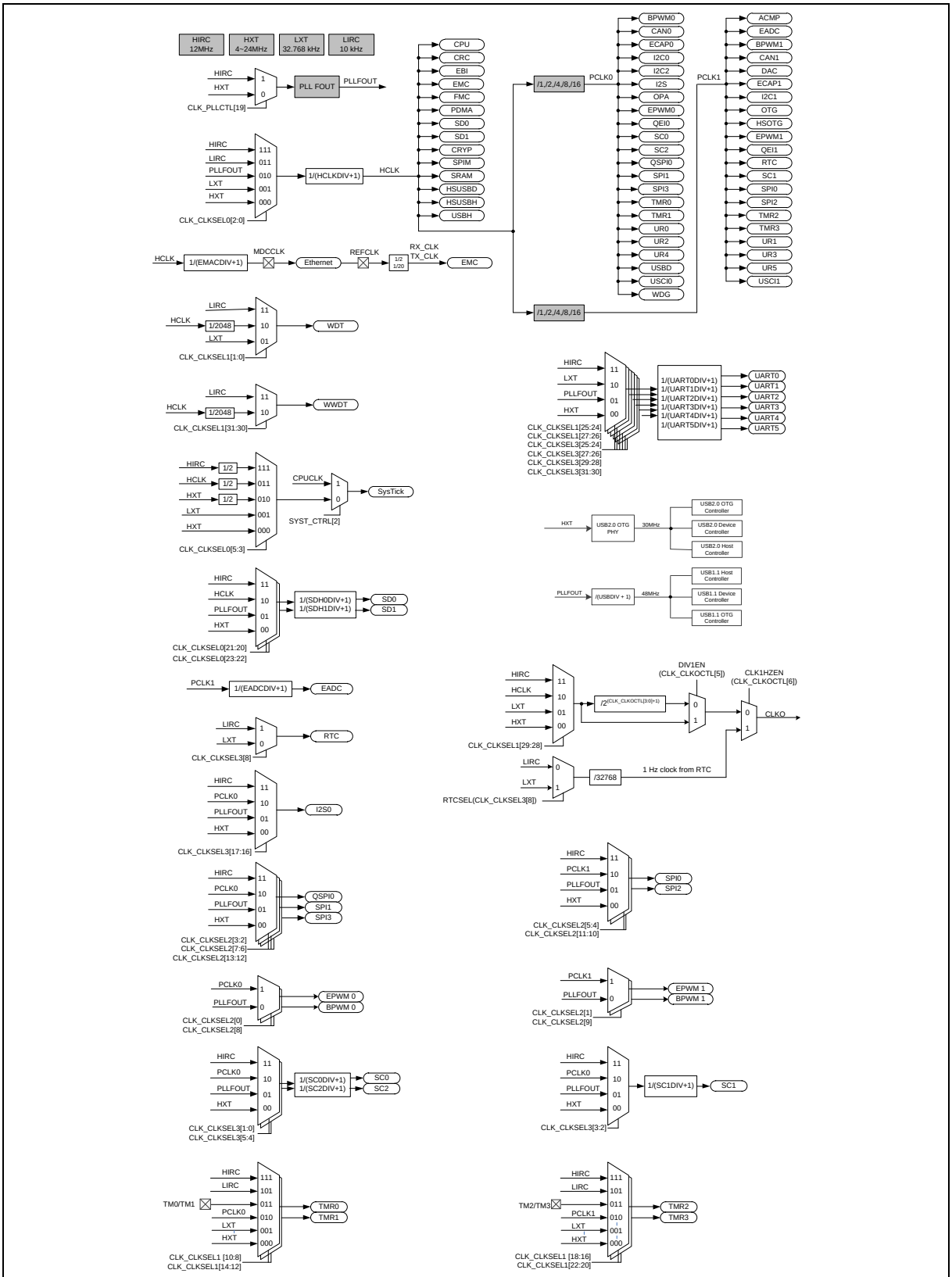

Note: For USB High-speed application, HXT should be 12 MHz.

Figure 6.3-1 Clock Generator Global View Diagram (M48xID/M487KMCAN)

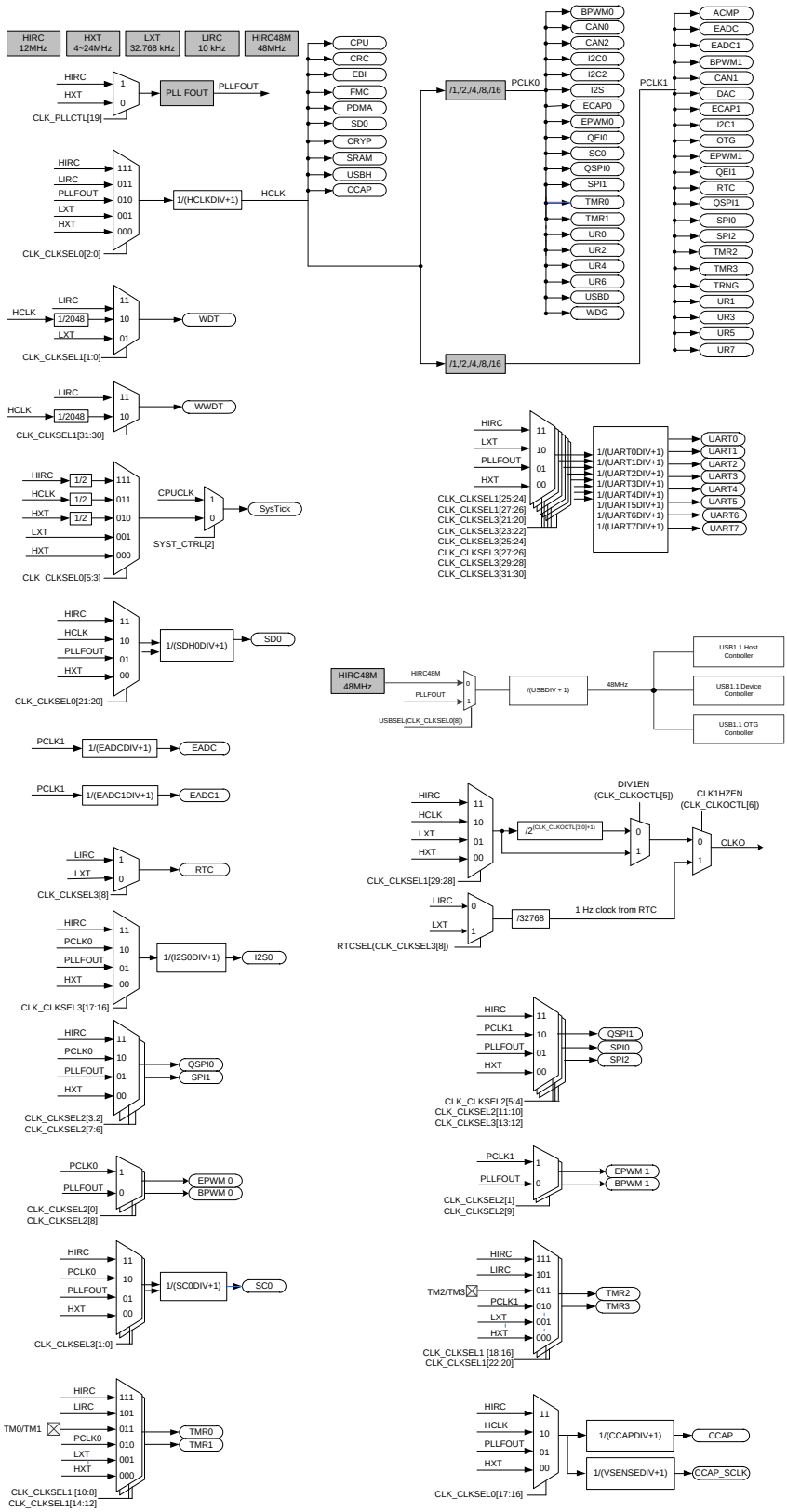

Note: If HCLK clock source frequency is PLL, HCLKDIV setting should not be '1'. HCLK should not be equal to PLL/2.

Figure 6.3-2 Clock Generator Global View Diagram (M48xGC/M48xE8)

6.3.2 Clock Generator

The clock generator consists of 5 clock sources, which are listed below:

- 32.768 kHz external low speed crystal oscillator (LXT)
- 4~24 MHz external high speed crystal oscillator (HXT)
- Programmable PLL output clock frequency (PLLFOUT), PLL source can be selected from external 4~24 MHz external high speed crystal (HXT) or 12 MHz internal high speed oscillator (HIRC)
- 12 MHz internal high speed RC oscillator (HIRC)
- 10 kHz internal low speed RC oscillator (LIRC)

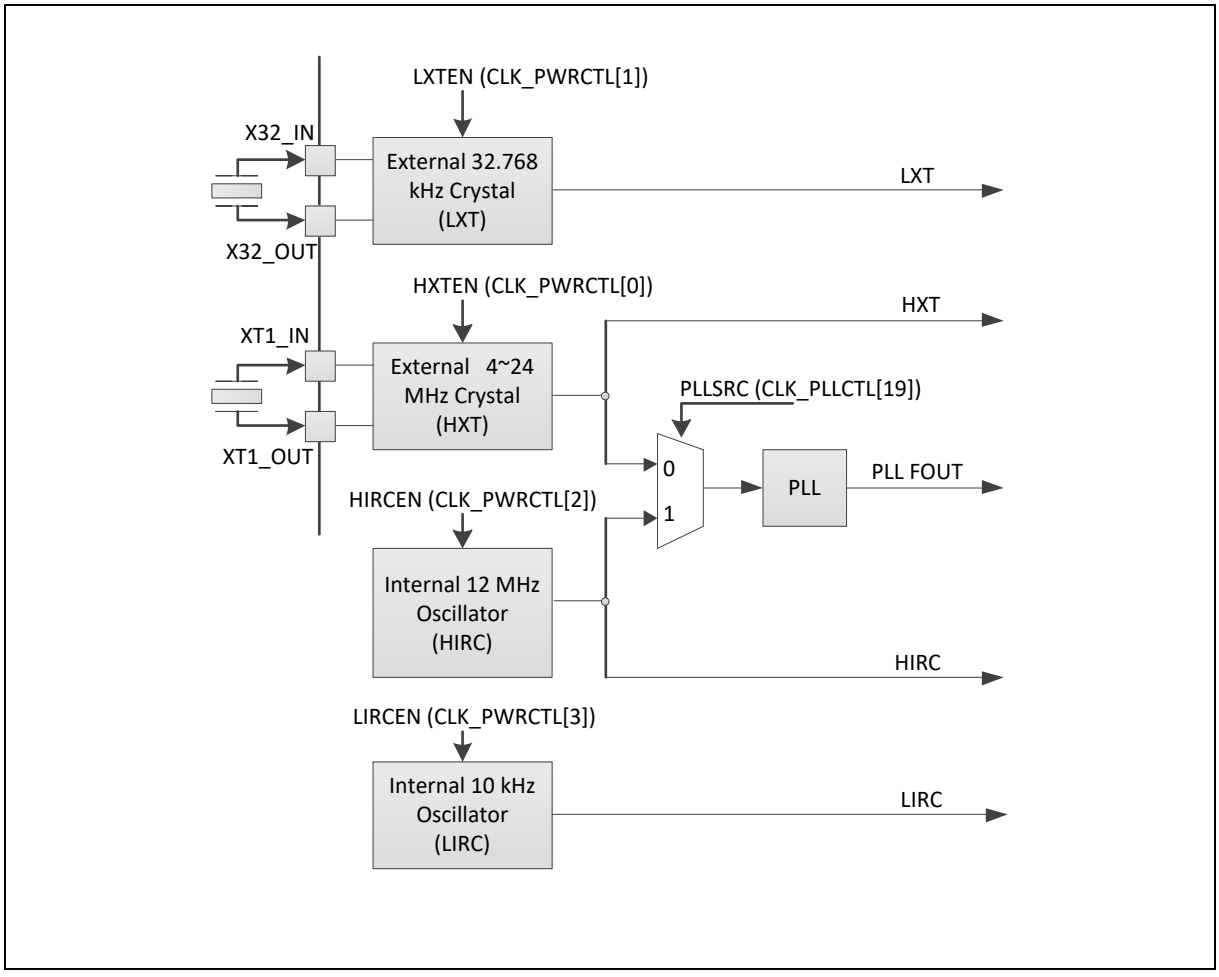

Figure 6.3-3 Clock Generator Block Diagram

6.3.3 System Clock and SysTick Clock

The system clock has 5 clock sources, which were generated from clock generator block. The clock source switch depends on the register HCLKSEL (CLK_CLKSEL0[2:0]). The block diagram is shown in Figure 6.3-4.

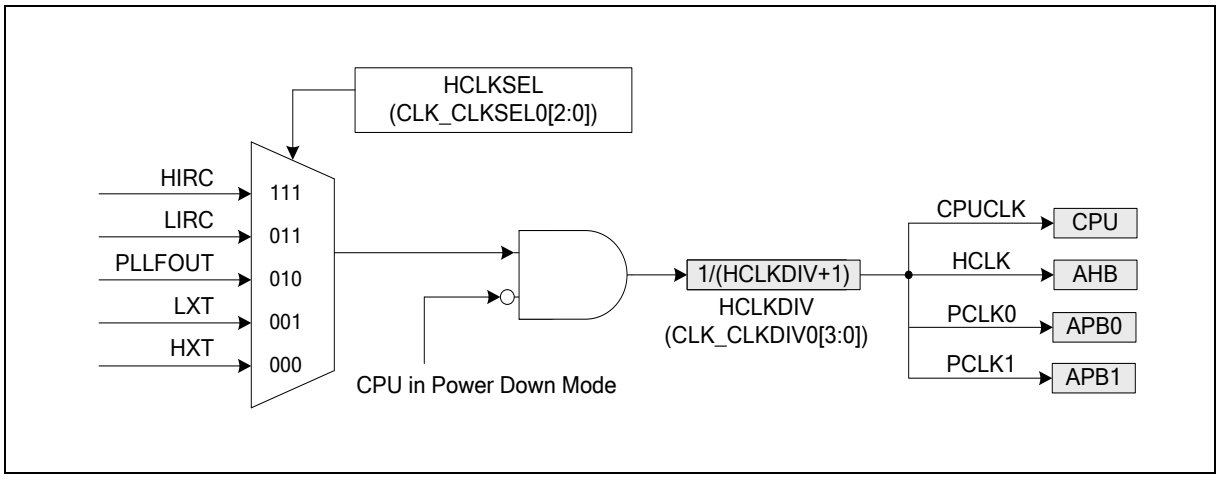

Figure 6.3-4 System Clock Block Diagrams

There are two clock fail detectors to observe HXT and LXT clock source and they have individual enable and interrupt control. When HXT detector is enabled, the HIRC clock is enabled automatically. When LXT detector is enabled, the LIRC clock is enabled automatically.

When HXT clock detector is enabled, the system clock will auto switch to HIRC if HXT clock stop being detected on the following condition: system clock source comes from HXT or system clock source comes from PLL with HXT as the input of PLL. If HXT clock stop condition is detected, the HXTFIF (CLK_CLKDSTS[0]) is set to 1 and chip will enter interrupt if HXTFIE (CLK_CLKDCTL[5]) is set to 1. User can trying to recover HXT by disable HXT and enable HXT again to check if the clock stable bit is set to 1 or not. If HXT clock stable bit is set to 1, it means HXT is recover to oscillate after re-enable action and user can switch system clock to HXT again.

Figure 6.3-5 shows The HXT clock stops detection and system clock switches to HIRC procedure

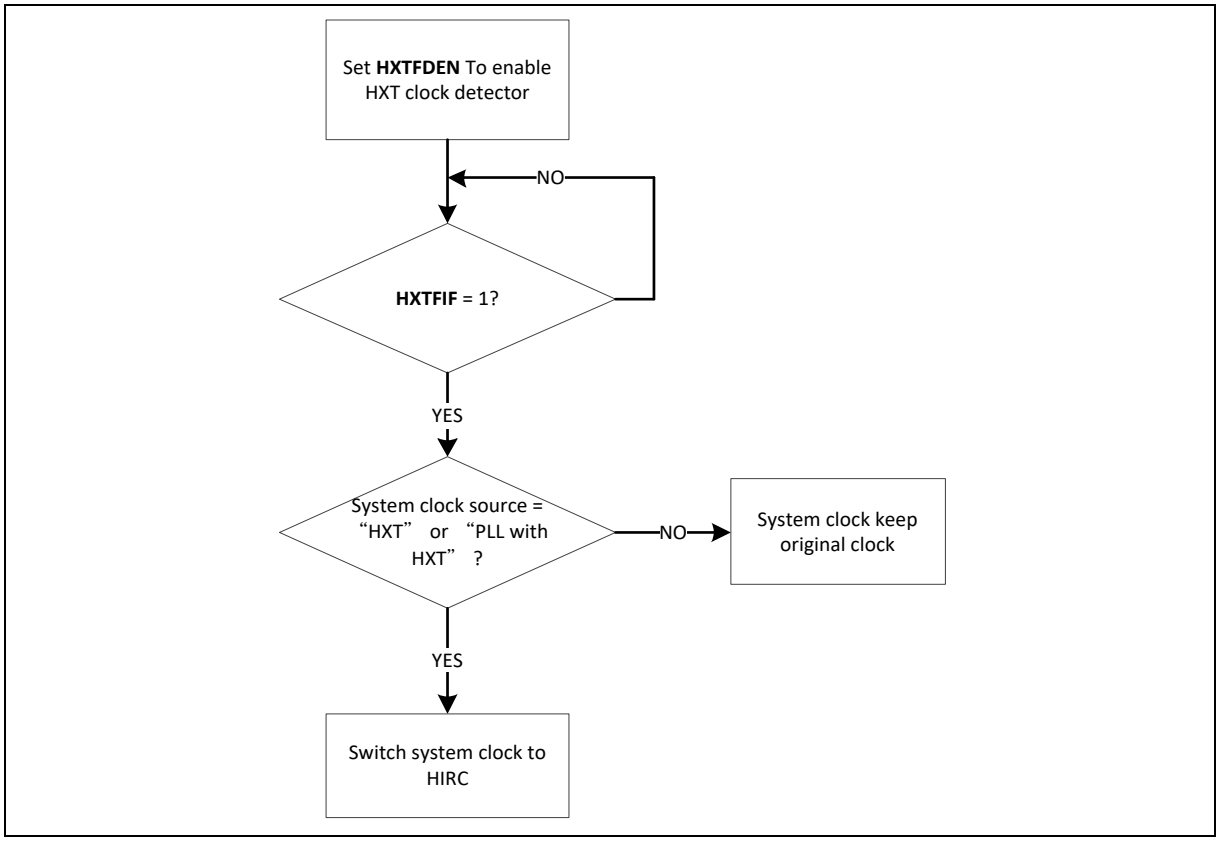

Figure 6.3-5 HXT Stop Protect Procedure

The clock source of SysTick in Cortex®-M4F core can use CPU clock or external clock (SYST_CTRL[2]). If using external clock, the SysTick clock (STCLK) has 5 clock sources. The clock source switch depends on the setting of the register STCLKSEL (CLK_CLKSEL0[5:3]). The block diagram is shown in Figure 6.3-6.

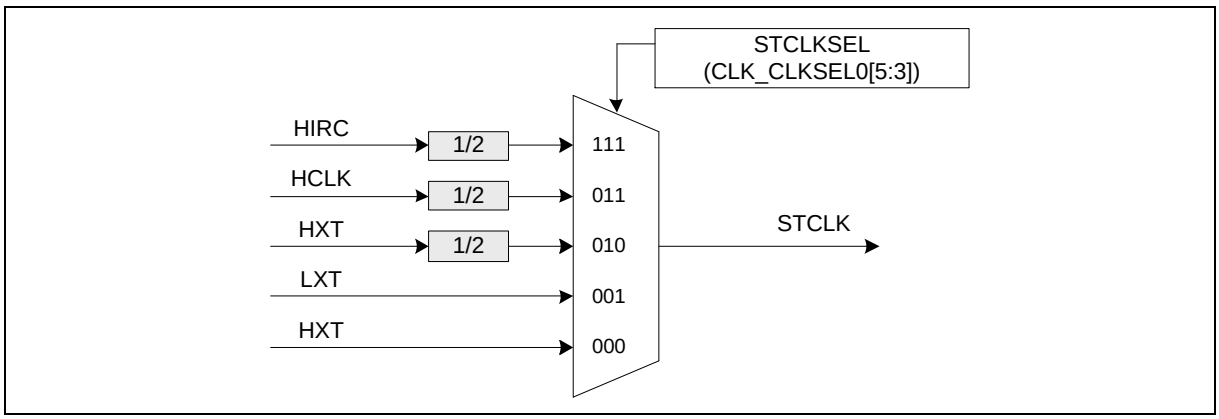

Figure 6.3-6 SysTick Clock Control Block Diagram

6.3.4 Peripherals Clock

Each peripheral clock has its own clock source selection. Refer to the CLK_CLKSEL1, CLK_CLKSEL2 and CLK_CLKSEL3 register.

6.3.5 Power-down Mode Clock

When entering Power-down mode, system clocks, some clock sources and some peripheral clocks are disabled. Some clock sources and peripherals clock are still active in Power-down mode.

For theses clocks, which still keep active, are listed below:

- Clock Generator
  - 10 kHz internal low speed RC oscillator (LIRC) clock
  - 32.768 kHz external low speed crystal oscillator (LXT) clock
- Peripherals Clock (When the modules adopt LXT or LIRC as clock source)

6.3.6 Clock Output

This device is equipped with a power-of-2 frequency divider which is composed of 16 chained divide-by-2 shift registers. One of the 16 shift register outputs selected by a sixteen to one multiplexer is reflected to CLKO function pin. Therefore there are 16 options of power-of-2 divided clocks with the frequency from $F_{in}/2^1$ to $F_{in}/2^{16}$ where F_{in} is input clock frequency to the clock divider.

The output formula is $\mathbf{F_{out} = F_{in}/2^{(N+1)}}$, where F_{in} is the input clock frequency, F_{out} is the clock divider output frequency and N is the 4-bit value in FREQSEL (CLK_CLKOCTL[3:0]).

When writing 1 to CLKOEN (CLK_CLKOCTL[4]), the chained counter starts to count. When writing 0 to CLKOEN (CLK_CLKOCTL[4]), the chained counter continuously runs till divided clock reaches low state and stays in low state.

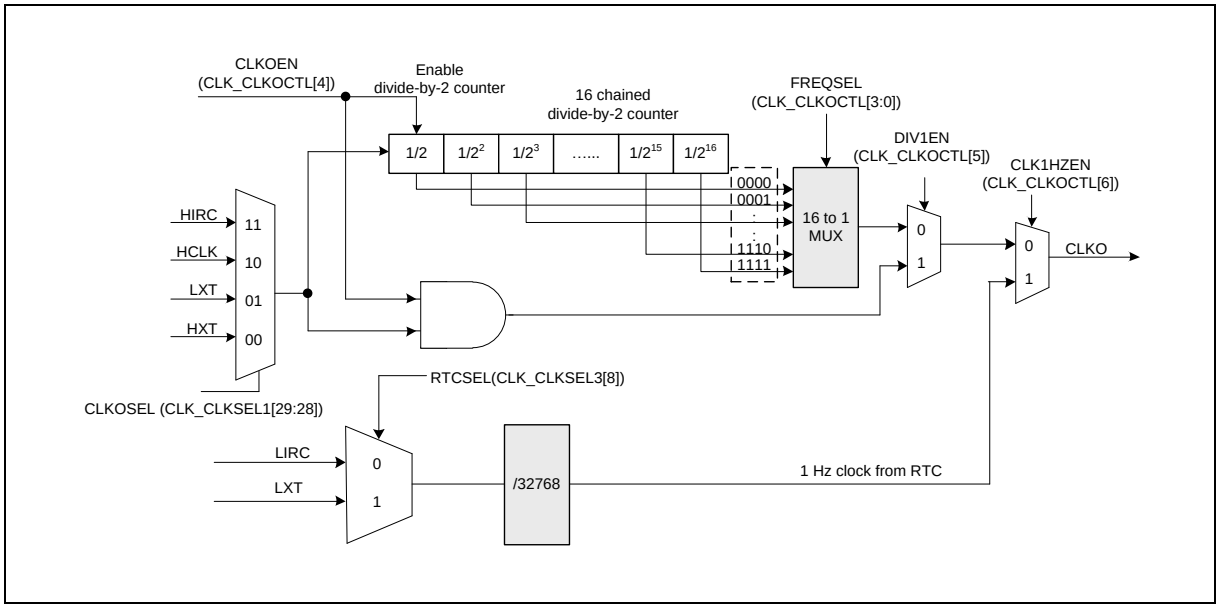

Figure 6.3-7 Clock Output Block Diagram

6.3.7 USB Clock Source

The clock sources of USB 1.0 and 2.0 systems are generated from external crystal clock 12MHz or programmable PLL output. M48xGC/M48xE8 has a HIRC48M for USB 1.0 system. The generated clocks are shown in Figure 6.3-8 and Figure 6.3-9.

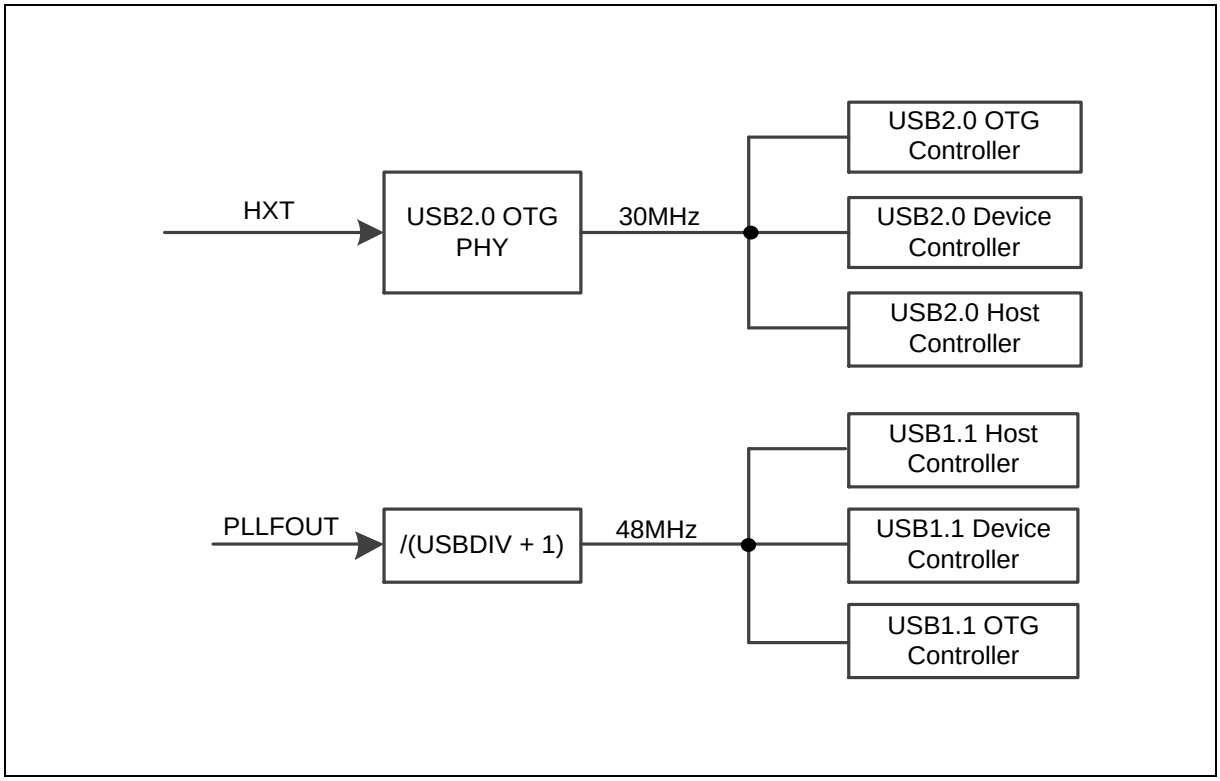

Figure 6.3-8 USB Clock Source (M48xID/M487KMCAN)

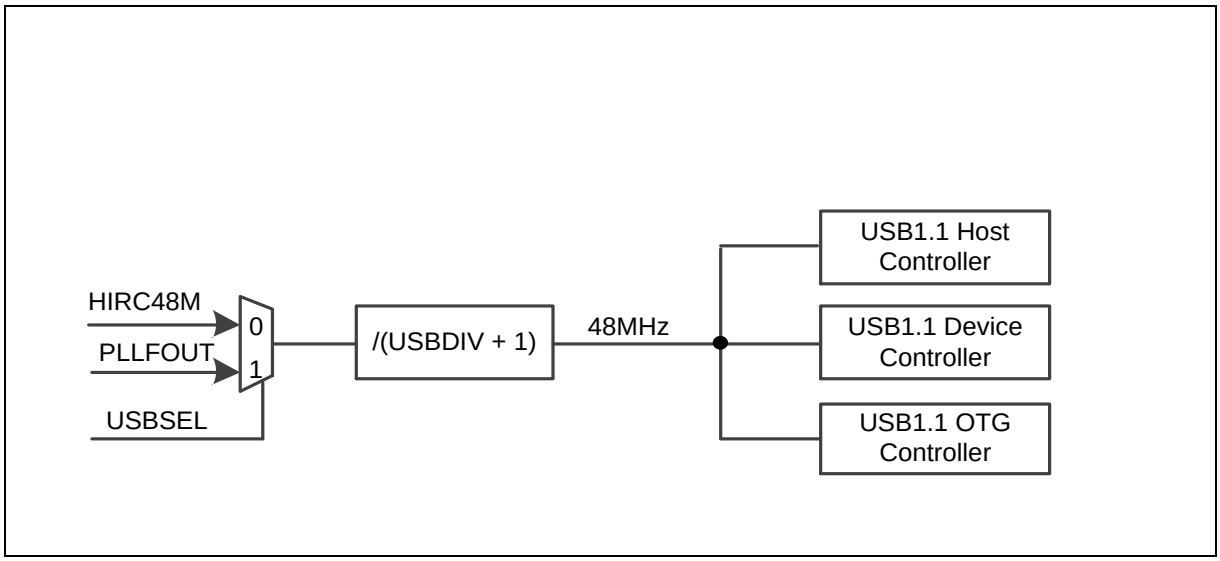

Figure 6.3-9 USB Clock Source (M48xGC/M48xE8)

6.4 True Random Number Generator (TRNG)

6.4.1 Overview

The True Random Number Generator (TRNG) is used to generate the randomness by extracting from physical phenomena.

6.4.2 Features

- Generates 800 random bits per second

6.5 Flash Memeory Controller (FMC)

6.5.1 Overview

The FMC is equipped with 128/256/512 Kbytes on-chip embedded Flash for application and configurable Data Flash to store some application dependent data. Thus, the total size of application rom (APROM) is 128/256/512 Kbytes. A User Configuration block provides for system initiation. A 4 Kbytes loader ROM (LDROM) is used for In-System-Programming (ISP) function. A 4 Kbytes security protection ROM (SPROM) can conceal user program. A 3 Kbytes one-time-program ROM (OTP) is used for recording one-time-program data. A 8 Kbytes Boot Loader consists of secure boot function. A 4 Kbytes cache with zero wait cycle is used to improve Flash access performance. This chip also supports In-Application-Programming (IAP) function. User switches the code executing without chip reset after the embedded Flash is updated.

6.5.2 Features

- Supports dual-bank Flash macro for safe firmware upgrade
- Supports 128/256 Kbytes application ROM (APROM)
- Supports 512 Kbytes application ROM (APROM)
- Supports 4 Kbytes loader ROM (LDROM)
- Supports 4 Kbytes security protection ROM (SPROM) to conceal user program
- Supports mirror SPROM in dual-bank Flash macro to read SPROM code while writing other ROM
- Supports 4 XOM (eXecution Only Memory) regions to conceal user program in APROM.
- Supports Data Flash with configurable memory size
- Supports 16 bytes User Configuration block to control system initiation
- Supports 3 Kbytes one-time-program ROM (OTP)
- Supports 4 Kbytes page erase for all embedded Flash
- Supports block and bank erase for APROM, except for XOM regions
- Supports Secure Boot function for code integrity and authenticity
- Supports Security Key protection function for APROM, LDROM, SPROM, User Configuration block and KPROM protection
- Supports 32-bit/64-bit and multi-word Flash programming function
- Supports fast Flash programming verification function
- Supports CRC32 checksum calculation function
- Supports Flash all one verification function
- Supports In-System-Programming (ISP) / In-Application-Programming (IAP) to update embedded Flash memory
- Supports cache memory to improve Flash access performance and reduce power consumption

FMC Features	M48xID/M487KMCAN	M48xGC/M48xE8
Dual-bank Flash macro	●	

128/256 Kbytes APROM	●	●
512 Kbytes APROM	●	
4 Kbytes LDROM	●	●
4 Kbytes SPROM	●	
4 XOM region		●
Data Flash with configurable memory size	●	●
16 bytes User Configuration block (UCFG)	●	●
3 Kbytes OTP	●	●
8 Kbytes KPROM	●	●
4 Kbytes page erase	●	●
Block and bank erase for APROM, except for XOM	●	●
8 Kbytes Boot Loader with native ISP functions		●
ECC secure boot function		●
Security Key protection function for APROM and LDROM	●	●
Security Key protection function for UCFG and KPROM	●	●
Security Key protection function for SPROM	●	
32-bit/64-bit and multi-word Flash programming function	●	●
Fast Flash programming verification function	●	●
CRC32 checksum calculation function	●	●
4 Kbytes cache memory	●	●
In-Application-Programming function (IAP)	●	●
Boot from boot loader via PF.0 at reset rising	●	

Table 6.5-1 FMC Features Comparison Table at Different Chip

6.6 General Purpose I/O (GPIO)

6.6.1 Overview

This chip has up to 118 General Purpose I/O pins to be shared with other function pins depending on the chip configuration. These 118 pins are arranged in 8 ports named as PA, PB, PC, PD, PE, PF, PG and PH. PA, PB, PE and PG has 16 pins on port. PC, PD has 15 pins on port. PF, PH has 12 pins on port. Each of the 118 pins is independent and has the corresponding register bits to control the pin mode function and data.

The I/O type of each of I/O pins can be configured by software individually as Input, Push-pull output, Open-drain output or Quasi-bidirectional mode. After the chip is reset, the I/O mode of all pins are depending on CIOINI (CONFIG0[10]).

6.6.2 Features

- Four I/O modes:
  - Quasi-bidirectional mode
  - Push-Pull Output mode
  - Open-Drain Output mode
  - Input only with high impendence mode
- TTL/Schmitt trigger input selectable
- I/O pin can be configured as interrupt source with edge/level setting
- Supports High Drive and High Slew Rate I/O mode
- Configurable default I/O mode of all pins after reset by CIOINI (CONFIG0[10]) setting
  - CIOINI = 0, all GPIO pins in Quasi-bidirectional mode after chip reset
  - CIOINI = 1, all GPIO pins in input mode after chip reset
- Supports independent pull-up and pull-down control
- Enabling the pin interrupt function will also enable the wake-up function

6.7 PDMA Controller (PDMA)

6.7.1 Overview

The peripheral direct memory access (PDMA) controller is used to provide high-speed data transfer. The PDMA controller can transfer data from one address to another without CPU intervention. This has the benefit of reducing the workload of CPU and keeps CPU resources free for other applications. The PDMA controller has a total of 16 channels and each channel can perform transfer between memory and peripherals or between memory and memory.

6.7.2 Features

- Supports 16 independently configurable channels
- Selectable 2 level of priority (fixed priority or round-robin priority)
- Supports transfer data width of 8, 16, and 32 bits
- Supports source and destination address increment size can be byte, half-word, word or no increment
- Supports software and SPI, UART, DAC, ADC and PWM request
- Supports Scatter-Gather mode to perform sophisticated transfer through the use of the descriptor link list table
- Supports single and burst transfer type
- Supports time-out function on channel 0 and channel1
- Supports stride function from channel 0 to channel 5
- Enhanced Stride Function for image processing (M48xGC/M48xE8)

6.8 Timer Controller (TMR)

6.8.1 Overview

The timer controller includes four 32-bit timers, Timer0 ~ Timer3, allowing user to easily implement a timer control for applications. The timer can perform functions, such as frequency measurement, delay timing, clock generation, and event counting by external input pins, and interval measurement by external capture pins.

The timer controller also provides four PWM generators. Each PWM generator supports two PWM output channels in independent mode and complementary mode. The output state of PWM output pin can be control by pin mask, polarity and break control, and dead-time generator.

6.8.2 Features

6.8.2.1 Timer Function Features

- Four sets of 32-bit timers, each timer having one 24-bit up counter and one 8-bit prescale counter
- Independent clock source for each timer
- Provides one-shot, periodic, toggle-output and continuous counting operation modes
- 24-bit up counter value is readable through CNT (TIMERx_CNT[23:0])
- Supports event counting function
- 24-bit capture value is readable through CAPDAT (TIMERx_CAP[23:0])
- Supports external capture pin event for interval measurement
- Supports external capture pin event to reset 24-bit up counter
- Supports chip wake-up from Idle/Power-down mode if a timer interrupt signal is generated
- Support Timer0 ~ Timer3 time-out interrupt signal or capture interrupt signal to trigger EPWM, BPWM, QEI, EADC, DAC and PDMA function
- Supports internal capture triggered while internal ACMP output signal transition
- Supports internal clock (HIRC, LIRC) and external clock (HXT, LXT) for capture event
- Supports Inter-Timer trigger mode
- Supports event counting source from internal USB SOF signal

6.8.2.2 PWM Function Features

- Supports maximum clock frequency up to maximum PCLK
- Supports independent mode for PWM generator with two output channels
- Supports complementary mode for PWM generator with paired PWM output channel
  - 12-bit dead-time insertion with 12-bit prescale
- Supports 12-bit prescale from 1 to 4096
- Supports 16-bit PWM counter
  - Up, down and up-down count operation type
  - One-shot or auto-reload counter operation mode
- Supports mask function and tri-state enable for each PWM output pin
- Supports brake function
  - Brake source from pin, analog comparator and system safety events (clock failed, Brown-out detection, SRAM parity error and CPU lockup)
  - Brake pin noise filter control for brake source
  - Edge detect brake source to control brake state until brake status cleared
  - Level detect brake source to auto recover function after brake condition removed
- Supports interrupt on the following events:
  - PWM zero point, period point, up-count compared or down-count compared point events
  - Brake condition happened
- Supports trigger EADC on the following events:
  - PWM zero point, period, zero or period point, up-count compared or down-count compared point events

6.9 Watchdog Timer (WDT)

6.9.1 Overview

The Watchdog Timer (WDT) is used to perform a system reset when system runs into an unknown state. This prevents system from hanging for an infinite period of time. Besides, this Watchdog Timer supports the function to wake up system from Idle/Power-down mode.

6.9.2 Features

- 18-bit free running up counter for WDT time-out interval
- Selectable time-out interval (2^4 ~ 2^{18}) and the time-out interval is 1.6 ms ~ 26.214 s if WDT_CLK = 10 kHz.
- System kept in reset state for a period of (1 / WDT_CLK) * 63
- Supports selectable WDT reset delay period, including 1026、130、18 or 3 WDT_CLK reset delay period
- Supports to force WDT enabled after chip powered on or reset by setting CWDTEN[2:0] in Config0 register
- Supports WDT time-out wake-up function only if WDT clock source is selected as 10 kHz or LXT.

6.10 Window Watchdog Timer (WWDT)

6.10.1 Overview

The Window Watchdog Timer (WWDT) is used to perform a system reset within a specified window period to prevent software running to uncontrollable status by any unpredictable condition.

6.10.2 Features

- 6-bit down counter value (CNTDAT, WWDT_CNT[5:0]) and 6-bit compare value (CMPDAT, WWDT_CTL[21:16]) to make the WWDT time-out window period flexible
- Supports 4-bit value (PSCSEL, WWDT_CTL[11:8]) to programmable maximum 11-bit prescale counter period of WWDT counter
- WWDT counter suspends in Idle/Power-down mode

6.11 Real Time Clock (RTC)

6.11.1 Overview

The Real Time Clock (RTC) controller provides the real time and calendar message. The RTC offers programmable time tick and alarm match interrupts. The data format of time and calendar messages are expressed in BCD format. A digital frequency compensation feature is available to compensate external crystal oscillator frequency accuracy.

6.11.2 Features

- Supports independent RTC power domain with external power pin V_{BAT}. (M48xGC/M48xE8)
- Supports real time counter in RTC_TIME (hour, minute, second) and calendar counter in RTC_CAL (year, month, day) for RTC time and calendar check.
- Supports alarm time (hour, minute, second) and calendar (year, month, day) settings in RTC_TALM and RTC_CALM.
- Supports alarm time (hour, minute, second) and calendar (year, month, day) mask enable in RTC_TAMSK and RTC_CAMSK.
- Selectable 12-hour or 24-hour time scale in RTC_CLKFMT register.
- Optional support 1/128 second HZCNT in RTC_TIME and RTC_TALM.
- Supports Leap Year indication in RTC_LEAPYEAR register.
- Supports Day of the Week counter in RTC_WEEKDAY register.
- Frequency of RTC clock source compensate by RTC_FREQADJ register.
- All time and calendar message expressed in BCD format.
- Supports periodic RTC Time Tick interrupt with 8 period interval options 1/128, 1/64, 1/32, 1/16, 1/8, 1/4, 1/2 and 1 second.
- Supports RTC Time Tick and Alarm Match interrupt.
- Supports chip wake-up from Idle or Power-down mode while a RTC interrupt signal is generated.
- Supports Daylight Saving Time software control in RTC_DSTCTL.
- Supports up to 6 individual tamper pins.
- Supports 20/80 bytes spare registers and tamper pins detection to clear the content of these spare registers.
- Supports Flash mass erase operate will also clear the 20 bytes spare registers content. (M48xGC/M48xE8)

6.12 EPWM Generator and Capture Timer (EPWM)

6.12.1 Overview

The chip provides two EPWM generators — EPWM0 and EPWM1. Each EPWM supports 6 channels of EPWM output or input capture. There is a 12-bit prescaler to support flexible clock to the 16-bit EPWM counter with 16-bit comparator. The EPWM counter supports up, down and up-down counter types. EPWM uses comparator compared with counter to generate events. These events use to generate EPWM pulse, interrupt and trigger signal for EADC/DAC to start conversion.

The EPWM generator supports two standard EPWM output modes: Independent mode and Complementary mode, they have difference architecture. There are two output functions based on standard output modes: Group function and Synchronous function. Group function can be enabled under Independent mode or complementary mode. Synchronous function only enabled under complementary mode. Complementary mode has two comparators to generate various EPWM pulse with 12-bit dead-time generator and another free trigger comparator to generate trigger signal for EADC. For EPWM output control unit, it supports polarity output, independent pin mask and brake functions.

The EPWM generator also supports input capture function. It supports latch EPWM counter value to corresponding register when input channel has a rising transition, falling transition or both transition is happened. Capture function also support PDMA to transfer captured data to memory.

6.12.2 Features

6.12.2.1 EPWM Function Features

- Supports maximum clock frequency up to 192MHz
- Supports up to two EPWM modules, each module provides 6 output channels
- Supports independent mode for EPWM output/Capture input channel
- Supports complementary mode for 3 complementary paired EPWM output channel
  - Dead-time insertion with 12-bit resolution
  - Synchronous function for phase control
  - Two compared values during one period
- Supports 12-bit prescaler from 1 to 4096
- Supports 16-bit resolution EPWM counter
  - Up, down and up/down counter operation type
- Supports one-shot or auto-reload counter operation mode
- Supports group function
- Supports synchronous function
- Supports mask function and tri-state enable for each EPWM pin
- Supports brake function
  - Brake source from pin, analog comparator and system safety events (clock failed, SRAM parity error, Brown-out detection and CPU lockup).
  - Noise filter for brake source from pin
  - Leading edge blanking (LEB) function for brake source from analog comparator
  - Edge detect brake source to control brake state until brake interrupt cleared
  - Level detect brake source to auto recover function after brake condition removed

- Supports interrupt on the following events:
  - EPWM counter matches 0, period value or compared value
  - Brake condition happened
- Supports trigger EADC/DAC on the following events:
  - EPWM counter matches 0, period value or compared value
  - EPWM counter matches free trigger comparator compared value (only for EADC)
  - Supports EPWM trigger EADC event prescaler feature
- Supports EPWM output accumulator stop counter mode (M48xGC/M48xE8)
- Supports Fault Detect function (M48xGC/M48xE8)

6.12.2.2 Capture Function Features

- Supports up to 12 capture input channels with 16-bit resolution
- Supports rising or falling capture condition
- Supports input rising/falling capture interrupt
- Supports rising/falling capture with counter reload option
- Supports PDMA transfer function for EPWM all channels

6.13 Basic PWM Generator and Capture Timer (BPWM)

6.13.1 Overview

The chip provides two BPWM generators — BPWM0 and BPWM1. Each BPWM supports 6 channels of BPWM output or input capture. There is a 12-bit prescaler to support flexible clock to the 16-bit BPWM counter with 16-bit comparator. The BPWM counter supports up, down and up-down counter types, all 6 channels share one counter. BPWM uses the comparator compared with counter to generate events. These events are used to generate BPWM pulse, interrupt and trigger signal for EADC0/1 to start conversion. For BPWM output control unit, it supports polarity output, independent pin mask and tri-state output enable.

The BPWM generator also supports input capture function to latch BPWM counter value to corresponding register when input channel has a rising transition, falling transition or both transition is happened.

6.13.2 Features

6.13.2.1 BPWM Function Features

- Supports maximum clock frequency up to 192MHz.
- Supports up to two BPWM modules; each module provides 6 output channels
- Supports independent mode for BPWM output/Capture input channel
- Supports 12-bit prescalar from 1 to 4096
- Supports 16-bit resolution BPWM counter; each module provides 1 BPWM counter
  - Up, down and up/down counter operation type
- Supports mask function and tri-state enable for each BPWM pin
- Supports interrupt in the following events:
  - BPWM counter matches 0, period value or compared value
- Supports trigger EADC0/1 in the following events:
  - BPWM counter matches 0, period value or compared value

6.13.2.2 Capture Function Features

- Supports up to 12 capture input channels with 16-bit resolution
- Supports rising or falling capture condition
- Supports input rising/falling capture interrupt
- Supports rising/falling capture with counter reload option

	M48xID/M487KMCAN	M48xGC/M48xE8
Trigger numbers for EADC	1	2

Table 6.13-1 BPWM Features Comparison Table

6.14 Quadrature Encoder Interface (QEI)

6.14.1 Overview

There are two QEI controllers in this device. The Quadrature Encoder Interface (QEI) decodes speed of rotation and motion sensor information. It can be used in any application that uses a quadrature encoder for feedback.

6.14.2 Features

6.14.2.1 Quadrature Encoder Interface (QEI) Features

- Up to two QEI controllers, QEI0 and QEI1.
- Two QEI phase inputs, QEA and QEB; One Index input.
- A 32-bit up/down Quadrature Encoder Pulse Counter (QEI_CNT)
- A 32-bit software-latch Quadrature Encoder Pulse Counter Hold Register (QEI_CNTHOLD)
- A 32-bit Quadrature Encoder Pulse Counter Index Latch Register (QEI_CNTLATCH)
- A 32-bit Quadrature Encoder Pulse Counter Compare Register (QEI_CNTCMP) with a Pre-set Maximum Count Register (QEI_CNTMAX)
- One QEI control register (QEI_CTL) and one QEI Status Register (QEI_STATUS)
- Four Quadrature encoder pulse counter operation modes
  - Support x4 free-counting mode
  - Support x2 free-counting mode
  - Support x4 compare-counting mode
  - Support x2 compare-counting mode
- Encoder Pulse Width measurement mode
- Input frequency of QEA/QEB/IDX without noise filter must lower than PCLK/4
- Input frequency of QEA/QEB/IDX with noise filter must lower than Noise Filter Clk/8

6.15 Enhanced Input Capture Timer (ECAP)

6.15.1 Overview

The chip provides up to two units of Input Capture Timer/Counter whose capture function can detect the digital edge-changed signal at channel inputs. Each unit has three input capture channels. The timer/counter is equipped with up counting, reload and compare-match capabilities.

6.15.2 Features

- Up to two Input Capture Timer/Counter units, CAP0 and CAP1.
- Each unit has 3 input channels.
- Each unit has its own interrupt vector.
- Each input channel has its own capture counter hold register.
- 24-bit Input Capture up-counting timer/counter.
- With noise filter in front end of input ports.
- Edge detector with three options:
  - Rising edge detection
  - Falling edge detection
  - Both edge detection
- Captured events reset and/or reload capture counter.
- Supports compare-match function.

6.16 UART Interface Controller (UART)

6.16.1 Overview

The chip provides three channels of Universal Asynchronous Receiver/Transmitters (UART). The UART controller performs Normal Speed UART and supports flow control function. The UART controller performs a serial-to-parallel conversion on data received from the peripheral and a parallel-to-serial conversion on data transmitted from the CPU. Each UART controller channel supports ten types of interrupts. The UART controller also supports IrDA SIR, LIN, RS-485 and Single-wire function modes and auto-baud rate measuring function.

6.16.2 Features

- Full-duplex asynchronous communications
- Separates receive and transmit 16/16 bytes entry FIFO for data payloads
- Supports hardware auto-flow control
- Programmable receiver buffer trigger level
- Supports programmable baud rate generator for each channel individually
- Supports nCTS, incoming data, Received Data FIFO reached threshold and RS-485 Address Match (AAD mode) wake-up function
- Supports 8-bit receiver buffer time-out detection function
- Programmable transmitting data delay time between the last stop and the next START bit by setting DLY (UART_TOUT [15:8])
- Supports Auto-Baud Rate measurement and baud rate compensation function
  - 9600 bps for UART_CLK is selected LXT.
- Supports break error, frame error, parity error and receive/transmit buffer overflow detection function
- Fully programmable serial-interface characteristics
  - Programmable number of data bit, 5-, 6-, 7-, 8- bit character
  - Programmable PARITY bit, even, odd, no parity or stick PARITY bit generation and detection
  - Programmable STOP bit, 1, 1.5, or 2 STOP bit generation
- Supports IrDA SIR function mode
  - 3/16 bit duration for normal mode
- Supports LIN function mode (Only UART0/UART1 with LIN function)
  - LIN master/slave mode
  - Programmable break generation function for transmitter
  - Break detection function for receiver
- Supports RS-485 function mode
  - RS-485 9-bit mode
  - Hardware or software enables to program nRTS pin to control RS-485 transmission direction
- Supports PDMA transfer function
- Supports Single-wire function mode.

UART Feature	UART0/UART1	UART2 ~ UART7	SC_UART	USCI-UART
FIFO	16 Bytes	16 Bytes	4 Bytes	TX: 1byte RX: 2byte
Auto Flow Control (CTS/RTS)	√	√	-	√
IrDA	√	√	-	-
LIN	√	-	-	-
RS-485 Function Mode	√	√	-	√
nCTS Wake-up	√	√	-	√
Imcoming Data Wake-up	√	√	-	√
Received Data FIFO reached threshold Wake-up	√	√	-	-
RS-485 Address Match (AAD mode) Wake-up	√	√	-	-
Auto-Baud Rate Measurement	√	√	-	√
STOP bit Length	1, 1.5, 2 bit	1, 1.5, 2 bit	1, 2 bit	1, 2 bit
Word Length	5, 6, 7, 8 bits	5, 6, 7, 8 bits	5, 6, 7, 8 bits	6~13 bits
Even / Odd Parity	√	√	√	√
Stick Bit	√	√	-	-
Note: √= Supported				

Table 6.16-1 M480 Series UART Features

6.17 Ethernet MAC Controller (EMAC)

6.17.1 Overview

This chip provides an Ethernet MAC Controller (EMAC) for Network application. The Ethernet MAC controller consists of IEEE 802.3/Ethernet protocol engine with internal CAM function for recognizing Ethernet MAC addresses, Transmit-FIFO, Receive-FIFO, TX/RX state machine controller, time stamping engine for IEEE 1588, Magic Packet parsing engine and status controller. The EMAC supports both the MII and RMII (Reduced MII) interface to connect with external Ethernet PHY.

6.17.2 Features

- Supports IEEE Std. 802.3 CSMA/CD protocol
- Supports Ethernet frame time stamping for IEEE Std. 1588 – 2002 protocol
- Supports both half and full duplex for 10 Mbps or 100 Mbps operation
- Supports RMII interface
- Supports MII Management function to control external Ethernet PHY
- Supports pause and remote pause function for flow control
- Supports long frame (more than 1518 bytes) and short frame (less than 64 bytes) reception
- Supports 16 entries CAM function for Ethernet MAC address recognition
- Supports Magic Packet recognition to wake system up from Power-down mode
- Supports 256 bytes transmit FIFO and 256 bytes receive FIFO
- Supports DMA function

6.18 Smart Card Host Interface (SC)

6.18.1 Overview

The Smart Card Interface controller (SC controller) is based on ISO/IEC 7816-3 standard and fully compliant with PC/SC Specifications. It also provides status of card insertion/removal. It can also be set as UART mode to communicate with other device.

6.18.2 Features

- ISO 7816-3 T = 0, T = 1 compliant
- EMV2000 compliant
- Three ISO 7816-3 ports
- Separates receive/transmit 4 byte entry FIFO for data payloads
- Programmable transmission clock frequency
- Programmable receiver buffer trigger level
- Programmable guard time selection (11 ETU ~ 267 ETU)
- One 24-bit timer and two 8-bit timers for Answer to Request (ATR) and waiting times processing
- Supports auto direct / inverse convention function
- Supports transmitter and receiver error retry and error number limiting function
- Supports hardware activation sequence process, and the time between PWR on and CLK start is configurable
- Supports hardware warm reset sequence process
- Supports hardware deactivation sequence process
- Supports hardware auto deactivation sequence when detected the card removal
- Supports UART mode
  - Full duplex, asynchronous communications
  - Separates receiving / transmitting 4 bytes entry FIFO for data payloads
  - Supports programmable baud rate generator
  - Supports programmable receiver buffer trigger level
  - Programmable transmitting data delay time between the last stop bit leaving the TX-FIFO and the de-assertion by setting EGT (SCn_EGT[7:0])
  - Programmable even, odd or no parity bit generation and detection
  - Programmable stop bit, 1- or 2- stop bit generation

6.19 I²S Controller (I²S)

6.19.1 Overview

The I²S controller consists of I²S protocol to interface with external audio CODEC. Two 16-level depth FIFO for reading path and writing path respectively are capable of handling 8/16/24/32 bits audio data sizes. A PDMA controller handles the data movement between FIFO and memory.

6.19.2 Features

- Supports Master mode and Slave mode
- Capable of handling 8, 16, 24 and 32 bits data sizes in each audio channel
- Supports monaural and stereo audio data
- Supports I²S protocols: Philips standard, MSB-justified, and LSB-justified data format
- Supports PCM protocols: PCM standard, MSB-justified, and LSB-justified data format
- PCM protocol supports TDM multi-channel transmission in one audio sample, and the number of data channel can be set as 2, 4, 6, or 8
- Provides two 16-level FIFO data buffers, one for transmitting and the other for receiving
- Generates interrupt requests when buffer levels cross a programmable boundary
- Supports two PDMA requests, one for transmitting and the other for receiving

6.20 Serial Peripheral Interface (SPI)

6.20.1 Overview

The Serial Peripheral Interface (SPI) applies to synchronous serial data communication and allows full duplex transfer. Devices communicate in Master/Slave mode with the 4-wire bi-direction interface. The chip contains up to four sets of SPI controllers performing a serial-to-parallel conversion on data received from a peripheral device, and a parallel-to-serial conversion on data transmitted to a peripheral device. Each SPI controller can be configured as a master or a slave device and supports the PDMA function to access the data buffer. Each SPI controller also supports I^2S mode to connect external audio CODEC.

6.20.2 Features

- SPI Mode
  - Up to four sets of SPI controllers
  - Supports Master or Slave mode operation
  - Master mode up to 96 MHz (when chip works at V_{DD} = 2.7~3.6V)
  - Slave mode up to 96 MHz when SPI master device supports adjustment function of RX data sampling clock (when chip works at V_{DD} = 2.7~3.6V)
  - Slave mode up to 48 MHz when SPI master device does not support adjustment function of RX data sampling clock (when chip works at V_{DD} = 2.7~3.6V)
  - Configurable bit length of a transaction word from 8 to 32-bit
  - Provides separate 4-level depth transmit and receive FIFO buffers
  - Supports MSB first or LSB first transfer sequence
  - Supports Byte Reorder function
  - Supports Byte or Word Suspend mode
  - Supports PDMA transfer
  - Supports one data channel half-duplex transfer
  - Supports receive-only mode
- I^2S Mode
  - Supports Master or Slave
  - Capable of handling 8-, 16-, 24- and 32-bit word sizes
  - Each provides two 4-level FIFO data buffers, one for transmitting and the other for receiving
  - Supports monaural and stereo audio data
  - Supports PCM mode A, PCM mode B, I^2S and MSB justified data format
  - Supports two PDMA requests, one for transmitting and the other for receiving

6.21 Quad Serial Peripheral Interface (QSPI)

6.21.1 Overview

The Quad Serial Peripheral Interface (QSPI) applies to synchronous serial data communication and allows full duplex transfer. Devices communicate in Master/Slave mode with the 4-wire bi-direction interface. The chip contains one QSPI controller performing a serial-to-parallel conversion on data received from a peripheral device, and a parallel-to-serial conversion on data transmitted to a peripheral device.

The QSPI controller supports 2-bit Transfer mode to perform full-duplex 2-bit data transfer and also supports Dual and Quad I/O Transfer mode and the controller supports the PDMA function to access the data buffer.

6.21.2 Features

- Supports Master or Slave mode operation
- Master mode up to 96 MHz (when chip works at V_{DD} = 2.7V~3.6V)
- Slave mode up to 96 MHz when SPI master device supports adjustment function of RX data sampling clock (when chip works at V_{DD} = 2.7V~3.6V)
- Slave mode up to 48 MHz when SPI master device does not support adjustment function of RX data sampling clock (when chip works at V_{DD} = 2.7V~3.6V)
- Supports 2-bit Transfer mode
- Supports Dual and Quad I/O Transfer mode
- Configurable bit length of a transaction word from 8 to 32-bit
- Provides separate 8-level depth transmit and receive FIFO buffers
- Supports MSB first or LSB first transfer sequence
- Supports Byte Reorder function
- Supports Byte or Word Suspend mode
- Supports PDMA transfer
- Supports 3-Wire, no slave selection signal, bi-direction interface
- Supports one data channel half-duplex transfer
- Supports Transmit Double Transfer Rate Mode (TX DTR mode)
- Supports receive-only mode

6.22 SPI Synchronous Serial Interface Controller (SPI Master mode)

6.22.1 Overview

The SPI Synchronous serial Interface Controller for SPI master mode performs a serial-to-parallel conversion on data received from the peripheral, and a parallel-to-serial conversion on data received from MCU. This SPI controller can drive one external peripheral (External SPI Flash) and it is seen as the SPI master mode. It can generate an interrupt signal when data transfer is finished and can be cleared by writing 1 to the interrupt flag. The active level of device/slave select signal can be chosen to low active or high active, which depends on the peripheral. Writing a divisor into the SPIM_CTL1 register can program the frequency of serial clock output to the peripheral.

In SPI Flash controller, normal I/O mode contains four 32-bit transmit/receive buffers, and can provide 1 to 4 burst mode operation. The number of bits in each transaction can be 8, 16, 24, or 32; data can be transmitted/received up to four successive transactions in one transfer.

By DMA write mode, user can move data from SRAM to external SPI Flash component. In DMA read mode, user can move data from external SPI Flash component to SRAM. In direct memory mapping mode (DMM mode), this SPI Flash controller will translate the AHB bus commands into SPI Flash operations without MCU setting related SPI Flash command. Therefore users can access external SPI Flash as a ROM module.

In direct memory mapping mode with cache off mode, it will pre-fetch 4-word Flash data after a direct memory mapping access. when using direct memory mapping mode with cache on mode, it will use 32 Kbytes cache memory to reduce the number of accessing external SPI Flash component and the performance of SPI Flash access can be improved. To improve the read operation of SPI Flash without increasing the serial clock frequency, this SPI Flash controller supports DTR/DDR (Double Transfer Rate/Double Data Rate) read command codes that support Standard/Dual/Quad SPI modes. The one byte command code is still latched into the device on the rising edge of the serial clock similar to all other SPI commands. Once a DTR/DDR instruction code is accepted by the device, the address input and data output will be latched on both rising and falling edges of the serial clock.

In core coupled memory mode (CCM mode), the cache function is disabled by hardware automatically, and MCU can access this 32 Kbytes cache memory as general SRAM. For data protection, this SPI Flash controller supports cipher encryption and decryption circuits to protect data which user places into external SPI Flash when DMA read/write mode and direct memory mapping mode are used.

6.22.2 Features

- Supports maximum 32 Mbytes SPI Flash size
- Supports SPI master mode
- Supports Direct Memory Mapping Mode and Normal I/O Mode
- Supports 8/16/24/32 bits transaction for Normal I/O mode
- Provides burst mode operation in Normal I/O mode, which can transmit/receive data up to four successive transactions in one transfer
- Supports DMA mode read/write
- Supports standard (1-bit), dual (2-bit), and quad (4-bit) I/O transfer mode
- Supports Double Transfer Rate (DTR) / Double Data Rate (DDR) transfer mode
- Supports 32 Kbytes cache memory
- Supports 32 Kbytes Core Coupled Memory (CCM) when cache function disable
- Supports Cipher encryption/decryption
- One slave/device select line for external SPI Flash component

6.23 I²C Serial Interface Controller (I²C)

6.23.1 Overview

I²C is a two-wire, bi-directional serial bus that provides a simple and efficient method of data exchange between devices. The I²C standard is a true multi-master bus including collision detection and arbitration that prevents data corruption if two or more masters attempt to control the bus simultaneously.

There are two sets of I²C controllers which support Power-down wake-up function.

6.23.2 Features

The I²C bus uses two wires (SDA and SCL) to transfer information between devices connected to the bus. The main features of the I²C bus include:

- Supports up to three I²C ports
- Master/Slave mode
- Bidirectional data transfer between masters and slaves
- Multi-master bus (no central master)
- Supports High speed mode 3.4Mbps
- Supports Standard mode (100 kbps), Fast mode (400 kbps) and Fast mode plus (1 Mbps)
- Arbitration between simultaneously transmitting masters without corruption of serial data on the bus
- Serial clock synchronization allow devices with different bit rates to communicate via one serial bus
- Serial clock synchronization used as a handshake mechanism to suspend and resume serial transfer
- Built-in 14-bit time-out counter requesting the I²C interrupt if the I²C bus hangs up and timer-out counter overflow
- Programmable clocks allow for versatile rate control
- Supports 7-bit addressing and 10-bit addressing mode
- Supports multiple address recognition (four slave address with mask option)
- Supports Power-down wake-up function
- Supports PDMA with one buffer capability
- Supports setup/hold time programmable
- Supports Bus Management (SM/PM compatible) function

6.24 USCI - Universal Serial Control Interface Controller (USCI)

6.24.1 Overview

The Universal Serial Control Interface (USCI) is a flexible interface module covering several serial communication protocols. The user can configure this controller as UART, SPI, or I^2C functional protocol.

6.24.2 Features

The controller can be individually configured to match the application needs. The following protocols are supported:

- UART
- SPI
- I^2C

6.25 USCI – UART Mode

6.25.1 Overview

The asynchronous serial channel UART covers the reception and the transmission of asynchronous data frames. It performs a serial-to-parallel conversion on data received from the peripheral, and a parallel-to-serial conversion on data transmitted from the controller. The receiver and transmitter are independent, and the transmission and reception can be started separately.

The UART controller also provides auto flow control. There are three conditions to wake up the system.

6.25.2 Features

- Supports one transmit buffer and two receive buffer for data payload
- Supports hardware auto flow control function
- Supports programmable baud-rate generator
- Support 9-bit Data Transfer (Support 9-bit RS-485)
- Baud rate detection possible by built-in capture event of baud rate generator
- Supports PDMA transfer
- Supports Wake-up function (Incoming Data and nCTS Wakeup Only)

6.26 USCI - SPI Mode

6.26.1 Overview

The SPI protocol of USCI controller applies to synchronous serial data communication and allows full duplex transfer. It supports both master and Slave operation mode with the 4-wire bi-direction interface. SPI mode of USCI controller performs a serial-to-parallel conversion on data received from a peripheral device, and a parallel-to-serial conversion on data transmitted to a peripheral device. The SPI mode is selected by FUNMODE (USPI_CTL[2:0]) = 0x1

This SPI protocol can operate as master or Slave mode by setting the SLAVE (USPI_PROTCTL[0]) to communicate with the off-chip SPI Slave or master device. The application block diagrams in master and Slave mode are shown below.

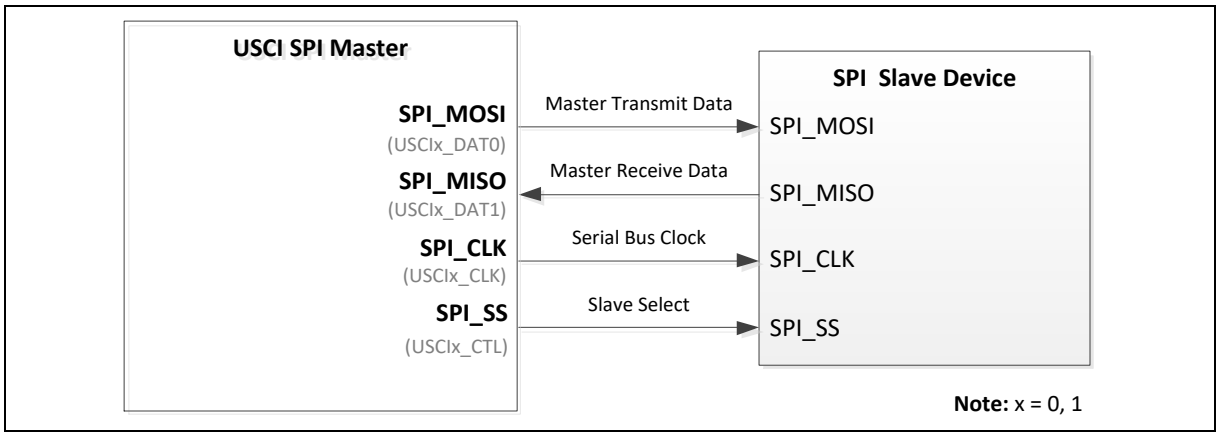

Figure 6.26-1 SPI Master Mode Application Block Diagram

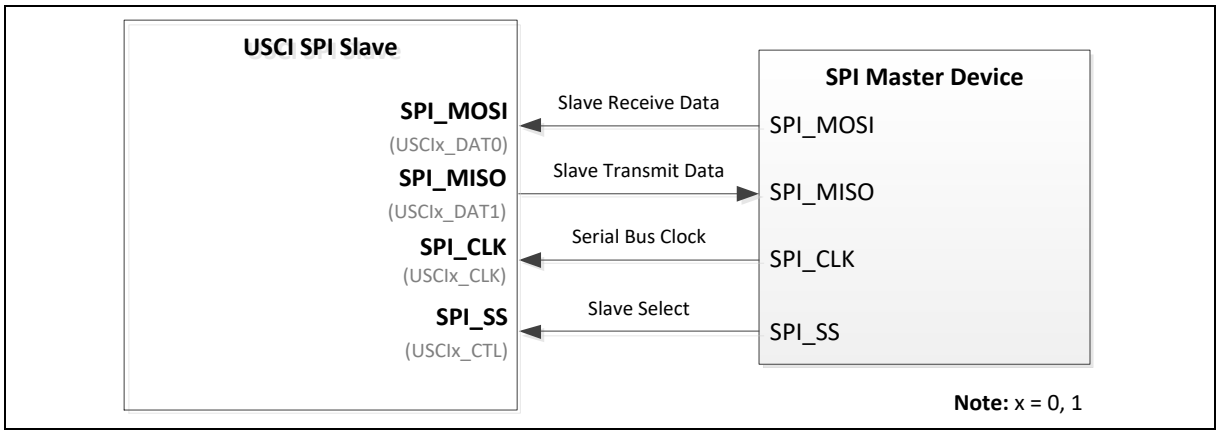

Figure 6.26-2 SPI Slave Mode Application Block Diagram

6.26.2 Features

- Supports Master or Slave mode operation (the maximum frequency -- Master = f_{PCLK} / 2, Slave < f_{PCLK} / 5)
- Configurable bit length of a transfer word from 4 to 16-bit
- Supports one transmit buffer and two receive buffers for data payload
- Supports MSB first or LSB first transfer sequence
- Supports Word Suspend function
- Supports PDMA transfer
- Supports 3-wire, no slave select signal, bi-direction interface
- Supports wake-up function by slave select signal in Slave mode
- Supports one data channel half-duplex transfer

6.27 USCI - I²C Mode

6.27.1 Overview

On I²C bus, data is transferred between a Master and a Slave. Data bits transfer on the SCL and SDA lines are synchronously on a byte-by-byte basis. Each data byte is 8-bit. There is one SCL clock pulse for each data bit with the MSB being transmitted first, and an acknowledge bit follows each transferred byte. Each bit is sampled during the high period of SCL; therefore, the SDA line may be changed only during the low period of SCL and must be held stable during the high period of SCL. A transition on the SDA line while SCL is high is interpreted as a command (START or STOP). Please refer to Figure 6.27-1 for more detailed I²C BUS Timing.

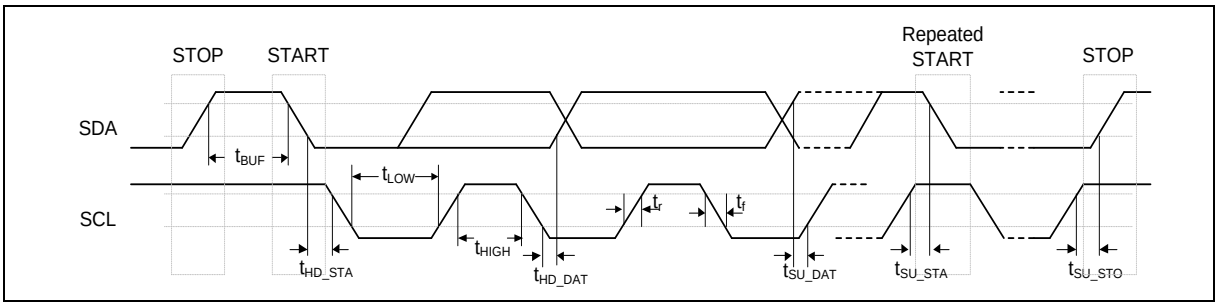

Figure 6.27-1 I²C Bus Timing

The device's on-chip I²C provides the serial interface that meets the I²C bus standard mode specification. The I²C port handles byte transfers autonomously. The I²C mode is selected by FUNMODE (UI2C_CTL [2:0]) = 100B. When enable this port, the USCI interfaces to the I²C bus via two pins: SDA and SCL. When I/O pins are used as I²C ports, user must set the pins function to I²C in advance.

Note: Pull-up resistor is needed for I²C operation because the SDA and SCL are set to open-drain pins when USCI is selected to I²C operation mode.

6.27.2 Features

- Full master and slave device capability
- Supports of 7-bit addressing, as well as 10-bit addressing
- Communication in standard mode (100 kBit/s) or in fast mode (up to 400 kBit/s)
- Supports multi-master bus
- Supports one transmit buffer and two receive buffer for data payload
- Supports 10-bit bus time-out capability
- Supports bus monitor mode.
- Supports Power down wake-up by START signal or address match
- Supports setup/hold time programmable
- Supports multiple address recognition (two slave address with mask option)

6.28 Controller Area Network (CAN)

6.28.1 Overview

The C_CAN consists of the CAN Core, Message RAM, Message Handler, Control Registers and Module Interface. The CAN Core performs communication according to the CAN protocol version 2.0 part A and B. The bit rate can be programmed to values up to 1 Mbps. For the connection to the physical layer, additional transceiver hardware is required.

For communication on a CAN network, individual Message Objects are configured. The Message Objects and Identifier Masks for acceptance filtering of received messages are stored in the Message RAM. All functions concerning the handling of messages are implemented in the Message Handler. These functions include acceptance filtering, the transfer of messages between the CAN Core and the Message RAM, and the handling of transmission requests as well as the generation of the module interrupt.

The register set of the C_CAN can be accessed directly by the software through the module interface. These registers are used to control/configure the CAN Core and the Message Handler and to access the Message RAM.

6.28.2 Features

- Supports CAN protocol version 2.0 part A and B
- Bit rates up to 1 Mbps
- 32 Message Objects
- Each Message Object has its own identifier mask
- Programmable FIFO mode (concatenation of Message Objects)
- Maskable interrupt
- Disabled Automatic Re-transmission mode for Time Triggered CAN applications
- Programmable loop-back mode for self-test operation
- 16-bit module interfaces to the AMBA APB bus
- Supports wake-up function

6.29 Secure Digital Host Controller (SDH)

6.29.1 Overview

The Secure Digital Host Controller (SD Host) has DMAC unit and SD unit. The DMAC unit provides a DMA (Direct Memory Access) function for SD to exchange data between system memory and shared buffer (128 bytes), and the SD unit controls the interface of SD/SDHC. The SDHOST controller can support SD/SDHC and cooperated with DMAC to provide a fast data transfer between system memory and cards.

6.29.2 Features

- AMBA AHB master/slave interface compatible, for data transfer and register read/write.
- Supports single DMA channel.
- Supports hardware Scatter-Gather function.
- Using single 128 Bytes shared buffer for data exchange between system memory and cards.
- Synchronous design for DMA with single clock domain, AHB bus clock (HCLK).
- Interface with DMAC for register read/write and data transfer.
- Supports SD/SDHC card.
- Completely asynchronous design for Secure Digital with two clock domains, HCLK and Engine clock, note that frequency of HCLK should be higher than the frequency of peripheral clock.
-

	M48xID/M487KMCAN	M48xGC/M48xE8
Secure Digital Host Controllers	2	1

Table 6.29-1 SDH Features Comparison Table

6.30 External Bus Interface (EBI)

6.30.1 Overview

This chip is equipped with an external bus interface (EBI) for external device use. To save the connections between an external device and a chip, EBI is operating at address bus and data bus multiplex mode. The EBI supports three chip selects that can connect three external devices with different timing setting requirements.

6.30.2 Features

- Supports up to three memory banks
- Supports dedicated external chip select pin with polarity control for each bank
- Supports accessible space up to 1 Mbytes for each bank, actually external addressable space is dependent on package pin out
- Supports 8-/16-bit data width
- Supports byte write in nresetdata width mode
- Supports Address/Data multiplexed Mode
- Supports Timing parameters individual adjustment for each memory block
- Supports LCD interface i80 mode
- Supports PDMA mode
- Supports variable external bus base clock (MCLK) which based on HCLK
- Supports configurable idle cycle for different access condition: Idle of Write command finish (W2X) and Idle of Read-to-Read (R2R)
- Supports address bus and data bus separate mode

6.31 USB 1.1 Device Controller (USBD)

6.31.1 Overview

There is one set of USB 2.0 full-speed device controller and transceiver in this device. It is compliant with USB 2.0 full-speed device specification and supports control/bulk/interrupt/ isochronous transfer types.

In this device controller, there are two main interfaces: the APB bus and USB bus which comes from the USB PHY transceiver. For the APB bus, the CPU can program control registers through it. There are 1 Kbytesytes internal SRAM as data buffer in this controller. For IN or OUT transfer, it is necessary to write data to SRAM or read data from SRAM through the APB interface or SIE. User needs to set the effective starting address of SRAM for each endpoint buffer through buffer segmentation register (USBD_BUFSEGx).

There are 12 endpoints in this controller. Each of the endpoint can be configured as IN or OUT endpoint. All the operations including Control, Bulk, Interrupt and Isochronous transfer are implemented in this block. The block of “Endpoint Control” is also used to manage the data sequential synchronization, endpoint states, current start address, transaction status, and data buffer status for each endpoint.

There are four different interrupt events in this controller. They are the no-event-wake-up, device plug-in or plug-out event, USB events, like IN ACK, OUT ACK etc, and BUS events, like suspend and resume, etc. Any event will cause an interrupt, and users just need to check the related event flags in interrupt event status register (USBD_INTSTS) to acknowledge what kind of interrupt occurring, and then check the related USB Endpoint Status Register (USBD_EPSTS0 and USBD_EPSTS1) to acknowledge what kind of event occurring in this endpoint.

A software-disconnect function is also supported for this USB controller. It is used to simulate the disconnection of this device from the host. If user enables SE0 bit (USBD_SE0), the USB controller will force the output of USB_D+ and USB_D- to level low and its function is disabled. After disable the SE0 bit, host will enumerate the USB device again.

For more information on the Universal Serial Bus, please refer to *Universal Serial Bus Specification Revision 1.1.*

6.31.2 Features

- Compliant with USB 2.0 Full-Speed specification
- Provides 1 interrupt vector with 5 different interrupt events (SOF, NEVWK, VBUSDET, USB and BUS)
- Supports Control/Bulk/Interrupt/Isochronous transfer type
- Supports suspend function when no bus activity existing for 3 ms
- Supports 12 endpoints for configurable Control/Bulk/Interrupt/Isochronous transfer types and maximum 1 Kbyte buffer size
- Provides remote wake-up capability

6.32 High Speed USB 2.0 Device Controller (HSUSBD)

6.32.1 Overview

The USB device controller interfaces the AHB bus and the UTMI bus. The USB controller contains both the AHB master interface and AHB slave interface. CPU programs the USB controller registers through the AHB slave interface. For IN or OUT transfer, the USB device controller needs to write data to memory or read data from memory through the AHB master interface. The USB device controller is complaint with USB 2.0 specification and it contains 12 configurable endpoints in addition to control endpoint. These endpoints could be configured to BULK, INTERRUPT or ISO. The USB device controller has a built-in DMA to relieve the load of CPU.

6.32.2 Features

- USB Specification reversion 2.0 compliant
- Supports 12 configurable endpoints in addition to Control Endpoint
- Each of the endpoints can be Isochronous, Bulk or Interrupt and either IN or OUT direction
- Three different operation modes of an in-endpoint – Auto Validation mode, Manual Validation mode, Fly mode
- Supports DMA operation
- 4092 Bytes Configurable RAM used as endpoint buffer
- Supports Endpoint Maximum Packet Size up to 1024 bytes

6.33 USB 1.1 Host Controller (USBH)

6.33.1 Overview

This chip is equipped with a USB 1.1 Host Controller (USBH) that supports Open Host Controller Interface (OpenHCI, OHCI) Specification, a register-level description of a host controller, to manage the devices and data transfer of Universal Serial Bus (USB).

The USBH supports an integrated Root Hub with a USB port, a DMA for real-time data transfer between system memory and USB bus, port power control and port over current detection.

The USBH is responsible for detecting the connect and disconnect of USB devices, managing data transfer, collecting status and activity of USB bus, providing power control and detecting over current of attached USB devices.

6.33.2 Features

- Compliant with Universal Serial Bus (USB) Specification Revision 1.1.
- Supports Open Host Controller Interface (OpenHCI) Specification Revision 1.0.
- Supports both full-speed (12Mbps) and low-speed (1.5Mbps) USB devices.
- Supports Control, Bulk, Interrupt and Isochronous transfers.
- Supports an integrated Root Hub.
- Supports a USB host port shared with USB device (OTG function).
- Supports port power control and port over current detection.
- Supports DMA for real-time data transfer.

6.34 USB 2.0 Host Controller (USBH)

6.34.1 Overview

This chip is equipped with a USB 2.0 HS/FS Host Controller (USBH) that supports Enhanced Host Controller Interface (EHCI) and Open Host Controller Interface (OpenHCI, OHCI) Specification, a register-level description of a host controller, to manage the devices and data transfer of Universal Serial Bus (USB).

The USBH supports an integrated Root Hub with a USB port, a DMA for real-time data transfer between system memory and USB bus, port power control and port over current detection.

The USBH is responsible for detecting the connect and disconnect of USB devices, managing data transfer, collecting status and activity of USB bus, providing power control and detecting over current of attached USB devices.

6.34.2 Features

- Compliant with Universal Serial Bus (USB) Specification Revision 2.0.
- Supports Enhanced Host Controller Interface (EHCI) Specification Revision 1.0
- Supports Open Host Controller Interface (OpenHCI) Specification Revision 1.0.
- Supports high-speed (480Mbps), full-speed (12Mbps) and low-speed (1.5Mbps) USB devices.
- Supports Control, Bulk, Interrupt, Isochronous and Split transfers.
- Supports an integrated Root Hub.
- Supports a port routing logic to route full/low speed device to OHCI controller.
- Supports two USB host port shared with USB device (OTG function).
- Supports port power control and port over current detection.
- Supports DMA for real-time data transfer.

6.35 USB On-The-Go (OTG)

6.35.1 Overview

The OTG controller interfaces to USB PHY and USB controllers which consist of a USB 1.1 host controller and a USB 2.0 FS device controller. The OTG controller supports HNP and SRP protocols defined in the “On-The-Go and Embedded Host Supplement to the USB 2.0 Revision 2.0 Specification”.

USB frame, including USB host, USB device, and OTG controller, can be configured as Host-only, Device-only, ID-dependent or OTG Device mode defined in USBROLE (SYS_USBPHY[1:0]). In Host-only mode, USB frame acts as USB host. USB frame can support both full-speed and low-speed transfer. In Device-only mode, USB frame acts as USB device. USB frame only supports full-speed transfer. In ID-dependent mode, USB frame can be USB Host or USB device depending on USB_ID pin state. In OTG device mode, the role of USB frame depends on the definition of OTG specification. USB frame only supports full-speed transfer when OTG device acts as a peripheral.

6.35.2 Features

- Built-in USB PHY
- Configurable to operate as:
  - Host-only
  - Device-only
  - ID-dependent: The role of USB frame is only dependent on USB_ID pin value--as USB Host (USB_ID pin is low) or USB Device (USB_ID pin is high). Not support HNP or SRP protocol.
  - OTG device: dependent on USB_ID pin status to be A-device (USB_ID pin is low) or B-device (USB_ID pin is high). Support HNP and SRP protocols.

6.36 High Speed USB On-The-Go (HSOTG)

6.36.1 Overview

The HSOTG controller interfaces to USB PHY and USB controllers which consist of a USB 2.0 host controller and a USB 2.0 HS device controller. The OTG controller supports HNP and SRP protocols defined in the “On-The-Go and Embedded Host Supplement to the USB 2.0 Revision 1.3 Specification”.

USB frame, including USB host, USB device, and OTG controller, can be configured as Host-only, Device-only, ID-dependent or OTG Device mode defined in HSUSBROLE (SYS_USBPHY[17:16]). In Host-only mode, USB frame acts as USB host. USB frame can support high-speed, full-speed and low-speed transfer. In Device-only mode, USB frame acts as USB device. USB frame supports high-speed and full-speed transfer. In ID-dependent mode, USB frame can be USB Host or USB device depends on USB_ID pin state. In OTG device mode, the role of USB frame depends on the definition of OTG specification. USB frame supports high-speed and full-speed transfer when OTG device acts as a peripheral.

6.36.2 Features

- Built in USB PHY
- Configurable to operate as:
  - Host-only
  - Device-only
  - ID-dependent: The role of USB frame is only dependent on USB_ID pin value--as USB Host (USB_ID pin is low) or USB Device (USB_ID pin is high). Not support HNP or SRP protocol.
  - OTG device: dependent on USB_ID pin status to be A-device (USB_ID pin is low) or B-device (USB_ID pin is high). Support HNP and SRP protocols.

6.37 CRC Controller (CRC)

6.37.1 Overview

The Cyclic Redundancy Check (CRC) generator can perform CRC calculation with four common polynomials CRC-CCITT, CRC-8, CRC-16, and CRC-32 settings.

6.37.2 Features

- Supports four common polynomials CRC-CCITT, CRC-8, CRC-16, and CRC-32
  - CRC-CCITT: $X^{16} + X^{12} + X^5 + 1$
  - CRC-8: $X^8 + X^2 + X + 1$
  - CRC-16: $X^{16} + X^{15} + X^2 + 1$
  - CRC-32: $X^{32} + X^{26} + X^{23} + X^{22} + X^{16} + X^{12} + X^{11} + X^{10} + X^8 + X^7 + X^5 + X^4 + X^2 + X + 1$
- Programmable seed value
- Supports programmable order reverse setting for input data and CRC checksum
- Supports programmable 1's complement setting for input data and CRC checksum
- Supports 8/16/32-bit of data width
  - 8-bit write mode: 1-AHB clock cycle operation
  - 16-bit write mode: 2-AHB clock cycle operation
  - 32-bit write mode: 4-AHB clock cycle operation
- Supports using PDMA to write data to perform CRC operation

6.38 Cryptographic Accelerator (CRYPTO)

6.38.1 Overview

The Crypto (Cryptographic Accelerator) includes a secure pseudo random number generator (PRNG) core and supports AES, DES/TDES, SHA, HMAC and ECC algorithms.

The PRNG core supports 64 bits, 128 bits, 192 bits, and 256 bits random number generation.

The AES accelerator is an implementation fully compliant with the AES (Advance Encryption Standard) encryption and decryption algorithm. The AES accelerator supports ECB, CBC, CFB, OFB, CTR, CBC-CS1, CBC-CS2, and CBC-CS3 mode.

The DES/TDES accelerator is an implementation fully compliant with the DES and Triple DES encryption/decryption algorithm. The DES/TDES accelerator supports ECB, CBC, CFB, OFB, and CTR mode.

The SHA accelerator is an implementation fully compliant with the SHA-160, SHA-224, SHA-256, SHA-384 and SHA-512 and corresponding HMAC algorithms.

The ECC accelerator is an implementation fully compliant with elliptic curve cryptography by using polynomial basis in binary field and prime filed.

6.38.2 Features

- PRNG
  - Supports 64 bits, 128 bits, 192 bits, and 256 bits random number generation
- AES
  - Supports FIPS NIST 197
  - Supports SP800-38A and addendum
  - Supports 128, 192, and 256 bits key
  - Supports both encryption and decryption
  - Supports ECB, CBC, CFB, OFB, CTR, CBC-CS1, CBC-CS2, and CBC-CS3 mode
  - Supports key expander
- DES
  - Supports FIPS 46-3
  - Supports both encryption and decryption
  - Supports ECB, CBC, CFB, OFB, and CTR mode
- TDES
  - Supports FIPS NIST 800-67
  - Implemented according to the X9.52 standard
  - Supports two keys or three keys mode
  - Supports both encryption and decryption
  - Supports ECB, CBC, CFB, OFB, and CTR mode
- SHA
  - Supports FIPS NIST 180, 180-2
  - Supports SHA-160, SHA-224, SHA-256, SHA-384 and SHA-512

- HMAC
  - Supports FIPS NIST 180, 180-2
  - Supports HMAC-SHA-160, HMAC-SHA-224, HMAC-SHA-256, HMAC-SHA-384 and HMAC-SHA-512
- ECC
  - Supports both prime field GF(p) and binary filed GF(2^m)
  - Supports NIST P-192, P-224, P-256, P-384 and P-521
  - Supports NIST B-163, B-233, B-283, B-409 and B-571
  - Supports NIST K-163, K-233, K-283, K-409 and K-571
  - Supports point multiplication, addition and doubling operations in GF(p) and GF(2^m)
  - Supports modulus division, multiplication, addition and subtraction operations in GF(p)

Engine	Mode	M48xID/M487KMCAN	M48xGC/M48xE8
PRNG		●	●
AES		●	●(Only support channel 0)
DES/TDES		●	
SHA/HMAC	SHA-160	●	
	SHA-224	●	
	SHA-256	●	●
	SHA-384	●	
	SHA-512	●	
ECC	P-192/224/256	●	●
	P-384/521	●	
	B-163/233	●	●
	B-283/409/571	●	
	K-163/233	●	●
	K-283/409/571	●	
	Curve25519		●
	Side-channel attack protection		●

Table 6.38-1 Crypto Features Comparison Table at Different Chip

6.39 Camera Capture Interface Controller (CCAP)

6.39.1 Overview

The camera capture interface controller (CCAP) is designed to capture image data from a sensor. After capturing or fetching image data, it processes the image data. Then, the embedded DMA controller will move the data from the internal FIFO to system memory with AHB bus.

6.39.2 Features

- CCIR601 & CCIR656 & 4-bit interfaces supported for connection to CMOS image sensor
- YUV422 and RGB565 color format supported for data-in from CMOS sensor
- YUV422, RGB565, RGB555 and Y-only color supported for packet data output.
- Single interrupt source to interrupt controller from maskable interrupt source: Address Match, Bus Master Transfer Error, Video Frame End
- Embedded DMA controller supported to transfer data from internal FIFO to system memory through AHB bus
- CROP function supported to crop input image to the required size for digital application.
- Frame rate scaling-down supported
- Image scaling-down supported
- Bit luma output with 8-bit threshold setting supported.

6.40 Enhanced 12-bit Analog-to-Digital Converter (EADC)

6.40.1 Overview

The chip contains one or two 12-bit successive approximation analog-to-digital converter (SAR EADC converter) with 16 external input channels and 3 internal channels. The EADC0/1 converter can be started by software trigger, EPWM0/1 triggers, BPWM0/1 triggers, timer0~3 overflow pulse triggers, ADINT0, ADINT1 interrupt EOC (End of conversion) pulse trigger and external pin (EADC0/1_ST) input signal.

6.40.2 Features

- Analog input voltage range: 0~ V_{REF} (Max to 3.6V)
- Reference voltage from V_{REF} pin.
- 12-bit resolution and 10-bit accuracy is guaranteed
- Up to 16 single-end analog external input channels or 8 pair differential analog input channels
- Up to 3 internal channels, they are band-gap voltage (V_{BG}), temperature sensor (V_{TEMP}), and Battery power (V_{BAT})
- Four EADC interrupts (ADINT0~3) with individual interrupt vector addresses for each EADC
- Maximum EADC clock frequency is 72 MHz for each EADC
- Up to 5.14 MSPS conversion rate for each EADC at the same time
- Configurable EADC internal sampling time for each EADC
- 12-bit, 10-bit, 8-bit, 6-bit configurable resolution for each EADC
- Supports calibration and load calibration words capability for each EADC
- Supports internal reference voltage V_{REF}: 1.6V, 2.0V, 2.5V, and 3.0V.
- Supports three power saving modes:
  - Deep Power-down mode
  - Power-down mode
  - Standby mode
- Up to 19 sample modules
  - Each of sample modules which is configurable for EADC converter channel (EADC0/1_CH0~15) and trigger source for each EADC
  - Sample module 16~18 is fixed for EADC0channel 16, 17, 18 input sources as band-gap voltage, temperature sensor, and battery power (V_{BAT})
  - Double buffer for sample control logic module 0~3
  - Configurable sampling time for each sample module
  - Conversion results are held in 19 data registers with valid and overrun indicators

- Any EADC conversion of each EADC can be started by:
  - Write 1 to SWTRGn (EADC0/1_SWTRG[n], n = 0~18)
  - External pin EADC0/1_ST
  - Timer0~3 overflow pulse triggers
  - ADINT0 and ADINT1 interrupt EOC (End of conversion) pulse triggers
  - EPWM/BPWM triggers
- Supports PDMA transfer
- Conversion Result Monitor by Compare Mode

	M48xID/M487KMCAN	M48xGC/M48xE8
Number of EADC	1	2

Table 6.40-1 EADC Features Comparison Table

6.41 Digital to Analog Converter (DAC)

6.41.1 Overview

The DAC module is a 12-bit, voltage output digital-to-analog converter. It can be configured to 12- or 8-bit output mode and can be used in conjunction with the PDMA controller. The DAC integrates a voltage output buffer that can be used to reduce output impendence and drive external loads directly without having to add an external operational amplifier.

6.41.2 Features

- Analog output voltage range: 0~AV_{DD}.
- Supports 12- or 8-bit output mode.
- Rail to rail settle time 6us.
- Supports up to two 12-bit 1 MSPS voltage type DAC.
- Reference voltage from internal reference voltage (INT_VREF), V_{REF} pin.
- DAC maximum conversion updating rate 1 MSPS.
- Supports voltage output buffer mode and bypass voltage output buffer mode.
- Supports software and hardware trigger, including Timer0~3, EPWM0, EPWM1, and external trigger pin to start DAC conversion.
- Supports PDMA mode.
- Supports group mode of synchronized update capability for two DACs.

6.42 Analog Comparator Controller (ACMP)

6.42.1 Overview

The chip provides two comparators. The comparator output is logic 1 when positive input is greater than negative input; otherwise, the output is 0. Each comparator can be configured to generate an interrupt when the comparator output value changes.

6.42.2 Features

- Analog input voltage range: 0 ~ AV_{DD} (voltage of AV_{DD} pin)
- Up to two rail-to-rail analog comparators
- Supports hysteresis function
  - Supports programmable hysteresis window: 0mV, 10mV, 20mV and 30mV
- Supports wake-up function
- Supports programmable propagation speed and low power consumption
- Selectable input sources of positive input and negative input
- ACMP0 supports:
  - 4 multiplexed I/O pins at positive sources:
    - ACMP0_P0, ACMP0_P1, ACMP0_P2, or ACMP0_P3
  - 4 negative sources:
    - ACMP0_N
    - Comparator Reference Voltage (CRV)
    - Internal band-gap voltage (VBG)
    - DAC0 output (DAC0_OUT)
- ACMP1 supports
  - 4 multiplexed I/O pins at positive sources:
    - ACMP1_P0, ACMP1_P1, ACMP1_P2, or ACMP1_P3
  - 4 negative sources:
    - ACMP1_N
    - Comparator Reference Voltage (CRV)
    - Internal band-gap voltage (VBG)
    - DAC0 output (DAC0_OUT)
- Shares one ACMP interrupt vector for all comparators
- Interrupts generated when compare results change (Interrupt event condition is programmable)
- Supports triggers for break events and cycle-by-cycle control for EPWM
- Supports window compare mode and window latch mode

6.43 OP Amplifier (OPA)

6.43.1 Overview

This device is equipped with three operational amplifiers. Users can enable each of them individually, by their application purpose.One of these OP amplifier outputs is connected to ADC channel for measurement requirement.

6.43.2 Features

- Analog input voltage range: 0~V_{DD}.
- Supports up to 3 operator amplifiers.
- Supports to use Schmitt trigger buffer output for simple comparator function.
- Supports to Schmitt trigger buffer output interrupts.

6.44 Peripherals Interconnection

6.44.1 Overview

Some peripherals have interconnections which allow autonomous communication or synchronous action between peripherals without needing to involve the CPU. Peripherals interact without CPU saves CPU resources, reduces power consumption, operates with no software latency and fast responds.

6.44.2 Peripherals Interconnect Matrix Table

Source	Destination									
	BPWM	DAC	EADC	ECAP	EPWM	HIRC	IRCTRIM	HIRC48M	TIMERPWM	QEI
ACMP	-	-	-	-	3	-	-	-	3,6	
BOD	-	-	-	-	3	-	-	-	3	
BPWM	4	-	1	-	4	-	-	-	-	
Clock Fail	-	-	-	-	3	-	-	-	3	
CPU Lockup	-	-	-	-	3	-	-	-	3	
EADC	-	-	-	-	3	-	-	-	-	
EPWM	4	1	1	-	4	-	-	-	-	
IRCTRIM	-	-	-	-	-	2	-	2	-	
LIRC	-	-	-	-	-	-	-	-	6	
LXT	-	-	-	-	-	-	2	-	-	
QEI	-	-	-	8	-	-	-	-	-	
SRAM	-	-	-	-	3	-	-	-	3	
TIMERPWM	5	1	1	-	5	-	-	-	7	9
USB11Device	-	-	-	-	-	-	2	-	-	

Table 6.44-1 Peripherals Interconnect Matrix table

6.44.3 Functional Description

6.44.3.1 From EPWM, TIMER to EADC/DAC

EPWM Trigger EADC Conversion

EPWM can be one of the EADC conversion trigger source.

Setting the EADC external hardware trigger input source from EPWM trigger is described in TRM section 6.40.5.8.

EPWM Trigger DAC Conversion

EPWM can also be used to trigger DAC conversion.

Setting the DAC hardware trigger input source from EPWM trigger is described in TRM section 6.41.5.6.

The detailed EPWM trigger conditions are described in TRM section 6.12.5.27.

BPWM Trigger EADC Conversion

BPWM can be one of the EADC conversion trigger source.

Setting the EADC external hardware trigger input source from BPWM trigger is described in TRM section 6.40.5.8.

The detailed BPWM trigger conditions are described in TRM section 6.13.5.16.

Timer Trigger EADC Conversion

Timer0 ~ Timer3 can be one of the EADC conversion trigger source. When timer counter value matches the timer compared value or when the TMx_EXT pin edge transition meets setting, timer will trigger the ADC to start the conversion.

Setting the EADC external hardware trigger input source from timer trigger is described in TRM section 6.40.5.9.

Timer Trigger DAC Conversion

Setting the DAC hardware trigger input source from TIMER trigger is described in TRM section 6.41.5.6.

The detailed Timer trigger conditions are described in TRM section 6.8.5.10.

6.44.3.2 From LXT and USB 1.1 Device to HIRC TRIM & RC 48 MHz

Use LXT or USB Synchronous Mode to System Auto-trim HIRC Circuit

This chip supports auto-trim function: the HIRC trim (12 MHz RC oscillator) and RC 48 MHz oscillator, according to the accurate external 32.768 kHz crystal oscillator or internal USB synchronous mode, automatically gets accurate output frequency, 0.25 % deviation within all temperature ranges.

The detail of HIRC trim setting is described in section 6.2.9

6.44.3.3 From ACMP, BOD, Clock Fail,SRAM Parity Error and CPU Lockup to EPWM/ TIMERPWM

EPWM Brake Source

EPWM brake source can be ACMP0/1_O output signal or EADC result monitor or several different system fail conditions include clock fail, Brown-out detect, and Core lockup and SRAM Parity Error. When system fault, EPWM brake signal generated, EPWM output will be set to protect the power switch controlled by EPWM.

The detailed setting of EPWM brake function is described in TRM section 6.12.5.23.

TIMERPWM Brake Source

TIMERPWM brake source can be ACMP0/1_O output signal or several different system fail conditions include clock fail, Brown-out detect, and Core lockup and SRAM Parity Error. When system fault, EPWM brake signal generated, EPWM output will be set to protect the power switch controlled by EPWM.

The detailed setting of TIMERPWM brake function is described in TRM section 6.8.6.17.

6.44.3.4 From EPWM/ BPWM to EPWM/ BPWM

EPWM Synchronous Start Function

Select synchronous source from EPWM0 or EPWM1 or BPWM0 or BPWM1, and select EPWM channels. The chosen EPWM channels will start counting at the same time once the synchronous start function is enabled and CNTSEN(EPWM_SSTRG[0]) is set.

The detailed setting of EPWM synchronous start function is described in TRM section 6.12.5.19.

BPWM Synchronous Start Function

Select synchronous source from EPWM0 or EPWM1 or BPWM0 or BPWM1, and select BPWM channels. The chosen BPWM channels will start counting at the same time once the synchronous start function is enabled and CNTSEN(BPWM_SSTRG[0]) is set.

The detailed setting of BPWM synchronous start function is described in TRM section 6.13.5.11.

6.44.3.5 From TIMER to EPWM/BPWM

Timer Generates Trigger Pulses as EPWM External Clock Source

Timer0 ~ Timer3 can generates trigger pules as EPWM/BPWM external clock source.

When timer counter value matches the timer compared value or when the TMx_EXT pin edge transition meets setting, timer can generate a trigger pulse by setting described in TRM section 6.8.5.10.

The setting of EPWM/BPWM clock source are described in TRM section 6.13.3 / 6.12.3.

6.44.3.6 From ACMP and LIRC to Timer Capture Function

Measure the Time Interval of ACMP0/1 Output Signal or LIRC Clock Speed

Sets the timer capture source from ACMP0/1 output signal or LIRC clock and measures the time interval of the signal by using timer capture function. Users can use the results of time interval to trim LIRC through software or to get the ACMP0/1 output pulse width.

The detail of time capture function setting is described in TRM section 6.8.5.8 and 6.8.5.9.

6.44.3.7 From Timer0/2 to Timer1/3

Inter-Timer Trigger Capture Mode

Timer0/2 will be forced in event counting mode, counting with external event, and will generate an internal signal (INTR_TMR_TRG) to trigger Timer1/3 start or stop counting. The Timer1/3 will be forced in capture mode and start/stop trigger-counting by Timer0/2 counter status.

The detail of inter-timer trigger capture mode is described in TRM section 6.8.5.11.

6.44.3.8 From QEI to ECAP

ECAP Input Noise Filter

The architecture of ECAP input noise filter is similar to that one used for QEI. With 6 sampling-rate options, it supports a wide range of filtering noise, the duration of filtered noise and the duration of the signal that is guaranteed to be sampled.

The detailed setting of modulation is described in TRM section 6.14.5.1.

6.44.3.9 From TIMER to QEI

TIMER TIF Event to QEI

When QEI bit HOLDCNT(QEI_CTL[24]) set, the CNT(QEI_CNT[31:0]) content will be captured into QEI Counter Hold Register CNTHOLD(QEI_CNTHOLD[31:0]), the data will be held until the next HOLDCNT (QEI_CTL[24]) trigger comes. The bit HOLDCNT can be set by writing 1 to it or the rising edge of timers interrupt flags TIF (TIMERx_INTSTS[0])The detailed setting of modulation is described in TRM section 6.14.5.11.

The detailed setting of modulation is described in TRM section 6.8.5.1.

7 APPLICATION CIRCUIT

7.1 Power Supply Scheme with External V_{REF}

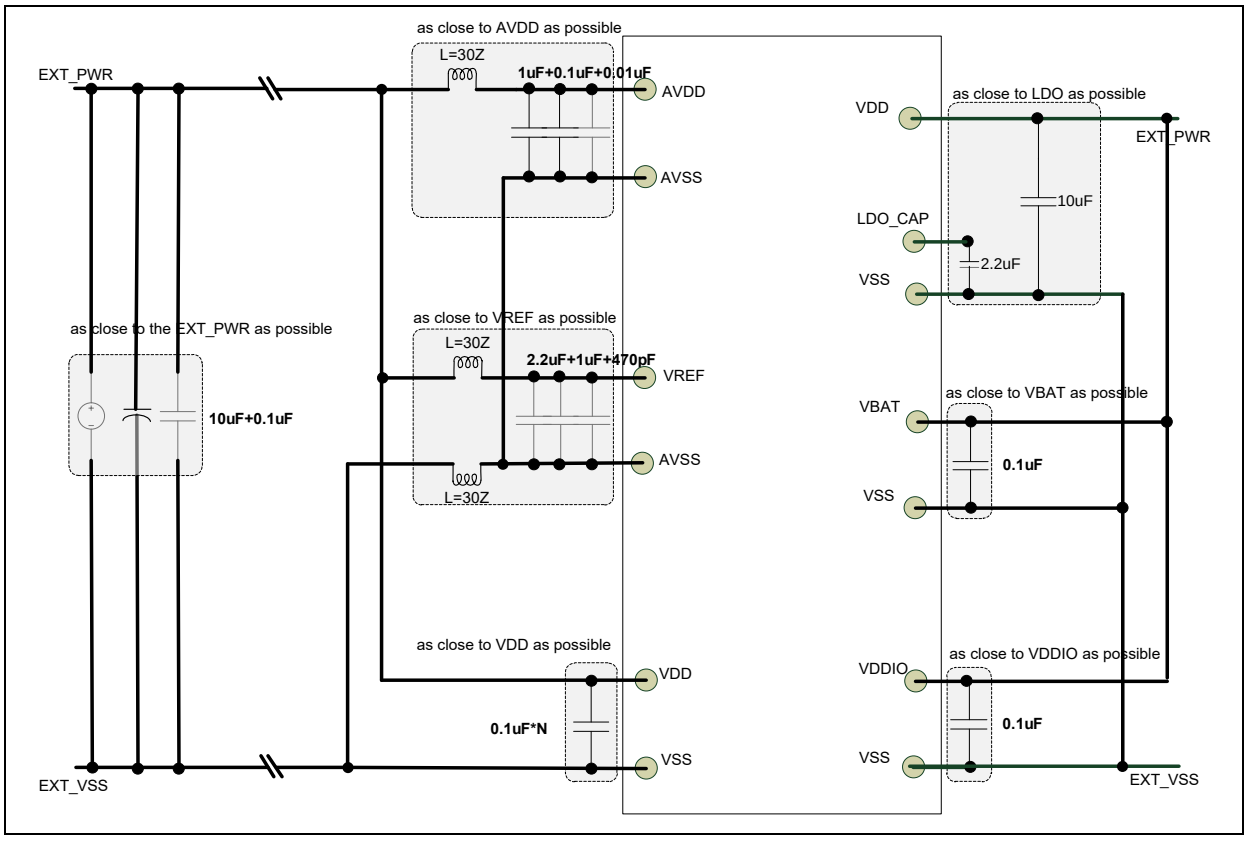

Note: Total capacitance of LDO_CAP pin is 2.2uF.

7.2 Power Supply Scheme with Internal V_{REF}

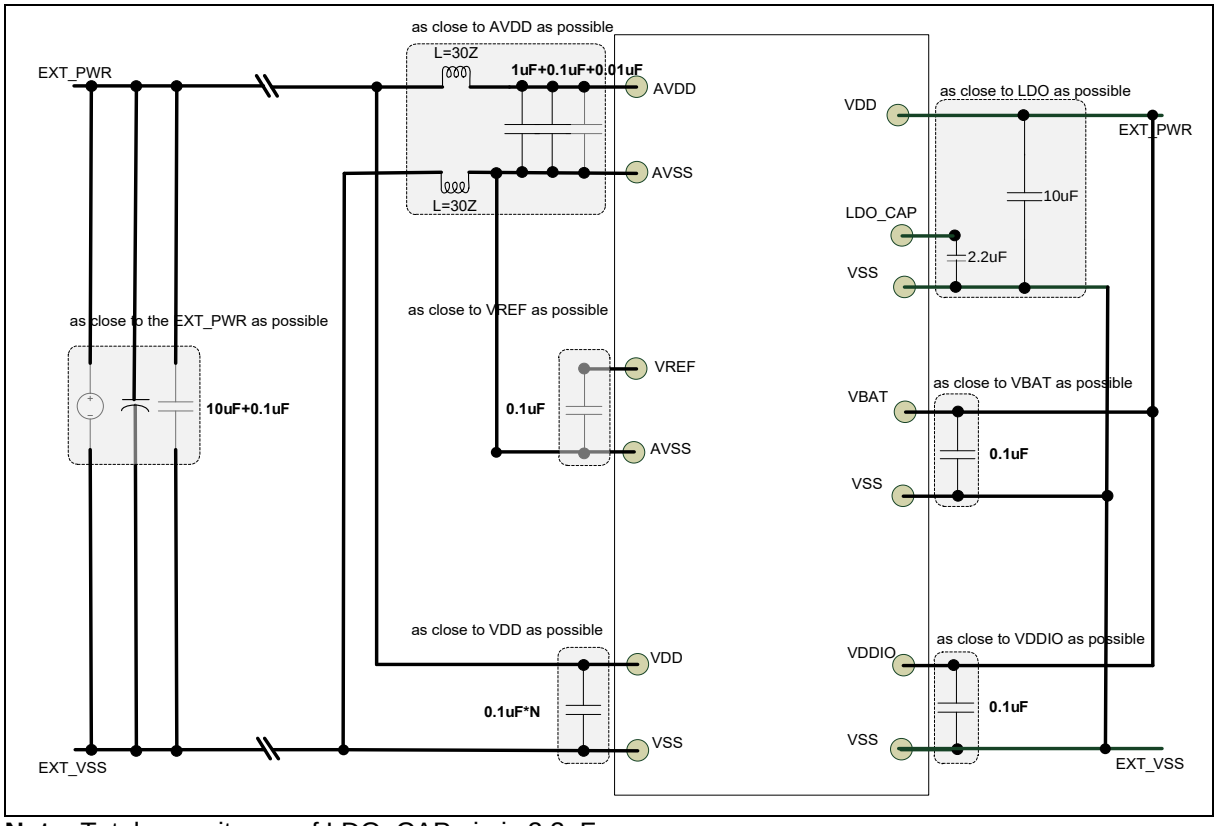

Note: Total capacitance of LDO_CAP pin is 2.2uF.

7.3 Power Supply Scheme with V_{REF} and External RTC with Battery Power

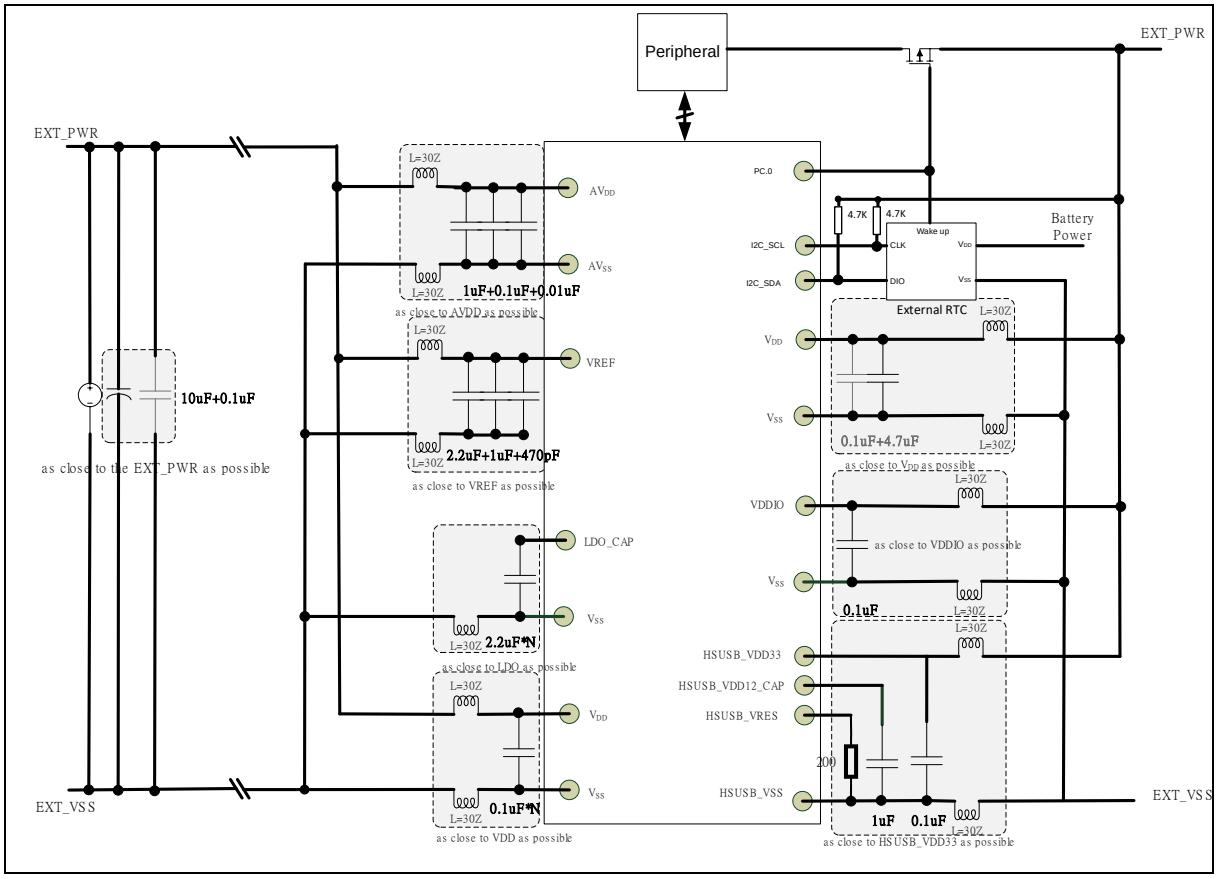

Note: Total capacitance of LDO_CAP pin is 2.2uF.

7.4 Power Supply Scheme with V_{REF} and Internal RTC with Battery Power

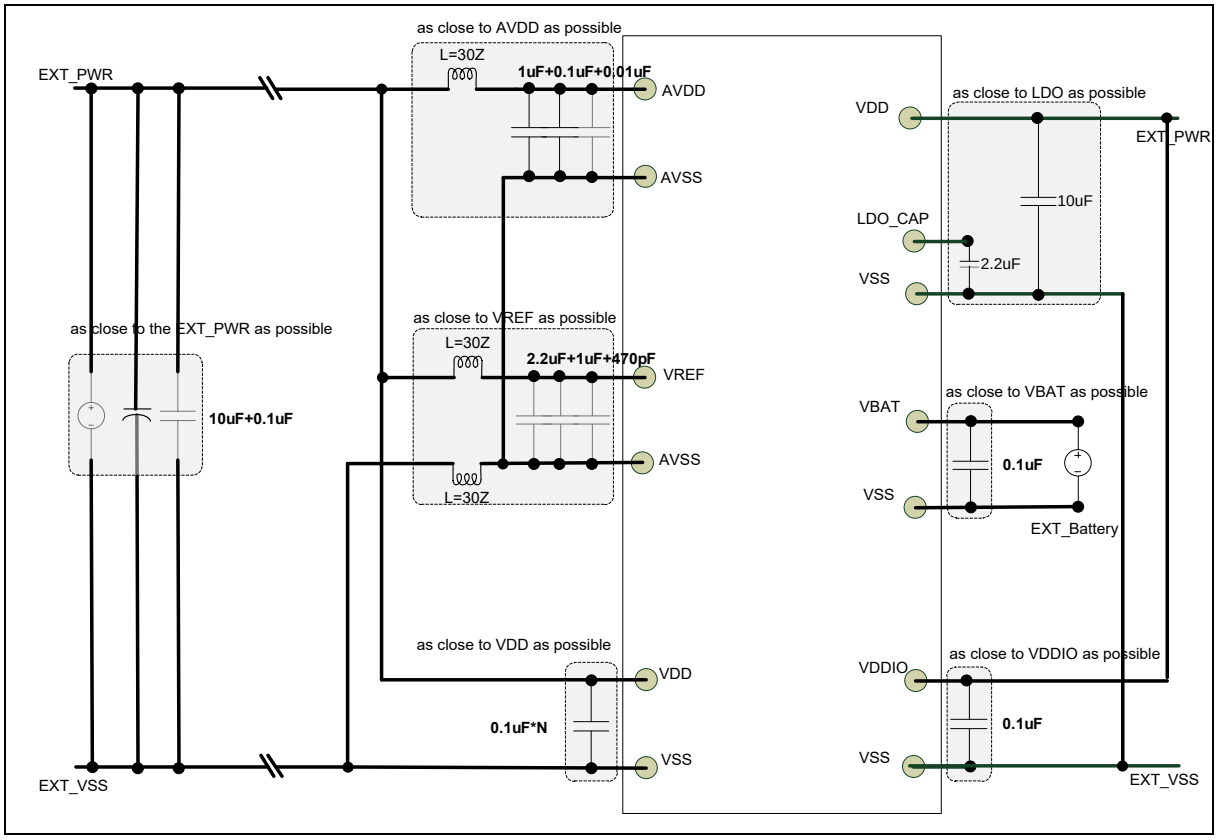

Note: Total capacitance of LDO_CAP pin is 2.2uF.

7.5 Peripheral Application Scheme

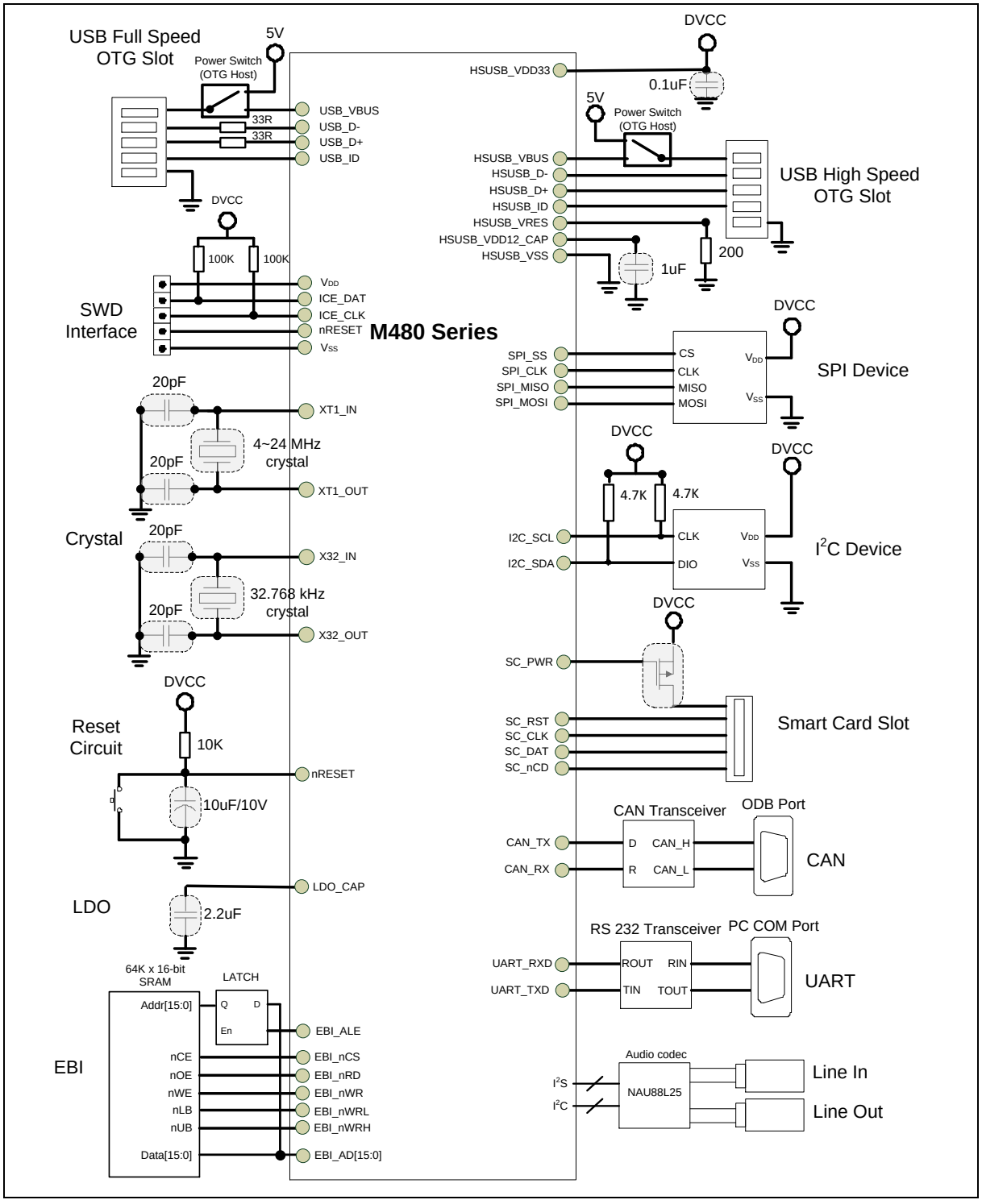

Note 1: USB_ID, HSUSB _ID could be floating using USB or USB HS without OTG.

Note 2: It is recommended to use 100 kΩ pull-up resistor on both ICE_DAT and ICE_CLK pin.

Note 3: It is recommended to use 10 kΩ pull-up resistor and 10 uF capacitor on nRESET pin.

Note 4: Total capacitance of LDO_CAP pin is 2.2uF.

8 ELECTRICAL CHARACTERISTICS FOR M48XID/M487KMCAN

8.1 Absolute Maximum Ratings

8.1.1 Voltage Characteristics

Parameter	Symbol	Min	Max	Unit
V_{DD}-V_{SS}[*1]	DC Power Supply	-0.3	4	V
V_{DDIO}-V_{SS}	V_{DDIO} Power Supply	-0.3	4	V
$\|V_{DDX} – V_{DD}\|$	Variations between different power pins		50	mV
$\|V_{DD} –AV_{DD}\|$	Allowed voltage difference for V_{DD} and AV_{DD}		50	mV
$\|V_{SSX} - V_{SS}\|$	Variations between different ground pins		50	mV
$\|V_{SS} - AV_{SS}\|$	Allowed voltage difference for V_{SS} and AV_{SS}		50	mV
V_{IN}	Input Voltage on 5V-tolerance GPIO		5.5	V
	Input Voltage on RTC domain (PF.6 ~ PF.11)		V_{DD}	V
	Input Voltage on any other pin[*2]		V_{DD}	V

Note:

1. All main power (V_{DD}, AV_{DD}) and ground (V_{SS}, AV_{SS}) pins must always be connected to the external power supply, in the permitted range.
2. Non 5V-tolerance PIN: PA.8 ~ 15; PB.0 ~ 15; PD.10, 11, 12; PF.2, 3, 4, 5; All USB High Speed PIN and nRESET PIN.

Table 8.1-1 Voltage Characteristics

8.1.2 Current Characteristics

Symbol	Parameter	Min	Max	Unit
I_{DD}	Maximum Current into V_{DD}		200	mA
I_{DDIO}	Maximum Current into V_{DDIO}		100	
I_{SS}	Maximum Current out of V_{SS}		100	
I_{IO}	Maximum Current sunk by a I/O Pin		20	
	Maximum Current Sourced by a I/O Pin		20	
	Maximum Current Sunk by Total I/O Pins		100	
	Maximum Current Sourced by Total I/O Pins		100	

Table 8.1-2 Current Characteristics

8.1.3 Thermal Characteristics

The average junction temperature can be calculated by using the following equation:

$T_J = T_A + (P_D \times \theta_{JA})$

- T_A = ambient temperature (℃)
- θ_{JA} = thermal resistance junction-ambient (℃/Watt)
- P_D = sum of internal and I/O power dissipation

Symbol	Description	Min	Typ	Max	Unit
T_A	Operating ambient temperature (M48xID)	-40	-	105	℃
	Operating ambient temperature (M487KMCAN)	-40	-	85	
T_J	Operating junction temperature	-40	-	125	
T_{ST}	Storage temperature	-65	-	150	
θ_{JA}[*1]	Thermal resistance junction-ambient 33-pin QFN(5x5 mm)	-	39.6	-	℃/Watt
	Thermal resistance junction-ambient 48-pin QFN(5x5 mm)	-	37.8	-	℃/Watt
	Thermal resistance junction-ambient 48-pin LQFP(7x7 mm)	-	60	-	℃/Watt
	Thermal resistance junction-ambient 64-pin LQFP(7x7 mm)	-	58	-	℃/Watt
	Thermal resistance junction-ambient 128-pin LQFP(14x14 mm)	-	38.5	-	℃/Watt
	Thermal resistance junction-ambient 144-pin LQFP(14x14 mm)		36.9		℃/Watt

Note:

1. Determined according to JESD51-2 Integrated Circuits Thermal Test Method Environment Conditions

Table 8.1-3 Thermal Characteristics

8.1.4 EMC Characteristics

8.1.4.1 Electrostatic discharge (ESD)

For the Nuvoton MCU products, there are ESD protection circuits which built into chips to avoid any damage that can be caused by typical levels of ESD.

8.1.4.2 Static latchup

Two complementary static tests are required on six parts to assess the latchup performance:

- A supply overvoltage is applied to each power supply pin

- A current injection is applied to each input, output and configurable I/O pin

8.1.4.3 *Electrical fast transients (EFT)*

In some application circuit compoment will produce fast and narrow high-frequency trasnients bursts of narrow high-frequency transients on the power distribution system..

- Inductive loads:
  - Relays, switch contactors
  - Heavy-duty motors when de-energized etc.

The fast transient immunity requirements for electronic products are defined in IEC 61000-4-4 by International ElectrotechnicalCommission (IEC).

Symbol	Parameter	Conditions	Maximum Value	Unit
V_{EFTB}	1. Fast transient voltage burst limits to be applied through 100 pF + 47uF on V_{DD} and V_{SS} pins to induce a functional disturbance 2. to be applied through 2.2uF on LDO_Pin and V_{SS} pins	V_{DD} = 3.3 V, LQFP144, T_A = +25 °C, f_{HCLK} = 160 MHz	4.4	kV

Table 8.1-4 EMS Characteristics

Symbol	Ratings	Conditions	Maximum Value	Unit
$V_{ESD(HBM)}$	Electrostatic discharge voltage (human body model)	T_A = +25 °C	1[*1]	kV
$V_{ESD(CDM)}$	Electrostatic discharge voltage (charge device model)	T_A = +25 °C	0.5[*1]	

Note:
1. Guaranteed by characterization results, not tested in production.

Table 8.1-5 ESD Characteristics

Symbol	Parameter	Conditions	Value	Unit
LU	Static latch-up class	T_A = +25 °C	400mA	mA

Note:
1. Guaranteed by characterization results, not tested in production.

Table 8.1-6 Electrical Characteristics

8.1.5 Package Moisture Sensitivity(MSL)

The MSL rating of an IC determines its floor life before the board mounting once its dry bag has been opened. All Nuvoton surface mount chips have a moisture level classification. The information is also displayed on the bag packing.

Pacakge	MSL
33-pin QFN(5x5 mm) [*1]	MSL 3
48-pin QFN(5x5 mm) [*1]	MSL 3
48-pin LQFP(7x7 mm) [*1]	MSL 3
64-pin LQFP(7x7 mm) [*1]	MSL 3
128-pin LQFP(14x14 mm) [*1]	MSL 3
144-pin LQFP(20x20mm) [*1]	MSL 3
Note: 1. Determined according to IPC/JEDEC J-STD-020	

Table 8.1-7 Package Moisture Sensitivity(MSL)

8.1.6 Soldering Profile

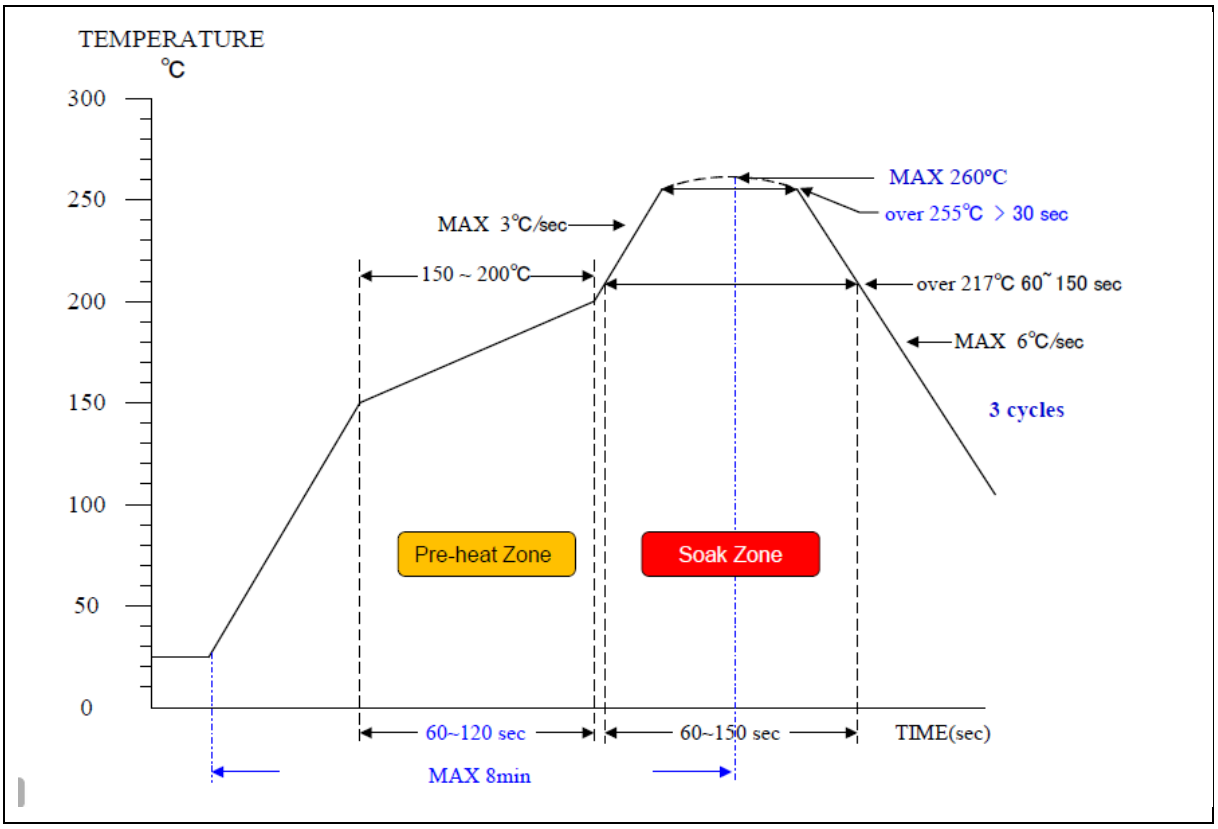

Figure 8.1-1 Soldering Profile From J-STD-020C

Porfile Feature	Pb Free Package
Average ramp-up rate (217°C to peak)	3℃/sec. max
Preheat temperature 150°C ~200°C	60 sec. to 120 sec.
Temperature maintained above 217°C	60 sec. to 150 sec.
Time with 5°C of actual peak temperature	> 30 sec.
Peak temperature range	260°C
Ramp-down rate	6℃/sec ax.
Time 25°C to peak temperature	8 min. max
Note: 1. Determined according to J-STD-020C	

Table 8.1-9 Soldering Profile

8.2 General Operating Conditions

(V_{DD}-V_{SS} = 1.8 ~ 3.6V, T_A = 25°C, HCLK = 192 MHz unless otherwise specified.)

Symbol	Parameter	Conditions	Min	Typ	Max	Unit
f_{HCLK}	Internal AHB clock frequency				192	MHz
V_{DD}	Operation Voltage (M48xID)		1.8		3.6	V
V_{DD}	Operation Voltage (M487KMCAN)		2.7		3.6	
AV_{DD}	Analog Operation Voltage		V_{DD}			
V_{DDIO}	Power supply for PA.0 ~ 5		1.8		3.6	
V_{LDO}	LDO Output Voltage			1.26		
V_{BG}	Band-gap Voltage	V_{DD} = 1.8 V ~ 3.6 V	1.16		1.25	
C_{LDO}	LDO Output capacitance on each pin			2.2		uF
I_{RUSH}[*1]	InRush current on voltage regulator power-on (POR or wakeup from Standby)	VDD bypass CAP = 0.1uF, LDO_CAP = 2.2uF	-	617	-	mA
		VDD closed to LDO_CAP pin bypass CAP = 10uF; others VDD bypass CAP = 0.1uF, LDO_CAP = 2.2uF	-	450	-	
t_{VDD}	V_{DD} rise time rate		10	-		µs/V
	V_{DD} fall time rate	BOD Disabled, LVR Enabled[*2]	400	-		
		BOD Disabled, LVR Enabled[*3]	500			
		BOD 1.6V Enabled	80			
		BOD 3.0V Enabled	80			

Note:

1. Guaranteed by design, not tested in production
2. LVR in active mode
3. LVR in low power mode

8.3 DC Electrical Characteristics

8.3.1 Typical Current Consumption(M48xID)

- ALL GPIO pins are in push pull mode, output high.
- LDO = 1.26V
- The maximum values are obtained for V_{DD} = 3.6 V and maximum ambient temperature (T_A), and the typical values for T_A= 25 °C and V_{DD} = 3.3 V unless otherwise specified.
- $V_{DD} = AV_{DD} = V_{DDIO}$
- When the peripherals are enabled HCLK is the system clock, $f_{PCLK0, 1} = f_{HCLK}/2$.
- Program run while(1){} from Flash.

Symbol	Conditions	F_{HCLK}	HXT/LXT	HIRC/LIRC	PLL	Typ T_A = 25 °C	Unit
I_{DD}	Normal Run, executed from Flash, V_{DD} = 3.3V, all peripherals disable	192 MHz	12 MHz	-	V	34.00	mA
		160 MHz	12 MHz	-	V	28.76	
		144 MHz	12 MHz	-	V	26.00	
		120 MHz	12 MHz	-	V	22.21	
		12 MHz	12 MHz	-	-	3.49	
		192 MHz	-	12 MHz	V	33.29	
		160 MHz	-	12 MHz	V	28.11	
		144 MHz	-	12 MHz	V	25.51	
		120 MHz	-	12 MHz	V	21.59	
		12 MHz	-	12 MHz	-	2.98	
		32.768 kHz	32.768 kHz	-	-	0.57	
		10 kHz	-	10 kHz	-	0.57	
	Normal run, External clock, executed from Flash, V_{DD} = 3.3V, all peripherals enabled	192 MHz	-	12 MHz	V	70.05	
		160 MHz	-	12 MHz	V	58.99	
		144 MHz	-	12 MHz	V	53.43	
		120 MHz	-	12 MHz	V	45.04	
		12 MHz	-	12 MHz	-	5.60	
		192 MHz	12 MHz	-	V	70.70	
		160 MHz	12 MHz	-	V	60.41	
		144 MHz	12 MHz	-	V	53.75	
		120 MHz	12 MHz	-	V	46.04	
		12 MHz	12 MHz	-	-	5.85	
		32.768 kHz	32.768 kHz	-	-	0.58	
		10 kHz	-	10 kHz	-	0.57	

Table 8.3-1 Current Consumption in Normal Run Mode

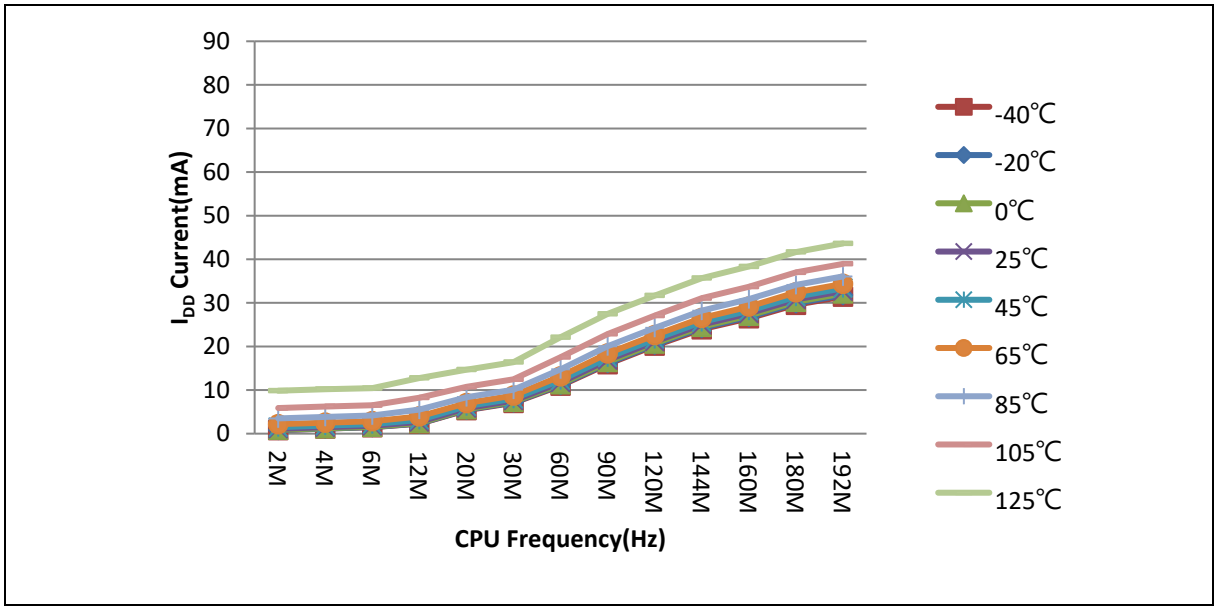

Figure 8.3-1 Current Consumption Versus Temperature in Normal Run Mode, V_{DD} = 3.3V , All Peripherals Disabled, PLL Source From HIRC

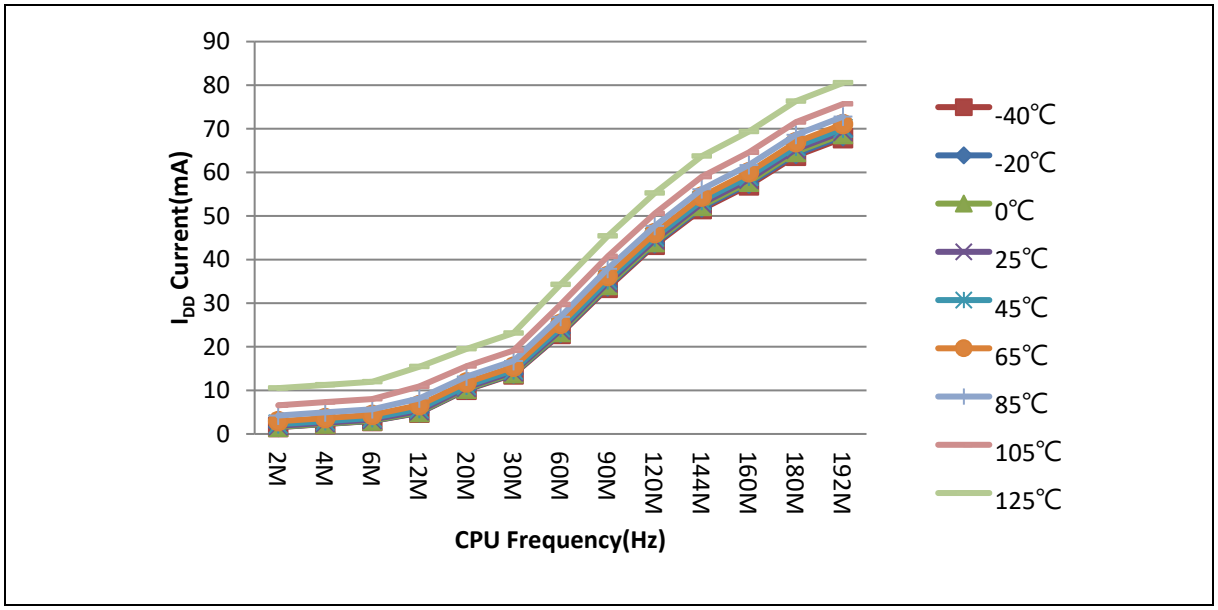

Figure 8.3-2 Current Consumption Versus Temperature in Normal Run Mode, V_{DD} = 3.3V , All Peripherals Enabled, PLL Source From HIRC

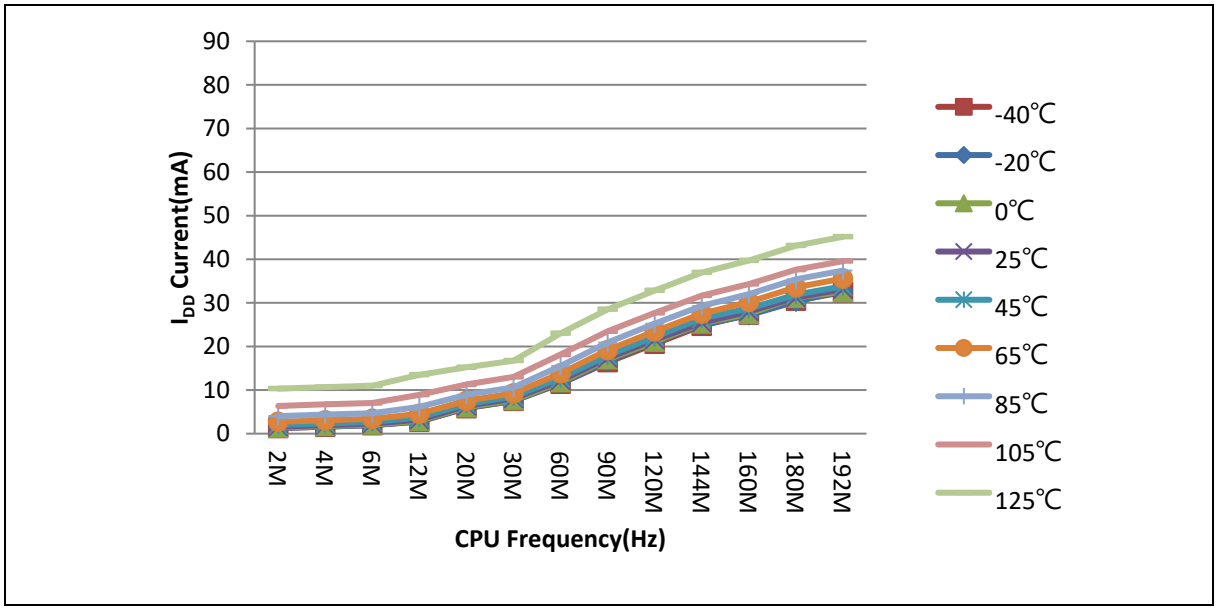

Figure 8.3-3 Current Consumption Versus Temperature in Normal Run Mode, V_{DD} = 3.3V , All Peripherals Disabled, PLL Source From HXT

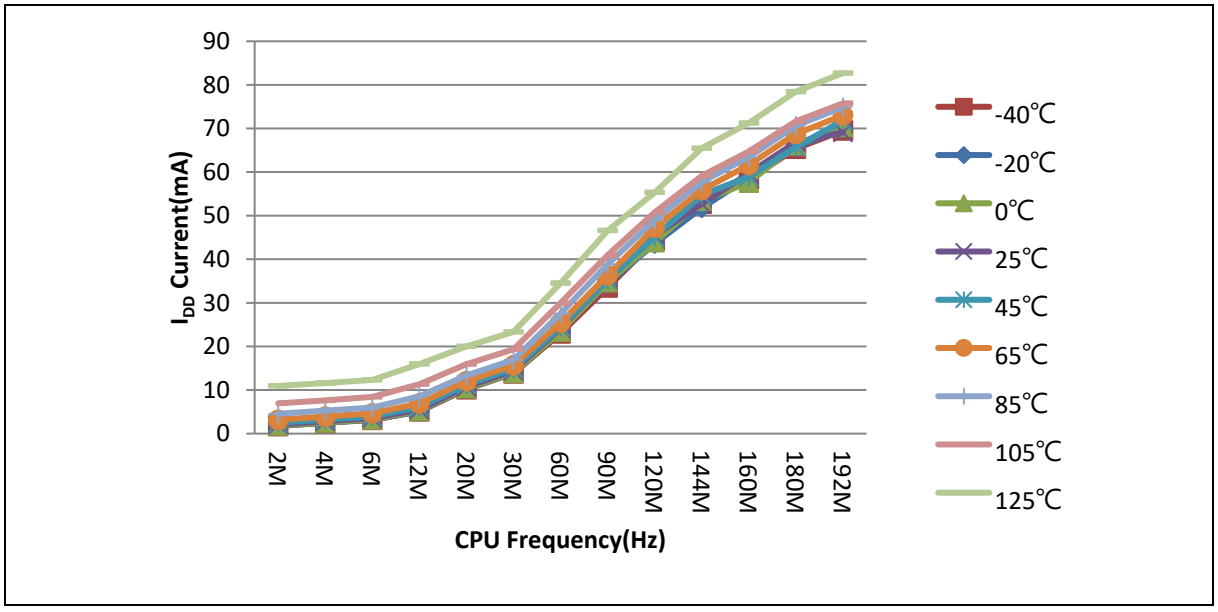

Figure 8.3-4 Current Consumption Versus Temperature in Normal Run Mode, V_{DD} = 3.3V , All Peripherals Enabled, PLL Source From HXT

Symbol	Conditions	F_{HCLK}	HXT/LXT	HIRC/LIRC	PLL	Typ	Unit
						T_A = 25 °C	
I_{DD}	Idle mode, executed from Flash, V_{DD} = 3.3V, all peripherals disable	192 MHz	12 MHz	-	V	10.32	mA
		160 MHz	12 MHz	-	V	8.95	
		144 MHz	12 MHz	-	V	8.23	
		120 MHz	12 MHz	-	V	7.23	
		12 MHz	12 MHz	-	-	1.98	
		192 MHz	-	12 MHz	V	9.76	
		160 MHz	-	12 MHz	V	8.40	
		144 MHz	-	12 MHz	V	7.72	
		120 MHz	-	12 MHz	V	6.70	
		12 MHz	-	12 MHz	-	1.47	
		32.768 kHz	32.768 kHz	-	-	0.57	
		10 kHz	-	10 kHz	-	0.57	
	Idle mode, External clock, executed from Flash, V_{DD} = 3.3V, all peripherals enabled	192 MHz	-	12 MHz	V	49.64	
		160 MHz	-	12 MHz	V	41.82	
		144 MHz	-	12 MHz	V	37.89	
		120 MHz	-	12 MHz	V	31.96	
		12 MHz	-	12 MHz	-	4.03	
		192 MHz	12 MHz	-	V	50.36	
		160 MHz	12 MHz	-	V	42.75	
		144 MHz	12 MHz	-	V	38.29	
		120 MHz	12 MHz	-	V	32.70	
		12 MHz	12 MHz	-	-	4.52	
		32.768 kHz	32.768 kHz	-	-	0.58	
		10 kHz	-	10 kHz	-	0.57	

Table 8.3-2 Current Consumption in Idle Mode

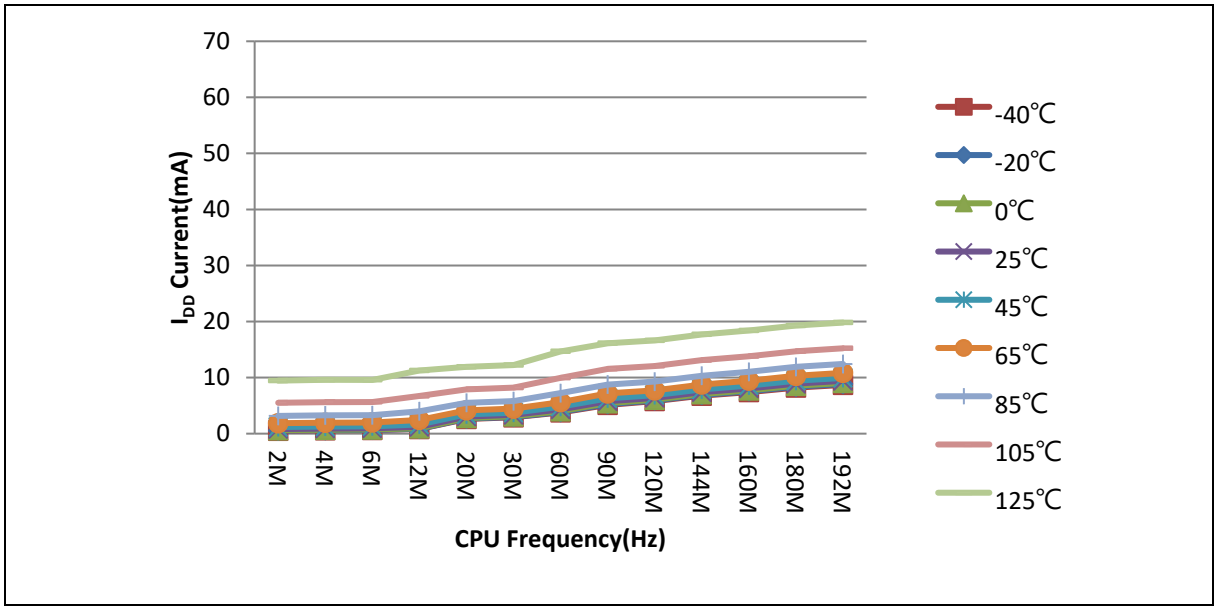

Figure 8.3-5 Current Consumption Versus Temperature in Idle Mode, V_{DD} = 3.3V , All Peripherals Disabled, PLL Source From HIRC

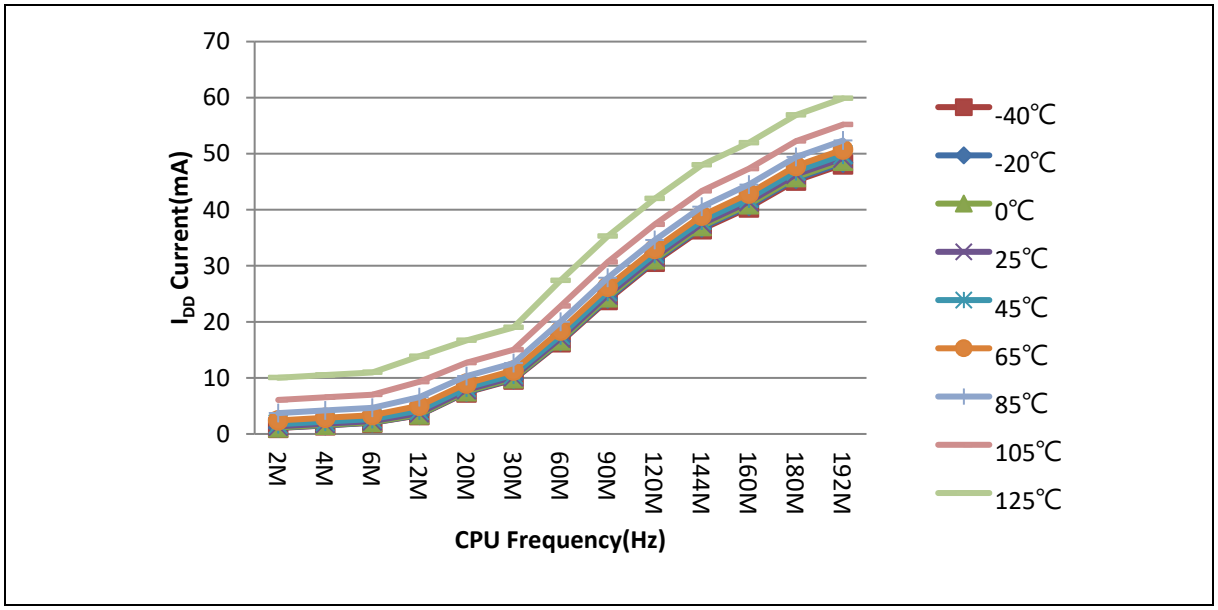

Figure 8.3-6 Current Consumption Versus Temperature in Idle Mode, V_{DD} = 3.3V , All Peripherals Enabled, PLL Source From HIRC

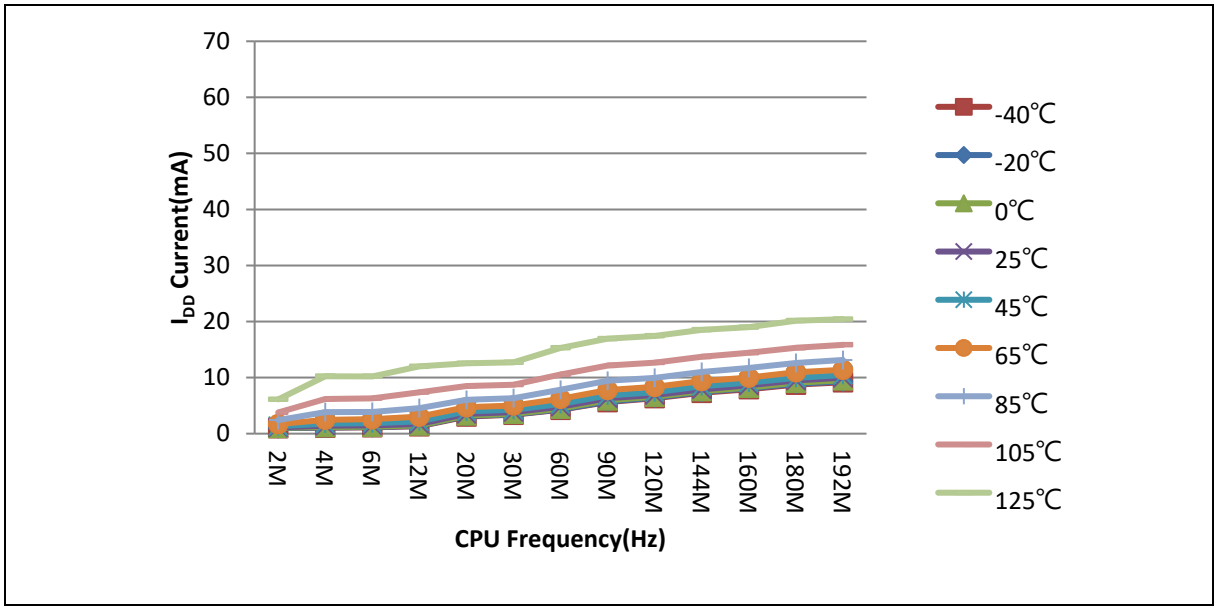

Figure 8.3-7 Current Consumption Versus Temperature in Idle Mode, V_{DD} = 3.3V , All Peripherals Disabled, PLL Source From HXT

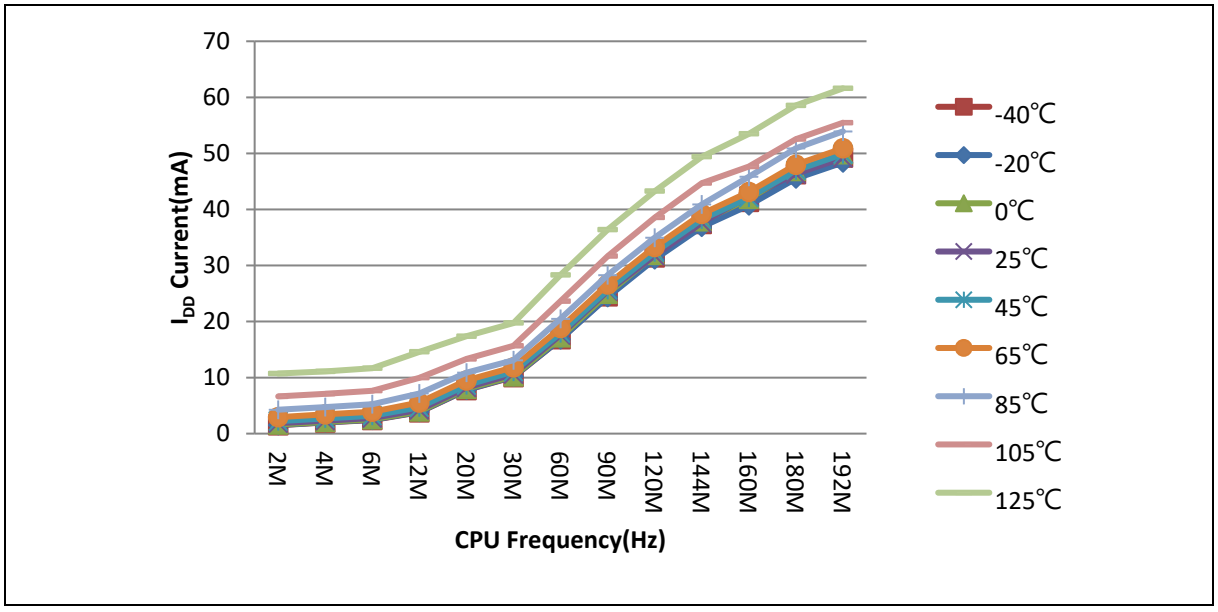

Figure 8.3-8 Current Consumption Versus Temperature in Idle Mode, V_{DD} = 3.3V , All Peripherals Enabled, PLL Source From HXT

Symbol	Conditions	LXT	LIRC	PLL	Typ	Unit
					T_A = 25 °C	
I_{DD_FWPD}	Fast wake-up Power-down mode, V_{DD} = 3.3V, all peripherals disabled	-	-	-	0.49	mA
	Fast wake-up Power-down mode, V_{DD} = 3.3V, RTC/WDT/Timer/UART enable	V	-	-	0.49	
	Fast wake-up Power-down mode, V_{DD} = 3.3V, RTC/WDT/Timer enable	-	V	-	0.49	
	Fast wake-up Power-down mode, V_{DD} = 3.3V, WDT/Timer use LIRC, RTC/UART use LXT	V	V	-	0.49	
I_{DD_PD}	Power-down mode, V_{DD} = 3.3V, all peripherals disabled	-	-	-	0.37	mA
	Power-down mode, V_{DD} = 3.3V, RTC/WDT/Timer/UART enable	V	-	-	0.37	
	Power-down mode, V_{DD} = 3.3V, RTC/WDT/Timer use LIRCT	-	V	-	0.37	
	Power-down mode, V_{DD} = 3.3V, WDT/Timer use LIRC, RTC/UART use LX	V	V	-	0.37	
I_{DD_LLPD}	Low leakage Power-down mode, V_{DD} = 3.3V, all peripherals disabled	-	-	-	0.14	mA
	Low leakage Power-down mode, V_{DD} = 3.3V, RTC/WDT/Timer/UART enable	V	-	-	0.37	
	Low leakage Power-down mode, V_{DD} = 3.3V, RTC/WDT/Timer enable	-	V	-	0.37	
	Low leakage Power-down mode, V_{DD} = 3.3V, WDT/Timer use LIRC, RTC/UART use LX	V	V	-	0.37	
I_{DD_SPD0}	Standby Power-down mode(SPD0), V_{DD} = 3.3V, all peripherals disabled	-	-	-	0.04	mA
	Standby Power-down mode(SPD0), V_{DD} = 3.3V, RTC enable	V	-	-	0.04	
	Standby Power-down mode(SPD0), V_{DD} = 3.3V, RTC enable	-	V	-	0.04	

Symbol	Conditions	LXT	LIRC	PLL	Typ	Unit
					T_A = 25 °C	
I_{DD_SPD1}	Standby Power-down mode(SPD1), V_{DD} = 3.3V, all peripherals disabled	-	-	-	0.03	mA
	Standby Power-down mode(SPD1), V_{DD} = 3.3V, RTC enable	V	-	-	0.03	
	Standby Power-down mode(SPD1), V_{DD} = 3.3V, RTC enable	-	V	-	0.03	
I_{DD_DPD}	Deep Power-down mode(DPD), V_{DD} = 3.3V, all peripherals disabled	-	-	-	0.95	uA

Note:

1. $V_{DD} = AV_{DD} = V_{DDIO}$ = 3.3V

Table 8.3-3 Chip Current Consumption in Power-down Mode

8.3.2 Typical Current Consumption(M487KMCAN)

Normal Run Mode (CPU Normal Run that executed code from SPI Flash thru SPIM)

- ALL GPIO pins are in push pull mode, output high.
- LDO = 1.26V
- The maximum values are obtained for V_{DD} = 3.6 V and maximum ambient temperature (T_A), and the typical values for T_A= 25 °C and V_{DD} = 3.3 V unless otherwise specified.
- $V_{DD} = AV_{DD} = V_{DDIO}$
- When the peripherals are enabled HCLK is the system clock, $f_{PCLK0, 1} = f_{HCLK}/2$.
- Program run while(1){} from SPI Flash.

Symbol	Conditions	F_{HCLK}	HXT/LXT	HIRC/LIRC	PLL	Typ T_A = 25 °C	Unit
I_{DD}	Normal Run, executed from SPI Flash, V_{DD} = 3.3V, all peripherals disable	192 MHz	12 MHz	-	V	50.1	mA
		160 MHz	12 MHz	-	V	42.2	
		144 MHz	12 MHz	-	V	38.3	
		120 MHz	12 MHz	-	V	33.2	
		192 MHz	-	12 MHz	V	50.1	
		160 MHz	-	12 MHz	V	42.2	
		144 MHz	-	12 MHz	V	38.3	
		120 MHz	-	12 MHz	V	33.2	
	Normal run, External clock, executed from SPI Flash, V_{DD} = 3.3V, all peripherals enabled	192 MHz	-	12 MHz	V	72.5	
		160 MHz	-	12 MHz	V	60.9	
		144 MHz	-	12 MHz	V	55.1	
		120 MHz	-	12 MHz	V	47.3	
		192 MHz	12 MHz	-	V	72.3	
		160 MHz	12 MHz	-	V	60.7	
		144 MHz	12 MHz	-	V	54.9	
		120 MHz	12 MHz	-	V	47.1	

Table 8.3-4 Current Consumption in Normal Run Mode (Cache-on)

Symbol	Conditions	F_{HCLK}	HXT/LXT	HIRC/LIRC	PLL	Typ	Unit
						T_A = 25 °C	
I_{DD}	Normal Run, executed from SPI Flash, V_{DD} = 3.3V, all peripherals disable	192 MHz	12 MHz	-	V	35.5	mA
		160 MHz	12 MHz	-	V	30.3	
		144 MHz	12 MHz	-	V	27.7	
		120 MHz	12 MHz	-	V	24.8	
		192 MHz	-	12 MHz	V	35.5	
		160 MHz	-	12 MHz	V	30.3	
		144 MHz	-	12 MHz	V	27.7	
		120 MHz	-	12 MHz	V	24.8	
	Normal run, External clock, executed from SPI Flash, V_{DD} = 3.3V, all peripherals enabled	192 MHz	-	12 MHz	V	57.7	
		160 MHz	-	12 MHz	V	48.9	
		144 MHz	-	12 MHz	V	44.4	
		120 MHz	-	12 MHz	V	38.6	
		192 MHz	12 MHz	-	V	57.4	
		160 MHz	12 MHz	-	V	48.5	
		144 MHz	12 MHz	-	V	44.1	
		120 MHz	12 MHz	-	V	38.4	

Table 8.3-5 Current Consumption in Normal Run Mode (Cache-off)

Symbol	Conditions	F_{HCLK}	HXT/LXT	HIRC/LIRC	PLL	Typ	Unit
						T_A = 25 °C	
I_{DD}	Idle mode, executed from SPI Flash, V_{DD} = 3.3V, all peripherals disable	192 MHz	12 MHz	-	V	26.7	mA
		160 MHz	12 MHz	-	V	22.6	
		144 MHz	12 MHz	-	V	20.5	
		120 MHz	12 MHz	-	V	18.4	
		192 MHz	-	12 MHz	V	26.7	
		160 MHz	-	12 MHz	V	22.6	
		144 MHz	-	12 MHz	V	20.5	
		120 MHz	-	12 MHz	V	18.4	
	Idle mode, External clock, executed from SPI Flash, V_{DD} = 3.3V, all peripherals enabled	192 MHz	-	12 MHz	V	51.7	
		160 MHz	-	12 MHz	V	43.5	
		144 MHz	-	12 MHz	V	39.4	
		120 MHz	-	12 MHz	V	34.1	
		192 MHz	12 MHz	-	V	51.3	
		160 MHz	12 MHz	-	V	43.1	
		144 MHz	12 MHz	-	V	39.0	
		120 MHz	12 MHz	-	V	33.7	

Table 8.3-6 Current Consumption in Idle Mode (Cache-on)

Idle Mode (CPU Keeps in Idle Mode that executed code from SPI Flash thru SPIM and SPI Flash enters the Standby by /CS pin = High)

Symbol	Conditions	F_{HCLK}	HXT/LXT	HIRC/LIRC	PLL	Typ	Unit
						T_A = 25 °C	
I_{DD}	Idle mode, executed from Flash, V_{DD} = 3.3V, all peripherals disable	192 MHz	12 MHz	-	V	13.98	mA
		160 MHz	12 MHz	-	V	11.98	
		144 MHz	12 MHz	-	V	10.98	
		120 MHz	12 MHz	-	V	10.43	
		192 MHz	-	12 MHz	V	13.98	
		160 MHz	-	12 MHz	V	11.98	
		144 MHz	-	12 MHz	V	10.98	
		120 MHz	-	12 MHz	V	10.44	
	Idle mode, External clock, executed from Flash, V_{DD} = 3.3V, all peripherals enabled	192 MHz	-	12 MHz	V	39.17	
		160 MHz	-	12 MHz	V	32.97	
		144 MHz	-	12 MHz	V	29.87	
		120 MHz	-	12 MHz	V	26.16	
		192 MHz	12 MHz	-	V	38.71	
		160 MHz	12 MHz	-	V	32.49	
		144 MHz	12 MHz	-	V	29.41	
		120 MHz	12 MHz	-	V	25.68	

Table 8.3-7 Current Consumption in Idle Mode (Cache-off)

Power-down Mode (CPU runs the Power-down Mode that executed code from embedded Flash after SPI Flash entered the power-down by the Power-down command (B9h))

Symbol	Conditions	LXT	LIRC	PLL	Typ T_A = 25 °C	Unit
I_{DD_FWPD}	Fast wake-up Power-down mode, V_{DD} = 3.3V, all peripherals disabled	-	-	-	0.49	mA
	Fast wake-up Power-down mode, V_{DD} = 3.3V, RTC/WDT/Timer/UART enable	V	-	-	0.49	
	Fast wake-up Power-down mode, V_{DD} = 3.3V, RTC/WDT/Timer enable	-	V	-	0.49	
	Fast wake-up Power-down mode, V_{DD} = 3.3V, WDT/Timer use LIRC, RTC/UART use LXT	V	V	-	0.49	
I_{DD_PD}	Power-down mode, V_{DD} = 3.3V, all peripherals disabled	-	-	-	0.37	mA
	Power-down mode, V_{DD} = 3.3V, RTC/WDT/Timer/UART enable	V	-	-	0.37	
	Power-down mode, V_{DD} = 3.3V, RTC/WDT/Timer use LIRCT	-	V	-	0.37	
	Power-down mode, V_{DD} = 3.3V, WDT/Timer use LIRC, RTC/UART use LX	V	V	-	0.37	
I_{DD_LLPD}	Low leakage Power-down mode, V_{DD} = 3.3V, all peripherals disabled	-	-	-	0.14	mA
	Low leakage Power-down mode, V_{DD} = 3.3V, RTC/WDT/Timer/UART enable	V	-	-	0.37	
	Low leakage Power-down mode, V_{DD} = 3.3V, RTC/WDT/Timer enable	-	V	-	0.37	
	Low leakage Power-down mode, V_{DD} = 3.3V, WDT/Timer use LIRC, RTC/UART use LX	V	V	-	0.37	
I_{DD_SPD0}	Standby Power-down mode(SPD0), V_{DD} = 3.3V, all peripherals disabled	-	-	-	0.04	mA
	Standby Power-down mode(SPD0), V_{DD} = 3.3V, RTC enable	V	-	-	0.04	
	Standby Power-down mode(SPD0), V_{DD} = 3.3V, RTC enable	-	V	-	0.04	

Symbol	Conditions	LXT	LIRC	PLL	Typ	Unit
					T_A = 25 °C	
I_{DD_SPD1}	Standby Power-down mode(SPD1), V_{DD} = 3.3V, all peripherals disabled	-	-	-	0.04	mA
	Standby Power-down mode(SPD1), V_{DD} = 3.3V, RTC enable	V	-	-	0.04	
	Standby Power-down mode(SPD1), V_{DD} = 3.3V, RTC enable	-	V	-	0.04	

Note:

1. $V_{DD} = AV_{DD} = V_{DDIO}$ = 3.3V

Table 8.3-8 Chip Current Consumption in Power-down Mode

8.3.3 On-chip Peripheral Current Consumption

- ALL GPIO pins are in push pull mode, output high.
- LDO = 1.26V
- The typical values for TA= 25 ˚C and V_{DD} = AV_{DD} = 3.3 V unless otherwise specified.
- When the peripherals are enabled HCLK is the system clock, f_{HCLK} = 192 MHz, $f_{PCLK0, 1}$ = f_{HCLK}/2.

Peripheral	I_{DD}	Unit
DAC	58.4	uA
ADC	338.6	
ACMP01	85.2	
OPA	123.3	
QEI0	74.2	
QEI1	81.9	
ECAP0	74.3	
ECAP1	69.8	
EPWM0	907	
EPWM1	896.5	
BPWM0	263.8	
BPWM1	245.2	
WDT	49.6	
SD0	1416.1	
SD1	1263.6	
SC0	66.6	
SC1	76.6	
SC2	73.6	
I^2S0	102.1	
SPIM	14681.1	
QSPI0	291.1	
SPI0	315.5	
SPI1	261.2	
SPI2	137.2	
SPI3	138.7	
UART0	150.6	
UART1	209.1	
UART2	220.0	

Peripheral	I_{DD}	Unit
UART3	160.5	
UART4	186.5	
UART5	177.5	
I^2C0	34.4	
I^2C1	26.6	
I^2C2	32.7	
CAN0	280.5	
CAN1	257.6	
USCI0	211.9	
USCI1	205.4	
EBI	209.6	
TMR0	140.5	
TMR1	130.1	
TMR2	127.1	
TMR3	121.2	
USB HS OTG	248.7	
USB FS OTG	503.1	
Crypto	1550.4	
EMAC	1768.1	

Note:

1. Guaranteed by characterization results, not tested in production.

8.3.4 Wakeup Time

- The wakeup times given in Table 8.3-9 is measured on a wakeup phase with a 12 MHz HIRC oscillator. The clock source used to wake up the device depends from the current operating mode:
  - Fast-wakeup, power down, low leakage Power-down mode: the clock source is the RC oscillator
  - Standby and Deep Power-down mode: the clock source is the clock that was set before entering Sleep mode.
- The wakeup times are measured from the wakeup event to the point in which the application code reads the first instruction.
- The clock source is the RC oscillator from HIRC

Symbol	Parameter	Typ	Unit
t_{WU_IDLE}	Wakeup from IDLE mode	5 Cycles	µs
t_{WU_FWPD}	Wakeup from Fast-wakeup power down mode	6	
t_{WU_NPD}	Wakeup from normal power down mode	12	
t_{WU_LLPD}	Wakeup from low leakage power down mode	54	
t_{WU_SPD0}	Wakeup from Standby Power-down mode 0 (SPD0)	527	
t_{WU_SPD1}	Wakeup from Standby Power-down mode 1 (SPD1)	527	
t_{WU_DPD}	Deep Power-down mode (DPD)	489	

Table 8.3-9 Low-power Mode Wakeup Timings

8.3.5 PIN DC Characteristics

Symbol	Parameter	Min.	Typ.	Max.	Unit	Test Conditions
V_{IL1}	Input Low Voltage (TTL input)			0.8	V	$V_{DD} = V_{DDIO} = 3.6$ V
				0.56	V	$V_{DD} = V_{DDIO} = 1.8$ V
V_{IH1}	Input High Voltage (TTL input)	2			V	$V_{DD} = V_{DDIO} = 3.6$V
		1.04			V	$V_{DD} = V_{DDIO} = 1.8$V
V_{IL2}	Input Low Voltage (Schmitt input)			$0.3*V_{DD}$	V	$V_{DD} = V_{DDIO} = 3.6$V
				$0.3*V_{DD}$		$V_{DD} = V_{DDIO} = 1.8$V
V_{IH2}	Input High Voltage (Schmitt input)	$0.7*V_{DD}$			V	$V_{DD} = V_{DDIO} = 3.6$V
		$0.7*V_{DD}$				$V_{DD} = V_{DDIO} = 1.8$V
V_{HY}	Hysteresis voltage of (Schmitt input)		$0.2V_{DD}$		V	
I_{LK}	Input Leakage Current	-1		1	μA	$V_{DD} = V_{DDIO} = 3.6$V, $0 < V_{IN} < V_{DD,}$ Open-drain or input only mode
R_{PU}	Input Pull Up Resistor		50		KΩ	$V_{DD} = V_{DDIO} = 3.3$V
			52		KΩ	$V_{DD} = V_{DDIO} = 1.8$V
R_{PD}	Input Pull down Resistor		50		KΩ	$V_{DD} = V_{DDIO} = 3.3$V
			52		KΩ	$V_{DD} = V_{DDIO} = 1.8$V

Table 8.3-10 PIN Input Characteristics

Symbol	Parameter	Min.	Typ.	Max.	Unit	Test Conditions
I_{SR4}	Source Current		-18		mA	$V_{DD} = V_{DDIO} = 3.3$V
I_{SR5}	(Push-pull Mode, Set GPIO to output HIGH, Apply GPIO pin $V_{IN}=(V_{DD}-0.4)$V for V_{DD} and measure the source current)		-10		mA	$V_{DD} = V_{DDIO} = 1.8$V
I_{SK1}	Sink Current		17		mA	$V_{DD} = V_{DDIO} = 3.3$V
I_{SK2}	(Push-pull Mode, Set GPIO to output LOW, Apply GPIO pin $V_{IN}=(V_{SS}+0.4)$V for V_{SS} and measure the source current)		10		mA	$V_{DD} = V_{DDIO} = 1.8$V
C_{IO}	I/O pin capacitance		5		pF	

Table 8.3-11 PIN Output Characteristics

Symbol	Parameter	Min.	Typ.	Max.	Unit	Test Conditions
V_{ILR}	Negative going threshold (Schmitt input), nRESET			$0.3*V_{DD}$	V	V_{DD} = 3.3V
V_{IHR}	Positive going threshold (Schmitt Input), nRESET	$0.7*V_{DD}$			V	V_{DD} = 3.3V
R_{RST}	Internal nRESET pin pull up resistor		50		KΩ	
t_{FR1}	nRESET input filtered time		32		uS	
t_{FR2}	nRESET input filtered time under SPD and DPD mode		300		nS	V_{DD} = 3.3V,

Table 8.3-12 nRESET PIN Characteristics

8.4 AC Electrical Characteristics

8.4.1 External 4~24 MHz High Speed Crystal (HXT) Characteristics

- T_A= 25 ˚C and V_{DD} = 3.3 V unless otherwise specified.

Sym.	Parameter	Specifications				Test Condition
		Min.	Typ.	Max.	Unit	
V_{DD}	Operating Voltage	1.8		3.6	V	
R_f	Feedback resister		1000		kΩ	
f_{HXT}	Oscillator frequency	4		24	MHz	V_{DD} = 1.8 ~ 3.6V
T_{HXT}	Temperature Range	-40		105	°C	
I_{HXT_INV}	Current Consumption (INV-type Crystal)		650		µA	4 MHz
			1600			12 MHz
			2000			16 MHz
			4000			24 MHz
I_{HXT_GM}	Current Consumption (GM-type Crystal)		160		µA	4 MHz
			280			12 MHz
			400			16 MHz
			600			24 MHz
T_{S_GM}	Stable time (GM-type)	1545		1752	µs	4 MHz, -40 ˚C
		1630		1757		4 MHz, 25 ˚C
		1054		1988		4 MHz, 105 ˚C
		484		512		12 MHz, -40 ˚C
		484		544		12 MHz, 25 ˚C
		386		606		12 MHz, 105 ˚C
		349		375		16 MHz, -40 ˚C
		337		399		16 MHz, 25 ˚C
		281		444		16 MHz, 105 ˚C
		259		303		24 MHz, -40 ˚C
		248		330		24 MHz, 25 ˚C
		210		403		24 MHz, 105 ˚C

Sym.	Parameter	Specifications				Test Condition
		Min.	Typ.	Max.	Unit	
T_{S_INV}	Stable time (INV-type)	1490		23432	µs	4 MHz, -40 ˚C
		1479		2352		4 MHz, 25 ˚C
		1052		2105		4 MHz, 105 ˚C
		464		558		12 MHz, -40 ˚C
		481		554		12 MHz, 25 ˚C
		417		663		12 MHz, 105 ˚C
		317		420		16 MHz, -40 ˚C
		326		407		16 MHz, 25 ˚C
		290		472		16 MHz, 105 ˚C
		226		382		24 MHz, -40 ˚C
		228		388		24 MHz, 25 ˚C
		210		441		24 MHz, 105 ˚C
	Clock Duty	45	50	55	%	

Note:

1. Guaranteed by characterization, not tested in production.
2. Recommended crystal resonators for the HXT oscillator in M480 Series MCUs
   2.1 EPSON FA-238A 12MHz (C_L=12pF, ESR= 120 Ω), X1E000341000400
   2.2 EPSON FA-238A 16MHz (C_L=12pF, ESR= 80 Ω), X1E000341003900
   2.3 EPSON FA-238A 24MHz (C_L=12pF, ESR= 60 Ω), X1E000341014800

Table 8.4-1 External 4~24 MHz High Speed Crystal (HXT) Oscillator

8.4.1.1 Typical Crystal Application Circuits

Crystal	C1	C2	R
4 MHz ~ 24 MHz	20pF	20pF	without

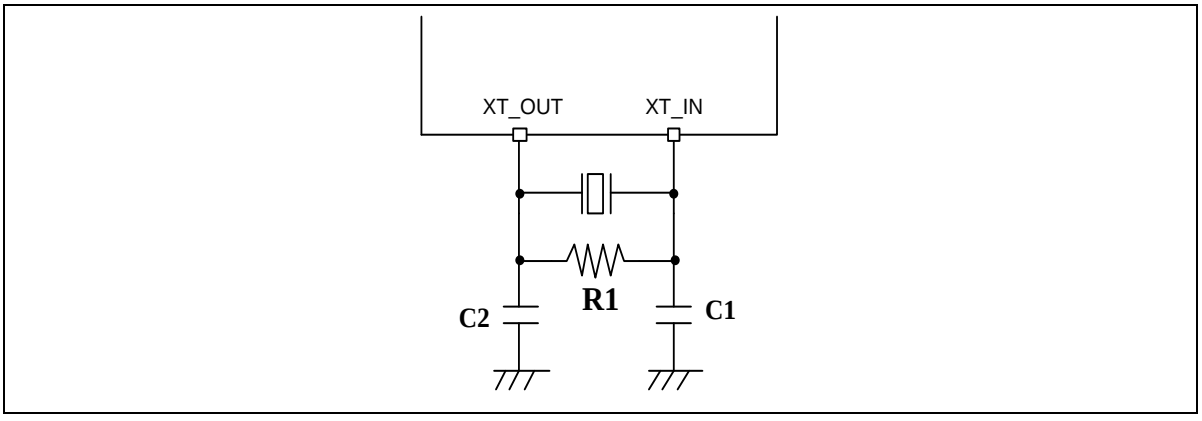

Figure 8.4-1 Typical Crystal Application Circuit

8.4.2 External 4~24 MHz High Speed Clock Input (OSC) Characteristics

Sym.	Parameter	Specifications				Test Condition
		Min.	Typ.	Max.	Unit	
t_{CHCX}	Clock High Time	18			nS	
t_{CLCX}	Clock Low Time	18			nS	
t_{CLCH}	Clock Rise Time			10	nS	
t_{CHCL}	Clock Fall Time			10	nS	
V_{IH}	Input High Voltage	0.7*V_{DD}			V	
V_{IL}	Input Low Voltage			0.3*V_{DD}	V	

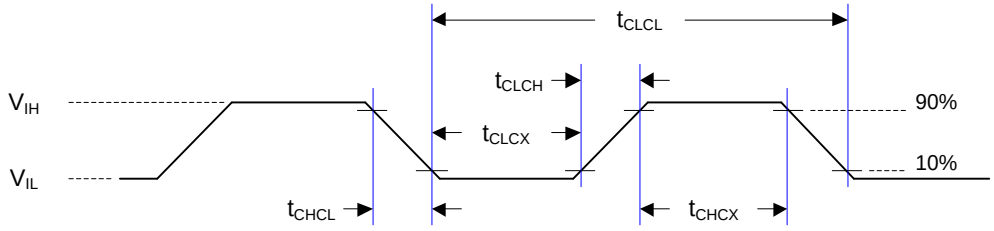

Note:

1. Guaranteed by design, not tested in production
2. Duty cycle is 50%.

8.4.3 External 32.768 kHz Low Speed Crystal (LXT) Characteristics

Sym.	Parameter	Specifications				Test Condition
		Min.	Typ.	Max.	Unit	
V_{DD}	Operation Voltage	1.8		3.6	V	
f_{LXT}	Oscillator frequency		32.768		kHz	V_{DD} = 1.8 ~ 3.6 V
T_{LXT}	Temperature	-40		105	°C	
I_{LXT}	Operating current			0.5	µA	V_{DD} = 3.3V
	Duty cycle	45		55	%	
T_S	Stable Time			500	ms	

Note:

1. Guaranteed by characterization, not tested in production.
2. Recommended crystal resonators for the LXT oscillator in M480 Series MCUs
   2.1 EPSON FC-13A 32.768 kHz (C_L= 12.5pF, ESR=70 kΩ), X1A000091000100

Table 8.4-2 External 32.768 kHz Crystal

8.4.3.1 Typical Crystal Application Circuits

Crystal	C1	C2	R1
32.768 kHz	20pF	20pF	without

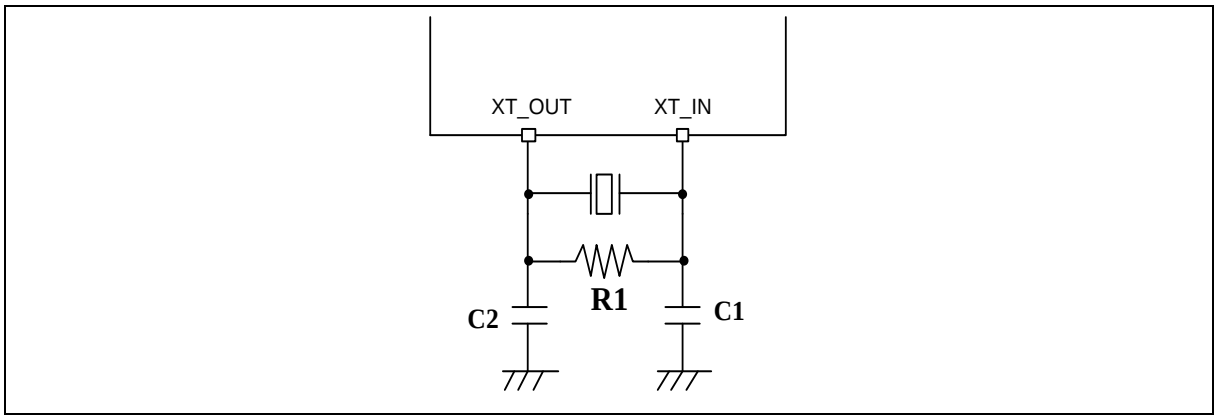

Figure 8.4-2 Typical Crystal Application Circuit

8.4.4 External 32.768 kHz Low Speed Clock Input (OSC) Characteristics

Parameter	Sym.	Specifications				Test Condition
		Min.	Typ.	Max.	Unit	
Clock High Time	t_{CHCX}	450	-	-	nS	
Clock Low Time	t_{CLCX}	450	-	-	nS	
Clock Rise Time	t_{CLCH}		-	50	nS	
Clock Fall Time	t_{CHCL}		-	50	nS	
LXT Input Pin Input High Voltage	Xin_VIH	$0.7*V_{DD}$			V	
LXT Input Pin Input Low Voltage	Xin_VIL			$0.3*V_{DD}$	V	

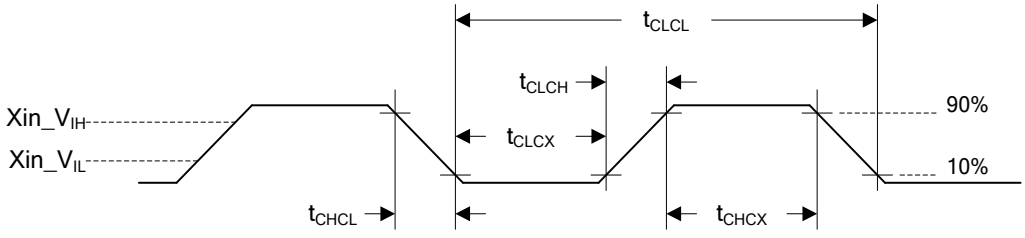

Note: *Duty cycle is 50%.*

8.4.5 12 MHz Internal High Speed RC Oscillator (HIRC)

Sym.	Parameter	Specifications				Test Condition
		Min.	Typ.	Max.	Unit	
V_{HRC}	Supply voltage	1.8		3.6	V	
f_{HRC}	Center Frequency		12		MHz	
	Internal Oscillator Frequency[*1]	-1		1	%	T_A = 25 °C, V_{DD} = 3.3V
		-3		3	%	-40°C ~ +105 °C, V_{DD} = 1.8 ~ 3.6V
I_{HRC}	Operating current		155		μA	
T_S	Stable time			4	us	

Note:
1. Guaranteed by characterization, not tested in production

8.4.6 10 kHz Internal Low Speed RC Oscillator (LIRC)

Sym.	Parameter	Specifications				Test Condition
		Min.	Typ.	Max.	Unit	
V_{LRC}	Supply voltage	1.8		3.6	V	
F_{LRC}	Oscillator Frequency[*1]	5		20	kHz	V_{DD}=1.8V~3.6V, T_A=-40~105°C
I_{LRC}	Operating current			0.5	μA	V_{DD} = 3.3V
T_S	Stable time		200		μs	

Note:
1. Guaranteed by characterization, not tested in production

8.4.7 PLL Characteristics

Symbol	Parameter	Conditions	Min	Typ	Max	Unit
f_{PLL_IN}	PLL input clock		4		24	MHz
f_{PLL_OUT}	PLL multiplier output clock		50		480	MHz
T_S	PLL stable time[*1]		100		200	μs
Jitter	Cycle-to-cycle Jitter[*2]	Peak to peak @ 480M		250		ps
I_{DD}	Power consumption	V_{DD}=3.3V@500 MHz			3	mA

Note:
1. Guaranteed by characterization, not tested in production

8.4.8 PIN AC Characteristics

- C_L = 51 pF

Px_SLEWCTL	Symbol	Parameter	Conditions	Typ	Unit
00	$t_{f(IO)out}$	Output high to low level fall time (90~10%)	V_{DD} = 3.6 V	4.384	ns
			V_{DD} = 1.8 V	8.532	
	$t_{r(IO)out}$	output low to high level rise time (10~90%)	V_{DD} = 3.6 V	4.086	
			V_{DD} = 1.8 V	8.225	
01	$t_{f(IO)out}$	Output high to low level fall time (90~10%)	V_{DD} = 3.6 V	3.005	
			V_{DD} = 1.8 V	6.153	
	$t_{r(IO)out}$	output low to high level rise time (10~90%)	V_{DD} = 3.6 V	3.404	
			V_{DD} = 1.8 V	6.29	
10	$t_{f(IO)out}$	Output high to low level fall time (90~10%)	V_{DD} = 3.6 V	3.054	
			V_{DD} = 1.8 V	6.152	
	$t_{r(IO)out}$	output low to high level rise time (10~90%)	V_{DD} = 3.6 V	3.389	
			V_{DD} = 1.8 V	6.269	

Table 8.4-3 I/O AC Characteristics

8.5 Analog Electrical Characteristics

8.5.1 LDO

Symbol	Parameter	Min	Typ	Max	Unit	Test Condition
V_{DD}	DC Power Supply	1.8		3.6	V	
V_{LDO}	Output Voltage		1.26		V	
T_A	Temperature	-40		105	°C	

Note:

1. It is recommended a 0.1μF bypass capacitor is connected between V_{DD} and the closest VSS pin of the device.
2. For ensuring power stability, a 2.2μF capacitor must be connected between LDO_CAP pin and the closest VSS pin of the device.

8.5.2 Low-Voltage Reset

Symbol	Parameter	Min	Typ	Max	Unit	Test Condition
AV_{DD}	Supply Voltage	0		3.6	V	
T_A	Temperature	-40		105	°C	-
I_{LVR}	Operating Current		0.5		uA	AV_{DD} = 3.6V
V_{LVR}	Threshold Voltage	1.40	1.48	1.56	V	T_A = 105 ° C
		1.40	1.48	1.56	V	T_A = 25 ° C
		1.40	1.48	1.56	V	T_A = -40 ° C

8.5.3 Brown-out Detector

Symbol	Parameter	Min	Typ	Max	Unit	Test Condition
AV_{DD}	Supply Voltage	0		3.6	V	-
T_A	Temperature	-40		105	˚C	-
I_{BOD}	Operating Current		66		uA	AV_{DD} = 3.6V
V_{BOD_F}	Brown-out Voltage (Falling edge)	2.9	3.0	3.1	V	BODVL [2:0] = 111
		2.7	2.8	2.9	V	BODVL [2:0] = 110
		2.5	2.6	2.7	V	BODVL [2:0] = 101
		2.3	2.4	2.5	V	BODVL [2:0] = 100
		2.1	2.2	2.3	V	BODVL [2:0] = 011
		1.9	2.0	2.1	V	BODVL [2:0] = 010
		1.7	1.8	1.9	V	BODVL [2:0] = 001
		1.5	1.6	1.7	V	BODVL [2:0] = 000
V_{BOD_R}	Brown-out Voltage (Rising edge)	3.0	3.1	3.2	V	BODVL [2:0] = 111
		2.8	2.9	3.0	V	BODVL [2:0] = 110
		2.6	2.7	2.8	V	BODVL [2:0] = 101
		2.4	2.5	2.6	V	BODVL [2:0] = 100
		2.2	2.3	2.4	V	BODVL [2:0] = 011
		2.0	2.1	2.2	V	BODVL [2:0] = 010
		1.8	1.9	2.0	V	BODVL [2:0] = 001
		1.6	1.7	1.8	V	BODVL [2:0] = 000
T_{BOD_RE}	Respond Time		1		ms	Respond Time

8.5.4 Power-on Reset

Symbol	Parameter	Min	Typ	Max	Unit	Test Condition
T_A	Temperature	-40	-	+105	˚C	-
V_{POR}	Reset Voltage		1.47		V	-
RRV_{DD}	V_{DD} Raising Rate to Ensure Power-on Reset[*1]	10			us/V	
FRV_{DD}	V_{DD} Falling Rate to Ensure Power-on Reset[*1]	320			us/V	

Note:
1. Guaranteed by characterization, not tested in production

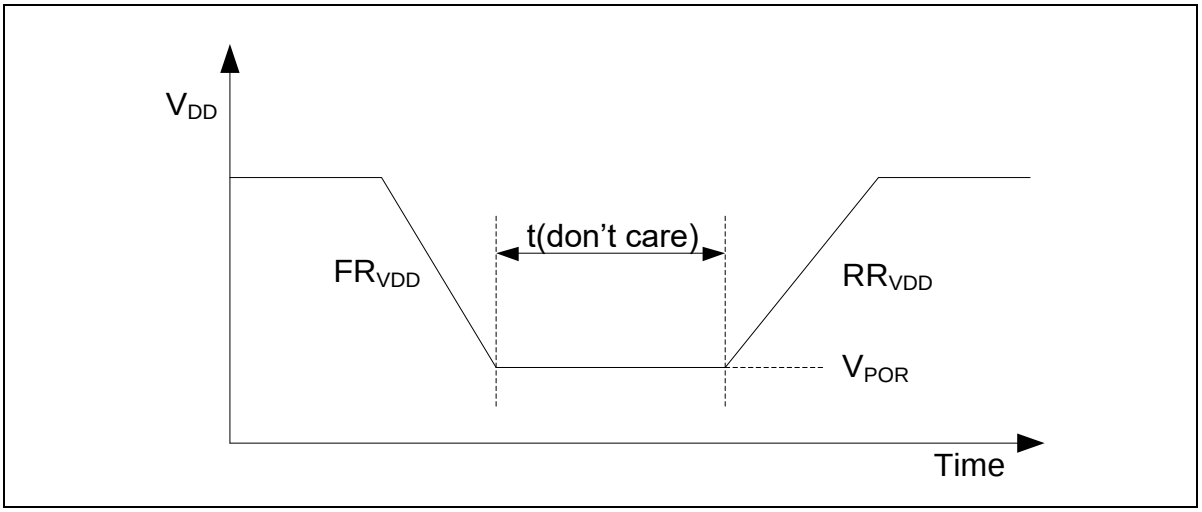

Figure 8.5-1 Power-up Ramp Condition

8.5.5 Internal Voltage Reference

- The maximum values are obtained for V_{DD} = 3.6 V and maximum ambient temperature (T_A), and the typical values for T_A= 25 ˚C and V_{DD} = 3.3 V unless otherwise specified.

Symbol	Parameter	Min	Typ	Max	Unit	Comments
V_{REF_INT}	Internal reference voltage		1.6		V	
			2.0			
			2.5			
			3.0			
AV_{DD_min}	AV_{DD} minimum voltage	2			V	V_{REF_OUT} = 1.6 v
		2.2				V_{REF_OUT} = 2.0 v
		2.7				V_{REF_OUT} = 2.5 v
		3.2				V_{REF_OUT} = 3.0 v
T_s	Stable time		0.7	2	ms	C_L =4.7 uF, V_{REF} initial=0
			35	48	us	C_L =0.1 uF, V_{REF} initial=0

Note:
1. Guaranteed by characterization, not tested in production

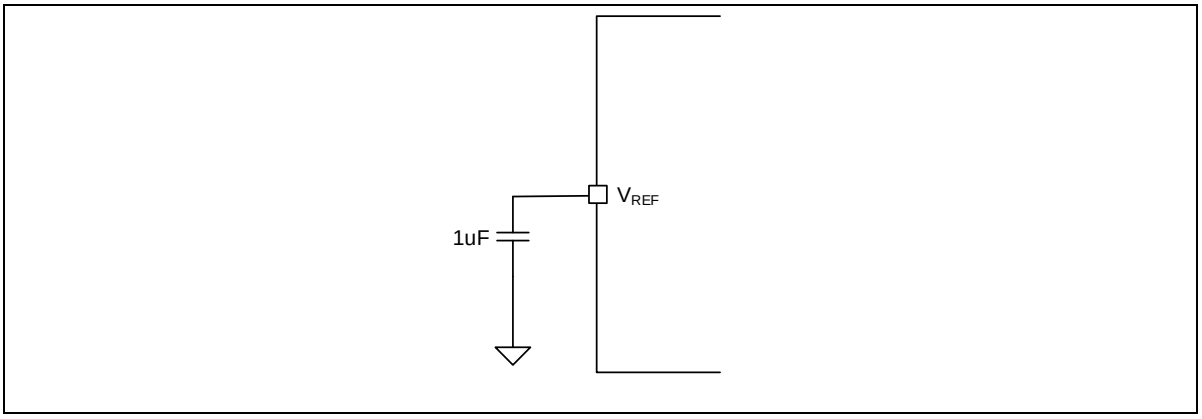

Figure 8.5-2 Typical Connection with Internal Voltage Reference

8.5.6 12-bit ADC

Fast Speed Channel

Sym.	Parameter	Specifications				Test Condition
		Min.	Typ.	Max.	Unit	
AV_{DD}	Operating voltage	1.8		3.6	V	$AV_{DD} = V_{DD}$
V_{REF}	Reference voltage	1.6		AV_{DD}	V	
T_A	Temperature	-40		105	˚C	
I_{ADC}	Operating current (AV_{DD} current) (Enable ADC and disable all other analog modules)	478		523	uA	$AV_{DD} = V_{DD} = V_{REF}$ = 3.3V ADC Clock Rate = 70 MHz High speed channel
	Resolution			12	Bit	
V_{IN}	ADC channel input voltage	0		V_{REF}	V	
F_{ADC}	ADC Clock frequency	0.14		70	MHz	High speed channel
T_{SMP}	Sampling Time		2		$1/F_{ADC}$	
T_{CONV}	Conversion time		14		$1/F_{ADC}$	$T_{CONV} = T_{SMP} + 12$
F_{SPS}	Sampling Rate (F_{ADC}/T_{CONV})			5	MSPS	High speed channel
T_{PU}	Power-up time	20			μs	
INL	Integral Non-Linearity Error	-4.29		-3.71	LSB	$V_{REF} = AV_{DD}$
DNL	Differential Non-Linearity Error	3.25		3.28	LSB	$V_{REF} = AV_{DD}$
E_G	Gain error	2.25		2.31	LSB	$V_{REF} = AV_{DD}$
E_{OFFSET}	Offset error	1.56		2.87	LSB	$V_{REF} = AV_{DD}$
E_A	Absolute Error	4.5		4.94	LSB	$V_{REF} = AV_{DD}$
C_{IN}	Internal Capacitance[*1]		5		pF	
-	Monotonic	Guaranteed			-	

Low Speed Channel

Sym.	Parameter	Specifications				Test Condition
		Min.	Typ.	Max.	Unit	
AV_{DD}	Operating voltage	1.8		3.6	V	$AV_{DD} = V_{DD}$
V_{REF}	Reference voltage		AV_{DD}		V	
T_A	Temperature	-40		105	°C	
I_{ADC1}	Operating current (AV_{DD} current) (Enable ADC and disable all other analog modules)	210		231	uA	$AV_{DD} = V_{DD} = V_{REF}$ = 3.3V ADC Clock Rate = 28 MHz low speed channel
		131		142		$AV_{DD} = V_{DD} = V_{REF}$ = 1.8V ADC Clock Rate = 28 MHz low speed channel
I_{ADC2}		111		123	uA	$AV_{DD} = V_{DD} = V_{REF}$ = 3.3V ADC Clock Rate = 14 MHz low speed channel
		70		78		$AV_{DD} = V_{DD} = V_{REF}$ = 1.8V ADC Clock Rate = 14 MHz low speed channel
	Resolution			12	Bit	
V_{IN}	ADC channel input voltage	0		V_{REF}	V	
F_{ADC}	ADC Clock frequency	0.14		70	MHz	Low speed channel
T_{SMP}	Sampling Time		2		$1/F_{ADC}$	
T_{CONV}	Conversion time		14		$1/F_{ADC}$	$T_{CONV} = T_{SMP} + 12$
F_{SPS}	Sampling Rate (F_{ADC}/T_{CONV})			2	MSPS	Low speed channel **Note:** it needs more extend sampling time to slow down the sampling rate.
T_{PU}	Power-up time	20			μs	
INL	Integral Non-Linearity Error	-2.94		-1.32	LSB	$V_{REF} = AV_{DD}$
DNL	Differential Non-Linearity Error	1.25		2	LSB	$V_{REF} = AV_{DD}$
E_G	Gain error	2.5		3.12	LSB	$V_{REF} = AV_{DD}$
E_{OFFSET}	Offset error	2.44		3.69	LSB	$V_{REF} = AV_{DD}$
E_A	Absolute Error	4.69		6.75	LSB	$V_{REF} = AV_{DD}$
C_{IN}	Internal Capacitance[*1]		5		pF	
-	Monotonic	Guaranteed			-	

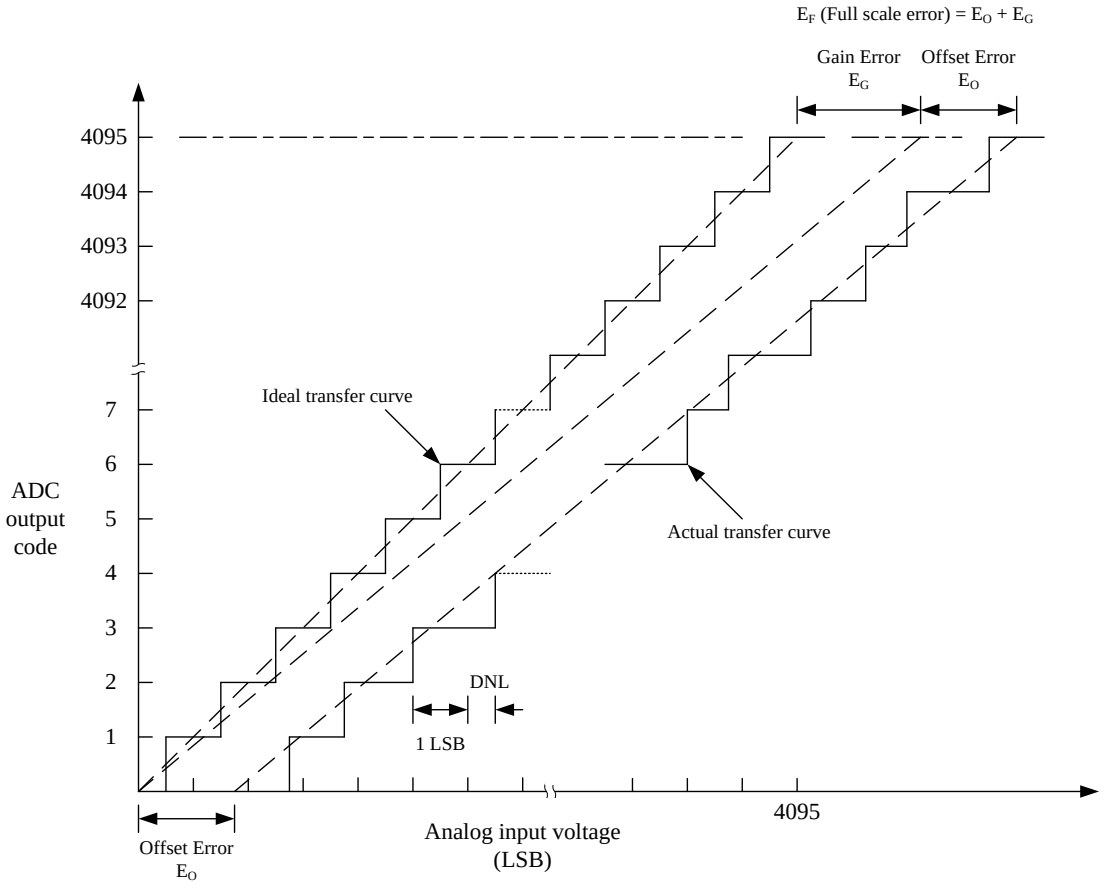

Note: The INL is the peak difference between the transition point of the steps of the calibrated transfer curve and the ideal transfer curve. A calibrated transfer curve means it has calibrated the offset and gain error from the actual transfer curve.

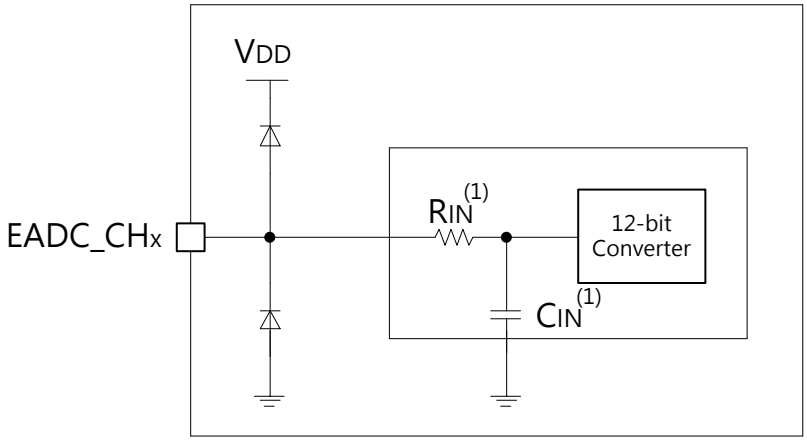

Note: GND < EADC_CHx < V_{REF}

Refer to ADC spec for the values of R_{IN}, C_{IN}

8.5.7 Temperature Sensor

Symbol	Parameter	Min	Typ	Max	Unit
V_{DD}	Operating Voltage	1.8		3.6	V
T_A	Temperature Range	-40		105	°C
I_{TEMP}	Current Consumption [*3]		16		µA
T_c	Temperature Coefficient [*3]	-1.77	-1.82	-1.84	mV/°C
V_{os}	Offset Voltage when T_A = 0°C [*3]	710.2		716.8	mV
t_S	Stable time[*2]		1		µs
T_{S_temp}	ADC sampling time when reading the temperature (5pF cap load) [*1]		3		µs

Note:

1. V_{TEMP} (mV) = T_c (mV/°C) x Temperature (°C) + V_{os} (mV)
2. Guaranteed by design, not tested in production
3. Guaranteed by characteristic, not tested in production

8.5.8 Digital to Analog Converter (DAC)

Symbol	Parameter	Min	Typ	Max	Unit	Test Condition
AV_{DD}	Analog supply voltage	1.8	-	3.6	V	-
N_R	Resolution		12		bit	-
V_{REF}	Reference supply voltage	1.5	-	AV_{DD}	V	$V_{REF} \leq AV_{DD}$
DNL	Differential non-linearity error[*4]	-	-	±2	LSB	12-bit mode
		-	-	±0.5	LSB	8-bit mode
INL	Integral non-linearity error[*4]	-	-	±4	LSB	12-bit mode
		-	-	±1	LSB	8-bit mode
OE	Offset Error[*4]	-	-	±30	LSB	12-bit mode DACOUT buffer ON
		-	-	±4	LSB	12-bit mode DACOUT buffer OFF
		-	-	±2	LSB	8-bit mode
GE	Gain Error[*4]	-	-	±5	LSB	12-bit mode DACOUT buffer ON
		-	-	±4	LSB	12-bit mode DACOUT buffer OFF
		-	-	±2	LSB	8-bit mode
AE	Absolute Error[*4]	-	-	±8	LSB	12-bit mode DACOUT buffer ON
		-	-	±4	LSB	12-bit mode DACOUT buffer OFF
		-	-	±2	LSB	8-bit mode
-	Monotonic		10-bit guaranteed		-	-
V_O	Output Voltage	0.2		AV_{DD} - 0.2	V	DACOUT buffer ON
R_{LOAD}	Resistive load[*2]	7.5	-	-	kΩ	DACOUT buffer ON
Ro	Output impedance[*4]		10	12	kΩ	DACOUT buffer OFF
C_{LOAD}	Capacitive load[*3]	-	-	50	pF	-
I_{AVDD}	Current consumption on AV_{DD} supply[*4]	-	-	180	μA	AV_{DD} = 3.6V, no load, lowest code (0x000)
		-	-	420		AV_{DD} = 3.6V, no load, middle code (0x800)

Symbol	Parameter	Min	Typ	Max	Unit	Test Condition
I_{REF}	Current consumption on V_{REF} supply[*4]	-	150	240	μA	V_{REF} =3.6V, no load, middle code (0x800)
T_S	Settling Time	-	5	6	μs	Full scale: for a 12-bit input code transition between the lowest and the highest input codes when DAC_OUT reaches final value +/-1 LSB, $C_{LOAD} \leq 50pF$, $R_{LOAD} \geq 7.5k\Omega$
F_s	Update Rate	-	-	1	M_{SPS}	Max. frequency for a correct DAC_OUT change from core i to i+1LSB, $C_{LOAD} \leq 50pF$, $R_{LOAD} \geq 7.5k\Omega$
T_{WAKEUP}	Wake-up Time	-	9	15	μs	Wakeup time from OFF state. Input code between lowest and highest possible codes. DAC clock source = 1 MHz
PSRR	Power Supply Rejection Ratio[*1]	-	-60	-40	dB	No R_{LOAD}, C_{LOAD} = 50pF

Note:

1. Guaranteed by design, not tested in production.
2. Resistive load between DACOUT and AVSS.
3. Capacitive load at DACOUT pin.
4. Guaranteed based on test during characterization.

8.5.9 Analog Comparator Controller (ACMP)

- The maximum values are obtained for V_{DD} = 3.6 V and maximum ambient temperature (T_A), and the typical values for T_A= 25 °C and V_{DD} = 3.3 V unless otherwise specified.

Symbol	Parameter	Min	Typ	Max	Unit	Comments
AV_{DD}	Analog supply voltage	1.8		3.6	V	
T_A	Temperature	-40		105	˚C	
I_{DD}	Operating current		1.2		μA	MODESEL[1:0] = 00
			3			MODESEL[1:0] = 01
			10			MODESEL[1:0] = 10
			75			MODESEL[1:0] = 11
V_{CM}	Input common mode voltage range [*2]	0.1	1/2 AV_{DD}	AV_{DD} - 0.1		
V_{DI}	Differential input voltage sensitivity [*2]	10	20		mV	Hysteresis disable
V_{offset}	Input offset voltage		5	10	mV	Hysteresis disable,
V_{hys}	Hysteresis window		0		mV	HYSSEL[1:0] = 00
			10			HYSSEL[1:0] = 01
			20			HYSSEL[1:0] = 10
			30			HYSSEL[1:0] = 11
A_v	DC voltage Gain[*1]		70		dB	
T_d	Propagation delay[*2]			4.5	uS	Hysteresis disable MODESEL[1:0] = 00
				2		Hysteresis disable MODESEL[1:0] = 01
				0.6		Hysteresis disable MODESEL[1:0] = 10
				0.2		Hysteresis disable MODESEL[1:0] = 11
T_{Setup}	Setup time[*2]			4.75	uS	Hysteresis disable MODESEL[1:0] = 00
				2.25		Hysteresis disable MODESEL[1:0] = 01
				0.85		Hysteresis disable MODESEL[1:0] = 10
				0.45		Hysteresis disable MODESEL[1:0] = 11

Note:

1. Guaranteed by design, not tested in production

8.5.10 OP Amplifier (OPA)

- The maximum values are obtained for V_{DD} = 3.6 V and maximum ambient temperature (T_A), and the typical values for T_A = 25 °C and V_{DD} = 3.3 V unless otherwise specified.

Symbol	Parameter	Min	Typ	Max	Unit	Comments
AV_{DD}	Analog supply voltage	2.4		3.6	V	
T_A	Temperature	-40		105	°C	
I_{DD}	Consumption current		690		μA	A_{VDD}=3.3V, Temperature=25 °C
CMIR	Common mode input range	0		AV_{DD}	V	
$V_{OFFSET0}$	Input offset voltage(maximum calibration range) [*2]			4	mV	Tj = 25°C, No Load
				6		V_{CM} = AV_{DD}-10mV ~ AV_{DD}-0.8V, All Temp.
$V_{OFFSET1}$	Input offset voltage(After offset calibration) [*2]			3.2		CALRVS =0: Other V_{CM}
				6.5		CALRVS=0: V_{CM} = AV_{DD}-10mV ~ AV_{DD}-0.8V
$V_{OFFSET2}$	Input offset voltage(After offset calibration) [*2]			3		CALRVS =1: Other VCM
				5.2		CALRVS =1: V_{CM} = AV_{DD}-10mV ~ AV_{DD}-0.8V
CMRR	Common Mode Rejection Ratio [*1]		90		dB	
PSRR	Power Supply Rejection Ratio [*1]	73	117		dB	
GBW	Bandwidth [*2]		8.2		MHz	
SR	Slew rate [*2]		4.7		V/μs	
V_{OHSAT}	High saturation voltage [*2]	AV_{DD}-0.1			V	Rload=min. INPUT at AV_{DD}
		AV_{DD}-0.02				Rload=20K, INPUT at AV_{DD}
V_{OLSAT}	Low saturation voltage [*2]			100	mV	Rload=min. INPUT at 0
				20		Rload=20K, INPUT at 0
PM	Phase Margin [*1]		62		degree	
T_{WAKEUP}	Wake up time from OFF state [*2]		2.8	5	μs	
R_{LOAD}	Resistive load	4			kΩ	
C_{LOAD}	Capacitive load			50	pF	

Note:

1. Guaranteed by characteristic, not tested in production

8.6 Flash DC Electrical Characteristic

Symbol	Parameter	Min	Typ	Max	Unit	Test Condition
V_{FLA}[1]	Supply Voltage	1.08		1.32	V	T_A = 25°C
N_{ENDUR}	Endurance	10000	-	-	cycles[2]	
T_{RET}	Data Retention	10	-	-	year	
T_{ERASE}	Page Erase Time	92	-	160	mS	
T_{MER}	Mass Erase Time	201	-	320	mS	
T_{PROG}	Program Time		-	50	uS	
I_{DD1}	Read Current	-	-	4.12	mA	
I_{DD2}	Program Current	-	-	5	mA	
I_{DD3}	Erase Current	-	-	5	uA	

Note:

1. V_{FLA} is source from chip LDO output voltage.
2. Number of program/erase cycles.
3. This table is guaranteed by design, not test in production.

8.7 I²C Dynamic Characteristics

Symbol	Parameter	Standard Mode[1][2]		Fast Mode[1][2]		Unit
		Min.	Max.	Min.	Max.	
t_{LOW}	SCL low period	4.7	-	1.2	-	uS
t_{HIGH}	SCL high period	4	-	0.6	-	uS
$t_{SU;\ STA}$	Repeated START condition setup time	4.7	-	1.2	-	uS
$t_{HD;\ STA}$	START condition hold time	4	-	0.6	-	uS
$t_{SU;\ STO}$	STOP condition setup time	4	-	0.6	-	uS
t_{BUF}	Bus free time	4.7[3]	-	1.2[3]	-	uS
$t_{SU;DAT}$	Data setup time	250	-	100	-	nS
$t_{HD;DAT}$	Data hold time	0[4]	3.45[5]	0[4]	0.8[5]	uS
t_r	SCL/SDA rise time	-	1000	20+0.1C_b	300	nS
t_f	SCL/SDA fall time	-	300	-	300	nS
C_b	Capacitive load for each bus line	-	400	-	400	pF

Note:

1. Guaranteed by characteristic, not tested in production
2. HCLK must be higher than 2 MHz to achieve the maximum standard mode I²C frequency. It must be higher than 8 MHz to achieve the maximum fast mode I²C frequency.
3. I²C controller must be retriggered immediately at slave mode after receiving STOP condition.
4. The device must internally provide a hold time of at least 300 ns for the SDA signal in order to bridge the undefined region of the falling edge of SCL.
5. The maximum hold time of the Start condition has only to be met if the interface does not stretch the low period of SCL signal.

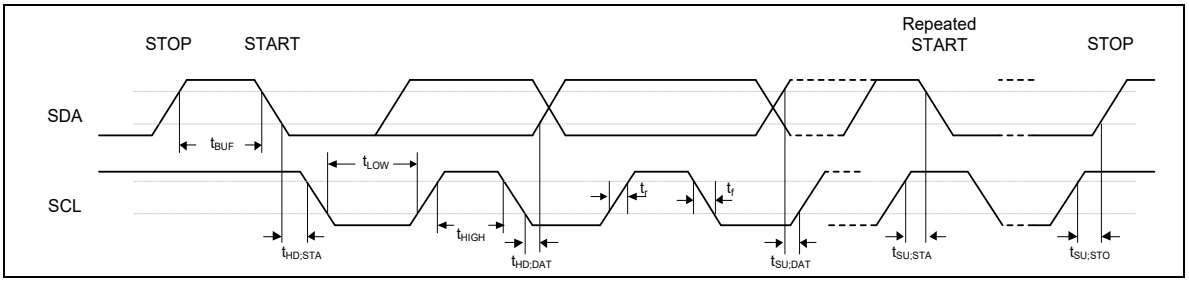

Figure 8.7-1 I²C Timing Diagram

8.8 SPI Dynamic Characteristics

Symbol	Parameter	Min.	Typ.	Max.	Unit
SPI MASTER MODE (V_{DD} = 3.0~3.6 V, 30 PF LOADING CAPACITOR)					
t_{CLKH}	Clock output High time [*1]			T_{SPICLK} / 2	ns
t_{CLKL}	Clock output Low time [*1]			T_{SPICLK} / 2	ns
t_{DS}	Data setup time	0	-	-	ns
t_{DH}	Data hold time	2	-	-	ns
t_V	Data output valid time	-	0	1	ns
SPI MASTER MODE (V_{DD} = 1.8~2.0 V, 30 PF LOADING CAPACITOR)					
t_{CLKH}	Clock output High time [*1]			T_{SPICLK} / 2	ns
t_{CLKL}	Clock output Low time [*1]			T_{SPICLK} / 2	ns
t_{DS}	Data setup time	0	-	-	ns
t_{DH}	Data hold time	2	-	-	ns
t_V	Data output valid time	-	-	1	ns

Note:

1. The minimum clock period for SPICLK is 10.4 ns (96 MHz).

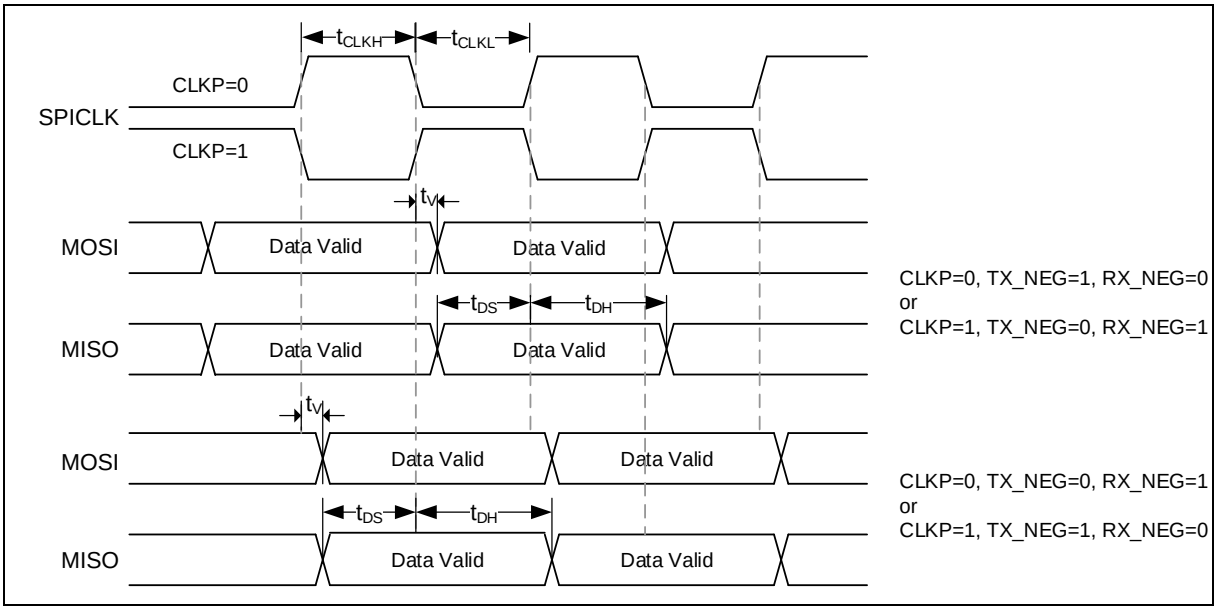

Figure 8.8-1 SPI Master Mode Timing Diagram

Symbol	Parameter	Min.	Typ.	Max.	Unit
SPI SLAVE MODE (V_{DD} = 3.0~3.6V, 30 PF LOADING CAPACITOR)					
t_{CLKH}	Clock output High time [*1]	-	-	T_{SPICLK} / 2	ns
t_{CLKL}	Clock output Low time [*1]	-		T_{SPICLK} / 2	ns
t_{SS}	Slave select setup time	1 T_{SPICLK} + 2ns	-	-	ns
t_{SH}	Slave select hold time	1 T_{SPICLK}	-	-	ns
t_{DS}	Data input setup time	0	-	-	ns
t_{DH}	Data input hold time	2	-	-	ns
t_V	Data output valid time	-		8	ns
t_{CLKH}	Clock output High time [*1]	-	-	T_{SPICLK} / 2	ns
SPI SLAVE MODE (V_{DD} = 1.8 V ~ 2.0 V, 30 PF LOADING CAPACITOR)					
t_{CLKH}	Clock output High time [*1]	-	-	T_{SPICLK} / 2	ns
t_{CLKL}	Clock output Low time [*1]	-	-	T_{SPICLK} / 2	ns
t_{SS}	Slave select setup time	1 T_{SPICLK} + 3ns	-	-	ns
t_{SH}	Slave select hold time	1 T_{SPICLK}	-	-	ns
t_{DS}	Data input setup time	0	-	-	ns
t_{DH}	Data input hold time	2	-	-	ns
t_V	Data output valid time	-		10	ns

Note:

1. The minimum clock period for SPICLK is 10.4 ns (96 MHz).

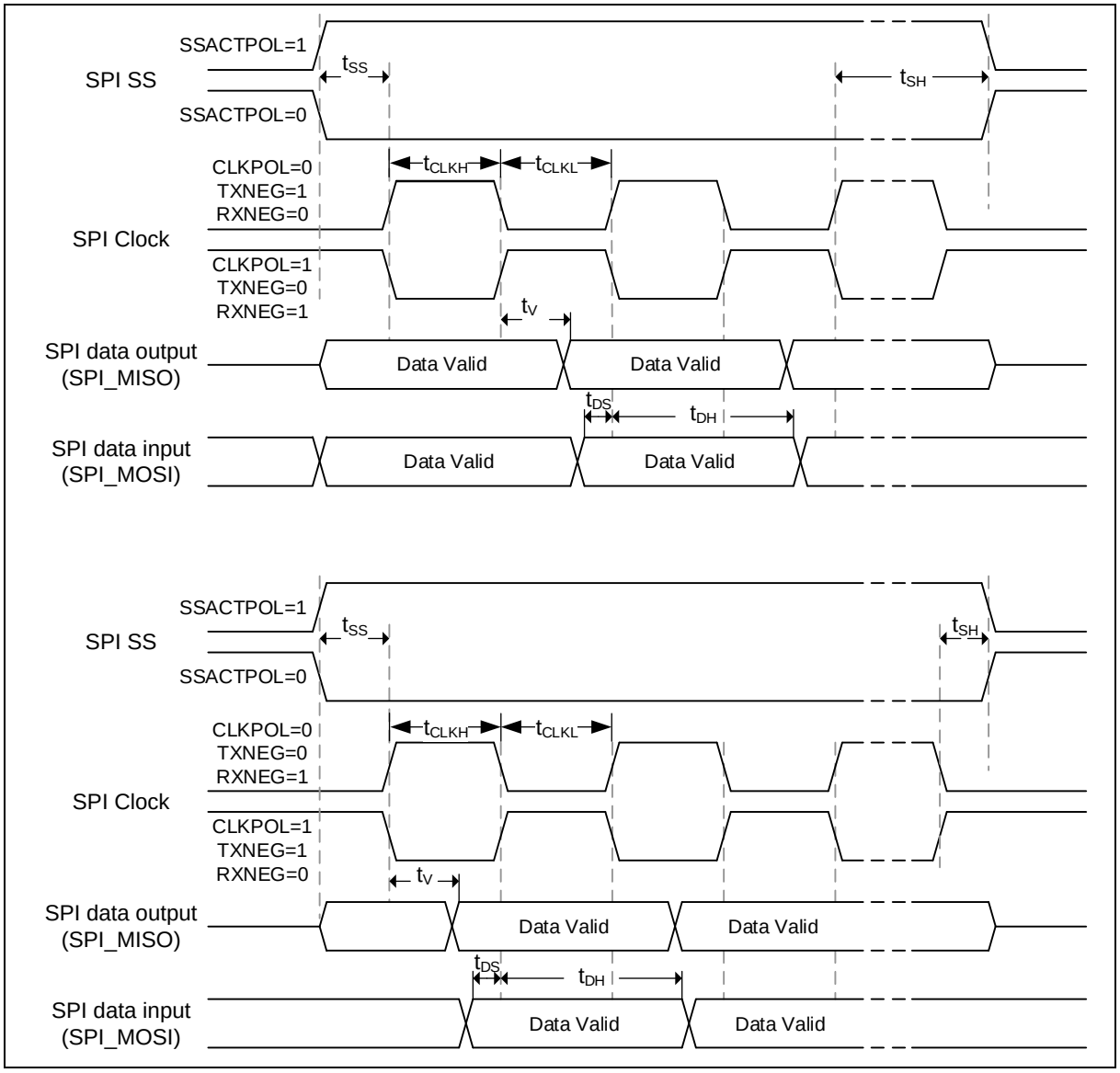

Figure 8.8-2 SPI Slave Mode Timing Diagram

8.9 I²S Dynamic Characteristics

Symbol	Parameter	Min	Max	Unit	Test Conditions
$t_{w(CKH)}$	I²S clock high time	40	-	ns	Master f_{PCLK} = MHz, data: 24 bits, audio frequency = 256 kHz
$t_{w(CKL)}$	I²S clock low time	40	-		
$t_{v(WS)}$	WS valid time	4	16		Master mode
$t_{h(WS)}$	WS hold time	1	-		Master mode
$t_{su(WS)}$	WS setup time	24	-		Slave mode
$t_{h(WS)}$	WS hold time	0	-		Slave mode
$DuCy_{(SCK)}$	I²S slave input clock duty cycle	30	70	%	Slave mode
$t_{su(SD_MR)}$	Data input setup time	10	-	ns	Master receiver
$t_{su(SD_SR)}$		7	-		Slave receiver
$t_{h(SD_MR)}$	Data input hold time	7	-		Master receiver
$t_{h(SD_SR)}$		4	-		Slave receiver
$t_{v(SD_ST)}$	Data output valid time	-	10		Slave transmitter (after enable edge)
$t_{h(SD_ST)}$	Data output hold time	4	-		Slave transmitter (after enable edge)
$t_{v(SD_MT)}$	Data output valid time	-	4		Master transmitter (after enable edge)
$t_{h(SD_MT)}$	Data output hold time	0	-		Master transmitter (after enable edge)

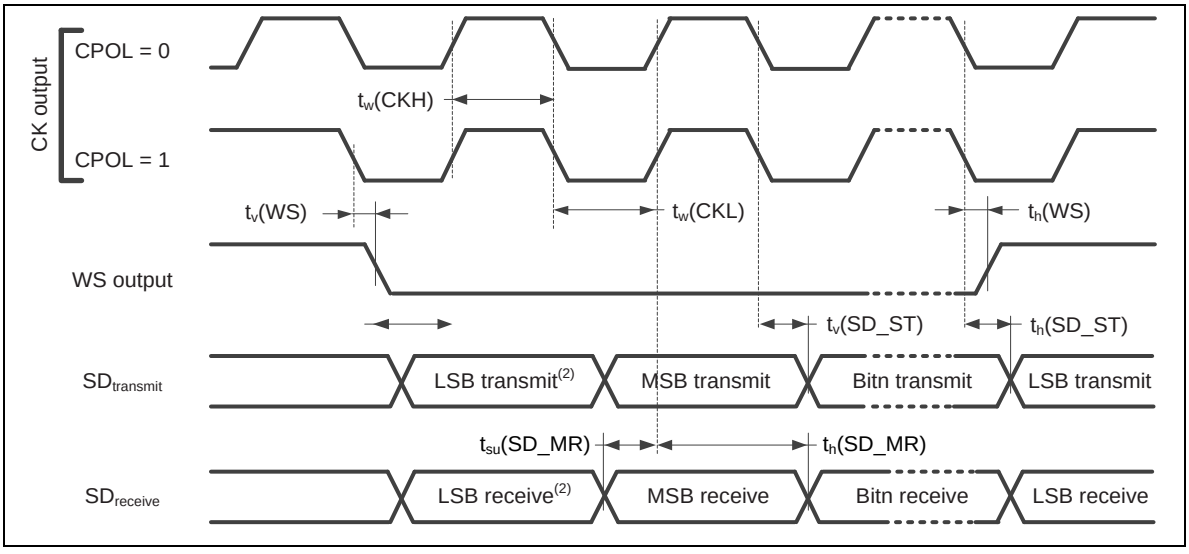

Figure 8.9-1 I²S Master Mode Timing Diagram

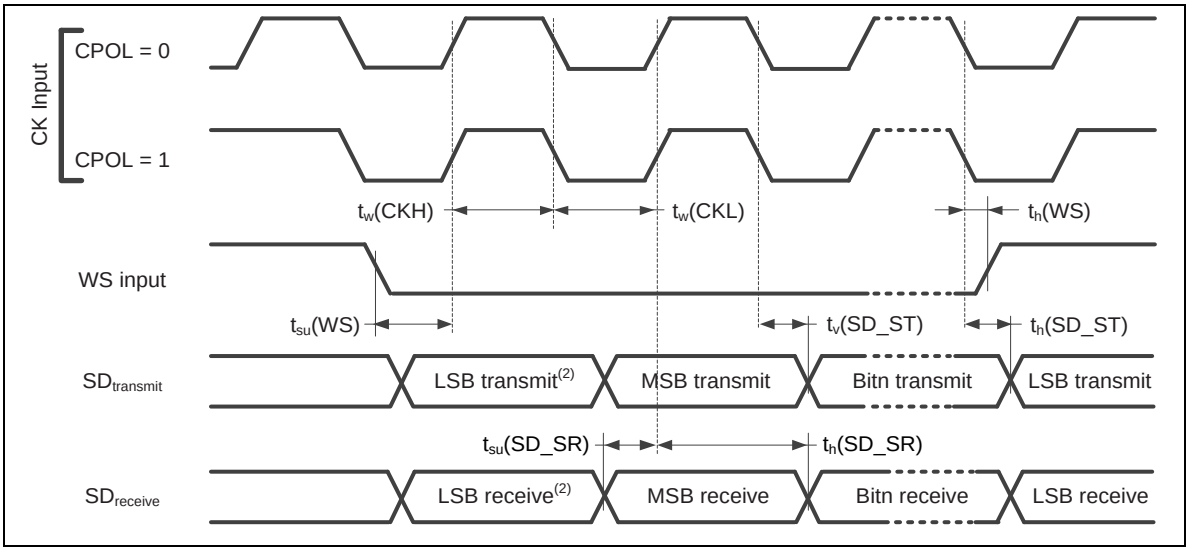

Figure 8.9-2 I²S Slave Mode Timing Diagram

8.10 USCI - I²C Dynamic Characteristics

Symbol	Parameter	Standard Mode[1][2]		Fast Mode[1][2]		Unit
		Min.	Max.	Min.	Max.	
t_{LOW}	SCL low period	4.7	-	1.2	-	uS
t_{HIGH}	SCL high period	4	-	0.6	-	uS
$t_{SU;\ STA}$	Repeated START condition setup time	4.7	-	1.2	-	uS
$t_{HD;\ STA}$	START condition hold time	4	-	0.6	-	uS
$t_{SU;\ STO}$	STOP condition setup time	4	-	0.6	-	uS
t_{BUF}	Bus free time	4.7[3]	-	1.2[3]	-	uS
$t_{SU;DAT}$	Data setup time	250	-	100	-	nS
$t_{HD;DAT}$	Data hold time	0[4]	3.45[5]	0[4]	0.8[5]	uS
t_r	SCL/SDA rise time	-	1000	20+0.1C_b	300	nS
t_f	SCL/SDA fall time	-	300	-	300	nS
C_b	Capacitive load for each bus line	-	400	-	400	pF

Note:

1. Guaranteed by characteristic, not tested in production
2. HCLK must be higher than 2 MHz to achieve the maximum standard mode I²C frequency. It must be higher than 8 MHz to achieve the maximum fast mode I²C frequency.
3. I²C controller must be retriggered immediately at slave mode after receiving STOP condition.
4. The device must internally provide a hold time of at least 300 ns for the SDA signal in order to bridge the undefined region of the falling edge of SCL.
5. The maximum hold time of the Start condition has only to be met if the interface does not stretch the low period of SCL signal.

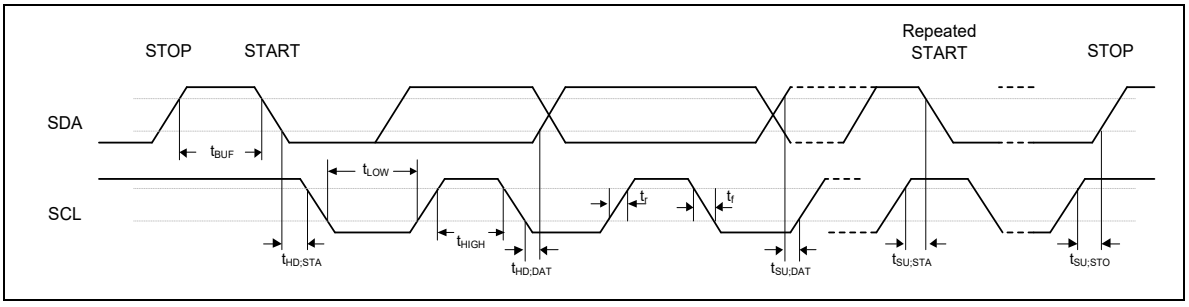

Figure 8.10-1 I²C Timing Diagram

8.11 USCI - SPI Dynamic Characteristics

Symbol	Parameter	Min.	Typ.	Max.	Unit
SPI MASTER MODE (V_{DD} = 3.0~3.6 V, 30 PF LOADING CAPACITOR)					
t_{CLKH}	Clock output High time [*1]			T_{SPICLK} / 2	ns
t_{CLKL}	Clock output Low time [*1]			T_{SPICLK} / 2	ns
t_{DS}	Data setup time	0	-	-	ns
t_{DH}	Data hold time	2	-	-	ns
t_V	Data output valid time	-	0	1	ns
SPI MASTER MODE (V_{DD} = 1.8~2.0 V, 30 PF LOADING CAPACITOR)					
t_{CLKH}	Clock output High time [*1]			T_{SPICLK} / 2	ns
t_{CLKL}	Clock output Low time [*1]			T_{SPICLK} / 2	ns
t_{DS}	Data setup time	0	-	-	ns
t_{DH}	Data hold time	2	-	-	ns
t_V	Data output valid time	-	-	1	ns

Note:

1. The minimum clock period for SPICLK is 10.4 ns (96 MHz).

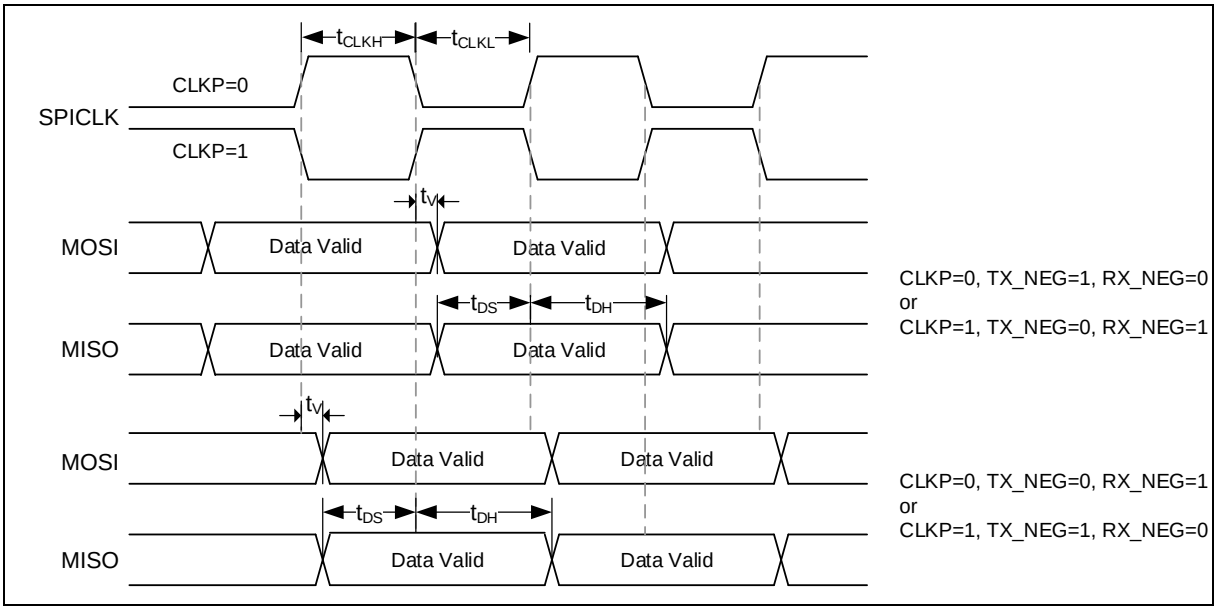

Figure 8.11-1 SPI Master Mode Timing Diagram

Symbol	Parameter	Min.	Typ.	Max.	Unit
SPI SLAVE MODE (V_{DD} = 3.0~3.6V, 30 PF LOADING CAPACITOR)					
t_{CLKH}	Clock output High time [*1]	-	-	T_{SPICLK} / 2	ns
t_{CLKL}	Clock output Low time [*1]	-		T_{SPICLK} / 2	ns
t_{SS}	Slave select setup time	1 T_{SPICLK} + 2ns	-	-	ns
t_{SH}	Slave select hold time	1 T_{SPICLK}	-	-	ns
t_{DS}	Data input setup time	0	-	-	ns
t_{DH}	Data input hold time	2	-	-	ns
t_V	Data output valid time	-		8	ns
t_{CLKH}	Clock output High time [*1]	-	-	T_{SPICLK} / 2	ns
SPI SLAVE MODE (V_{DD} = 1.8 V ~ 2.0 V, 30 PF LOADING CAPACITOR)					
t_{CLKH}	Clock output High time [*1]	-	-	T_{SPICLK} / 2	ns
t_{CLKL}	Clock output Low time [*1]	-	-	T_{SPICLK} / 2	ns
t_{SS}	Slave select setup time	1 T_{SPICLK} + 3ns	-	-	ns
t_{SH}	Slave select hold time	1 T_{SPICLK}	-	-	ns
t_{DS}	Data input setup time	0	-	-	ns
t_{DH}	Data input hold time	2	-	-	ns
t_V	Data output valid time	-		10	ns

Note:

1. The minimum clock period for SPICLK is 10.4 ns (96 MHz).

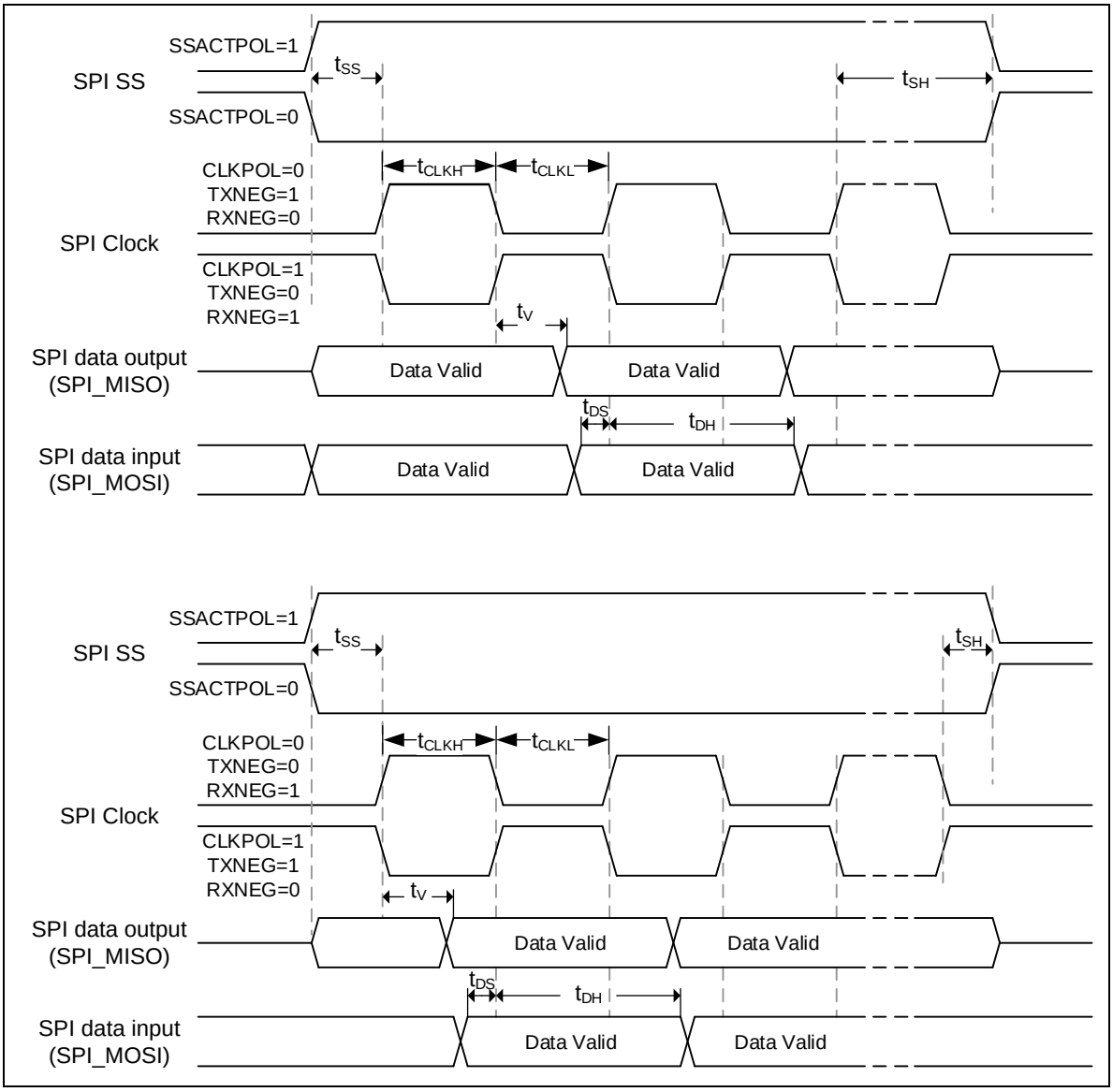

Figure 8.11-2 SPI Slave Mode Timing Diagram

8.12 USB Characteristics

8.12.1 USB Full-Speed

Symbol	Parameter	Min.	Typ.	Max.	Unit	Test Conditions
V_{BUS}	USB full speed transceiver operating voltage	4.4		5.25	V	
V_{DD}	Operation Voltage	3.0		3.6	V	
V_{IH}	Input High (driven)	2.0	-	-	V	-
V_{IL}	Input Low	-	-	0.8	V	-
V_{DI}	Differential Input Sensitivity	0.2	-	-	V	|PADP-PADM|
V_{CM}	Differential Common-mode Range	0.8	-	2.5	V	Includes V_{DI} range
V_{SE}	Single-ended Receiver Threshold	0.8	-	2.0	V	-
	Receiver Hysteresis	-	200	-	mV	-
V_{OL}	Output Low (driven)	0	-	0.3	V	-
V_{OH}	Output High (driven)	2.8	-	3.6	V	-
V_{CRS}	Output Signal Cross Voltage	1.3	-	2.0	V	-
R_{PU}	Pull-up Resistor	1.425	-	1.575	kΩ	-
R_{PD}	Pull-down Resistor	14.25	-	15.75	kΩ	
V_{TRM}	TERMINATION Voltage for Uptream port pull up (RPU)	3.0	-	3.6	V	
Z_{DRV}	Driver Output Resistance	-	13	-	Ω	Steady state drive*
C_{IN}	Transceiver Capacitance	-	-	20	pF	Pin to GND

8.12.2 USB Full-Speed PHY Characteristics

Symbol	Parameter	Min.	Typ.	Max.	Unit	Test Conditions
T_{FR}	Rise Time	4	-	20	ns	C_L=50p
T_{FF}	Fall Time	4	-	20	ns	C_L=50p
T_{FRFF}	Rise and Fall Time Matching	90	-	111.11	%	$T_{FRFF}=T_{FR}/T_{FF}$

8.12.3 USB High-Speed Characteristics

Symbol	Parameter	Min	Typ	Max	Unit	Test Condition
T_{FR}	High Speed Driver Rise Time	500	-		ps	CL=5pF
T_{FF}	High Speed Driver Fall Time	500	-		ps	CL=5pF
T_{FRFF}	Rise and Fall Time Matching	90		111.11	%	$T_{FRFF}=T_{FR}/T_{FF}$

8.13 Ethernet Characteristics

8.13.1 RMII Interface Timing

Symbol	Parameter	Min	Typ	Max	Unit	Test Condition
$T_{P_RMII_REFCLK}$	RMII_REFCLK Period	-	20.0 +/- 50 ppm	-	ns	-
$T_{H_RMII_REFCLK}$	RMII_REFCLK High Time	8.0	10.0	12.0	ns	-
$T_{L_RMII_REFCLK}$	RMII_REFCLK Low Time	8.0	10.0	12.0	ns	-
$T_{DLY_RMII_TX}$	RMII_REFCLK Rising to Valid RMII_TXEN, RMII_TXDATA0 and RMII_TXDATA1 Delay	-	-	10	ns	-
$T_{SU_RMII_RX}$	RMII_CRSDV, RMII_RXDATA0 and RMII_RXDATA1 Setup Time to RMII_REFCLK Rising	5	-	-	ns	-
$T_{HD_RMII_RX}$	RMII_CRSDV, RMII_RXDATA0 and RMII_RXDATA1 Hold Time from RMII_REFCLK Rising	2	-	-	ns	-

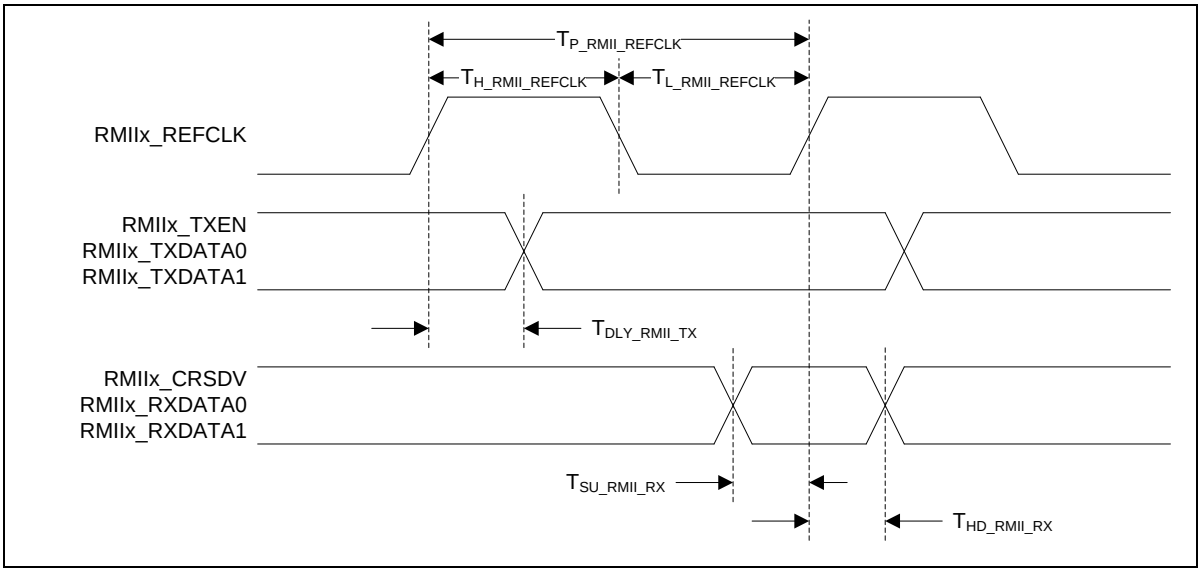

Figure 8.13-1 RMII Interface Timing Diagram

8.13.2 Ethernet PHY Management Interface Timing

Symbol	Parameter	Min	Typ	Max	Unit	Test Condition
$T_{P_RMII_MDC}$	RMII_MDC Period	400	-	-	ns	-
$T_{H_RMII_MDC}$	RMII_MDC High Time	200	-	-	ns	-
$T_{L_RMII_MDC}$	RMII_MDC Low Time	200	-	-	ns	-
$T_{DLY_RMII_MDIOWR}$	RMII_MDC Falling to Valid RMII_MDIO Delay	-	-	10	ns	-
$T_{SU_RMII_MDIORD}$	RMII_MDIO Setup Time to RMII_MDC Rising	10	-	-	ns	-
$T_{HD_RMII_MDIORD}$	RMII_MDIO Hold Time from RMII_MDC Rising	10	-	-	ns	-

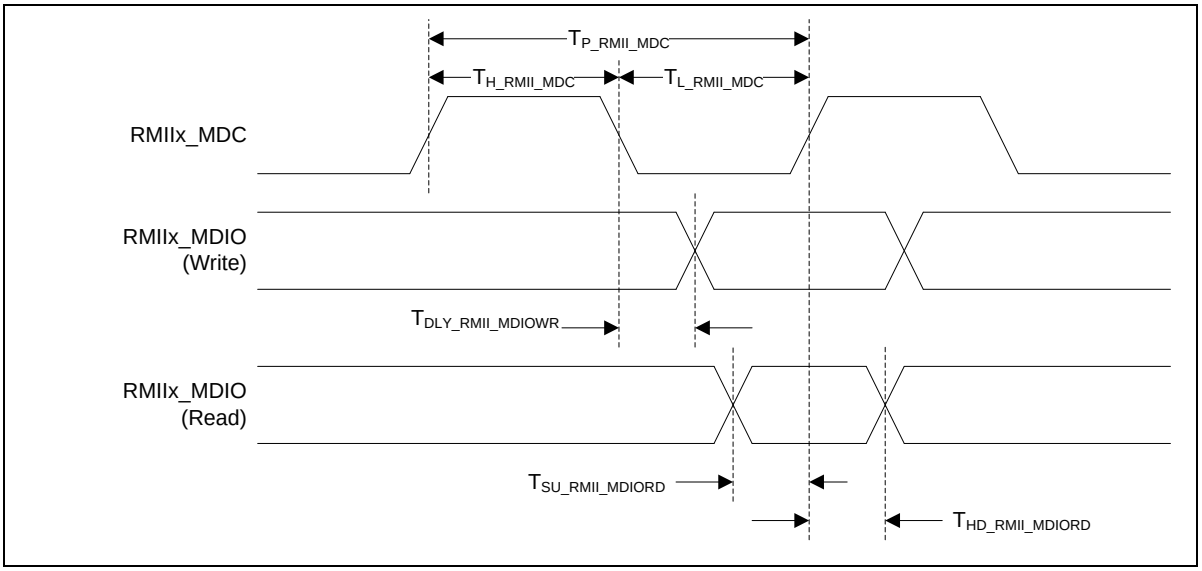

Figure 8.13-2 Ethernet PHY Management Interface Timing Diagram

8.14 SDIO Characteristics

8.14.1 Default Mode Timing

Symbol	Parameter	Min	Typ	Max	Unit	Test Condition
$T_{P_SD_CLK}$	SD_CLK Period (Data Transfer Mode)	40	-	-	ns	-
$T_{P_SD_CLK_ID}$	SD_CLK Period (Identification Mode)	2,500	-	-	ns	
$T_{H_SD_CLK}$	SD_CLK High Time	-	20	-	ns	-
$T_{L_SD_CLK}$	SD_CLK Low Time	-	20	-	ns	-
$T_{SU_SD_IN}$	SD_DATA Setup Time to SD_CLK Rising	5	-	-	ns	-
$T_{HD_SD_IN}$	SD_DATA Hold Time from SD_CLK Rising	5	-	-	ns	-
$T_{DLY_SD_OUT}$	SD_CLK Falling to Valid SD_DATA Delay	-	-	14	ns	-

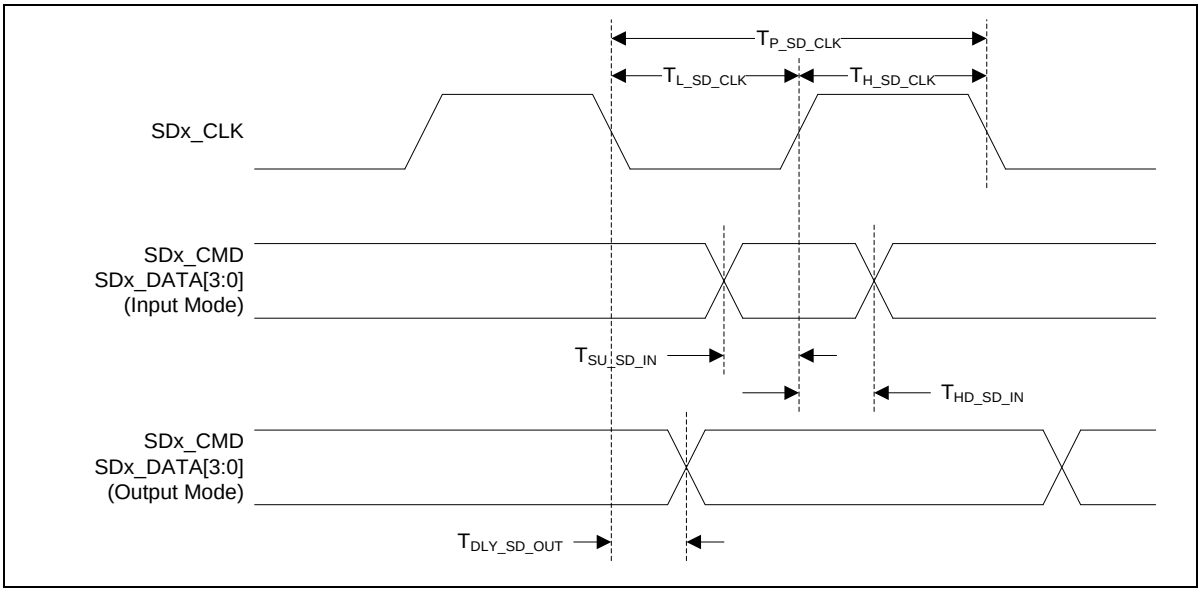

Figure 8.14-1 SDIO Default Mode

8.14.2 SDIO Dynamic Characteristics

Symbol	Parameter	Min	Typ	Max	Unit	Test Condition
$T_{P_SD_CLK}$	SD_CLK Period	20	-	-	ns	-
$T_{H_SD_CLK}$	SD_CLK High Time	7	-	-	ns	-
$T_{L_SD_CLK}$	SD_CLK Low Time	7	-	-	ns	-
$T_{SU_SD_IN}$	SD_DATA Setup Time to SD_CLK Rising	6	-	-	ns	-
$T_{HD_SD_IN}$	SD_DATA Hold Time from SD_CLK Rising	2	-	-	ns	-
$T_{DLY_SD_OUT}$	SD_CLK Falling to Valid SD_DATA Delay	-	-	14	ns	-
$T_{HD_SD_OUT}$	SD_DATA Hold Time from SD_CLK Rising	2.5	-	-	ns	-

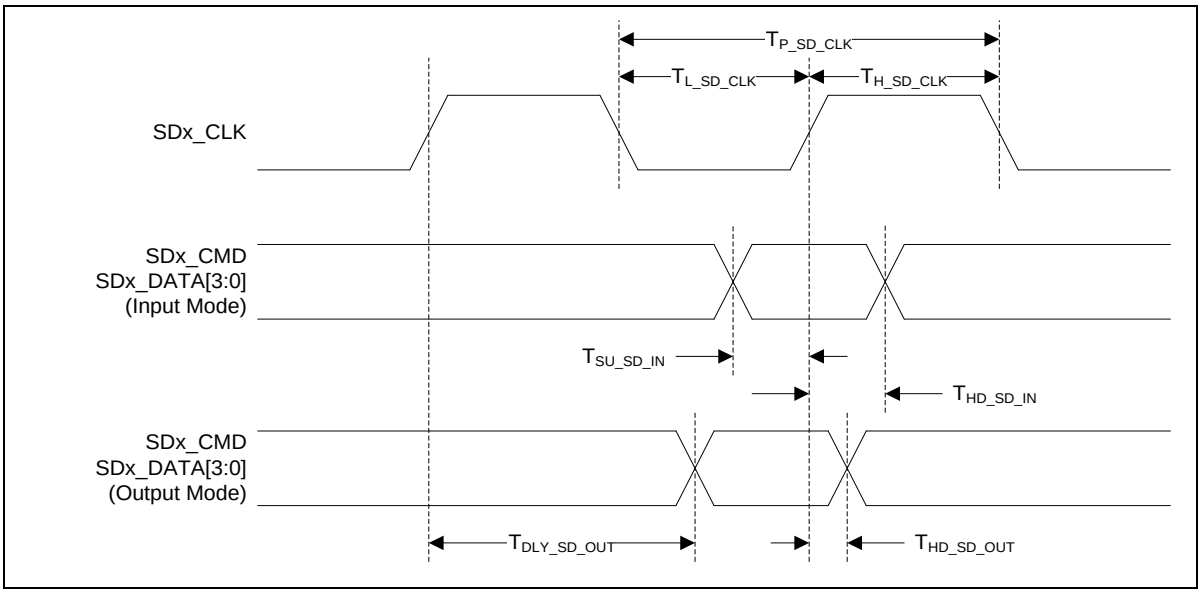

Figure 8.14-2 SDIO High-speed Mode

8.15 EBI Characteristics

8.15.1 EBI Timing

Symbol	Parameter	Min	Typ	Max	Unit	Test Condition
T_{tACS}	Address Setup Time to EBI_nCS Falling Edge	-	0	-	T_{HCLK}[1]	-
T_{tCOS}	EBI_nCS Setup Time to EBI_nWE or EBI_nOE Falling Edge	-	1	-	T_{HCLK}[1]	-
T_{tACC}	EBI_nWE or EBI_nOE Active Low Time	1[2]	-	32	T_{HCLK}[1]	-
T_{tCOH}	EBI_nCS Hold Time from EBI_nWE or EBI_nOE Rising Edge	0	-	8	T_{HCLK}[1]	-
$T_{SU_EBI_RD}$	EBI_DATA Read Setup Time to EBI_nOE Rising Edge	1	-	-	T_{HCLK}[1]	-

Notes:

1. T_{HCLK} is the period of EBI's operating clock.
2. T_{tACC} must be set for at least 21ns.

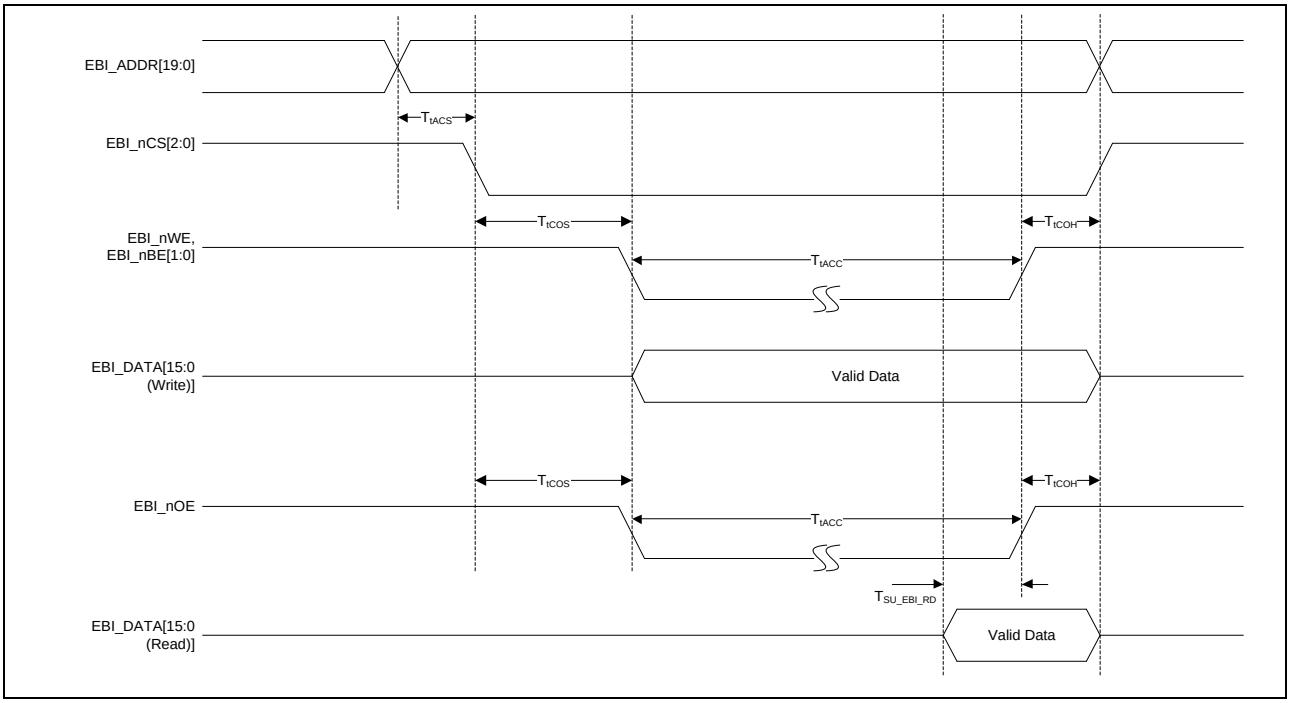

Figure 8.15-1 External Bus Interface Timing Diagram

8.16 SPI Flash Characteristics (M487KMCAN)

Symbol	Parameter	Min	Typ	Max	Unit	Test Condition
N_{ENDUR}	Endurance	100K			cycles[1]	V_{DD} = 3.0 V, T_A = +25 °C
T_{RET}	Data Retention	20			year	
T_{PROG}	Page Program Time(256 bytes)		0.4	3	ms	
T_{SE}	Sector Erase Time (4KB)		45	400	ms	
T_{BE1}	Block Erase Time (32KB)		120	1600	ms	
T_{BE2}	Block Erase Time (64KB)		150	2000	ms	
T_{CE}	Chip Erase Time		5	25	s	
I_{DD1}	Current Read Data		6	18	mA	
I_{DD2}	Current Page Program		20	25	mA	
I_{DD3}	Current Sector/Block Erase		20	25	mA	
I_{DD3}	Current Chip Erase		20	25	mA	

Note:

1. Number of program/erase cycles.
2. This table is guaranteed by design, not test in production.

9 ELECTRICAL CHARACTERISTICS FOR M48XGC/M48XE8

9.1 Absolute Maximum Ratings

Stresses above the absolute maximum ratings may cause permanent damage to the device. The limiting values are stress ratings only and cannot be used to functional operation of the device. Exposure to the absolute maximum ratings may affect device reliability and proper operation is not guaranteed.

9.1.1 Voltage Characteristics

Symbol	Description	Min	Max	Unit
V_{DD}-V_{SS}[*1]	DC Power Supply	-0.3	4	V
V_{DDIO}-V_{SS}	V_{DDIO} Power Supply	-0.3	4	V
$\|V_{DDX} – V_{DD}\|$	Variations between different power pins		50	mV
$\|V_{DD} –AV_{DD}\|$	Allowed voltage difference for V_{DD} and AV_{DD}		50	mV
$\|V_{SSX} - V_{SS}\|$	Variations between different ground pins		50	mV
$\|V_{SS} - AV_{SS}\|$	Allowed voltage difference for V_{SS} and AV_{SS}		50	mV
V_{IN}	Input Voltage on 5V-tolerance GPIO		5.5	V
	Input Voltage on RTC domain (PF.6 ~ PF.11)		V_{DD}	V
	Input Voltage on any other pin[*2]		V_{DD}	V

Note:

1. All main power (V_{DD}, AV_{DD}) and ground (V_{SS}, AV_{SS}) pins must always be connected to the external power supply, in the permitted range.
2. Non 5V-tolerance PIN: PA.8 ~ 15; PB.0 ~ 15; PD.10, 11, 12; PF.2, 3, 4, 5; All USB High Speed PIN and nRESET PIN.

Table 9.1-1 Voltage Characteristics

9.1.2 Current Characteristics

Symbol	Description	Min	Max	Unit
ΣI_{DD}[*1]	Maximum current into V_{DD}	-	200	mA
I_{DDIO}	Maximum Current into V_{DDIO}	-	100	
I_{BAT}	Maximum Current into V_{BAT}	-	100	
ΣI_{SS}	Maximum current out of V_{SS}	-	100	
I_{IO}	Maximum current sunk by a I/O Pin	-	20	
	Maximum current sourced by a I/O Pin	-	20	
	Maximum current sunk by total I/O Pins[*2]	-	100	
	Maximum current sourced by total I/O Pins[*2]	-	100	
$I_{INJ(PIN)}$ [*3]	Maximum injected current by a I/O Pin	-	±5	
$\Sigma I_{INJ(PIN)}$ [*3]	Maximum injected current by total I/O Pins	-	±25	

Note:

1. Maximum allowable current is a function of device maximum power dissipation.
2. This current consumption must be correctly distributed over all I/Os and control pins. The total output current must not be sunk/sourced between two consecutive power supply pins.
3. A positive injection is caused by $V_{IN}>A_{VDD}$ and a negative injection is caused by $V_{IN}<V_{SS}$. $I_{INJ(PIN)}$ must never be exceeded. It is recommended to connect an overvoltage protection diode between the analog input pin and the voltage supply pin.

Table 9.1-2 Current Characteristics

9.1.3 Thermal Characteristics

The average junction temperature can be calculated by using the following equation:

$T_J = T_A + (P_D \times \theta_{JA})$

- T_A = ambient temperature (℃)
- θ_{JA} = thermal resistance junction-ambient (℃/Watt)
- P_D = sum of internal and I/O power dissipation

Symbol	Description	Min	Typ	Max	Unit
T_A	Operating ambient temperature	-40	-	105	°C
T_J	Operating junction temperature	-40	-	125	
T_{ST}	Storage temperature	-65	-	150	
	Thermal resistance junction-ambient 33-pin QFN(5x5 mm)	-	39.6	-	℃/Watt
	Thermal resistance junction-ambient 48-pin LQFP(7x7 mm)	-	60	-	℃/Watt
	Thermal resistance junction-ambient 64-pin LQFP(7x7 mm)	-	58	-	℃/Watt
	Thermal resistance junction-ambient 128-pin LQFP(14x14 mm)	-	38.5	-	℃/Watt

Note:

2. Determined according to JESD51-2 Integrated Circuits Thermal Test Method Environment Conditions

Table 9.1-3 Thermal Characteristics

9.1.4 EMC Characteristics

9.1.4.1 Electrostatic discharge (ESD)

For the Nuvoton MCU products, there are ESD protection circuits which built into chips to avoid any damage that can be caused by typical levels of ESD.

9.1.4.2 Static latchup

Two complementary static tests are required on six parts to assess the latchup

performance:

- A supply overvoltage is applied to each power supply pin
- A current injection is applied to each input, output and configurable I/O pin

9.1.4.3 Electrical fast transients (EFT)

In some application circuit compoment will produce fast and narrow high-frequency trasnients bursts of narrow high-frequency transients on the power distribution system..

- Inductive loads:
  - Relays, switch contactors
  - Heavy-duty motors when de-energized etc.

The fast transient immunity requirements for electronic products are defined in IEC 61000-4-4 by International ElectrotechnicalCommission (IEC).

Symbol	Description	Conditions	Maximum Value	Unit
V_{EFTB}	1. Fast transient voltage burst limits to be applied through 100 pF + 47uF on V_{DD} and V_{SS} pins to induce a functional disturbance 2. to be applied through 2.2uF on LDO_Pin and V_{SS} pins	V_{DD} = 3.3 V, LQFP128, T_A = +25 °C, f_{HCLK} = 192 MHz	4.4	kV

Table 9.1-4 EMS Characteristics

Symbol	Ratings	Conditions	Maximum Value	Unit
$V_{ESD(HBM)}$	Electrostatic discharge voltage (human body model)	T_A = +25 °C	2[*1]	kV
$V_{ESD(CDM)}$	Electrostatic discharge voltage (charge device model)	T_A = +25 °C	0.5[*1]	
Note: 2. Guaranteed by characterization results, not tested in production.				

Table 9.1-5 ESD Characteristics

Symbol	Parameter	Conditions	Value	Unit
LU	Static latch-up class	T_A +25 °C	400mA	mA
Note: 1. Guaranteed by characterization results, not tested in production.				

Table 9.1-6 Electrical Characteristics

9.1.5 Package Moisture Sensitivity(MSL)

The MSL rating of an IC determines its floor life before the board mounting once its dry bag has been opened. All Nuvoton surface mount chips have a moisture level classification. The information is also displayed on the bag packing.

Pacakge	MSL
33-pin QFN(5x5 mm) [*1]	MSL 3
48-pin LQFP(7x7 mm) [*1]	MSL 3
64-pin LQFP(7x7 mm) [*1]	MSL 3
128-pin LQFP(14x14 mm) [*1]	MSL 3
Note: 2. Determined according to IPC/JEDEC J-STD-020	

Table 9.1-7 Package Moisture Sensitivity(MSL)

9.1.6 Soldering Profile

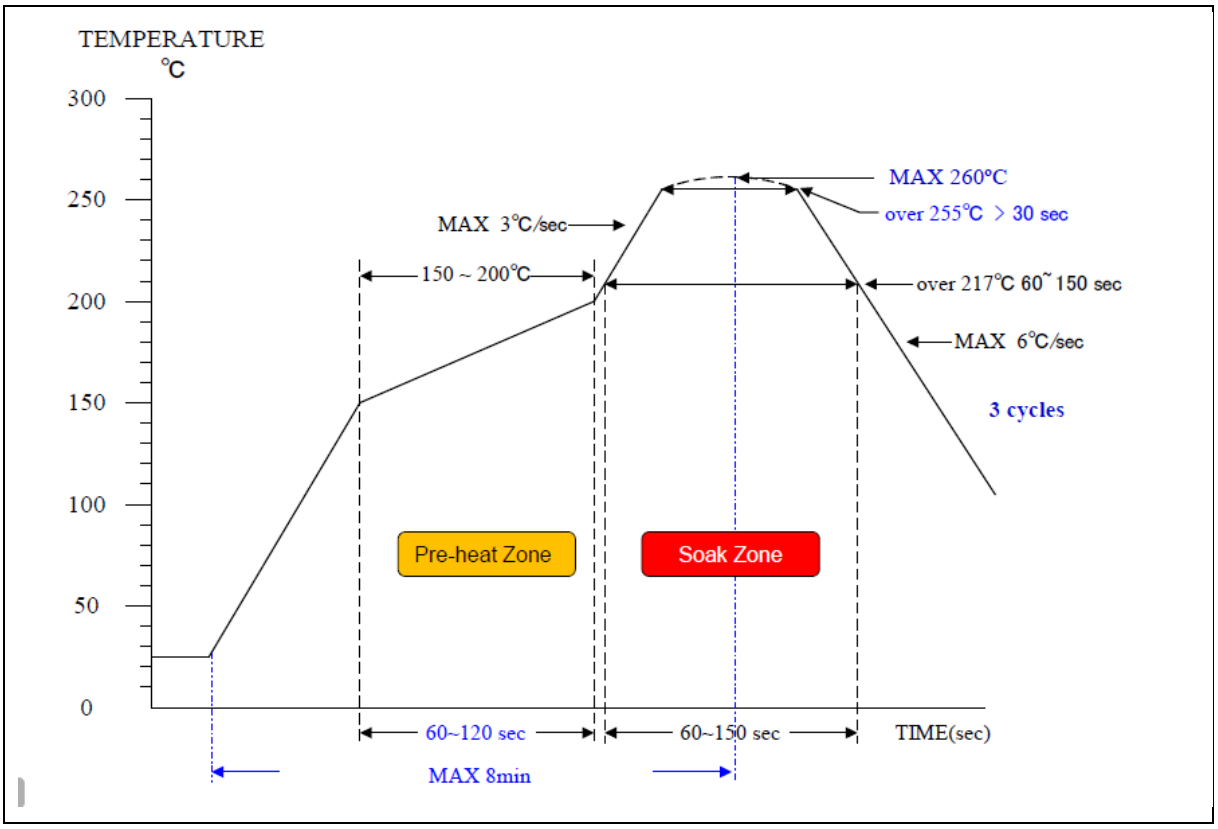

Figure 9.1-1 Soldering Profile From J-STD-020C

Porfile Feature	Pb Free Package
Average ramp-up rate (217°C to peak)	3℃/sec. max
Preheat temperature 150°C ~200°C	60 sec. to 120 sec.
Temperature maintained above 217°C	60 sec. to 150 sec.
Time with 5°C of actual peak temperature	> 30 sec.
Peak temperature range	260°C
Ramp-down rate	6℃/sec ax.
Time 25°C to peak temperature	8 min. max
Note: 2. Determined according to J-STD-020C	

Table 9.1-8 Soldering Profile

9.2 General Operating Conditions

(V_{DD}-V_{SS} = 1.8 ~ 3.6V, T_A = 25°C, HCLK = 192 MHz unless otherwise specified.)

Symbol	Parameter	Min	Typ	Max	Unit	Test Conditions
T_A	Temperature	-40	-	105	°C	
f_{HCLK}	Internal AHB clock frequency	-	-	192	MHz	
V_{DD}	Operation voltage	1.8	-	3.6	V	
V_{DDIO}	V_{DDIO} Operation voltage	1.8	-	3.6		
V_{BAT}	V_{BAT} Operation voltage	1.8	-	3.6		
AV_{DD}[*1]	Analog operation voltage	V_{DD}				
V_{REF}	Analog reference voltage	1.8	-	AV_{DD}		
V_{LDO}	LDO output voltage	-	1.26	-		
V_{BG}	Band-gap voltage	1.17		1.23		
C_{LDO}[*2]	LDO output capacitor on each pin	1			µF	LQFP128/LQFP64
		2.2			µF	LQFP48/QFN32/QFN48
R_{ESR}[*3]	ESR of C_{LDO} output capacitor	0.1	-	10	Ω	
I_{RUSH}[*3]	InRush current on voltage regulator power-on (POR or wakeup from Standby)	-	150	-	mA	
E_{RUSH}[*3]	InRush energy on voltage regulator power-on (POR or wakeup from Standby)	-	3.65	-	µC	V_{DD} = 1.8 V, T_A = 105 °C, I_{RUSH} = 146 mA for 25 µs

Note:

1. It is recommended to power V_{DD} and AV_{DD} from the same source. A maximum difference of 0.3 V between V_{DD} and AV_{DD} can be tolerated during power-on and power-off operation .
2. To ensure stability, an external 1 µF output capacitor, C_{LDO} must be connected between the LDO_CAP pin and the closest GND pin of the device. Solid tantalum and multilayer ceramic capacitors are suitable as output capacitor. Additional 100 nF bypass capacitor between LDO_CAP pin and the closest GND pin of the device helps decrease output noise and improves the load transient response.
3. Guaranteed by design, not tested in production

Table 9.2-1 General Operating Conditions

9.3 DC Electrical Characteristics

9.3.1 Supply Current Characteristics

The current consumption is a combination of internal and external parameters and factors such as operating frequencies, device software configuration, I/O pin loading, I/O pin switching rate, program location in memory and so on. The current consumption is measured as described in below condition and table to inform test characterization result.

- All GPIO pins are in push pull mode and output high.
- The maximum values are obtained for V_{DD} = 3.6 V and maximum ambient temperature (T_A), and the typical values for T_A= 25 °C and V_{DD} = 1.8~3.6 V unless otherwise specified.
- $V_{DD} = AV_{DD} = V_{DDIO} = V_{BAT}$
- When the peripherals are enabled HCLK is the system clock, $f_{PCLK0, 1} = f_{HCLK}/2$.
- Program run while(1){} from Flash

Symbol	Conditions	F_{HCLK}	Typ [*1]	Max[*1][*2]			Unit
			T_A = 25 °C	T_A = -40 °C	T_A = 25 °C	T_A = 105 °C	
I_{DD_RUN}	Normal run mode, executed from Flash, all peripherals disable HIRC, PLL, HXT,LIRC or LXT clock	192 MHz	25.14	24.11	26.95	54.03	mA
		160 MHz	21.4	20.27	23.1	49.66	
		144 MHz	19.19	17.94	20.86	47	
		120 MHz	17.4	17	19.39	45.94	
		12 MHz	3.1	2.36	4.55	29.92	
		32.768 kHz	1.54	0.99	3.11	28.20	
		10 kHz	1.07	0.39	2.63	27.6	
	Normal run mode, executed from Flash, all peripherals enable HIRC, PLL, HXT, LIRC or LXT clock	192 MHz	44.72	44.30	47.09	75.48	
		160 MHz	40.41	35.78	42.74	66.58	
		144 MHz	33.93	33.65	35.84	63.83	
		120 MHz	28.53	27.99	30.41	57.68	
		12 MHz	4.63	4.14	6.13	32.02	
		32.768 kHz	1.85	1.30	3.5	28.82	
		10 kHz	1.39	0.73	3.01	28.11	

Note:

1. When analog peripheral blocks such as ADC, ACMP, PLL, HIRC, LIRC, HXT and LXT are ON, an additional power consumption should be considered.
2. Based on characterization, not tested in production unless otherwise specified.

Table 9.3-1 Current Consumption in Normal Run Mode

Symbol	Conditions	F_{HCLK}	Typ [*1]	Max [*1][*2]			Unit
			T_A = 25 °C	T_A = -40 °C	T_A = 25 °C	T_A = 105 °C	
I_{DD_IDLE}	Idle mode, all peripherals disable HIRC, PLL, HXT, LIRC or LXT clock	192 MHz	8.92	7.95	10.40	36.28	mA
		160 MHz	7.82	6.92	9.27	35.06	
		144 MHz	7.29	6.41	8.78	34.46	
		120 MHz	6.47	5.63	7.95	33.56	
		12 MHz	2.15	1.5	3.61	28.9	
		32.768 kHz	1.54	0.99	3.11	28.18	
		10 kHz	1.07	0.68	2.63	27.58	
	Idle mode, all peripherals enable HIRC, PLL, HXT, LIRC or LXT clock	192 MHz	30.59	29.51	32.44	59.22	
		160 MHz	25.95	24.95	27.72	54.28	
		144 MHz	23.63	22.67	25.37	51.83	
		120 MHz	20.13	19.25	21.82	48.15	
		12 MHz	3.80	3.1	5.36	30.80	
		32.768 kHz	1.88	1.31	3.49	28.74	
		10 kHz	1.39	1.01	3.01	28.12	

Note:

1. When analog peripheral blocks such as ADC, ACMP, PLL, HIRC, LIRC, HXT and LXT are ON, an additional power consumption should be considered.
2. Based on characterization, not tested in production unless otherwise specified.

Table 9.3-2 Current Consumption in Idle Mode

Symbol	Test Conditions	LXT[*1] 32.768 kHz	LIRC 10 kHz	Typ[*2]	Max[*3][*4]			Unit
				T_A = 25 °C	T_A = -40 °C	T_A = 25 °C	T_A = 105 °C	
I_{DD_DPD}	Deep Power-down mode, all peripherals disable	-	-	0.35	0.15	1.1	18.5	µA
	Deep Power-down mode, RTC enable	V	-	0.81	0.62	1.59	19	
I_{DD_SPD}	Standby Power-down mode, all peripherals disabled	-	-	1.48	0.98	3.45	404	µA
	Standby Power-down mode, RTC enable	V	-	1.95	1.46	3.95	405	
	Standby Power-down mode, RTC enable RTC with LIRC10k	-	V	1.93	1.3	4.17	406	
	Standby Power-down mode with 16 KB RAM retention:	-	-	5.89	1.6	14.15	524	
	Standby Power-down mode with 32 KB RAM retention:	-	-	10.19	2.11	25.46	814	
	Standby Power-down mode with 64 KB RAM retention:	-	-	18.35	3.19	46.86	1374	
	Standby Power-down mode with 128 KB RAM retention:	-	-	34.42	5.31	120.4	2804	
I_{DD_LLPD}	Low leakage Power-down mode, all peripherals disabled	-	-	230	52.65	682	19161	µA
	Low leakage Power-down mode, RTC/WDT/Timer/UART enable	V	-	231	54.23	683	19270	
	Low leakage Power-down mode, RTC/WDT/Timer enable RTC/WDT/Timer with LIRC10k	-	V	230	54.16	681	19301	
	Low leakage Power-down mode, WDT/Timer use LIRC, RTC/UART use LXT	V	V	232	54.32	685	19334	
I_{DD_NPD}	Normal-Power-down mode, all peripherals disable	-	-	672	185	2062	32045	µA
	Normal-Power-down mode, WDT/Timer/UART/RTC enable	V	-	677	187	2090	32167	
	Normal-Power-down mode, WDT/Timer/UART enable RTC/WDT/Timer with LIRC10k	-	V	677	186	2091	32121	
	Normal-Power-down mode, WDT use LIRC, UART/Timer/RTC use LXT	V	V	678	187	2092	32165	

Symbol	Test Conditions	LXT[*1] 32.768 kHz	LIRC 10 kHz	Typ[*2]	Max[*3][*4]			Unit
				T_A = 25 °C	T_A = -40 °C	T_A = 25 °C	T_A = 105 °C	
I_{DD_FWPD}	Fast wake up Power-down mode, all peripherals disable	-	-	793	291	2204	32308	µA
	Fast wake up Power-down mode, WDT/Timer/UART/RTC enable	V	-	797	293	2216	32403	
	Fast wake up Power-down mode, WDT/Timer/UART enable RTC/WDT/Timer with LIRC10k	-	V	796	293	2212	32357	
	Fast wake up Power-down mode, WDT use LIRC, UART/Timer/RTC use LXT	V	V	796	293	2213	32383	

Note:

1. Crystal used: AURUM XF66RU000032C0 with a C_L of 20 pF for L3 gain level
2. V_{DD} = AV_{DD} = 3.3V.
3. Based on characterization, not tested in production unless otherwise specified.
4. When analog peripheral blocks such as ADC and ACMP are ON, an additional power consumption should be considered.
5. Based on characterization, tested in production.

Table 9.3-3 Chip Current Consumption in Power-down Mode

9.3.2 On-Chip Peripheral Current Consumption

- The typical values for T_A= 25 °C and V_{DD} = AV_{DD} = 3.3 V unless otherwise specified.
- All GPIO pins are set as output high of push pull mode without multi-function.
- HCLK is the system clock, f_{HCLK} = 192 MHz, $f_{PCLK0, 1}$ = f_{HCLK}/2.
- The result value is calculated by measuring the difference of current consumption between all peripherals clocked off and only one peripheral clocked on

Peripheral	I_{DD}[*1]	Unit
PDMA	1166.72	µA
EBI	231.78	
SDH0	1233.37	
CRC	63.38	
CCAP	1199.17	
USBH	858.77	
SDH1	59.21	
WDT	45.9	
RTC	127.59	
TMR0	361.64	
TMR1	352.25	
TMR2	314.95	
TMR3	295.1	
CLKO	84.24	
ACMP01	60.76	
I^2C0	28.94	
I^2C1	17.5	
I^2C2	48.25	
QSPI0	575.19	
QSPI1	418.16	
SPI0	560.07	
SPI1	595.36	
SPI2	619	
UART0	272.94	
UART1	208.76	
UART2	263.46	
UART3	170.93	
UART4	211.44	
UART5	169.76	

Peripheral	I_{DD}[*1]	Unit
UART6	168.87	
UART7	192.85	
CAN0	236.13	
CAN1	216.79	
CAN2	211.6	
USB FS OTG	333.04	
EADC0	391.46	
EADC1	308.99	
I^2S0	307.91	
SC0	212.34	
DAC	35.64	
EPWM0	364.43	
EPWM1	333.4	
BPWM0	363.07	
BPWM1	278.82	
QEI0	51.81	
QEI1	34.86	
TRNG	311.47	
ECAP0	66.53	
ECAP1	35.24	

Note:

1. Guaranteed by characterization results, not tested in production.
2. When the ADC is turned on, add an additional power consumption per ADC for the analog part.
3. When the ACMP is turned on, add an additional power consumption per ACMP for the analog part.

Table 9.3-4 Peripheral Current Consumption

9.3.3 Wakeup Time from Low-Power Modes

The wakeup times given in Table 9.3-5 is measured on a wakeup phase with a 12 MHz HIRC oscillator.

Symbol	Parameter	Typ	Unit
t_{WU_IDLE}	Wakeup from IDLE mode	5	cycles
t_{WU_FWPD}	Wakeup from Fast-wakeup power down mode	10	µs
t_{WU_PD}	Wakeup from normal power down mode	15	
t_{WU_LLPD}	Wakeup from low leakage power down mode	58	
t_{WU_SPD}	Wakeup from Standby Power-down mode	200	
t_{WU_DPD}	Deep Power-down mode (DPD)	200	

Note:

1. Based on test during characterization, not tested in production.
2. The wakeup times are measured from the wakeup event to the point in which the application code reads the first

Table 9.3-5 Low-power Mode Wake-up Timings

9.3.4 I/O Current Injection Characteristics

In general, I/O current injection due to external voltages below V_{SS} or above V_{DD} should be avoided during normal product operation. However, the analog compoenent of the MCU is most likely to be affected by the injection current , but it is not easily clarified when abnormal injection accidentally happens. It is recommended to add a Schottky diode (pin to ground or pin to V_{DD}) to pins that include analog function which may potentially injection currents.

Symbol	Parameter	Negative Injection	Positive Injection	Unit	Test Condition
$I_{INJ(PIN)}$	Injected current by a I/O Pin	-0	0	mA	Injected current on nReset pins
		-0	0		Injected current on PF2~PF5, PA10, PA11 and PB0~PB15 for analog input function
		-5	-		Injected current on any 5V tolerance I/O except analog input pin
		-5	+5		Injected current on any other I/O except analog input pin

Table 9.3-6 I/O Current Injection Characteristics

9.3.5 I/O DC Characteristics

9.3.5.1 PIN Input Characteristics

Symbol	Parameter	Min	Typ	Max	Unit	Test Conditions
V_{IL}	Input low voltage (Schmitt trigger)	0	-	0.3*V_{DD}	V	
	Input low voltage (TTL trigger)	0	-	0.7		V_{DD} = 2.7 V
		0	-	0.5		V_{DD} = 1.8 V
V_{IH}	Input high voltage (Schmitt trigger)	0.7*V_{DD}	-	V_{DD}	V	
	Input high voltage (TTL trigger)	1.5	-	V_{DD}		V_{DD} = 3.3 V
		0.8	-	V_{DD}		V_{DD} = 1.8 V
V_{HY}[*1]	Hysteresis voltage of schmitt input	-	0.2*V_{DD}	-	V	
I_{LK}[*2]	Input leakage current	-1		1	µA	V_{SS} < V_{IN} < V_{DD}, Open-drain or input only mode
		-1		1		V_{DD} < V_{IN} < 5 V, Open-drain or input only mode on any other 5v tolerance pins
R_{PU}[*1]	Pull up resistor	45	52	57	kΩ	
R_{PD}[*1]	Pull down resistor	45	52	57	kΩ	

Note:
1. Guaranteed by characterization result, not tested in production.
2. Leakage could be higher than the maximum value, if abnormal injection happens.

Table 9.3-7 I/O Input Characteristics

9.3.5.2 I/O Output Characteristics

Symbol	Parameter	Min	Typ	Max	Unit	Test Conditions
I_{SR}[*1] [*2]	Source current for quasi-bidirectional mode and high level	6.91		7.76	µA	V_{DD} = 3.3 V V_{IN}=(V_{DD}-0.4) V
		6.79		7.59	µA	V_{DD} = 1.8 V V_{IN}=(V_{DD}-0.4) V
	Source current for push-pull mode and high level	16.98		17.40	mA	V_{DD} = 3.3 V V_{IN}=(V_{DD}-0.4) V
		9.85		10.19	mA	V_{DD} = 1.8 V V_{IN}=(V_{DD}-0.4) V
I_{SK}[*1] [*2]	Sinkcurrent for push-pull mode and low level	16.21		16.63	mA	V_{DD} = 3.3 V V_{IN}= 0.4 V
		9.59		10.41	mA	V_{DD} = 1.8 V V_{IN}= 0.4 V
C_{IO}[*1]	I/O pin capacitance	-	5	-	pF	

Note:

1. Guaranteed by characterization result, not tested in production.
2. The I_{SR} and I_{SK} must always respect the abslute maximum current and the sum of I/O, CPU and peripheral must not exceed ΣI_{DD} and ΣI_{SS}.

Table 9.3-8 I/O Output Characteristics

9.3.5.3 nRESET Input Characteristics

Symbol	Parameter	Min	Typ	Max	Unit	Test Conditions
V_{ILR}	Negative going threshold, nRESET	-	-	0.3*V_{DD}	V	
V_{IHR}	Positive going threshold, nRESET	0.7*V_{DD}	-	-	V	
R_{RST}[*1]	Internal nRESET pull up resistor	45	52	47	kΩ	
t_{FR}[*1]	nRESET input filtered pulse time	-	24	-	µs	Normal run and Idle mode
		-	24	-		Fast wake up Power-down mode
		75	-	155		Power-down mode

Note:

1. Guaranteed by characterization result, not tested in production.
2. It is recommended to add a 10 kΩ and 10uF capacitor at nRESET pin to keep reset signal stable.

Table 9.3-9 nRESET Input Characteristics

9.4 AC Electrical Characteristics

9.4.1 48 MHz Internal High Speed RC Oscillator (HIRC48M)

The 48 MHz RC oscillator is calibrated in production.

Symbol.	Parameter	Min	Typ	Max	Unit	Test Conditions
V_{DD}	Operating voltage	1.8	-	3.6	V	
f_{HRC}	Oscillator frequnecy	47.52	48	48.48	MHz	T_A = 25 °C, V_{DD} =1.8 ~ 3.6V
	Frequency drift over temperarure and volatge	-1	-	1	%	T_A = 25 °C, V_{DD} = 1.8 ~ 3.6V
		-4[*1]	-	4[*1]	%	T_A = -40°C ~ +105 °C, V_{DD} = 1.8 ~ 3.6V
I_{HRC}[*1]	Operating current	-	-	230	µA	
T_S[*2]	Stable time	-	-	20	µs	T_A = -40°C ~ +105 °C, V_{DD} = 1.8 ~ 3.6V

Note:

1. Guaranteed by characterization result, not tested in production.
2. Guaranteed by design.

Table 9.4-148 MHz Internal High Speed RC Oscillator(HIRC) Characteristics

9.4.2 12 MHz Internal High Speed RC Oscillator (HIRC)

The 12 MHz RC oscillator is calibrated in production.

Symbol.	Parameter	Min	Typ	Max	Unit	Test Conditions
V_{DD}	Operating voltage	1.8	-	3.6	V	
F_{MRC}	Oscillator frequnecy	11.76	12	12.24	MHz	T_A = 25 °C, V_{DD} = 1.8 ~ 3.6V
	Frequency drift over temperarure and volatge	-1	-	1	%	T_A = 25 °C, V_{DD} = 1.8 ~ 3.6V
		-3[*1]	-	3[*1]	%	T_A = -40°C ~ +105 °C, V_{DD} = 1.8 ~ 3.6V
I_{MRC}[*1]	Operating current	-	-	215	μA	
T_S[*2]	Stable time	-	-	20	μs	T_A = -40°C ~ +105 °C, V_{DD} = 1.8 ~ 3.6V

Note:

1. Guaranteed by characterization result, not tested in production.
2. Guaranteed by design.

Table 9.4-2 12 MHz Internal High Speed RC Oscillator(HIRC) Characteristics

9.4.3 10 kHz Internal Low Speed RC Oscillator (LIRC)

Symbol	Parameter	Min [*1]	Typ	Max [*1]	Unit	Test Conditions
V_{DD}	Operating voltage	1.8	-	3.6	V	
F_{LRC} [*2]	Oscillator frequnecy	-	10	-	kHz	T_A = 25 °C, V_{DD} = 1.8 ~ 3.6V
	Frequency drift over temperarure and volatge	-1	-	1	%	T_A = 25 °C, V_{DD} = 1.8 ~ 3.6V
		-10	-	10	%	T_A=-40~105°C V_{DD}=1.8V~3.6V Without software calibration
I_{LRC}	Operating current	-	0.85	1	μA	V_{DD} = 3.3V
T_S	Stable time	-	500	-	μs	T_A=-40~105°C V_{DD}=1.8V~3.6V

Note:

1. Guaranteed by characterization, not tested in production.
2. The10 kHz low speed RC oscillator can be calibrated by user.
3. Guaranteed by design.
4. The LIRC duty cycle is 16/84, if need 50/50 duty clock output, user should divided by 2 at least.

Table 9.4-3 10 kHz Internal Low Speed RC Oscillator(LIRC) Characteristics

9.4.4 External 4~24 MHz High Speed Crystal/Ceramic Resonator (HXT) Characteristics

The high-speed external (HXT) clock can be supplied with a 4 to 24 MHz crystal/ceramic resonator oscillator. All the information given in this secion are based on characterization results obtained with typical external components. In the application, the external components have to be placed as close as possible to the XT1_IN and XT1_Out pins and must not be connected to any other devices in order to minimize output distortion and startup stabilization time. Refer to the crystal resonator manufacturer for more details on the resonator characteristics (frequency, package, accuracy).

Symbol	Parameter	Min[*1]	Typ	Max[*1]	Unit	Test Conditions
V_{DD}	Operating voltage	1.8	-	3.6	V	
R_f	Internal feedback resister	-	1000	-	kΩ	
f_{HXT}	Oscillator frequency	4	-	24	MHz	
I_{HXT}	Current consumption	-	160	281	µA	4 MHz, Gain = L0
			280	417		12 MHz, Gain = L1
		-	400	540		16 MHz, Gain = L2
		-	600	690		24 Mhz, Gain = L3
T_S	Stable time	-	1300	1974	µs	4 MHz, Gain = L0
			458	605		12 MHz, Gain = L1
		-	326	439		16 MHz, Gain = L2
		-	268	414		24 Mhz, Gain = L3
Du_{HXT}	Duty cycle	40	-	60	%	
Vpp	Peak-to-peak amplitude	-	1.47	-	V	V_{DD} = 3.3V @ f_{HXT} = 12 MHz

Note:

1. Guaranteed by characterization, not tested in production.
2. Recommended crystal resonators for the HXT oscillator in M480 Series MCUs
   2.1 EPSON FA-238A 12MHz (C_L=12pF, ESR= 120 Ω), X1E000341000400
   2.2 EPSON FA-238A 16MHz (C_L=12pF, ESR= 80 Ω), X1E000341003900
   2.3 EPSON FA-238A 24MHz (C_L=12pF, ESR= 60 Ω), X1E000341014800

Table 9.4-4 External 4~24 MHz High Speed Crystal (HXT) Oscillator

Symbol	Parameter	Min [*1]	Typ	Max [*1]	Unit	Test Conditions
Rs	Equivalent series resisotr(ESR)	-	-	150	Ω	Crystal @4 MHz
				50		Crystal @12 MHz
		-	-	40		Crystal @16 MHz
		-	-	40		Crystal @24 MHz

Note:

1. Guaranteed by characterization, not tested in production.

Table 9.4-5 External 4~24 MHz High Speed Crystal Characteristics

9.4.4.1 Typical Crystal Application Circuits

For C1 and C2, it is recommended to use high-quality external ceramic capacitors in 10 pF ~ 25 pF range, designed for high-frequency applications, and selected to match the requirements of the crystal or resonator. The crystal manufacturer typically specifies a load capacitance which is the series combination of C1 and C2. PCB and MCU pin capacitance must be included (8 pF can be used as a rough estimate of the combined pin and board capacitance) when sizing C1 and C2.

CRYSTAL	C1	C2	R1
4 MHz ~ 24 MHz	20 pF	20 pF	without

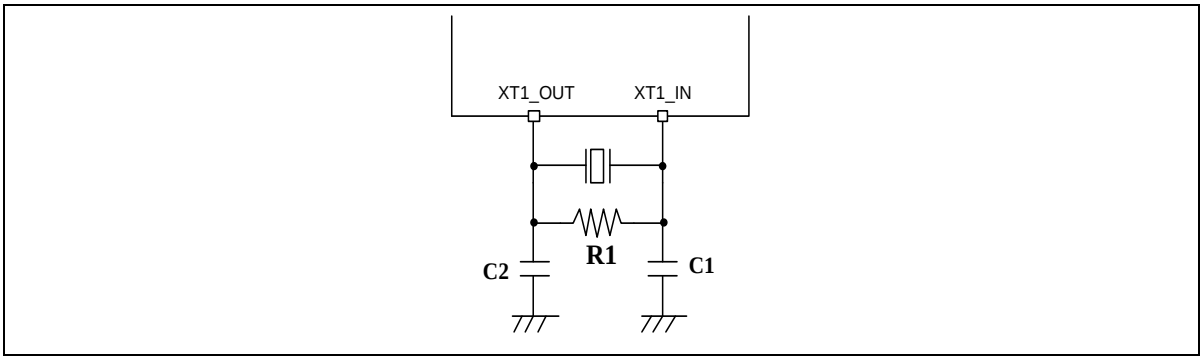

Figure 9.4-1 Typical Crystal Application Circuit

9.4.5 External 4~24 MHz High Speed Clock Input Signal Characteristics

For clock input mode the HXT oscillator is switched off and XT1_IN is a standard input pin to receive external clock. The external clock signal has to respect the Table 9.4-6. The characteristics result from tests performed using a wavefrom generator.

Symbol	Parameter	Min [*1]	Typ	Max [*1]	Unit	Test Conditions
f_{HXT_ext}	External user clock source frequency	4	-	24	MHz	
t_{CHCX}	Clock high time	8	-	-	ns	
t_{CLCX}	Clock low time	8	-	-	ns	
t_{CLCH}	Clock rise time	-	-	10	ns	Low (10%) to high level (90%) rise time
t_{CHCL}	Clock fall time	-	-	10	ns	High (90%) to low level (10%) fall time
Du_{E_HXT}	Duty cycle	40	-	60	%	
V_{IH}	Input high voltage	$0.7*V_{DD}$	-	V_{DD}	V	
V_{IL}	Input low voltage	V_{SS}	-	$0.3*V_{DD}$	V	

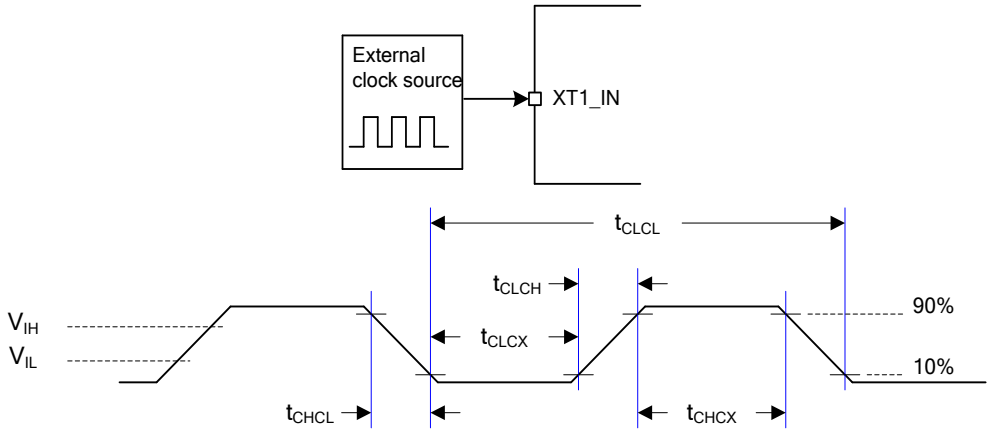

Note:

1. Guaranteed by characterization, not tested in production.

Table 9.4-6 External 4~24 MHz High Speed Clock Input Signal

9.4.6 External 32.768 kHz Low Speed Crystal/Ceramic Resonator (LXT) Characteristics

The low-speed external (LXT) clock can be supplied with a 32.768 kHz crystal/ceramic resonator oscillator. All the information given in this secion are based on characterization results obtained with typical external components. In the application, the external components have to be placed as close as possible to the X32_OUT and X32_IN pins and must not be connected to any other devices in order to minimize output distortion and startup stabilization time. Refer to the crystal resonator manufacturer for more details on the resonator characteristics (frequency, package, accuracy).

Symbol	Parameter	Min [*1]	Typ	Max [*1]	Unit	Test Conditions
V_{DD}	Operation voltage	1.8	-	3.6	V	
T_{LXT}	Temperature range	-40	-	105	°C	
R_f	Internal feedback resistor	-	15	-	MΩ	
F_{LXT}	Oscillator frequency		32.768		kHz	
I_{LXT}	Current consumption	-	0.25	0.49	µA	ESR=35 kΩ, Gain = L1
			0.42	0.8		ESR=35 kΩ, Gain = L4
		-	0.85	1.66		ESR=70 kΩ, Gain = L7
Ts_{LXT}	Stable time	-	1.5	2	s	
Du_{LXT}	Duty cycle	30	-	70	%	

Note:

1. Guaranteed by characterization, not tested in production.
2. Recommended crystal resonators for the LXT oscillator in M480 Series MCUs
   2.1 EPSON FC-13A 32.768 kHz (C_L= 12.5pF, ESR=70 kΩ), X1A000091000100

Table 9.4-7 External 32.768 kHz Low Speed Crystal (LXT) Oscillator

Symbol	Parameter	Min	Typ	Max	Unit	Test Conditions
Rs	Equivalnet Series Resisotr(ESR)	-	35	70	kΩ	Crystal @32.768 kHz

Table 9.4-8 External 32.768 kHz Low Speed Crystal Characteristics

9.4.6.1 Typical Crystal Application Circuits

CRYSTAL	C1	C2	R1
32.768 kHz, ESR < 70 KΩ	20 pF	20 pF	without

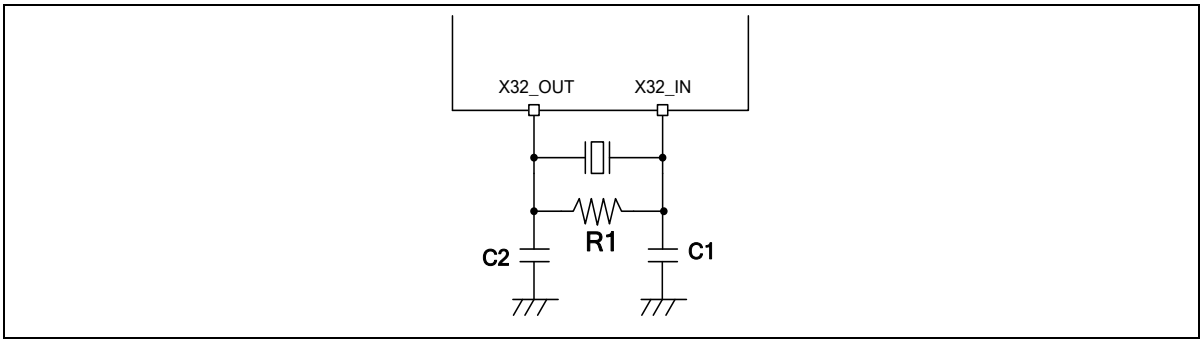

Figure 9.4-2 Typical 32.768 kHz Crystal Application Circuit

9.4.7 External 32.768 kHz Low Speed Clock Input Signal Characteristics

For clock input mode the LXT oscillator is switched off and X32_IN is a standard input pin to receive external clock. The external clock signal has to respect the Table 9.4-9. The characteristics result from tests performed using a wavefrom generator.

Symbol	Parameter	Min [*1]	Typ	Max [*1]	Unit	Test Conditions
f_{LSE_ext}	External clock source frequency	-	32.768	-	kHz	
t_{CHCX}	Clock high time	450	-	-	ns	
t_{CLCX}	Clock low time	450	-	-	ns	
t_{CLCH}	Clock rise time	-	-	50	ns	Low (10%) to high level (90%) rise time
t_{CHCL}	Clock fall time	-	-	50	ns	High (90%) to low level (10%) fall time
Du_{E_LXT}	Duty cycle	30	-	70	%	
Xin_VIH	LXT input pin input high voltage	$0.7*V_{DD}$	-	V_{DD}	V	
Xin_VIL	LXT input pin input low voltage	V_{SS}	-	$0.3*V_{DD}$	V	

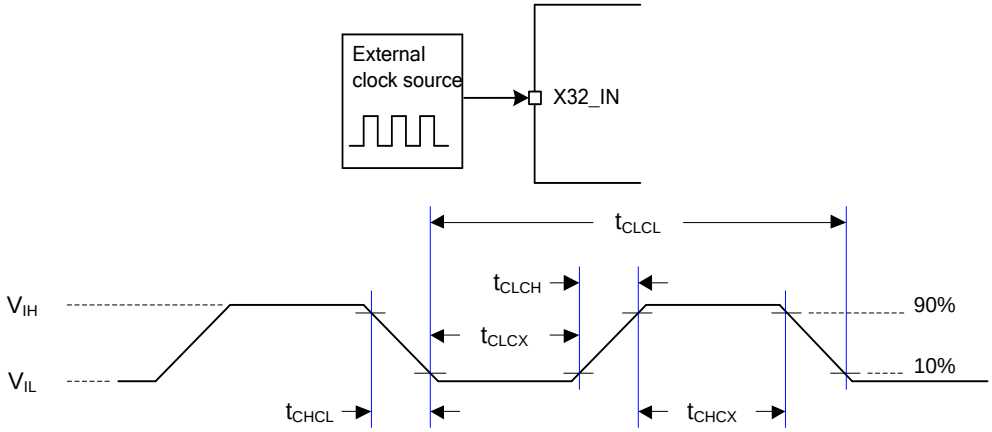

Note:

1. Guaranteed by design, not tested in production

Table 9.4-9 External 32.768 kHz Low Speed Clock Input Signal

9.4.8 PLL Characteristics

Symbol	Parameter	Min[*1]	Typ	Max[*1]	Unit	Test Conditions
f_{PLL_in}	PLL input clock	4	-	24	MHz	
f_{PLL_OUT}	PLL multiplier output clock	50	-	480	MHz	
f_{PLL_REF}	PLL reference clock	4	-	8	MHz	
f_{PLL_VCO}	PLL voltage controlled oscillator	200	-	480	MHz	
T_L	PLL locking time	-	-	100	µs	
Jitter[*2]	Cycle-to-cycle Jitter	-	-	500	ps	
I_{DD}	Power consumption	-	3.56	4.4	mA	V_{DD}=3.3V @ f_{PLL_VCO} = 500 MHz

Note:

1. Guaranteed by characterization, not tested in production
2. Guaranteed by design, not tested in production

Table 9.4-10 PLL Characteristics

9.4.9 I/O AC Characteristics

Symbol	Parameter	Typ.	Max[*1].	Unit	Test Conditions[*2]
$t_{f(IO)out}$	Output high (90%) to low level (10%) fall time (Normal Slew Rate)	-	3.5	ns	C_L = 30 pF, V_{DD} >= 3.6 V
		-	2		C_L = 10 pF, V_{DD} >= 3.6 V
		-	4.5		C_L = 30 pF, V_{DD} >= 2.7 V
		-	3		C_L = 10 pF, V_{DD} >= 2.7 V
		-	8		C_L = 30 pF, V_{DD} >= 1.8 V
		-	5.5		C_L = 10 pF, V_{DD} >= 1.8 V
	Output high (90%) to low level (10%) fall time (High Slew Rate)	-	3		C_L = 30 pF, V_{DD} >= 3.6 V
		-	1.5		C_L = 10 pF, V_{DD} >= 3.6 V
		-	3.5		C_L = 30 pF, V_{DD} >= 2.7 V
		-	2		C_L = 10 pF, V_{DD} >= 2.7 V
		-	6.5		C_L = 30 pF, V_{DD} >= 1.8 V
		-	3.5		C_L = 10 pF, V_{DD} >= 1.8 V
	Output high (90%) to low level (10%) fall time (Fast Slew Rate)	-	2.5		C_L = 30 pF, V_{DD} >= 3.6 V
		-	1.5		C_L = 10 pF, V_{DD} >= 3.6 V
		-	3		C_L = 30 pF, V_{DD} >= 2.7 V
		-	2		C_L = 10 pF, V_{DD} >= 2.7 V
		-	5.5		C_L = 30 pF, V_{DD} >= 1.8 V
		-	3.5		C_L = 10 pF, V_{DD} >= 1.8 V
$t_{r(IO)out}$	Output low (10%) to high level (90%) rise time (Normal Slew Rate)	-	4	ns	C_L = 30 pF, V_{DD} >= 3.6 V
		-	2.5		C_L = 10 pF, V_{DD} >= 3.6 V
		-	4.5		C_L = 30 pF, V_{DD} >= 2.7 V
		-	3		C_L = 10 pF, V_{DD} >= 2.7 V
		-	8		C_L = 30 pF, V_{DD} >= 1.8 V
		-	5.5		C_L = 10 pF, V_{DD} >= 1.8 V
	Output low (10%) to high level (90%) rise time (High Slew Rate)	-	2.5	ns	C_L = 30 pF, V_{DD} >= 3.6 V
		-	1.5		C_L = 10 pF, V_{DD} >= 3.6 V
		-	3		C_L = 30 pF, V_{DD} >= 2.7 V
		-	2		C_L = 10 pF, V_{DD} >= 2.7 V
		-	5		C_L = 30 pF, V_{DD} >= 1.8 V
		-	3		C_L = 10 pF, V_{DD} >= 1.8 V

Symbol	Parameter	Typ.	Max[*1].	Unit	Test Conditions[*2]
	Output low (10%) to high level (90%) rise time (Fasr Slew Rate)	-	2.5	ns	C_L = 30 pF, V_{DD} >= 3.6 V
		-	1.5		C_L = 10 pF, V_{DD} >= 3.6 V
		-	3		C_L = 30 pF, V_{DD} >= 2.7 V
		-	2		C_L = 10 pF, V_{DD} >= 2.7 V
		-	5		C_L = 30 pF, V_{DD} >= 1.8 V
		-	3		C_L = 10 pF, V_{DD} >= 1.8 V
$f_{max(IO)out}$[*3]	I/O maximum frequency (Normal Slew Rate)	-	88.9	MHz	C_L = 30 pF, V_{DD} >= 3.6 V
		-	148.1		C_L = 10 pF, V_{DD} >= 3.6 V
		-	74.1		C_L = 30 pF, V_{DD} >= 2.7 V
		-	111.1		C_L = 10 pF, V_{DD} >= 2.7 V
		-	41.7		C_L = 30 pF, V_{DD} >= 1.8 V
		-	60.6		C_L = 10 pF, V_{DD} >= 1.8 V
	I/O maximum frequency (High Slew Rate)	-	121.2	MHz	C_L = 30 pF, V_{DD} >= 3.6 V
		-	222.2		C_L = 10 pF, V_{DD} >= 3.6 V
		-	102.6		C_L = 30 pF, V_{DD} >= 2.7 V
		-	166.7		C_L = 10 pF, V_{DD} >= 2.7 V
		-	58.0		C_L = 30 pF, V_{DD} >= 1.8 V
		-	102.6		C_L = 10 pF, V_{DD} >= 1.8 V
	I/O maximum frequency (Fastigh Slew Rate)	-	133.3	MHz	C_L = 30 pF, V_{DD} >= 3.6 V
		-	222.2		C_L = 10 pF, V_{DD} >= 3.6 V
		-	111.1		C_L = 30 pF, V_{DD} >= 2.7 V
		-	166.7		C_L = 10 pF, V_{DD} >= 2.7 V
		-	63.5		C_L = 30 pF, V_{DD} >= 1.8 V
		-	102.6		C_L = 10 pF, V_{DD} >= 1.8 V
I_{DIO}[*4]	I/O dynamic current consumption	2.77	-	mA	C_L = 30 pF, V_{DD} = 3.3 V, $f_{(IO)out}$ = 24 MHz
		1.19	-		C_L = 10 pF, V_{DD} = 3.3 V, $f_{(IO)out}$ = 24 MHz
		0.69	-		C_L = 30 pF, V_{DD} = 3.3 V, $f_{(IO)out}$ = 6 MHz
		0.3	-		C_L = 10 pF, V_{DD} = 3.3 V, $f_{(IO)out}$ = 6 MHz

Symbol	Parameter	Typ.	Max[*1].	Unit	Test Conditions[*2]

Note:

1. Guaranteed by characterization result, not tested in production.
2. C_L is a external capacitive load to simulate PCB and device loading.
3. The maximum frequency is defined by $f_{max} = \frac{2}{3 \times (t_f + t_r)}$.
4. The I/O dynamic current consumption is defined by $I_{DIO} = V_{DD} \times f_{IO} \times (C_{IO} + C_L)$

Table 9.4-11 I/O AC Characteristics

9.5 Analog Characteristics

9.5.1 LDO

Symbol	Parameter	Min	Typ	Max	Unit	Test Condition
V_{DD}	Power supply	1.8	-	3.6	V	
V_{LDO}	Output voltage	-	1.26	-	V	
T_A	Temperature	-40	-	105	°C	

Note:

1. It is recommended a 0.1μF bypass capacitor is connected between V_{DD} and the closest V_{SS} pin of the device.
2. For ensuring power stability, a 1μF capacitor must be connected between LDO_CAP pin and the closest V_{SS} pin of the device.

9.5.2 Reset and Power Control Block Characteristics

The parameters in Table 9.5-1 are derived from tests performed under ambient temperature.

Symbol	Parameter	Min	Typ	Max	Unit	Test Conditions
I_{POR}[*1]	POR operating current	-	35	45	µA	AV_{DD} = 3.6V
I_{LVR}[*1]	LVR operating current	-	0.3	0.6		AV_{DD} = 3.6V, Normal mode
I_{BOD}[*1]	BOD operating current	-	30	40		AV_{DD} = 3.6V, Normal mode
		-	1	-		AV_{DD} = 3.6V, Low Power mode
V_{POR}	POR reset voltage	1.38	1.46	1.54	V	-
V_{LVR}	LVR reset voltage	1.45	1.50	1.55		-
V_{BOD}	BOD brown-out detect voltage (Falling edge)	1.45	1.60	1.70		BODVL = 0
		1.65	1.80	1.90		BODVL = 1
		1.85	2.00	2.10		BODVL = 2
		2.05	2.20	2.30		BODVL = 3
		2.25	2.40	2.50		BODVL = 4
		2.45	2.60	2.70		BODVL = 5
		2.65	2.80	2.90		BODVL = 6
		2.85	3.00	3.10		BODVL = 7
	BOD brown-out detect voltage (Rising edge)	1.58	1.68	1.78		BODVL = 0
		1.78	1.88	1.98		BODVL = 1
		1.98	2.08	2.18		BODVL = 2
		2.18	2.28	2.38		BODVL = 3
		2.38	2.48	2.58		BODVL = 4
		2.58	2.68	2.78		BODVL = 5
		2.78	2.88	2.98		BODVL = 6
		2.98	3.08	3.18		BODVL = 7
T_{LVR_SU}[*1]	LVR startup time	-	200	256	µs	-
T_{LVR_RE}[*1]	LVR respond time	-	1	2		Normal mode
T_{BOD_SU}[*1]	BOD startup time	-	1000	-		-
T_{BOD_RE}[*1]	BOD respond time	-	-	100		Normal mode
		-	-	12000		Low Power mode
R_{VDDR}[*1]	V_{DD} rise time rate	10	-	-	µs/V	POR Enabled
R_{VDDF}[*1]	V_{DD} fall time rate	10	-	-		POR Enabled
		300	-	-		LVR Enabled
		666	-	-		BOD 1.6V Enabled, Normal mode

Symbol	Parameter	Min	Typ	Max	Unit	Test Conditions
		285	-	-		BOD 1.8V Enabled, Normal mode
		180	-	-		BOD 2.0V Enabled, Normal mode
		133	-	-		BOD 2.2V Enabled, Normal mode
		105	-	-		BOD 2.4V Enabled, Normal mode
		85	-	-		BOD 2.6V Enabled, Normal mode
		75	-	-		BOD 2.8V Enabled, Normal mode
		65				BOD 3.0V Enabled, Normal mode

Note:

1. Guaranteed by characterization, not tested in production.
2. Design for specified applcaiton.

Table 9.5-1 Reset and Power Control Unit

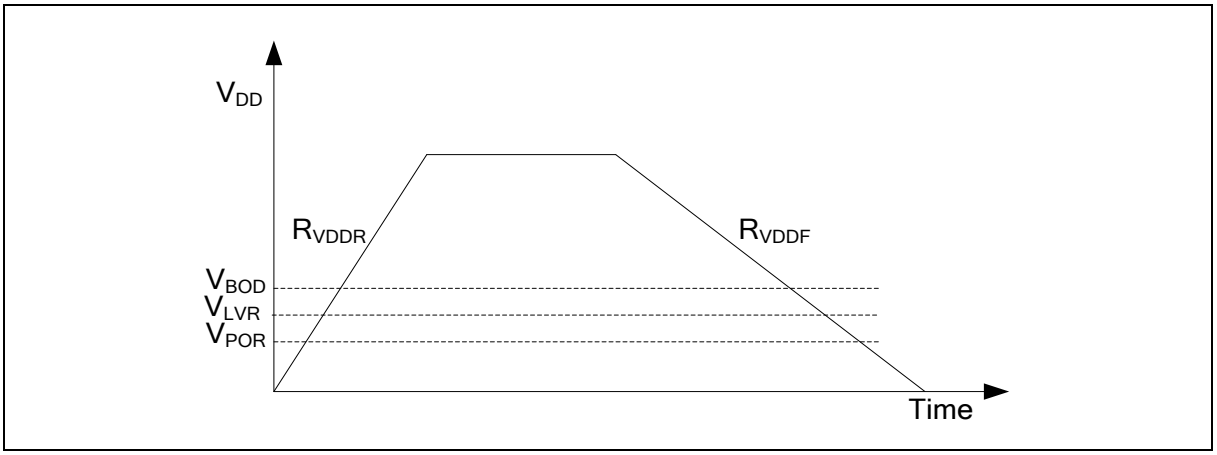

Figure 9.5-1 Power Ramp Up/Down Condition

9.5.3 12-bit SAR ADC

9.5.3.1 ADC0 Characteristics

Fast Speed Channel

Symbol	Parameter	Min	Typ	Max	Unit	Test Conditions
T_A	Temperature	-40	-	105	°C	
AV_{DD}	Analog operating voltage	1.8	-	3.6	V	$AV_{DD} = V_{DD}$
V_{REF}	Reference voltage	1.6	-	AV_{DD}	V	
V_{IN}	ADC channel input voltage	0	-	V_{REF}	V	
I_{ADC}[*1]	Operating current (AV_{DD} current) (Enable ADC and disable all other analog modules)	599	-	629	µA	$AV_{DD} = V_{DD} = V_{REF} = 3.3V$ ADC Clock Rate = 80 MHz High speed channel
N_R	Resolution	12			Bit	
F_{ADC}	ADC Clock frequency	TBD	-	80	MHz	$F_{ADC} = 1/T_{ADC}$
T_{SMP}	Sampling Time		2		$1/F_{ADC}$	
T_{CONV}	Conversion time		14		$1/F_{ADC}$	$T_{CONV} = T_{SMP} + 12$
F_{SPS}	Sampling Rate	TBD	-	5	MSPS	High speed channel
T_{EN}	Enable to ready time	TBD	-	-	µs	
INL	Integral Non-Linearity Error	-4.42	-	2.4	LSB	$V_{REF} = AV_{DD} = 3.3V$ package with V_{REF} pin
DNL	Differential Non-Linearity Error	-1	-	4.62	LSB	$V_{REF} = AV_{DD} = 3.3V$ package with V_{REF} pin
E_G	Gain error	0.5	-	2.06	LSB	$V_{REF} = AV_{DD} = 3.3V$ package with V_{REF} pin
E_O	Offset error	0	-	1.81	LSB	$V_{REF} = AV_{DD} = 3.3V$ package with V_{REF} pin
E_A	Absolute Error	3.69	-	6.37	LSB	$V_{REF} = AV_{DD} = 3.3V$ package with V_{REF} pin
C_{IN}[*1]	Internal Capacitance	-	5	-	pF	

Note:

1. Guaranteed by characterization result, not tested in production.
2. R_{EX} max formula is used to determine the maximum external impedance allowed for 1/4 LSB error. N = 12 (based on 12-bit resoluton) and k is the number of sampling clocks (T_{SMP}). C_{EX} represents the capacitance of PCB and pad and is combined with R_{EX} into a low-pass filter. Once the R_{EX} and C_{EX} values are too large, it is possible to filter the real signal and reduce the ADC accuracy.

$$R_{EX} = \frac{k}{f_{ADC} \times C_{IN} \times \ln(2^{N+2})} - R_{IN}$$

Low Speed Channel

Symbol	Parameter	Min	Typ	Max	Unit	Test Conditions
T_A	Temperature	-40	-	105	°C	
AV_{DD}	Analog operating voltage	1.8	-	3.6	V	$AV_{DD} = V_{DD}$
V_{REF}	Reference voltage	1.6	-	AV_{DD}	V	
V_{IN}	ADC channel input voltage	0	-	V_{REF}	V	
I_{ADC}[*1]	Operating current (AV_{DD} current) (Enable ADC and disable all other analog modules)	163	-	270	µA	$AV_{DD} = V_{DD} = V_{REF}$ = 1.62V ~ 3.3V ADC Clock Rate = 32 MHz High speed channel
N_R	Resolution	12			Bit	
F_{ADC}	ADC Clock frequency	TBD	-	80	MHz	$F_{ADC} = 1/T_{ADC}$
T_{SMP}	Sampling Time		2		$1/F_{ADC}$	
T_{CONV}	Conversion time		14		$1/F_{ADC}$	$T_{CONV} = T_{SMP} + 12$
F_{SPS}	Sampling Rate	0.1	-	2	MSPS	Low speed channel **Note:** it needs more extend sampling time to slow down the sampling rate.
T_{EN}	Enable to ready time	TBD	-	-	µs	
INL	Integral Non-Linearity Error	-2.17	-	1.89	LSB	$V_{REF} = AV_{DD}$ = 1.62V ~ 3.3V package with V_{REF} pin
DNL	Differential Non-Linearity Error	-1	-	1.87	LSB	$V_{REF} = AV_{DD}$ = 1.62V ~ 3.3V package with V_{REF} pin
E_G	Gain error	0.31	-	2.56	LSB	$V_{REF} = AV_{DD}$ = 1.62V ~ 3.3V package with V_{REF} pin
E_O	Offset error	-0.31	-	2.19	LSB	$V_{REF} = AV_{DD}$ = 1.62V ~ 3.3V package with V_{REF} pin
E_A	Absolute Error	-3.5	-	5.87	LSB	$V_{REF} = AV_{DD}$ = 1.62V ~ 3.3V package with V_{REF} pin
C_{IN}[*1]	Internal Capacitance	-	5	-	pF	

Note:

1. Guaranteed by characterization result, not tested in production.
2. R_{EX} max formula is used to determine the maximum external impedance allowed for 1/4 LSB error. N = 12 (based on 12-bit resoluton) and k is the number of sampling clocks (T_{SMP}). C_{EX} represents the capacitance of PCB and pad and is combined with R_{EX} into a low-pass filter. Once the R_{EX} and C_{EX} values are too large, it is possible to filter the real signal and reduce the ADC accuracy.

$$R_{EX} = \frac{k}{f_{ADC} \times C_{IN} \times \ln(2^{N+2})} - R_{IN}$$

9.5.3.2 ADC1 Characteristics

Fast Speed Channel

Symbol	Parameter	Min	Typ	Max	Unit	Test Conditions
T_A	Temperature	-40	-	105	°C	
AV_{DD}	Analog operating voltage	1.8	-	3.6	V	$AV_{DD} = V_{DD}$
V_{REF}	Reference voltage	1.6	-	AV_{DD}	V	
V_{IN}	ADC channel input voltage	0	-	V_{REF}	V	
I_{ADC}[*1]	Operating current (AV_{DD} current) (Enable ADC and disable all other analog modules)	596	-	627	µA	$AV_{DD} = V_{DD} = V_{REF}$ = 3.3V ADC Clock Rate = 80 MHz High speed channel
N_R	Resolution	12			Bit	
F_{ADC}	ADC Clock frequency	TBD	-	80	MHz	$F_{ADC} = 1/T_{ADC}$
T_{SMP}	Sampling Time		2		$1/F_{ADC}$	
T_{CONV}	Conversion time		14		$1/F_{ADC}$	$T_{CONV} = T_{SMP} + 12$
F_{SPS}	Sampling Rate	TBD	-	5	MSPS	High speed channel
T_{EN}	Enable to ready time	TBD	-	-	µs	
INL	Integral Non-Linearity Error	-6.22	-	2.17	LSB	$V_{REF} = AV_{DD}$ = 3.3V package with V_{REF} pin
DNL	Differential Non-Linearity Error	-1	-	6.62	LSB	$V_{REF} = AV_{DD}$ = 3.3V package with V_{REF} pin
E_G	Gain error	1.06	-	2.94	LSB	$V_{REF} = AV_{DD}$ = 3.3V package with V_{REF} pin
E_O	Offset error	0	-	1.75	LSB	$V_{REF} = AV_{DD}$ = 3.3V package with V_{REF} pin
E_A	Absolute Error	3	-	5.69	LSB	$V_{REF} = AV_{DD}$ = 3.3V package with V_{REF} pin
C_{IN}[*1]	Internal Capacitance	-	5	-	pF	

Note:

1. Guaranteed by characterization result, not tested in production.
2. R_{EX} max formula is used to determine the maximum external impedance allowed for 1/4 LSB error. N = 12 (based on 12-bit resoluton) and k is the number of sampling clocks (T_{SMP}). C_{EX} represents the capacitance of PCB and pad and is combined with R_{EX} into a low-pass filter. Once the R_{EX} and C_{EX} values are too large, it is possible to filter the real signal and reduce the ADC accuracy.

$$R_{EX} = \frac{k}{f_{ADC} \times C_{IN} \times \ln(2^{N+2})} - R_{IN}$$

Low Speed Channel

Symbol	Parameter	Min	Typ	Max	Unit	Test Conditions
T_A	Temperature	-40	-	105	°C	
AV_{DD}	Analog operating voltage	1.8	-	3.6	V	$AV_{DD} = V_{DD}$
V_{REF}	Reference voltage	1.6	-	AV_{DD}	V	
V_{IN}	ADC channel input voltage	0	-	V_{REF}	V	
I_{ADC}[*1]	Operating current (AV_{DD} current) (Enable ADC and disable all other analog modules)	162	-	269	µA	$AV_{DD} = V_{DD} = V_{REF}$ = 1.62V ~ 3.3V ADC Clock Rate = 32 MHz High speed channel
N_R	Resolution	12			Bit	
F_{ADC}	ADC Clock frequency	1.5	-	32	MHz	$F_{ADC} = 1/T_{ADC}$
T_{SMP}	Sampling Time		2		$1/F_{ADC}$	
T_{CONV}	Conversion time		14		$1/F_{ADC}$	$T_{CONV} = T_{SMP} + 12$
F_{SPS}	Sampling Rate	0.1	-	2	MSPS	Low speed channel
T_{EN}	Enable to ready time	TBD	-	-	µs	
INL	Integral Non-Linearity Error	-1.96	-	1.22	LSB	$V_{REF} = AV_{DD}$ = 1.62V ~ 3.3V package with V_{REF} pin
DNL	Differential Non-Linearity Error	-1	-	1.94	LSB	$V_{REF} = AV_{DD}$ = 1.62V ~ 3.3V package with V_{REF} pin
E_G	Gain error	0.62	-	3.19	LSB	$V_{REF} = AV_{DD}$ = 1.62V ~ 3.3V package with V_{REF} pin
E_O	Offset error	-0.44	-	2.62	LSB	$V_{REF} = AV_{DD}$ = 1.62V ~ 3.3V package with V_{REF} pin
E_A	Absolute Error	2.81	-	6.19	LSB	$V_{REF} = AV_{DD}$ = 1.62V ~ 3.3V package with V_{REF} pin
C_{IN}[*1]	Internal Capacitance	-	5	-	pF	

Note:

1. Guaranteed by characterization result, not tested in production.
2. R_{EX} max formula is used to determine the maximum external impedance allowed for 1/4 LSB error. N = 12 (based on 12-bit resoluton) and k is the number of sampling clocks (T_{SMP}). C_{EX} represents the capacitance of PCB and pad and is combined with R_{EX} into a low-pass filter. Once the R_{EX} and C_{EX} values are too large, it is possible to filter the real signal and reduce the ADC accuracy.

$$R_{EX} = \frac{k}{f_{ADC} \times C_{IN} \times \ln(2^{N+2})} - R_{IN}$$

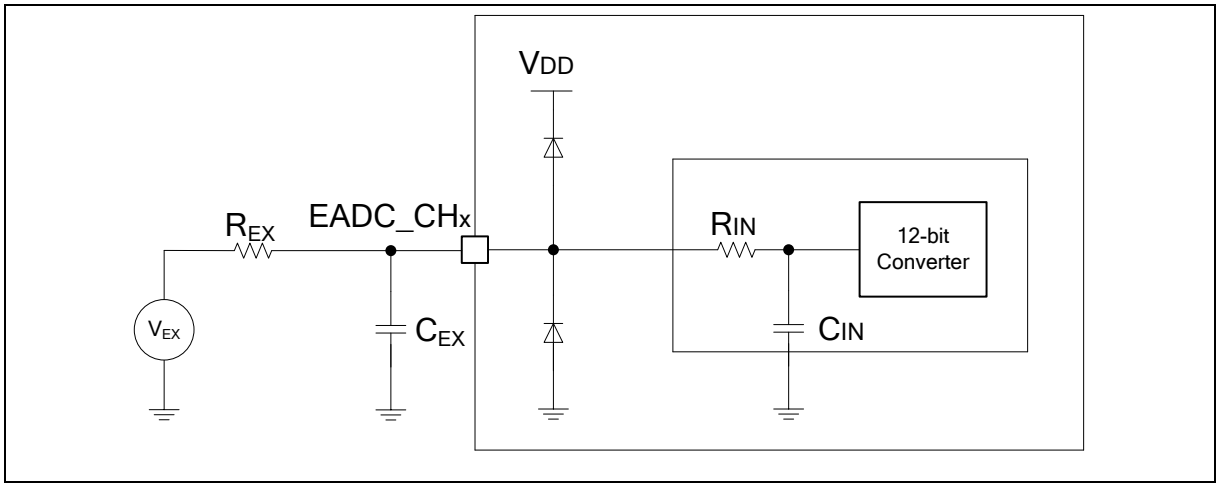

Note: Injection current is a important topic of ADC accuracy. Injecting current on any analog input pins should be avoided to protect the conversion being performed on another analog input. It is recommended to add Schottky diodes (pin to ground and pin to power) to analog pins which may potentially inject currents.

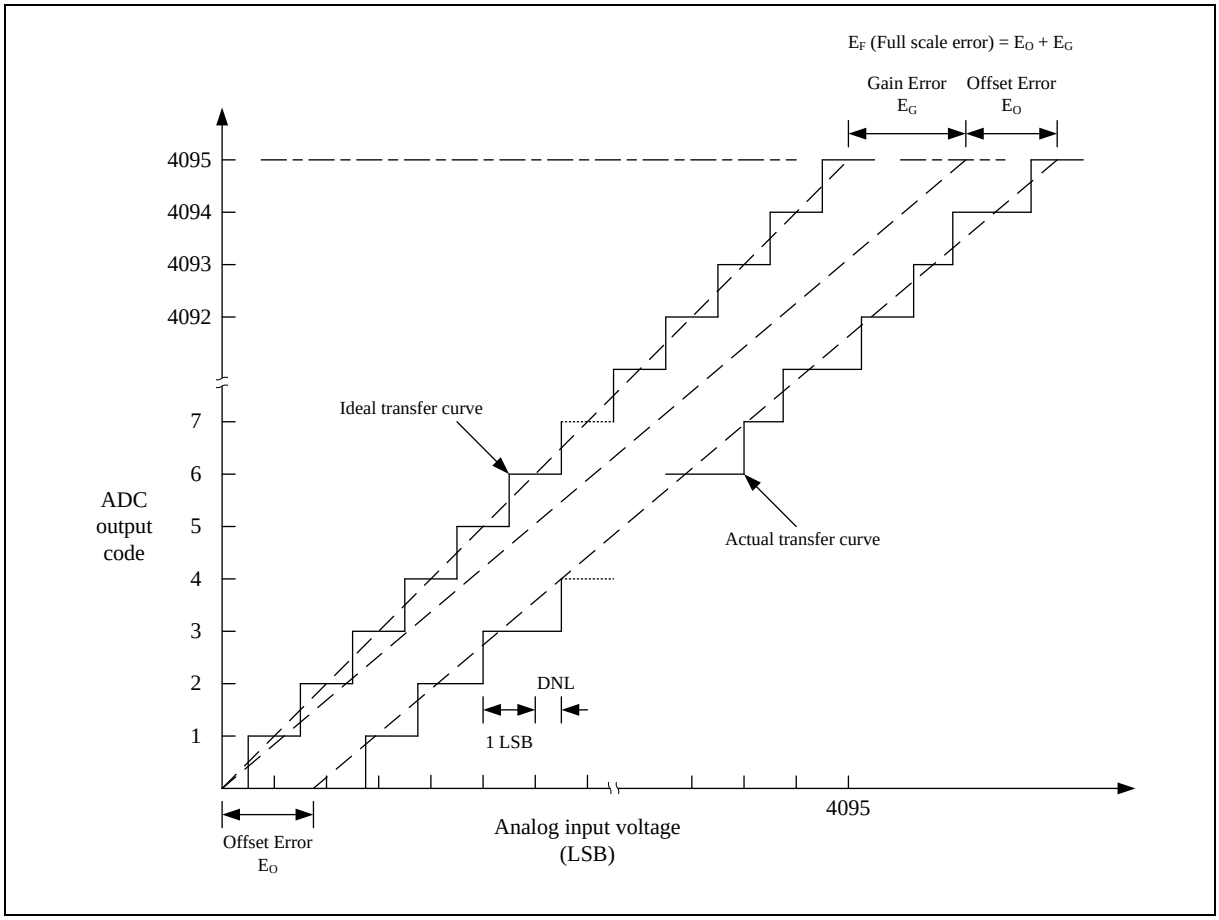

Note: The INL is the peak difference between the transition point of the steps of the calibrated transfer curve and the ideal transfer curve. A calibrated transfer curve means it has calibrated the offset and gain error from the actual transfer curve.

9.5.4 Temperature Sensor

Symbol	Parameter	Min	Typ	Max	Unit
V_{DD}	Operating Voltage	1.8		3.6	V
T_A	Temperature Range	-40		105	°C
I_{TEMP}	Current Consumption [*3]		16		µA
T_c	Temperature Coefficient [*3]	-1.77	-1.82	-1.84	mV/°C
V_{os}	Offset Voltage when T_A = 0°C [*3]	710.2		716.8	mV
t_S	Stable time[*2]		1		µs
T_{S_temp}	ADC sampling time when reading the temperature (5pF cap load) [*1]		3		µs

Note:

1. V_{TEMP} (mV) = T_c (mV/°C) x Temperature (°C) + V_{os} (mV)
2. Guaranteed by design, not tested in production
3. Guaranteed by characteristic, not tested in production

9.5.5 Analog Comparator Controller (ACMP)

The maximum values are obtained for V_{DD} = 3.6 V and maximum ambient temperature (T_A), and the typical values for T_A= 25 °C and V_{DD} = 3.3 V unless otherwise specified.

Symbol	Parameter	Min	Typ	Max	Unit	Test Conditions
AV_{DD}	Analog supply voltage	1.8	-	3.6	V	V_{DD} = AV_{DD}
T_A	Temperature	-40	-	105	°C	
I_{ACMP}[*2]	ACMP operating current	-	75	90	µA	MODESEL = 11
		-	10	30		MODESEL = 10
		-	3	10		MODESEL = 01
		-	1.2	6		MODESEL = 00
V_{CM}[*2]	Input common mode voltage range	0.1	1/2 AV_{DD}	AV_{DD} -0.1		
V_{DI}[*2]	Differential input voltage sensitivity	-	10	-	mV	Hysteresis disable (HYSSEL = 00)
V_{offset}[*2]	Input offset voltage	-	5	10	mV	Hysteresis disable (HYSSEL = 00)
V_{hys}[*2]	Hysteresis window	-	10	20	mV	HYSSEL = 01
			20	40		HYSSEL = 10
			30	60		HYSSEL = 11
A_v[*1]	DC voltage Gain	43	70	-	dB	
T_d[*2]	Propagation delay	-	180	250	ns	MODESEL = 11
		-	350	600		MODESEL = 10
		-	750	2000		MODESEL = 01
		-	1600	4500		MODESEL = 00
T_{Setup}[*2]	Setup time	-	250 + T_d	450 + T_d	ns	
A_{CRV}[*2]	CRV output voltage	-5	-	5	%	AV_{DD} x (1/6+CRVCTL/24)
R_{CRV}[*2]	Unit resistor value	-	4.2	-	kΩ	
T_{SETUP_CRV}[*2]	Setup time	-	-	TBD	µs	CRV output voltage settle to ±5%
I_{DD_CRV}[*2]	Operating current	-	32.7	-	µA	

Note:

1. Guaranteed by design, not tested in production
2. Guaranteed by characteristic, not tested in production

Table 9.5-2 ACMP Characteristics

9.5.6 Digital to Analog Converter (DAC)

The maximum values are obtained for V_{DD} = 3.6 V and maximum ambient temperature (T_A), and the typical values for T_A= 25 °C and V_{DD} = 3.3 V unless otherwise specified.

Symbol	Parameter	Min	Typ	Max	Unit	Test Condition
AV_{DD}	Analog supply voltage	1.8	-	3.6	V	-
N_R	Resolution		12		bit	-
V_{REF}	Reference supply voltage	1.5	-	AV_{DD}	V	$V_{REF} \le AV_{DD}$
DNL[*2]	Differential non-linearity error	-	-	±2	LSB	12-bit mode
		-	-	±0.5	LSB	8-bit mode
INL[*2]	Integral non-linearity error	-	-	±4	LSB	12-bit mode
		-	-	±1	LSB	8-bit mode
OE[*2]	Offset Error	-	-	±30	LSB	12-bit mode DACOUT buffer ON
		-	-	±4	LSB	12-bit mode DACOUT buffer OFF
		-	-	±2	LSB	8-bit mode
GE[*2]	Gain Error	-	-	±8	LSB	12-bit mode DACOUT buffer ON
		-	-	±4	LSB	12-bit mode DACOUT buffer OFF
		-	-	±2	LSB	8-bit mode
AE[*2]	Absolute Error	-	-	±10	LSB	12-bit mode DACOUT buffer ON
		-	-	±4	LSB	12-bit mode DACOUT buffer OFF
		-	-	±2	LSB	8-bit mode
-	Monotonic		10-bit guaranteed		-	-
V_O[*1]	Output Voltage	0.2		AV_{DD} - 0.2	V	DACOUT buffer ON
		1*LSB		V_{REF} - 1*LSB		DACOUT buffer OFF
R_{LOAD}[*2] [*3]	Resistive load	7.5	-	-	kΩ	DACOUT buffer ON
R_O[*2]	Output impedance	-	10	12	kΩ	DACOUT buffer OFF
C_{LOAD}[*2] [*4]	Capacitive load	-	-	50	pF	DACOUT buffer ON
				20	pF	DACOUT buffer OFF

Symbol	Parameter	Min	Typ	Max	Unit	Test Condition
I_{DAC_AVDD}[*2]	DAC operating current on AV_{DD} supply	-	340	550	µA	AV_{DD} = 3.6V, no load, lowest code (0x000)
						AV_{DD} = 3.6V, no load, middle code (0x800)
$I_{DAC_V}REF$[*2]	DAC operating current on V_{REF} supply	-	-	160	µA	V_{REF} =3.6V, no load, middle code (0x800)
T_B[*2]	Settling Time	-	5	6	µs	Full scale: for a 12-bit input code transition between the lowest and the highest input codes when DAC_OUT reaches final value +/-1 LSB, $C_{LOAD} \leq 50pF$, $R_{LOAD} \geq 5k\Omega$
F_S	Update Rate	-	-	1	M_{SPS}	Max. frequency for a correct DAC_OUT change from core i to i+1LSB, $C_{LOAD} \leq 50pF$, $R_{LOAD} \geq 5k\Omega$
T_{WAKEUP}	Wake-up Time	-	9	15	µs	Wakeup time from OFF state. Input code between lowest and highest possible codes. DAC clock source = 1 MHz
PSRR[*1]	Power Supply Rejection Ratio	-	-60	-40	dB	No R_{LOAD}, C_{LOAD} = 50pF

Note:

1. Guaranteed by design, not tested in production
2. Guaranteed by characteristic, not tested in production.
3. Resistive load between DACOUT and AV_{SS}.
4. Capacitive load at DACOUT pin.

9.5.7 Internal Voltage Reference

The maximum values are obtained for V_{DD} = 3.6 V and maximum ambient temperature (T_A), and the typical values for T_A= 25 °C and V_{DD} = 3.3 V unless otherwise specified.

Symbol	Parameter	Min	Typ	Max	Unit	Comments
V_{REF_INT}	Internal reference voltage	1.55	1.6	1.65	V	AV_{DD} >= 2.0 V
		1.95	2.0	2.05		AV_{DD} >= 2.2 V
		2.45	2.5	2.55		AV_{DD} >= 2.7 V
		2.95	3.0	3.05		AV_{DD} >= 3.2 V
T_s[*1]	Stable time	-	0.5	0.8	ms	C_L =4.7 uF, V_{REF} initial=0
		-	9.3	13	ms	C_L =4.7 uF, V_{REF} initial=3.6
		-	24	180	us	C_L =1 uF, V_{REF} initial=0
		-	2	2.6	ms	C_L =1 uF, V_{REF} initial=3.6

Note:

1. Guaranteed by characterization, not tested in production

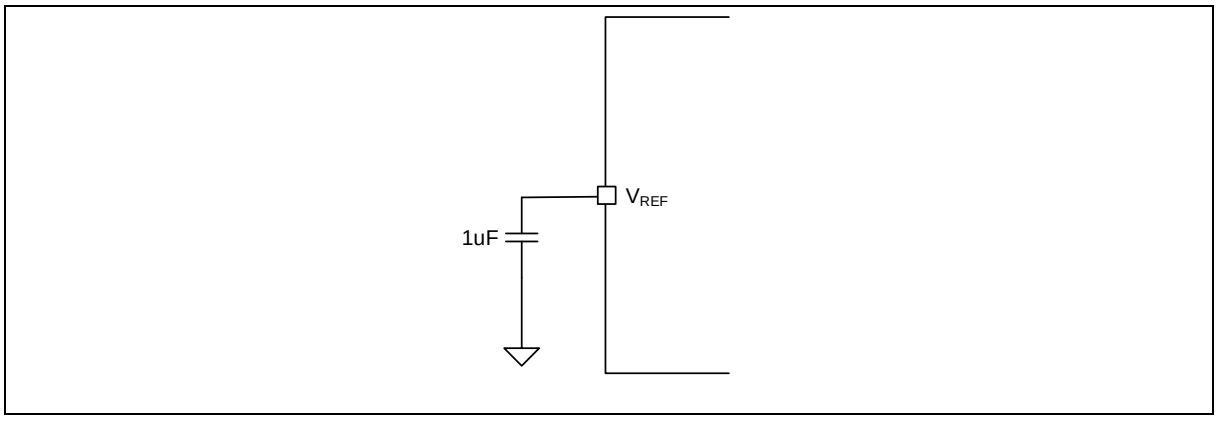

Figure 9.5-2 Typical Connection with Internal Voltage Reference

9.6 Communications Characteristics

9.6.1 SPI Dynamic Characteristics

Symbol	Parameter	Specificaitons[*1]				Test Conditions
		Min	Typ	Max	Unit	
F_{SPICLK} 1/ T_{SPICLK}	SPI clock frequency	-	-	96	MHz	3.0 V ≤ V_{DD} ≤ 3.6 V, C_L = 30 pF
				96		2.7 V ≤ V_{DD} ≤ 3.6 V, C_L = 30 pF
		-	-	96		1.8 V ≤ V_{DD} ≤ 3.6 V, C_L = 30 pF
t_{CLKH}	Clock output High time	T_{SPICLK} / 2			ns	
t_{CLKL}	Clock output Low time	T_{SPICLK} / 2			ns	
t_{DS}	Data input setup time	0	-	-	ns	
t_{DH}	Data input hold time	2	-	-	ns	
t_V	Data output valid time	-	-	2	ns	3.0 V ≤ V_{DD} ≤ 3.6 V, C_L = 30 pF
				2	ns	2.7 V ≤ V_{DD} ≤ 3.6 V, C_L = 30 pF
		-	-	2.2	ns	1.8 V ≤ V_{DD} ≤ 3.6 V, C_L = 30 pF

Note:

1. Guaranteed by design.

Table 9.6-1 SPI Master Mode Characteristics

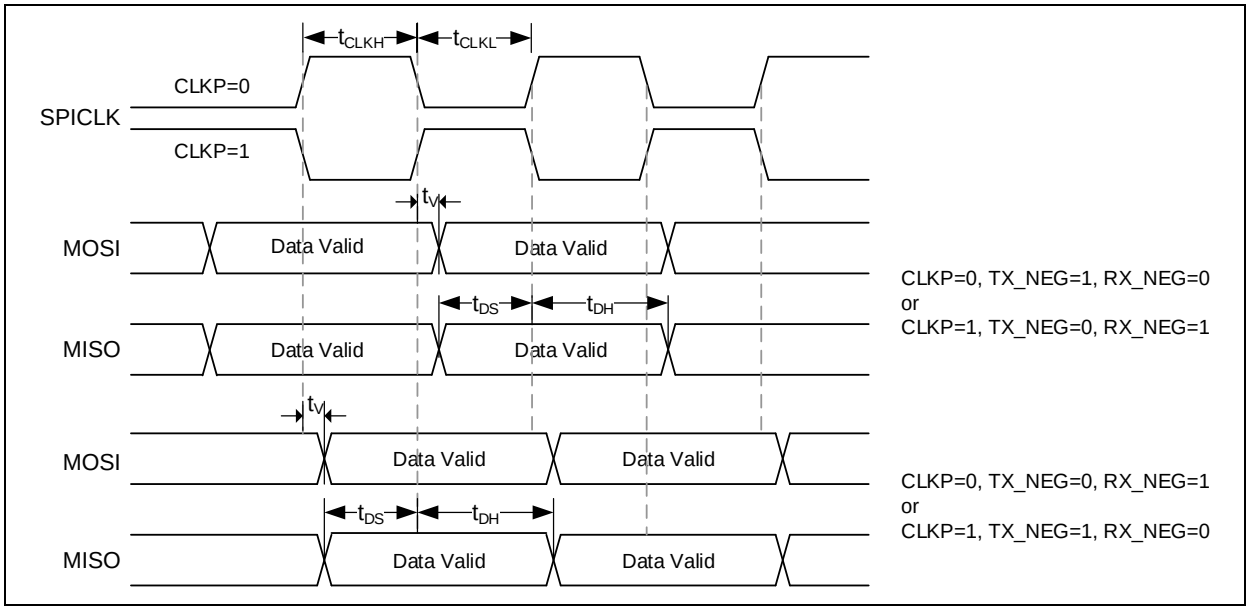

Figure 9.6-1 SPI Master Mode Timing Diagram

Symbol	Parameter	Specificaitons[*1]				Test Conditions
		Min	Typ	Max	Unit	
F_{SPICLK} $1/ T_{SPICLK}$	SPI clock frequency	-	-	45	MHz	3.0 V ≤ V_{DD} ≤ 3.6 V, C_L = 30 pF
				45		2.7 V ≤ V_{DD} ≤ 3.6 V, C_L = 30 pF
		-	-	33		1.8 V ≤ V_{DD} ≤ 3.6 V, C_L = 30 pF
t_{CLKH}	Clock output High time	T_{SPICLK} / 2			ns	
t_{CLKL}	Clock output Low time	T_{SPICLK} / 2			ns	
t_{SS}	Slave select setup time	1 T_{SPICLK} + 2ns	-	-	ns	3.0 V ≤ V_{DD} ≤ 3.6 V, C_L = 30 pF
		1 T_{SPICLK} + 2ns				2.7 V ≤ V_{DD} ≤ 3.6 V, C_L = 30 pF
		1 T_{SPICLK} + 3ns	-	-		1.8 V ≤ V_{DD} ≤ 3.6 V, C_L = 30 pF
t_{SH}	Slave select hold time	1 T_{SPICLK}	-	-	ns	
t_{DS}	Data input setup time	0	-	-	ns	
t_{DH}	Data input hold time	2	-	-	ns	
t_V	Data output valid time	-	-	11	ns	3.0 V ≤ V_{DD} ≤ 3.6 V, C_L = 30 pF
				11		2.7 V ≤ V_{DD} ≤ 3.6 V, C_L = 30 pF
		-	-	15		1.8 V ≤ V_{DD} ≤ 3.6 V, C_L = 30 pF

Note:

1. Guaranteed by design.

Table 9.6-2 SPI Slave Mode Characteristics

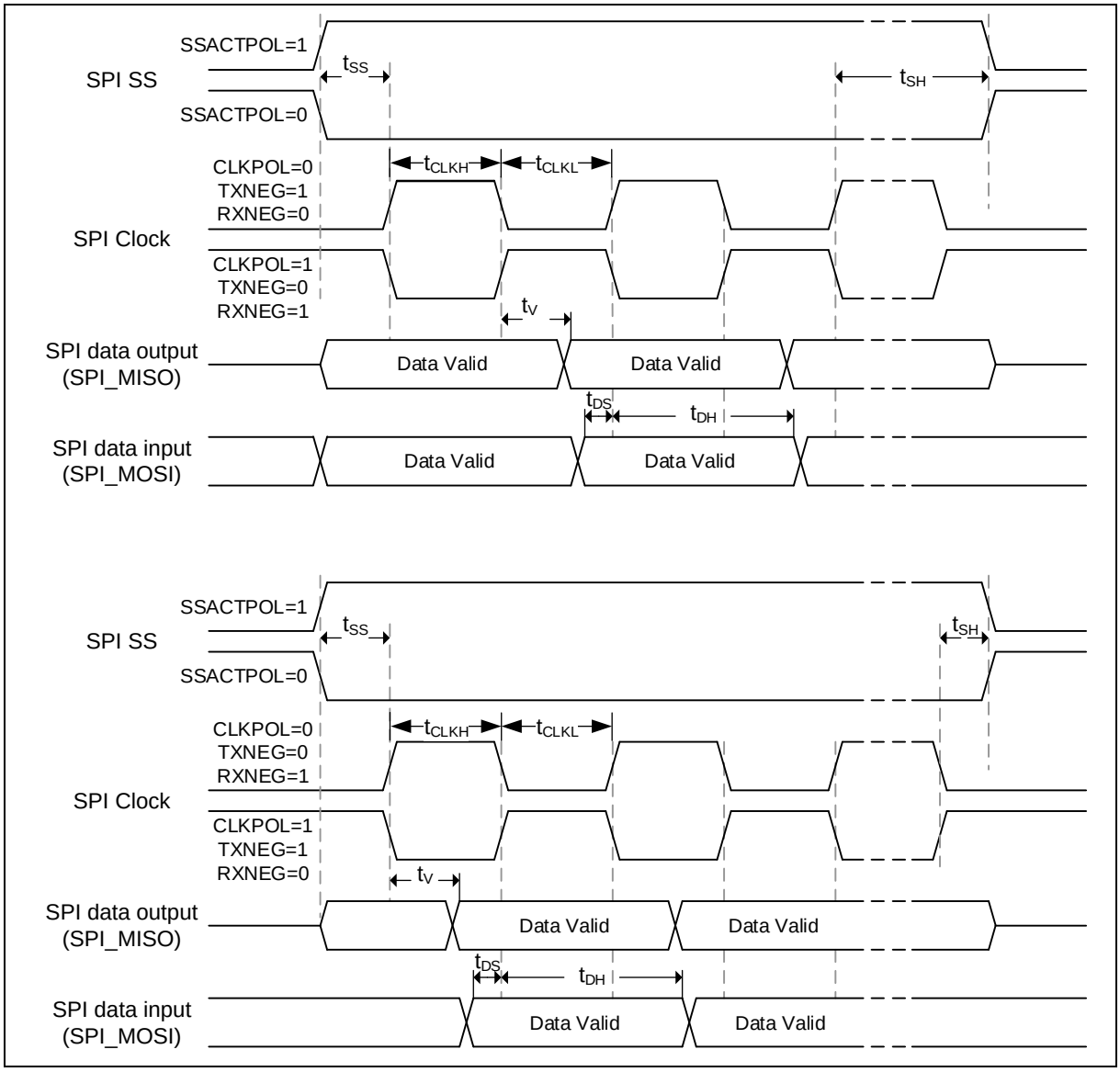

Figure 9.6-2 SPI Slave Mode Timing Diagram

9.6.2 SPI - I²S Dynamic Characteristics

Symbol	Parameter	Min [*1]	Max [*1]	Unit	Test Conditions
$t_{w(CKH)}$	I²S clock high time	80	-	ns	Master f_{PCLK} = 48 MHz, data: 24 bits, audio frequency = 128 kHz
$t_{w(CKL)}$	I²S clock low time	80	-		
$t_{v(WS)}$	WS valid time	2	6		Master mode
$t_{h(WS)}$	WS hold time	2	-		Master mode
$t_{su(WS)}$	WS setup time	24	-		Slave mode
$t_{h(WS)}$	WS hold time	0	-		Slave mode
$DuCy_{(SCK)}$	I²S slave input clock duty cycle	30	70	%	Slave mode
$t_{su(SD_MR)}$	Data input setup time	10	-	ns	Master receiver
$t_{su(SD_SR)}$		7	-		Slave receiver
$t_{h(SD_MR)}$	Data input hold time	7	-		Master receiver
$t_{h(SD_SR)}$		4	-		Slave receiver
$t_{v(SD_ST)}$	Data output valid time	-	25		Slave transmitter (after enable edge)
$t_{h(SD_ST)}$	Data output hold time	4	-		Slave transmitter (after enable edge)
$t_{v(SD_MT)}$	Data output valid time	-	4		Master transmitter (after enable edge)
$t_{h(SD_MT)}$	Data output hold time	0	-		Master transmitter (after enable edge)

Note:

1. Guaranteed by design.

Table 9.6-3 I²S Characteristics

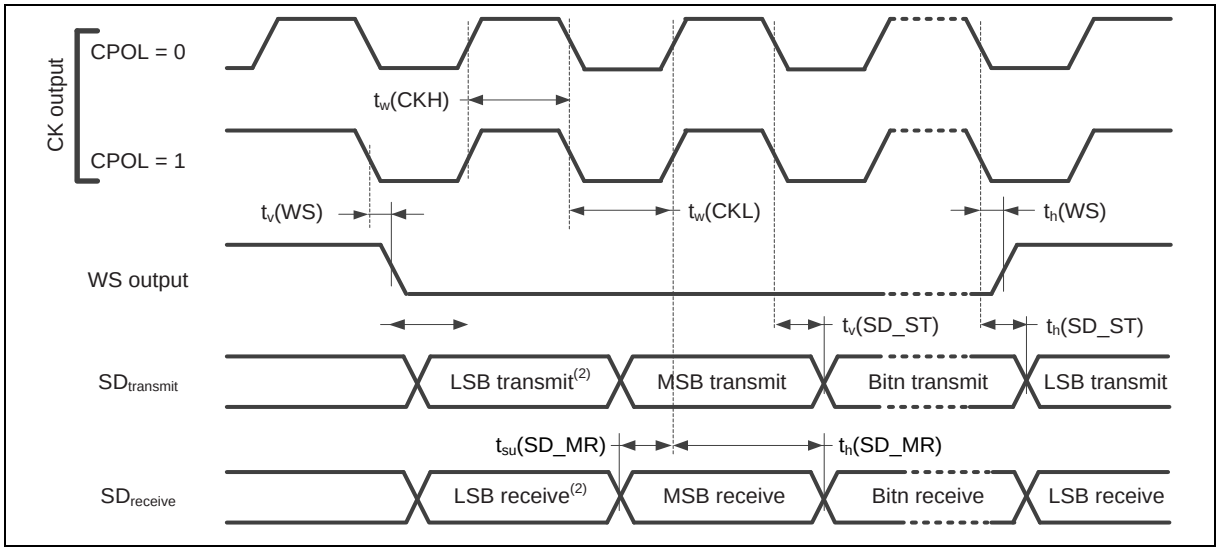

Figure 9.6-3 I²S Master Mode Timing Diagram

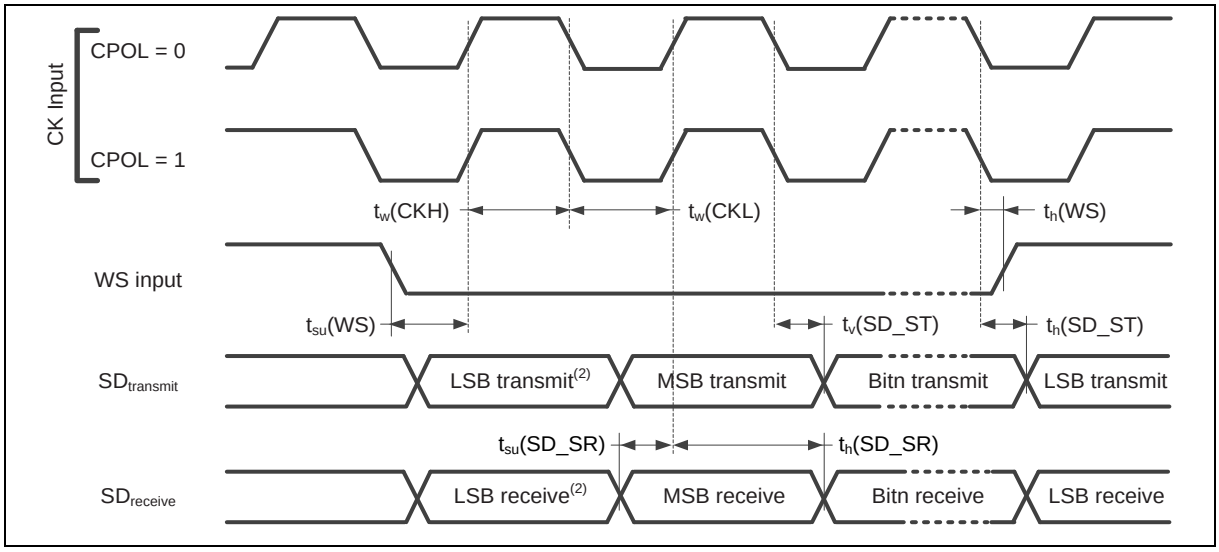

Figure 9.6-4 I²S Slave Mode Timing Diagram

9.6.3 I²S Dynamic Characteristics

Symbol	Parameter	Min	Max	Unit	Test Conditions
$t_{w(CKH)}$	I²S clock high time	40	-	ns	Master f_{PCLK} = MHz, data: 24 bits, audio frequency = 256 kHz
$t_{w(CKL)}$	I²S clock low time	40	-		
$t_{v(WS)}$	WS valid time	4	16		Master mode
$t_{h(WS)}$	WS hold time	1	-		Master mode
$t_{su(WS)}$	WS setup time	24	-		Slave mode
$t_{h(WS)}$	WS hold time	0	-		Slave mode
$DuCy_{(SCK)}$	I²S slave input clock duty cycle	30	70	%	Slave mode
$t_{su(SD_MR)}$	Data input setup time	10	-	ns	Master receiver
$t_{su(SD_SR)}$		7	-		Slave receiver
$t_{h(SD_MR)}$	Data input hold time	7	-		Master receiver
$t_{h(SD_SR)}$		4	-		Slave receiver
$t_{v(SD_ST)}$	Data output valid time	-	10		Slave transmitter (after enable edge)
$t_{h(SD_ST)}$	Data output hold time	4	-		Slave transmitter (after enable edge)
$t_{v(SD_MT)}$	Data output valid time	-	4		Master transmitter (after enable edge)
$t_{h(SD_MT)}$	Data output hold time	0	-		Master transmitter (after enable edge)

Note:

1. Guaranteed by design.

Table 9.6-4 I²S Characteristics

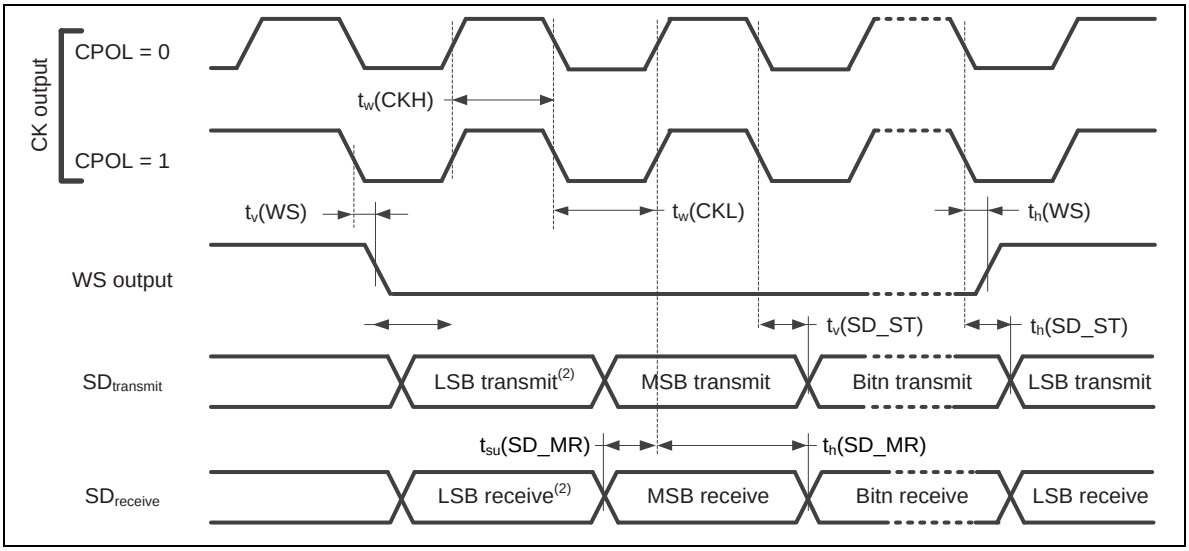

Figure 9.6-5 I²S Master Mode Timing Diagram

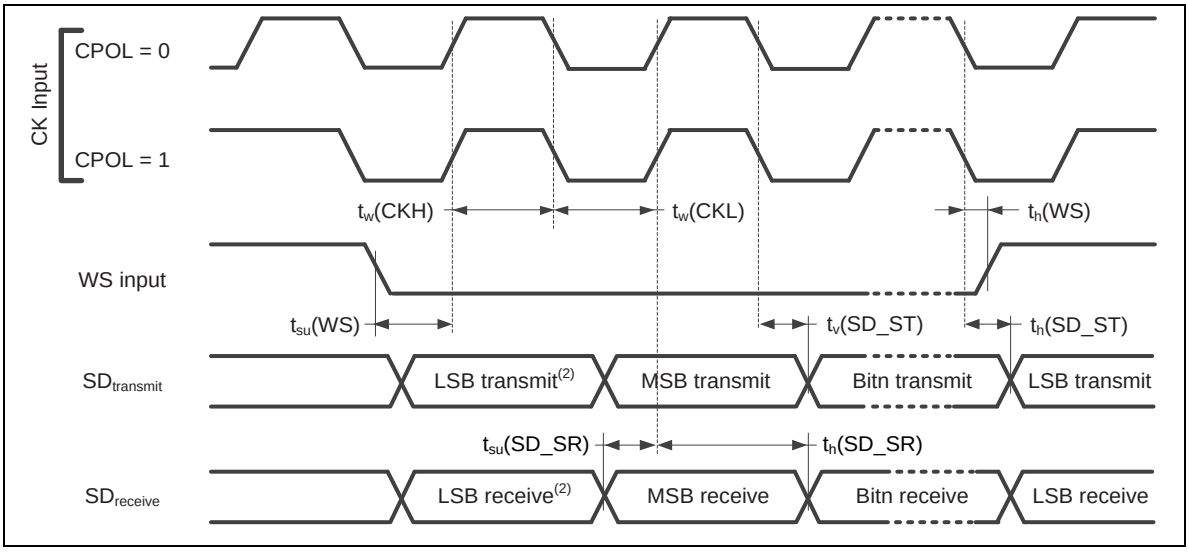

Figure 9.6-6 I²S Slave Mode Timing Diagram

9.6.4 I²C Dynamic Characteristics

Symbol	Parameter	Standard Mode[1][2]		Fast Mode[1][2]		Unit
		Min	Max	Min	Max	
t_{LOW}	SCL low period	4.7	-	1.3	-	μs
t_{HIGH}	SCL high period	4	-	0.6	-	μs
$t_{SU;\ STA}$	Repeated START condition setup time	4.7	-	0.6	-	μs
$t_{HD;\ STA}$	START condition hold time	4	-	0.6	-	μs
$t_{SU;\ STO}$	STOP condition setup time	4	-	0.6	-	μs
t_{BUF}	Bus free time	4.7[3]	-	1.2[3]	-	μs
$t_{SU;DAT}$	Data setup time	250	-	100	-	ns
$t_{HD;DAT}$	Data hold time	0[4]	3.45[5]	0[4]	0.8[5]	μs
t_r	SCL/SDA rise time	-	1000	20+0.1C_b	300	ns
t_f	SCL/SDA fall time	-	300	-	300	ns
C_b	Capacitive load for each bus line	-	400	-	400	pF

Note:

1. Guaranteed by characteristic, not tested in production
2. HCLK must be higher than 2 MHz to achieve the maximum standard mode I²C frequency. It must be higher than 8 MHz to achieve the maximum fast mode I²C frequency.
3. I²C controller must be retriggered immediately at slave mode after receiving STOP condition.
4. The device must internally provide a hold time of at least 300 ns for the SDA signal in order to bridge the undefined region of the falling edge of SCL.
5. The maximum hold time of the Start condition has only to be met if the interface does not stretch the low period of SCL signal.

Table 9.6-5 I²C Characteristics

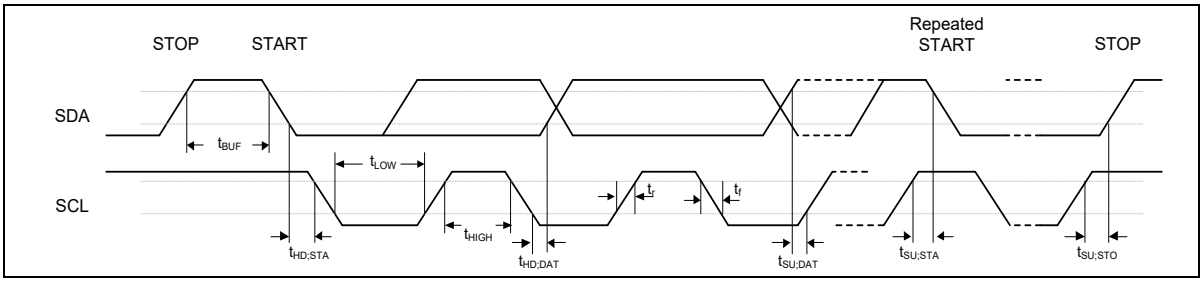

Figure 9.6-7 I²C Timing Diagram

9.6.5 USB Characteristics

9.6.5.1 USB Full-Speed Characteristics

Symbol	Parameter	Min.	Typ.	Max.	Unit	Test Conditions
V_{BUS}	USB full speed transceiver operating voltage	4.4		5.25	V	
V_{DD}	Operation Voltage	3.0		3.6	V	
V_{IH}	Input High (driven)	2.0	-	-	V	-
V_{IL}	Input Low	-	-	0.8	V	-
V_{DI}	Differential Input Sensitivity	-	0.2	-	V	|PADP-PADM|
V_{CM}	Differential Common-mode Range	0.8	-	2.5	V	-
V_{SE}	Single-ended Receiver Threshold	0.8	-	2.0	V	-
	Receiver Hysteresis	-	200	-	mV	Single End RX
V_{OL}	Output Low (driven)	0	-	0.3	V	-
V_{OH}	Output High (driven)	2.8	-	3.6	V	-
V_{CRS}	Output Signal Cross Voltage	1.3	-	2.0	V	-
R_{PU}	Pull-up Resistor	0.9	1.2	1.575	kΩ	DATARPU2=1
R_{PU}	Pull-up Resistor	1.425	2.3	3.09	kΩ	DATARPU2=0
R_{PD}	Pull-down Resistor	14.25	19.5	24.8	kΩ	-
V_{TRM}	TERMINATION Voltage for Uptream port pull up (RPU)	3.0	-	3.6	V	-
Z_{DRV}	Driver Output Resistance	-	10	-	Ω	-
C_{IN}	Transceiver Capacitance	-	-	26	pF	-

Table 9.6-6 USB Full-Speed Characteristics

9.6.5.2 USB Full-Speed PHY characteristics

Symbol	Parameter	Min [*1]	Typ	Max [*1]	Unit	Test Conditions
T_{FR}	rise time	4	-	20	ns	-
T_{FF}	fall time	4	-	20	ns	-
T_{FRFF}	rise and fall time matching	90	-	111.11	%	$T_{FRFF} = T_{FR}/T_{FF}$

Note:

1. Guaranteed by characterization result, not tested in production.

Table 9.6-7 USB Full-Speed PHY Characteristics

9.6.6 SDIO Characteristics

9.6.6.1 SDIO Default Mode Timing

Symbol	Parameter	Min	Typ	Max	Unit	Test Condition
$T_{P_SD_CLK}$	SD_CLK Period (Data Transfer Mode)	40	-	-	ns	-
$T_{P_SD_CLK_ID}$	SD_CLK Period (Identification Mode)	2,500	-	-	ns	
$T_{H_SD_CLK}$	SD_CLK High Time	-	20	-	ns	-
$T_{L_SD_CLK}$	SD_CLK Low Time	-	20	-	ns	-
$T_{SU_SD_IN}$	SD_DATA Setup Time to SD_CLK Rising	5	-	-	ns	-
$T_{HD_SD_IN}$	SD_DATA Hold Time from SD_CLK Rising	5	-	-	ns	-
$T_{DLY_SD_OUT}$	SD_CLK Falling to Valid SD_DATA Delay	-	-	14	ns	-

Note:

1. Guaranteed by characterization result, not tested in production.

Table 9.6-8 SDIO Default Mode Timing

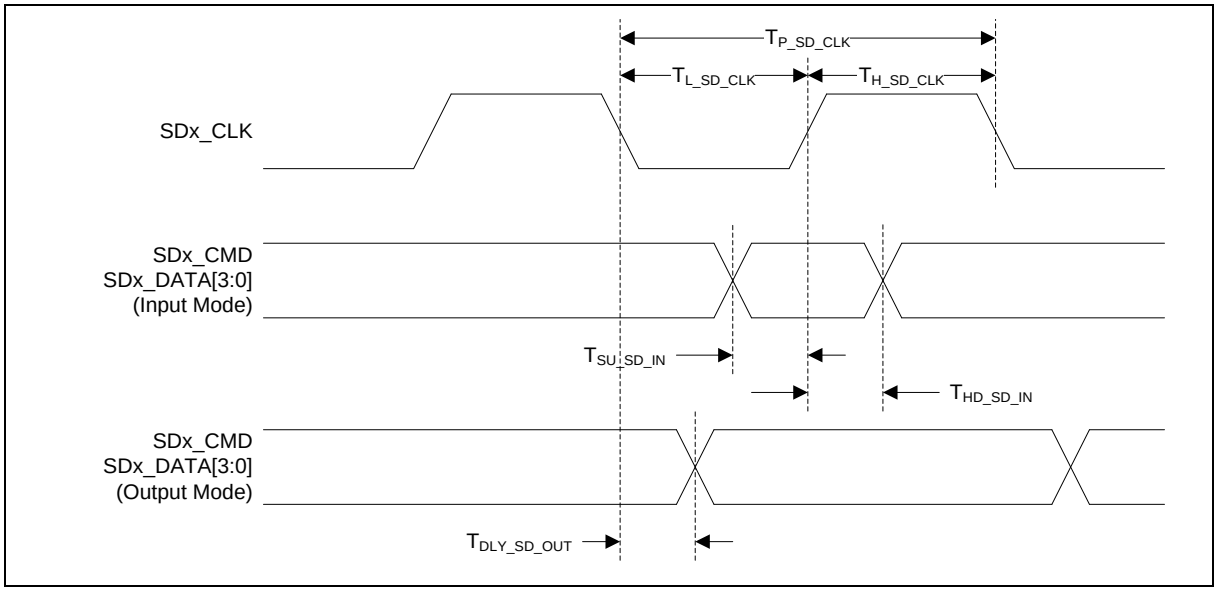

Figure 9.6-8 SDIO Default Mode

9.6.6.2 SDIO Dynamic characteristics

Symbol	Parameter	Min	Typ	Max	Unit	Test Condition
$T_{P_SD_CLK}$	SD_CLK Period	20	-	-	ns	-
$T_{H_SD_CLK}$	SD_CLK High Time	7	-	-	ns	-
$T_{L_SD_CLK}$	SD_CLK Low Time	7	-	-	ns	-
$T_{SU_SD_IN}$	SD_DATA Setup Time to SD_CLK Rising	6	-	-	ns	-
$T_{HD_SD_IN}$	SD_DATA Hold Time from SD_CLK Rising	2	-	-	ns	-
$T_{DLY_SD_OUT}$	SD_CLK Falling to Valid SD_DATA Delay	-	-	14	ns	-
$T_{HD_SD_OUT}$	SD_DATA Hold Time from SD_CLK Rising	2.5	-	-	ns	-

Note:

1. Guaranteed by characterization result, not tested in production.

Table 9.6-9 SDIO Dynamic Characteristics

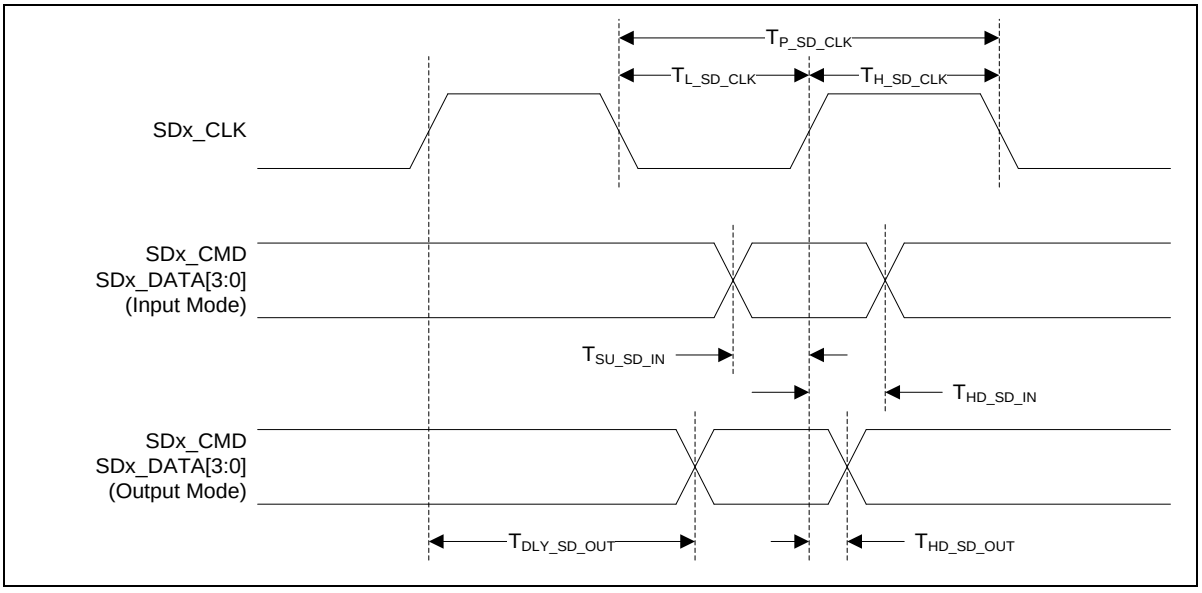

Figure 9.6-9 SDIO High-speed Mode

9.6.7 EBI Characteristics

Symbol	Parameter	Min	Typ	Max	Unit	Test Condition
T_{tACS}	Address Setup Time to EBI_nCS Falling Edge	-	0	-	T_{HCLK}[1]	-
T_{tCOS}	EBI_nCS Setup Time to EBI_nWE or EBI_nOE Falling Edge	-	1	-	T_{HCLK}[1]	-
T_{tACC}	EBI_nWE or EBI_nOE Active Low Time	1[2]	-	32	T_{HCLK}[1]	-
T_{tCOH}	EBI_nCS Hold Time from EBI_nWE or EBI_nOE Rising Edge	0	-	8	T_{HCLK}[1]	-
$T_{SU_EBI_RD}$	EBI_DATA Read Setup Time to EBI_nOE Rising Edge	1	-	-	T_{HCLK}[1]	-

Notes:

1. T_{HCLK} is the period of EBI's operating clock.
2. T_{tACC} must be set for at least 13ns.

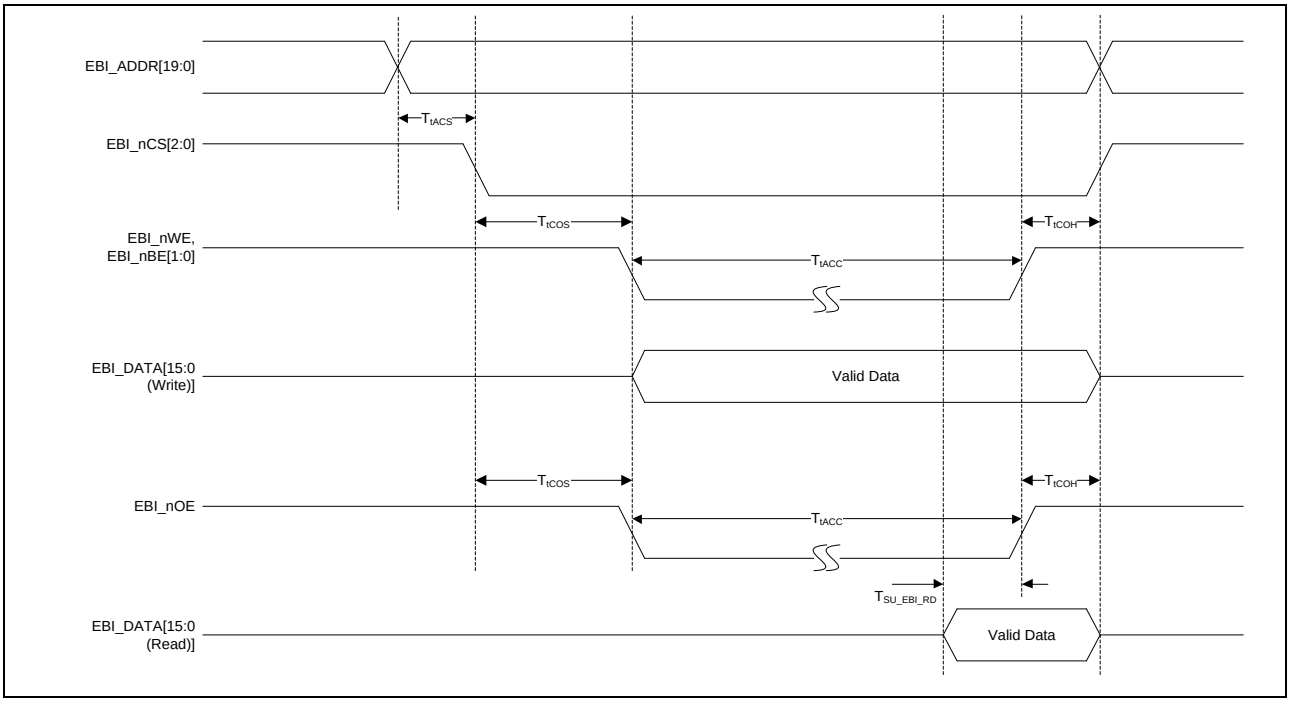

Figure 9.6-10 External Bus Interface Timing Diagram

9.6.8 Camera Capture Interface (CCAP) Characteristics

Symbol	Parameter	Min	Typ	Max	Unit	Test Condition
$T_{P_CCAP_PCLK}$	CCAP_PCLK Period	20	-	-	ns	
$T_{H_CCAP_PCLK}$	CCAP_PCLK High Time	-	10.0	-	ns	
$T_{L_CCAP_PCLK}$	CCAP_PCLK Low Time	-	10.0	-	ns	
$T_{SU_CCAP_IN}$	CCAP_HSYNC, CCAP_VSYNC, CCAP_FIELD and CCAP_DATA Setup Time to CCAP_PCLK Rising	4	-	-	ns	
$T_{HD_CCAP_IN}$	CCAP_HSYNC, CCAP_VSYNC, CCAP_FIELD and CCAP_DATA Hold Time from CCAP_PCLK Rising	1	-	-	ns	

Note:

1. Guaranteed by design.

Table 9.6-10 Camera Capture Interface Timing

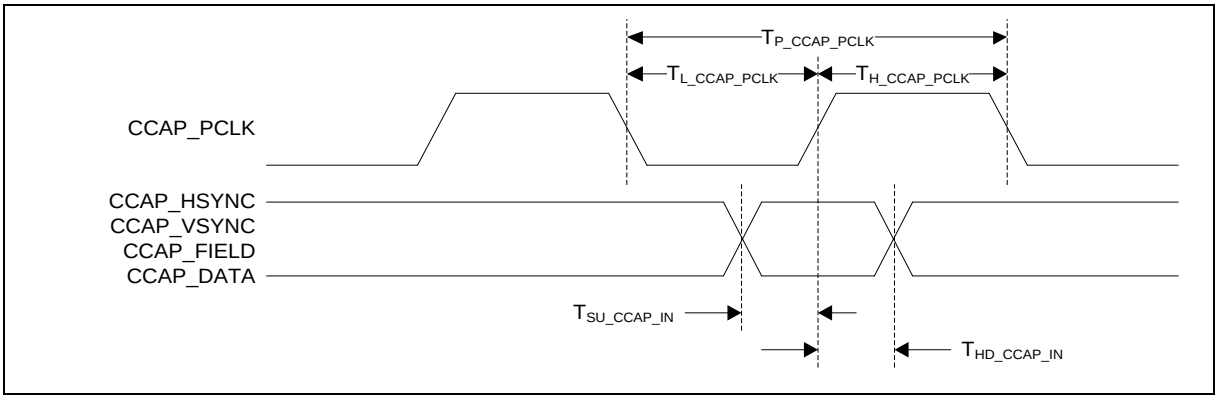

Figure 9.6-11 Camera Capture Interface Timing Diagram

9.7 Flash DC Electrical Characteristics

The devices are shipped to customers with the Flash memory erased.

Symbol	Parameter	Min	Typ	Max	Unit	Test Condition
V_{FLA}[1]	Supply voltage	1.08	-	1.32	V	T_A = 25°C
T_{ERASE}	Page erase time	-	-	160	ms	
T_{PROG}	Program time	-	-	50	µs	
I_{DD1}	Read current	-	4.12	-	mA	
I_{DD2}	Program current	-	5	-	mA	
I_{DD3}	Erase current	-	5	-	mA	
N_{ENDUR}	Endurance	10,000	-		cycles[2]	T_J = -40°C~125°C
T_{RET}	Data retention	TBD	-	-	year	10 kcycle[3] T_A = 55°C
		10	-	-	year	10 kcycle[3] T_A = 85°C
		TBD	-	-	year	10 kcycle[3] T_A = 125°C

Note:

1. V_{FLA} is source from chip internal LDO output voltage.
2. Number of program/erase cycles.
3. Guaranteed by design.

10 ABBREVIATIONS

10.1 Abbreviations

Acronym	Description
ACMP	Analog Comparator Controller
ADC	Analog-to-Digital Converter
AES	Advanced Encryption Standard
APB	Advanced Peripheral Bus
AHB	Advanced High-Performance Bus
BOD	Brown-out Detection
CAN	Controller Area Network
CCAP	Camera Capture Interface
DAP	Debug Access Port
DES	Data Encryption Standard
EADC	Enhanced Analog-to-Digital Converter
EBI	External Bus Interface
EMAC	Ethernet MAC Controller
EPWM	Enhanced Pulse Width Modulation
FIFO	First In, First Out
FMC	Flash Memory Controller
FPU	Floating-point Unit
GPIO	General-Purpose Input/Output
HCLK	The Clock of Advanced High-Performance Bus
HIRC	12 MHz Internal High Speed RC Oscillator
HXT	4~24 MHz External High Speed Crystal Oscillator
IAP	In Application Programming
ICP	In Circuit Programming
ISP	In System Programming
LDO	Low Dropout Regulator
LIN	Local Interconnect Network
LIRC	10 kHz internal low speed RC oscillator (LIRC)
MPU	Memory Protection Unit
NVIC	Nested Vectored Interrupt Controller
PCLK	The Clock of Advanced Peripheral Bus
PDMA	Peripheral Direct Memory Access
PLL	Phase-Locked Loop

PWM	Pulse Width Modulation
QEI	Quadrature Encoder Interface
SD	Secure Digital
SPI	Serial Peripheral Interface
SPS	Samples per Second
TDES	Triple Data Encryption Standard
TK	Touch Key
TMR	Timer Controller
UART	Universal Asynchronous Receiver/Transmitter
UCID	Unique Customer ID
USB	Universal Serial Bus
WDT	Watchdog Timer
WWDT	Window Watchdog Timer

Table 10.1-1 List of Abbreviations

11 PACKAGE DIMENSIONS

Package is Halogen-free, RoHS-compliant and TSCA-compliant.

11.1 QFN 33L (5x5x0.8 mm Pitch 0.5 mm)

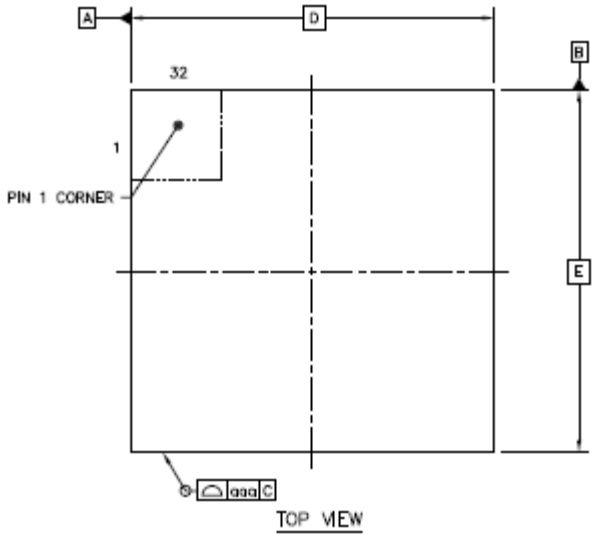

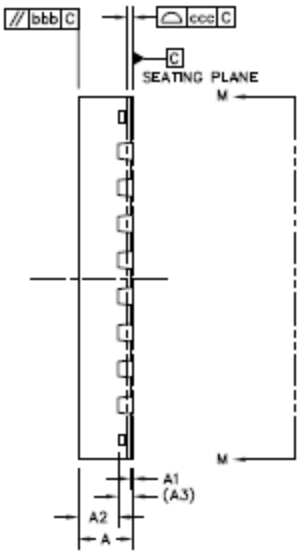

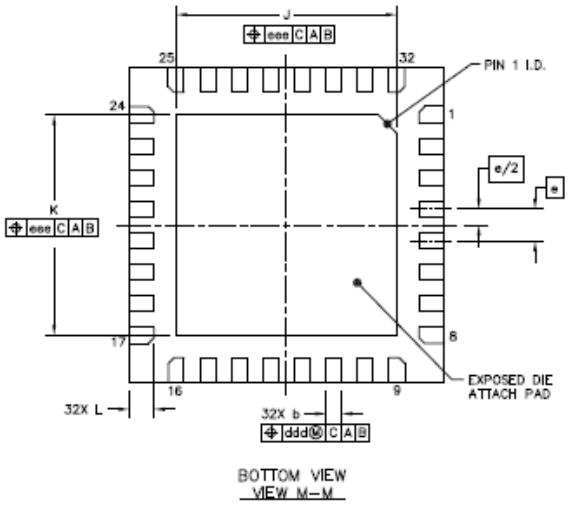

		SYMBOL	MIN	NOM	MAX
TOTAL THICKNESS		A	0.7	0.75	0.8
STAND OFF		A1	0	0.035	0.05
MOLD THICKNESS		A2	---	0.55	0.57
L/F THICKNESS		A3		0.203 REF	
LEAD WIDTH		b	0.2	0.25	0.3
BODY SIZE	X	D		5 BSC	
	Y	E		5 BSC	
LEAD PITCH		e		0.5 BSC	
EP SIZE	X	J	3.4	3.5	3.6
	Y	K	3.4	3.5	3.6
LEAD LENGTH		L	0.35	0.4	0.45
PACKAGE EDGE TOLERANCE		aaa		0.1	
MOLD FLATNESS		bbb		0.1	
COPLANARITY		ccc		0.08	
LEAD OFFSET		ddd		0.1	
EXPOSED PAD OFFSET		eee		0.1	

11.2 QFN48L (5x5x0.8 mm Pitch 0.35 mm)

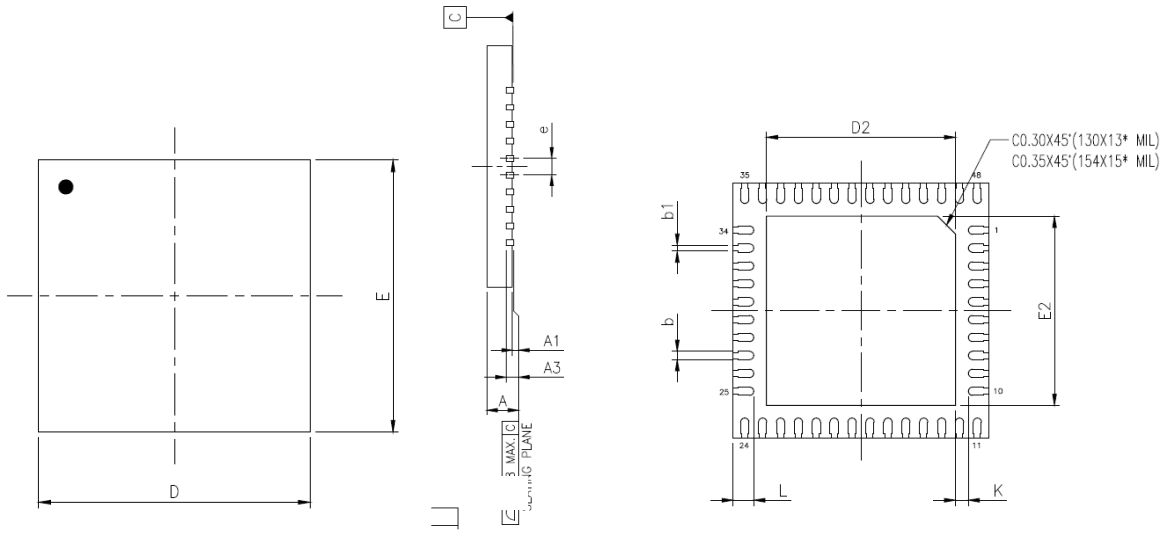

SYMBOLS	MIN.	NOM.	MAX.
A	0.70	0.75	0.80
A1	0.00	0.02	0.05
A3		0.203 REF.	
b	0.13	0.18	0.23
b1	0.07	0.12	0.17
D		5.00 BSC	
E		5.00 BSC	
e		0.35 BSC	
K	0.20	—	—

PAD SIZE	D2			E2			L		
	MIN.	NOM.	MAX.	MIN.	NOM.	MAX.	MIN.	NOM.	MAX.
130X13* MIL	3.65	3.70	3.75	3.65	3.70	3.75	0.35	0.40	0.45
154X15* MIL	3.65	3.70	3.75	3.65	3.70	3.75	0.35	0.40	0.45

11.3 LQFP 48L (7x7x1.4 mm Footprint 2.0mm)

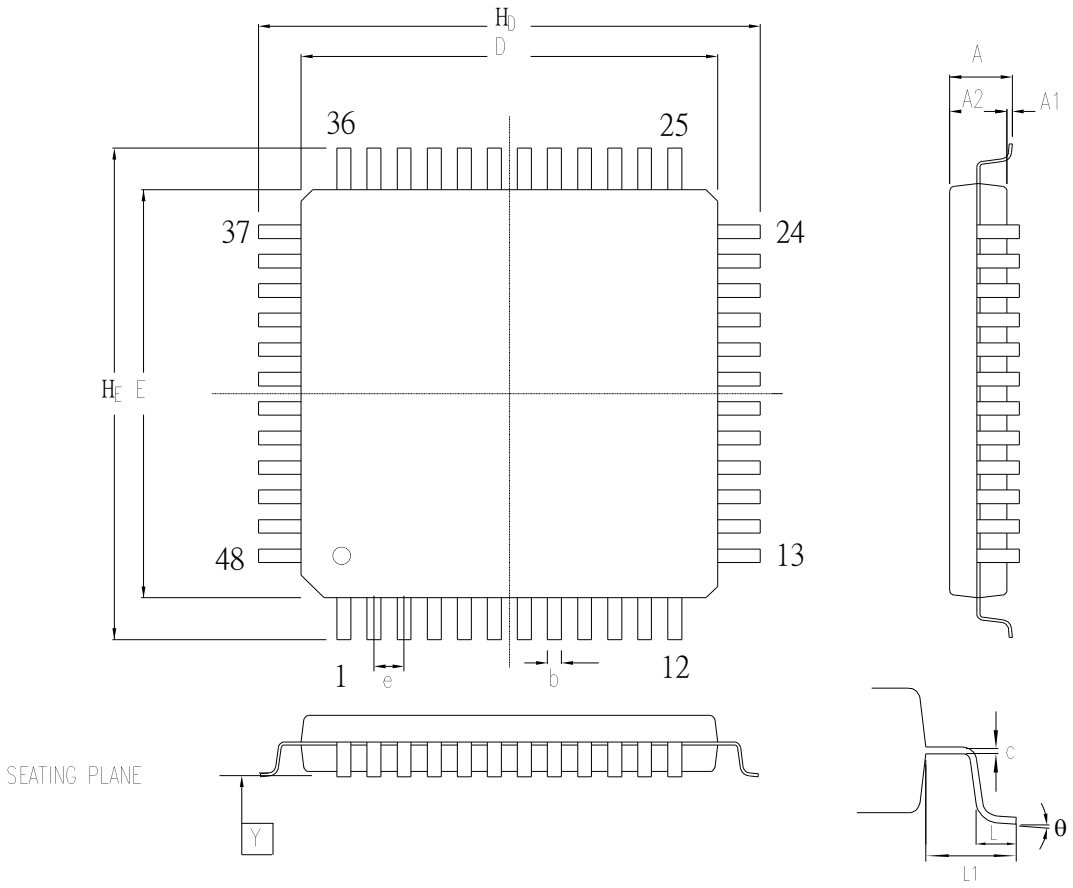

Controlling dimension : Millimeters

Symbol	Dimension in inch			Dimension in mm		
	Min	Nom	Max	Min	Nom	Max
A	—	—	—	—	—	—
A_1	0.002	0.004	0.006	0.05	0.10	0.15
A_2	0.053	0.055	0.057	1.35	1.40	1.45
b	0.006	0.008	0.010	0.15	0.20	0.25
c	0.004	0.006	0.008	0.10	0.15	0.20
D	0.272	0.276	0.280	6.90	7.00	7.10
E	0.272	0.276	0.280	6.90	7.00	7.10
e	0.014	0.020	0.026	0.35	0.50	0.65
H_D	0.350	0.354	0.358	8.90	9.00	9.10
H_E	0.350	0.354	0.358	8.90	9.00	9.10
L	0.018	0.024	0.030	0.45	0.60	0.75
L_1	—	0.039	—	—	1.00	—
Y	—	—	0.004	—	—	0.10
θ	0°	—	7°	0°	—	7°

11.4 LQFP 64L (7x7x1.4 mm footprint 2.0 mm)

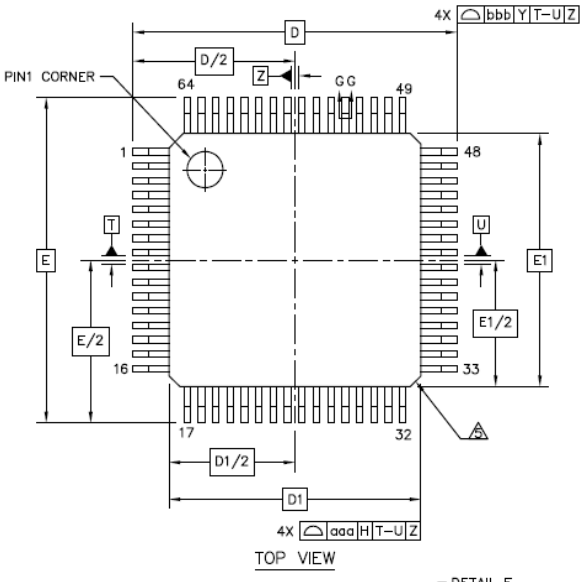

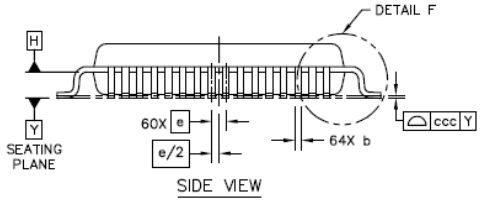

		SYMBOL	MIN	NOM	MAX
TOTAL THICKNESS		A	---	---	1.6
STAND OFF		A1	0.05	---	0.15
MOLD THICKNESS		A2	1.35	1.4	1.45
LEAD WIDTH(PLATING)		b	0.13	0.18	0.23
LEAD WIDTH		b1	0.13	0.16	0.19
L/F THICKNESS(PLATING)		c	0.09	---	0.2
L/F THICKNESS		c1	0.09	---	0.16
BODY SIZE	X	D		9 BSC	
	Y	E		9 BSC	
	X	D1		7 BSC	
	Y	E1		7 BSC	
LEAD PITCH		e		0.4 BSC	
		L	0.45	0.6	0.75
FOOTPRINT		L1		1 REF	
		θ	0°	3.5°	7°
		θ1	0°	---	---
		θ2	11°	12°	13°
		θ3	11°	12°	13°
		R1	0.08	---	---
		R2	0.08	---	0.2
		S	0.2	---	---
PACKAGE EDGE TOLERANCE		aaa		0.2	
LEAD EDGE TOLERANCE		bbb		0.2	
COPLANARITY		ccc		0.08	
LEAD OFFSET		ddd		0.07	
MOLD FLATNESS		eee		0.05	

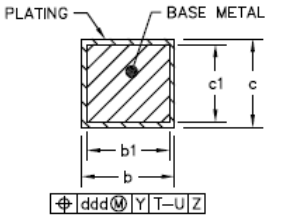

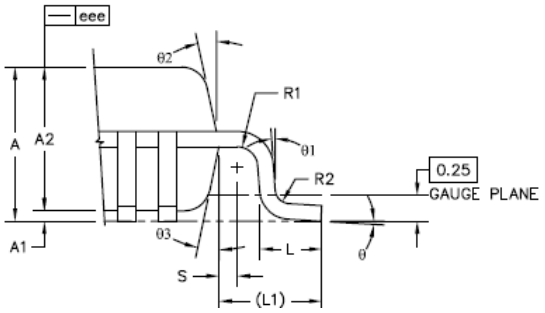

11.5 LQFP 128L (14x14x1.4 mm footprint 2.0 mm)

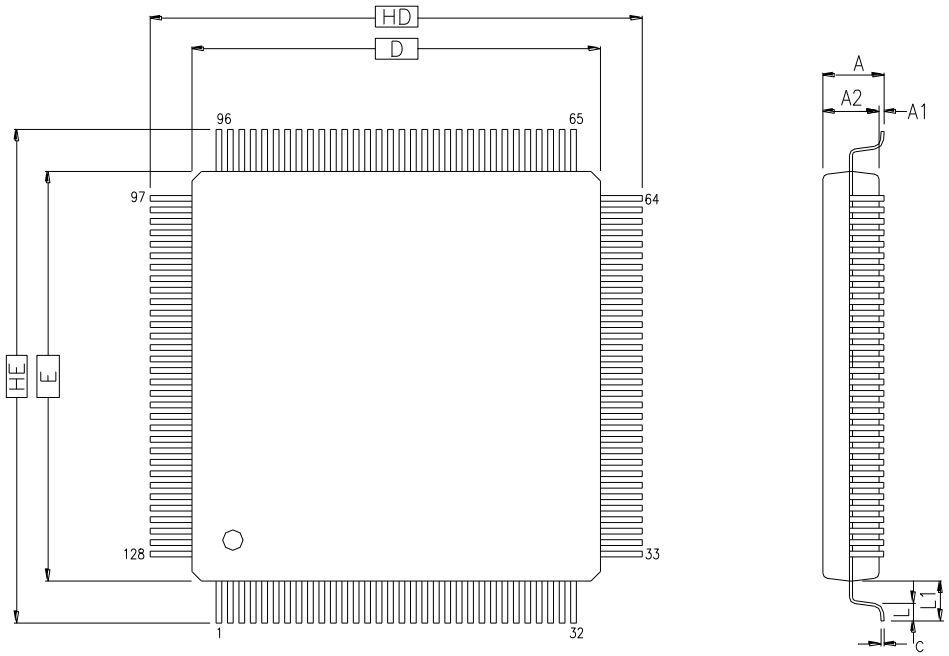

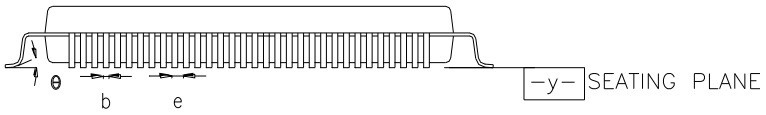

COTROL DIMENSIONS ARE IN MILLIMETERS.

SYMBOL	MILLIMETER			INCH		
	MIN.	NOM.	MAX.	MIN.	NOM.	MAX.
A	—	—	1.60	—	—	0.063
A1	0.05	—	0.15	0.002	—	0.006
A2	1.35	1.40	1.45	0.053	0.055	0.057
HD	16.00 BSC.			0.630 BSC.		
D	14.00 BSC.			0.551 BSC.		
HE	16.00 BSC.			0.630 BSC.		
E	14.00 BSC.			0.551 BSC.		
b	0.13	0.16	0.23	0.005	0.006	0.009
e	0.40 BSC.			0.016 BSC.		
θ	0°	3.5°	7°	0°	3.5°	7°
c	0.09	—	0.20	0.004	—	0.008
L	0.45	0.60	0.75	0.018	0.024	0.030
L1	1.00 REF			0.039 REF		
y	–	–	0.1	–	–	0.004

11.6 LQFP 144L (20x20x1.4 mm footprint 2.0 mm)

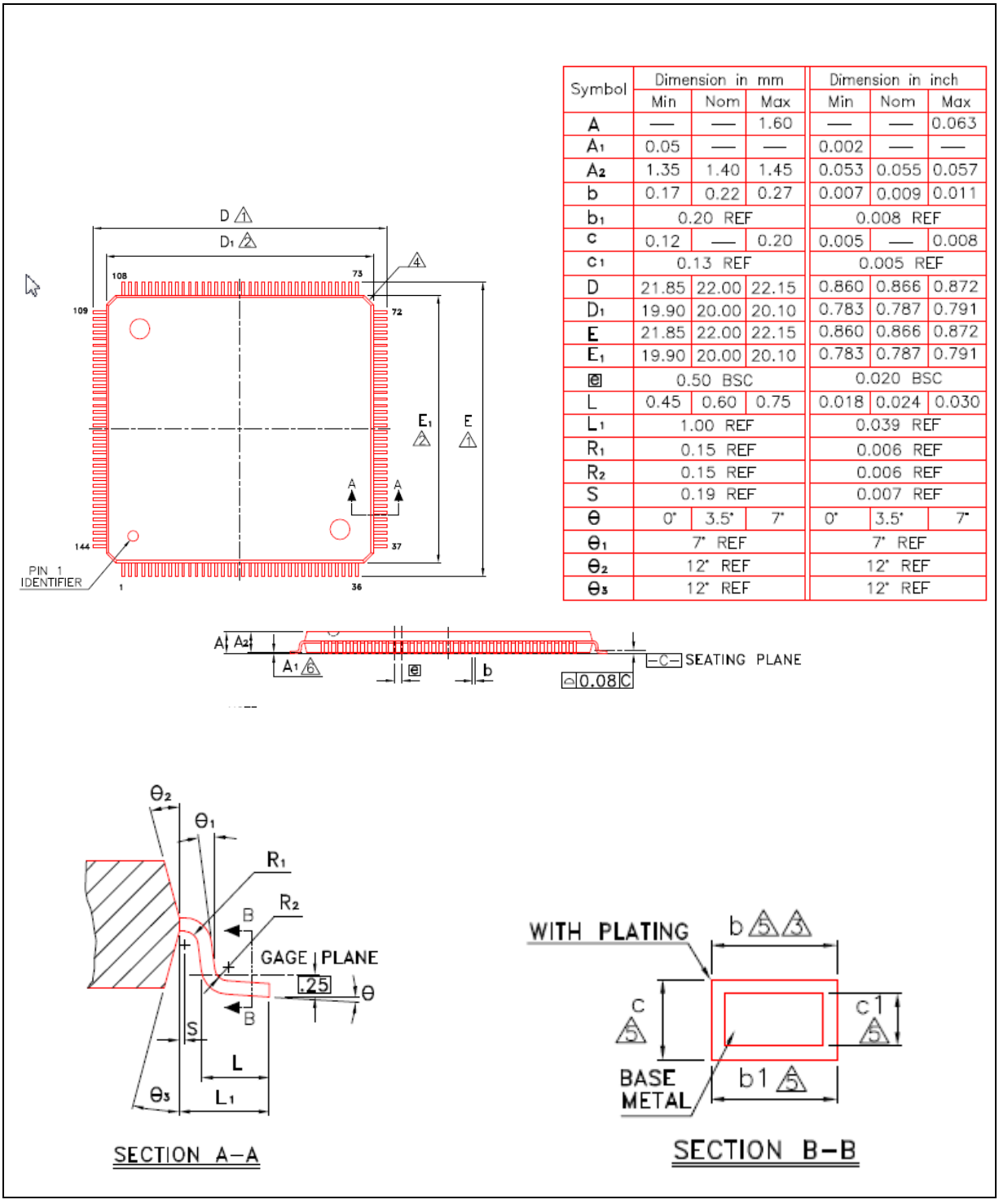

Symbol	Dimension in mm			Dimension in inch		
	Min	Nom	Max	Min	Nom	Max
A	—	—	1.60	—	—	0.063
A_1	0.05	—	—	0.002	—	—
A_2	1.35	1.40	1.45	0.053	0.055	0.057
b	0.17	0.22	0.27	0.007	0.009	0.011
b_1	0.20 REF			0.008 REF		
c	0.12	—	0.20	0.005	—	0.008
c_1	0.13 REF			0.005 REF		
D	21.85	22.00	22.15	0.860	0.866	0.872
D_1	19.90	20.00	20.10	0.783	0.787	0.791
E	21.85	22.00	22.15	0.860	0.866	0.872
E_1	19.90	20.00	20.10	0.783	0.787	0.791
e	0.50 BSC			0.020 BSC		
L	0.45	0.60	0.75	0.018	0.024	0.030
L_1	1.00 REF			0.039 REF		
R_1	0.15 REF			0.006 REF		
R_2	0.15 REF			0.006 REF		
S	0.19 REF			0.007 REF		
θ	0°	3.5°	7°	0°	3.5°	7°
$θ_1$	7° REF			7° REF		
$θ_2$	12° REF			12° REF		
$θ_3$	12° REF			12° REF		

12 REVISION HISTORY

Date	Revision	Description
2018.03.30	1.00	1. Initial version.
2018.07.16	1.01	1. Added the note “the SRAM bank2 has additional two wait cycles when reading data” in section 6.2.7. 2. Added the note that HXT should be 12 MHz for USB High-speed application in Figure 6.3-1.
2019.06.20	2.00	1. Added new M480 256 KB Flash product lines. 2. Added features comparison tables in FMC, BPWM, SDH, Crypto and EADC peripherals. 3. Added section 6.44 Peripherals Interconnection which allow autonomous communication or synchronous action between peripherals.
2019.08.20	2.01	1. Removed M48xGAAE parts information in Selection Guide.
2019.10.20	2.02	1. Added new M480 128 KB Flash product lines: – M481 product line: M481ZE8AE, M481LE8AE and M481SE8AE – M482 product line: M482ZE8AE, M482LE8AE and M482SE8AE – M483 product line: M483SE8AE
2020.05.08	3.00	1. Added new part M487KMCAN. 2. Added notes about the hardware reference design for ICE_DAT, ICE_CLK and nRESET pins in section 4.2, 4.3 and chapter 7. 3. Fixed SPIx clock PCLK defined in Figure 6.3-1. 4. Added CCAP_SCLK and removed HSOTG clock in Figure 6.3-2.
2020.11.02	3.01	1. Added notes about the register HCLKDIV in Figure 6.3-2. 2. Added notes about external crystal HXT and LXT in Table 9.4-4 and Table 9.4-7.
2020.12.08	3.02	1. Added external crystal part number in Table 9.4-4 and Table 9.4-7 notes.
2022.02.22	3.03	1. Updated the Max. current of DPD mode in section 9.3.1. 2. Revised UART, TIMER and WDT clocks in Table 6.2-5. 3. Added Table 8.1-3 Thermal Characteristics. 4. Added Table 8.1-5 ESD Characteristics. 5. Added section 8.1.4.1 Electrostatic discharge (ESD). 6. Added section 8.1.4.2 Static latchup. 7. Added section 8.1.4.3 Electrical fast transients (EFT). 8. Added section 8.1.5 Package Moisture Sensitivity (MSL). 9. Added section 8.1.6 Soldering Profile. 10. Added InRush current in section 8.2.
2022.05.04	3.04	1. Removed 1.62V featrue. 2. Added LQFP144 Thermal resistance junction-ambient in Table 8.1-3. 3. Added section 8.15 EBI Characteristics for M48XID/M487KMCAN. 4. Added section 9.6.7 EBI Characteristics for M48XGC/M48XE8.

2022.08.17	3.05	1.	Removed SWDH pin name in section 4.2 and 4.3.
		2.	Revised Standby Power-down mode current consumption in section 9.3.1.
		3.	Revised PE.8, PE.9, PE.10, PE.11 and PE.12 MFP14 in section 4.2.
		4.	Removed Flash access cycle auto-tuning function in section 6.5.
2022.12.17	3.06	1.	Added new part M485ZIDAE.
2023.03.01	3.07	1.	Added new part M485YIDAE.
2023.07.05	3.08	1.	Added USB full-speed V_{BUS} electrical characteristics in section 8.12.1 and 9.6.5.1.
		2.	Revised M485YIDAE QFN-48 pin diagram in section 4.1.2.
2023.12.13	3.09	1.	Revised M48xGC/M48xE8 crypto features in section 6.38.2.

Important Notice

Nuvoton Products are neither intended nor warranted for usage in systems or equipment, any malfunction or failure of which may cause loss of human life, bodily injury or severe property damage. Such applications are deemed, "Insecure Usage".

Insecure usage includes, but is not limited to: equipment for surgical implementation, atomic energy control instruments, airplane or spaceship instruments, the control or operation of dynamic, brake or safety systems designed for vehicular use, traffic signal instruments, all types of safety devices, and other applications intended to support or sustain life.

All Insecure Usage shall be made at customer's risk, and in the event that third parties lay claims to Nuvoton as a result of customer's Insecure Usage, customer shall indemnify the damages and liabilities thus incurred by Nuvoton.

Please note that all data and specifications are subject to change without notice.
All the trademarks of products and companies mentioned in this datasheet belong to their respective owners.