REV.	DATE	DESCRIPTION	BY	APVD
0	2024-02-06	RELEASE FOR PRODUCTION	Laslie	-

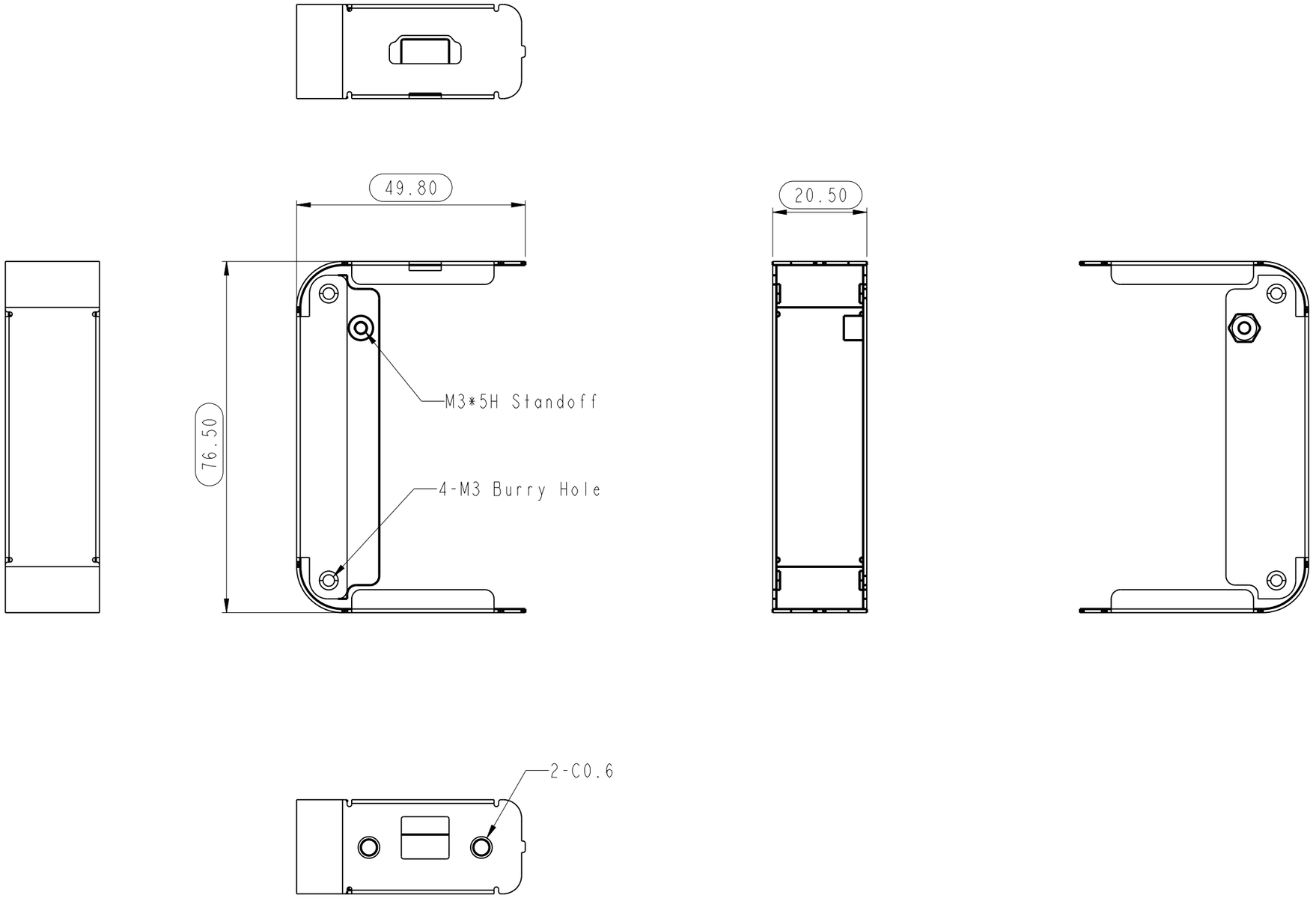

NOTE:
1.Material: SECC
2.Finish: Liquid paint, Black.
3.RoHS Compliant.

RANGE OF DIMENSION	TOLERANCE CLASS DESIGNATION f	V m	c
UP TO 30	±0.10	±0.20	±0.50
ABOVE 30~120	±0.15	±0.30	±0.80
ABOVE 120~315	±0.20	±0.50	±1.20
ABOVE 315~1000	±0.30	±0.80	±2.00
ANGLE ±1° (±1.75/100)			

THIRD ANGLE PROJECTION

UNITS:mm | SCALE: 1/1 | SHEET: 1 OF 1 | MODEL NO.:

MATERIAL: SECC | TREATMENT: Painting

DSGD by	Laslie	2024-02-06	PART NAME: Cover, Main
CHK by	-	-	
APVD by	-	-	PART NO.: 3MD674ME040 REV. 0
APVD NO.:		3D FILE NAME: BASE_HDMI_CON_BOX	DNA Laboratories ,Ltd.