Package Outline : PMPAK 3x3 (E-TYPE)

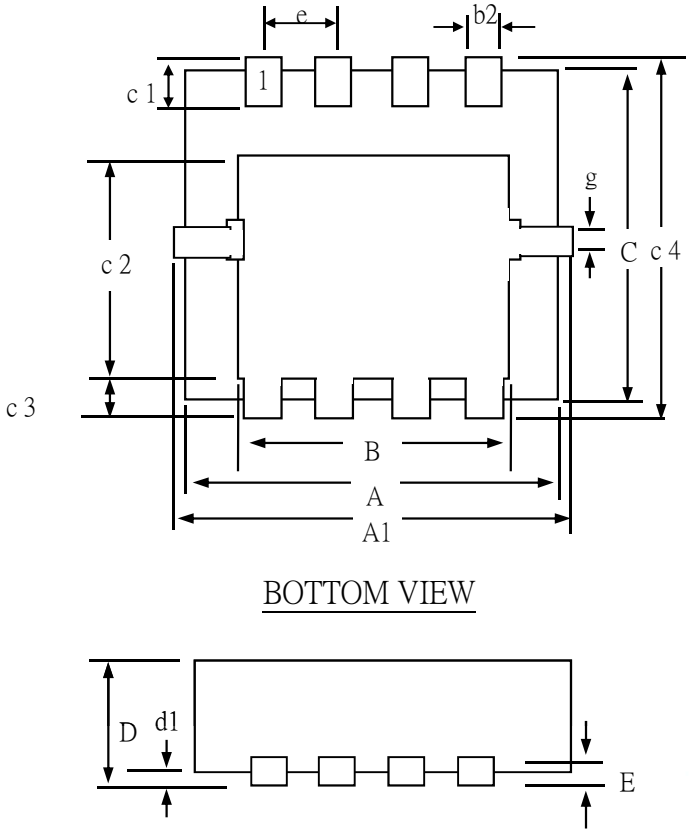

SYMBOLS	Millimeters		
	MIN	NOM	MAX
A	2.90	3.10	3.40
B	2.20	2.45	2.80
e	0.60	0.65	0.70
b2	0.20	0.30	0.40
C	2.90	3.10	3.40
c1	0.10	0.30	0.50
c2	1.20	1.70	2.20
c3	0.10	0.38	0.65
D	0.65	0.80	1.05
d1	0.00	0.10	0.20
E	0.10	0.18	0.25
A1	3.000	3.30	3.600
c4	3.000	3.30	3.600
g	0.20 (ref)		

1.All Dimension Are In Millimeters.

2.Dimension Does Not Include Mold Protrusions.

Draw No. M1-YT8-4-Gv05-1

PMPAK3X3(E-TYPE) FOOTPRINT：

