ISO9001 ISO14001 IATF16949 **CHILISIN ELECTRONICS CORP.**

RoHS & Halogen Free & REACH Compliance.

SPECIFICATION FOR APPROVAL

Customer：	佳世達			
Customer P/N:	**6J.10280.011**			
Drawing No：	**A0X2000176**			
Quantity：	**0**	**Pcs.**	**Date：**	**2020/07/22**
Chilisin P/N：	**CUW11T-900M-N**			

SPECIFICATION ACCEPTED BY:	
COMPONENT ENGINEER	
ELECTRICAL ENGINEER	
MECHANICAL ENGINEER	
APPROVED	
REJECTED	

奇力新電子股份有限公司
Chilisin Electronics Corp
No. 29, Alley 301, Tehhsin Rd.,
Hukou,Hsinchu 303, Taiwan
TEL：+886-3- 599-2646
FAX：+886-3- 599-9176
E-mail：sales@chilisin.com
http：//www.chilisin.com

東莞奇力新電子(東莞廠)有限公司
Chilisin Electronics (Dongguan) Co., Ltd.
No. 78, Puxing Rd., Yuliangwei Administration Area,
Qingxi Town, Dongguan City, Guangdong,China
TEL：+86-769-8773-0251~3
FAX： +86-769-8773-0232
E-mail：cect@chilisin.com

奇力新電子(越南廠)有限公司
Chilisin Electronics (Vietnam) Limited
No 143 - 145, Road No 10, VSIP Hai Phong,
Lap Le Commune, Thuy Nguyen Dist,
Haiphong City, Vietnam
Tel：84-316 255 688
Fax：84-316 255 689
E-mail：sales@chilisin.com

奇力新電子(湖南廠)有限公司
HuNan Chilisin Electronics Technology Co., Ltd
No. 8, Shaziao Liangshuijing Town, Yuanling
County, Huaihua City, Hunan Province 419601,
China
Tel：86-745-867-5882
E-mail：cect@chilisin.com

Applied by	Checked by	Approved by
Anna.Peng	Jimmy.Kuo	Jimmy.Kuo

ISO9001 ISO14001 IATF16949 CHILISIN ELECTRONICS CORP.

CUW11T Series Specification

1 Scope:

This specification applies to CUW FILTER

2 Part Numbering:

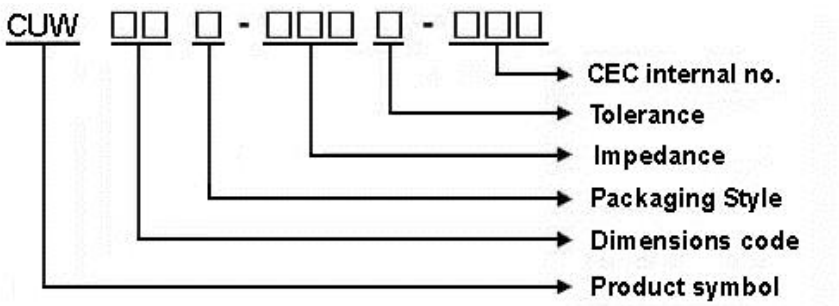

3 Rating:

Operating Temperature: －４０℃～１０５℃(Including self - temperature rise)

Storage Temperature: ２０℃～２５℃ R.H.６５％(In Tape & Reel Condition)

4 Marking:

No Marking

5 Standard Testing Condition

	Unless otherwise specified	In case of doubt
Temperature	Ordinary Temperature(15 to 35℃)	20 to 30℃
Humidity	Ordinary Humidity(25 to 85% RH)	50 to 80 %RH

CUW11T Series Specification

6 Configuration and Dimensions:

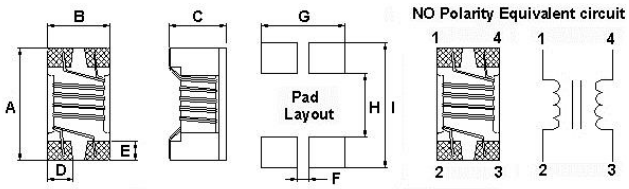

Dimensions in mm

TYPE	A	B	C	D	E	F	G	H	I
CUW11	1.25±0.2	1.0±0.2	0.8±0.1	0.32	0.33	0.36	1.0	0.59	1.75

7 Electrical Characteristics:

Part No.	Z (Ω)	RDC (Ω)Max.	IDC (mA)	Rated Voltage (Vdc)	Withstanding Voltage (Vdc)	Insulation Resistance (MΩ)(min)	Tolerance (±%)	Test Freq. (MHz)
CUW11T-900□-N00	90	0.3	250	50	125	100	M	100

NOTE: □-tolerance M=±20%

1.Operating temperature range －４０℃～１０５℃(Including self - temperature rise)

2.RDC: SINGLE WIRE TEST VALUE

3.IDC for Inductance drop 10% from its value without current.

"-N" FOR COMPLETELY LEAD FREE TYPE(INCLUDING FERRITE BODY & SOLDER)

CUW11T Series Specification

8 CUW11T Series

8.1 Construction:

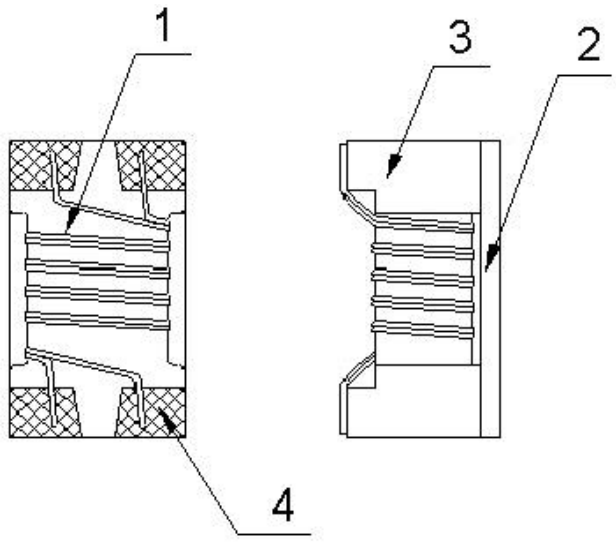

8.2 Material List:

No	Part	Material
1	WIRE	Grade 180
2	Cover sheet	FERRITE
3	CORE	FERRITE
4	TERMINAL	Ag/Cu/Ni/Sn

CUW11T Series Specification

9 Common Mode Choke / RELIABILITY TEST

1-1.Environmental Performance

No	Item	Specification	Test Method
1-1-1	Temperature Cycle	Appearance: No Damage Impedance: within±20% of initial value	One cycle: Step / Temperature (℃) / Time (min) 1 / -40±3 / 30 2 / 25±2 / 3 3 / 105±3 / 30 4 / 25±2 / 3 Total: 5 cycles Measured After Exposure in The Room Condition For 1hrs
1-1-2	Humidity Resistance		Temperature: 40±2℃ Relative Humidity: 90 ~ 95% Time: 100hrs Measured After Exposure In The Room Condition For 1hrs
1-1-3	High Temperature Resistance		Temperature:105±3℃ Time: 50Hrs Measured After Exposure In The Room Condition For 1Hrs
1-1-4	Low Temperature Resistance		Temperature: -40±3℃ Time: 50Hrs Measured After Exposure In The Room Condition For 1Hrs
1-1-5	High Temperature Load Life	There should be no evidence of short or open circle	Temperature:105±3℃ Load: Allowed DC Current Time: 500Hrs
1-1-6	Humidity Load Life		Temperature: 40±2℃ Relative Humidity: 90~95% Load: Allowed DC Current Time: 500Hrs

1-2.Mechanical Performance

No	Item	Specification	Test Method
1-2-1	Resistance To Soldering Heat	Appearance: No Damage	1. The device should be reflow soldered on PCB (peak 260℃±5℃ for 10 seconds) 2. Solder Composition: Sn/Ag3.0/Cu0.5 3. Test time: 6 minutes
1-2-2	Solder ability	The electrodes shall be at least 95% covered with new solder coating	1. Pre-Heating: 150℃,1min. 2. Solder Composition: Sn/Ag3.0/Cu0.5 3. Solder Temperature: 245±5℃. 4. Immersion Time: 4±1 sec.
1-2-3	Commponent Adhesion (Push Test)	1 Lbs. For 1210 Size 2 Lbs. For other	The device should be reflow soldered (245±5℃ For 10 seconds) to a tinned copper substrate. A force guauge should be applied to the side of the component. The device must withstand a minimum force of 2 pounds without a failure of the termination attached to component

CUW11T Series Specification

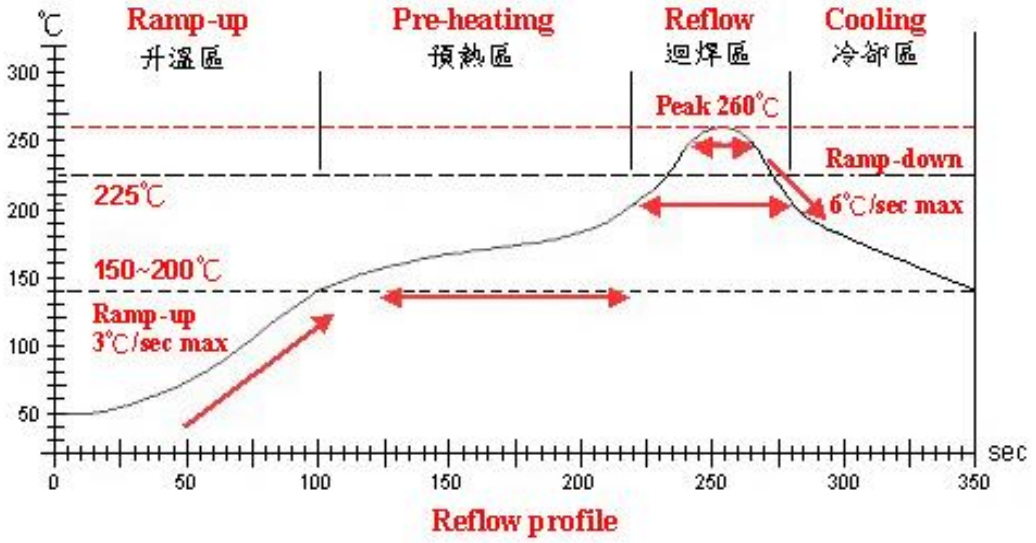

Reflow profile

Lead-Free(LF) 標準溫度分析範圍 Refer to J-STD-020C

管制項目 Item.	升溫區 Ramp-up	預熱區 Pre-heatimg	迴焊區 Reflow	Peak Temp	冷卻區 Cooling
溫度範圍 Temp.scope	R.T.~150℃	150℃~200℃	225℃	260±5℃	Peak Temp.~150℃
實際時間 Time result	—	60~180 sec	20~60 sec	5~10 sec	—

NOTE :

1. Re-flow possible times : within 2 times
2. Nitrogen adopted is recommended while in re-flow

CUW11T Series Specification

10 Product Test Data

Form No.: QF-1419
Edition: 2

Chilisin P/N: CUW11T-900M-N

Test Item (unit)	Z (Ω)	RDC (Ω)	IDC W11T-900M	A mm	B mm	C mm				
Customer Requirement	90±20%									
Spec Criteria		0.3Max.	250	1.25±0.2	1.0±0.2	0.8±0.1				
Test Condition	100MHz									
1	91	0.178	OK	1.30	1.02	0.82				
2	93	0.190	OK	1.30	1.03	0.84				
3	86	0.181	OK	1.30	1.03	0.85				
4	95	0.188	OK	1.29	1.03	0.86				
5	94	0.187	OK	1.29	1.03	0.85				
6	93	0.190	OK	1.30	1.04	0.84				
7	86	0.181	OK	1.30	1.03	0.85				
8	95	0.188	OK	1.29	1.03	0.86				
9	94	0.187	OK	1.29	1.03	0.85				
10	91	0.178	OK	1.30	1.02	0.82				
11										
12										
13										
14										
15										
$\overline{X}$	91.8	0.1848		1.296	1.029	0.844				
R	9	0.012		0.01	0.02	0.04				
Customer Sample										

Test Instrument

HP4286A / HP4287A / AgilentE4991A FOR Z
Chroma 16502 RDC(SIGNLE WIRE TEST VALUE)
HP4339B FOR Insulation Resistance
HP4284A+HP42841A/HP4285A+HP42841A FOR IDC

Appearance and Dimensions:

Appearance: Visual inspection according to inspection criteria.
Dimension: Measured with slide calipers.

Test Conditions:

	Unless Otherwise Specified	
Temperature	Ordinary Temperature (15 to 35℃)	
Humidity	Ordinary Humidity (25 to 85 %RH)	

CUW11T Series Specification

11 Packaging:

11.1 Packaging -Cover Tape

The force for tearing off cover tape is 10 to 100 grams in the arrow direction.

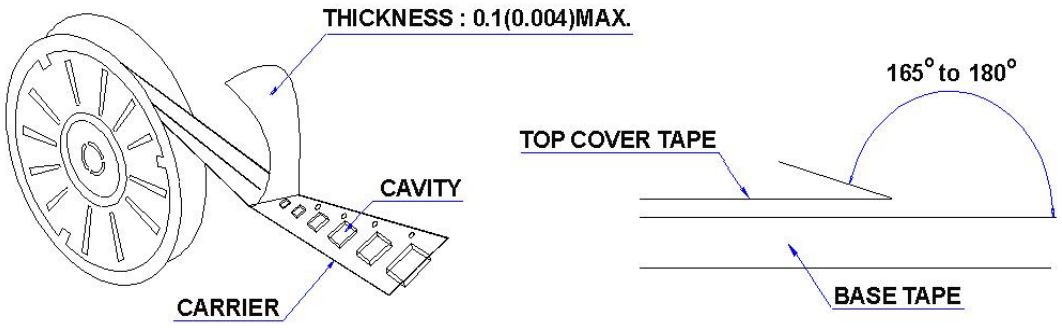

11.2 Packaging Quantity

TYPE	PCS/REEL
CUW11	2000

11.3 Reel Dimensions

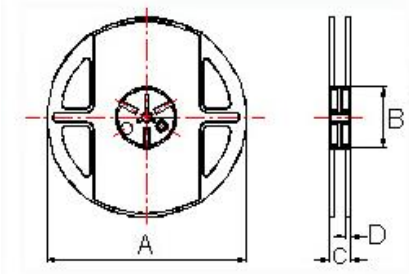

Dimensions in mm

TYPE	A	B	C	D
CUW11	178	60	12	1.5

CUW11T Series Specification

11 Packaging:

11.4 Tape Dimensions in mm

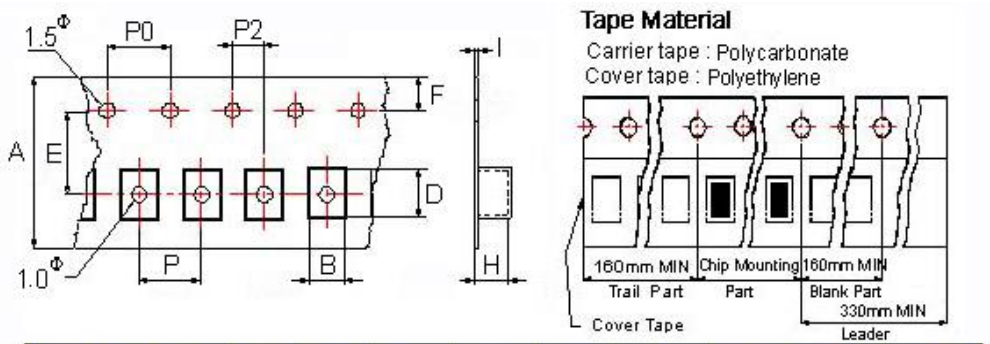

TYPE	A	B	D	E	F	H	I	P	P0	P2
CUW11	8	1.15	1.45	3.5	1.75	1.00	0.24	4	4	2

12 Recommended Land Pattern:

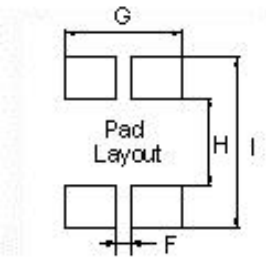

Dimensions in mm

TYPE	F(in/mm)	G(in/mm)	H(in/mm)	I(in/mm)
CUW11	0.014/0.36	0.039/1.0	0.023/0.59	0.069/1.75

13 Note:

1. Please make sure that your product has been evaluated and confirmed against your specifications when our product is mounted to your product.
2. Do not knock nor drop.
3. All the items and parameters in this product specification have been prescribed on the premise that our product is used for the purpose,under the condition and in the environment agreed upon between you and us. You are requested not to use our product deviating from such agreement.

4.The storage period is less than 12 months. Be sure to follow the storage conditions (Temperature: 5 to 40°C, Humidity: 10 to 75% RHor less).
If the storage period elapses, the soldering of the terminal electrodes may deteriorate.

5.Do not use or store in locations where there are conditions such as gas corrosion (salt, acid, alkali, etc.).

CUW11T Series Specification

14 Graph: CUW11T-900M-N

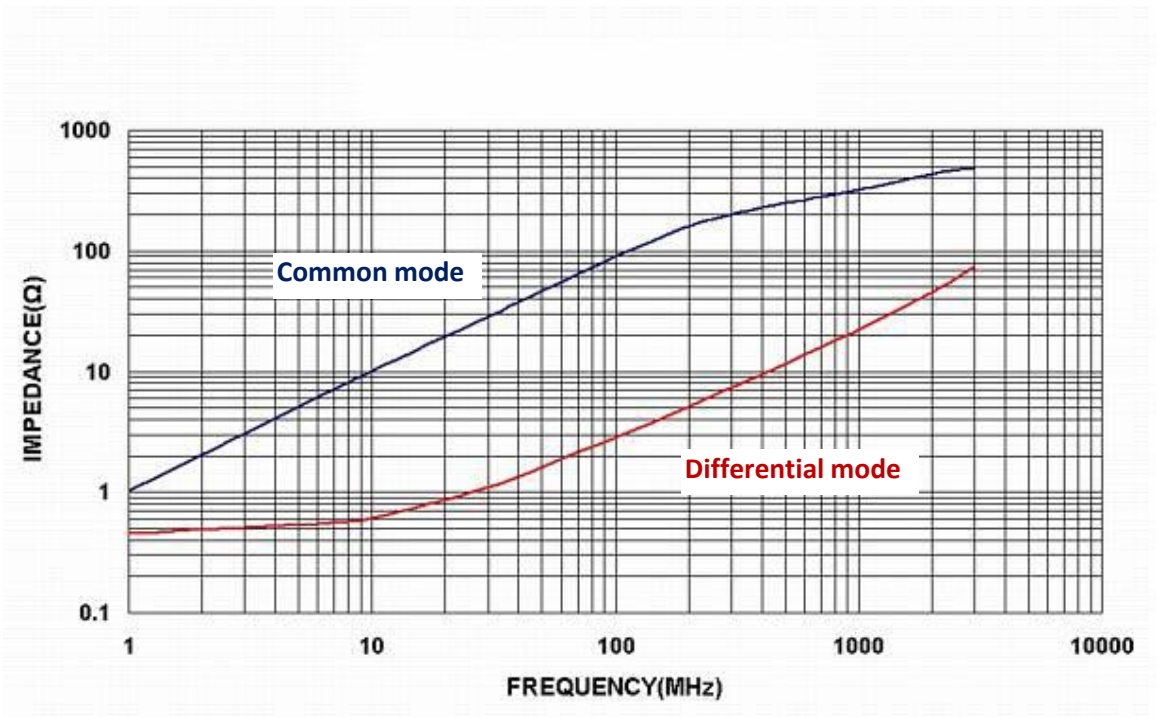

ISO9001 ISO14001 IATF16949 CHILISIN ELECTRONICS CORP.

包裝Label 之零件 Part number 說明:

REEL

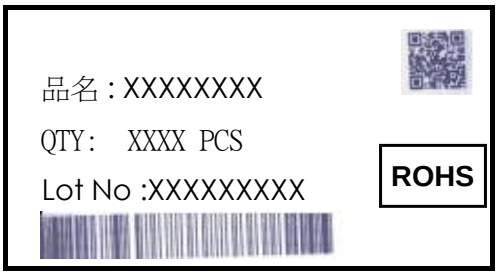

Box



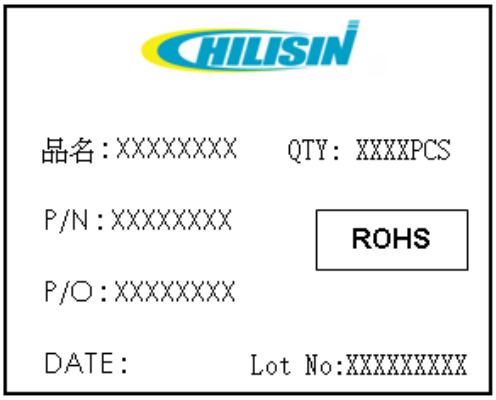

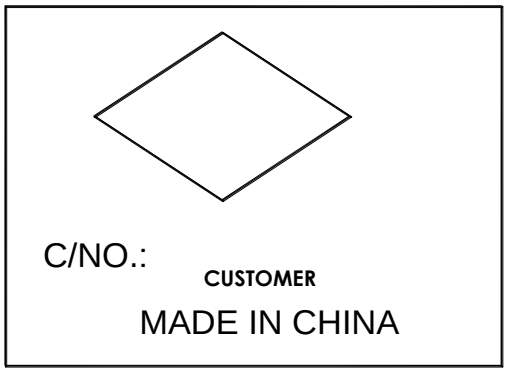

MADE IN CHINA

