

設計驗證
工程課
2024 -04- 18
發行
鈺緯科技開發股份有限公司

REV.	DATE	DESCRIPTION	BY	APVD

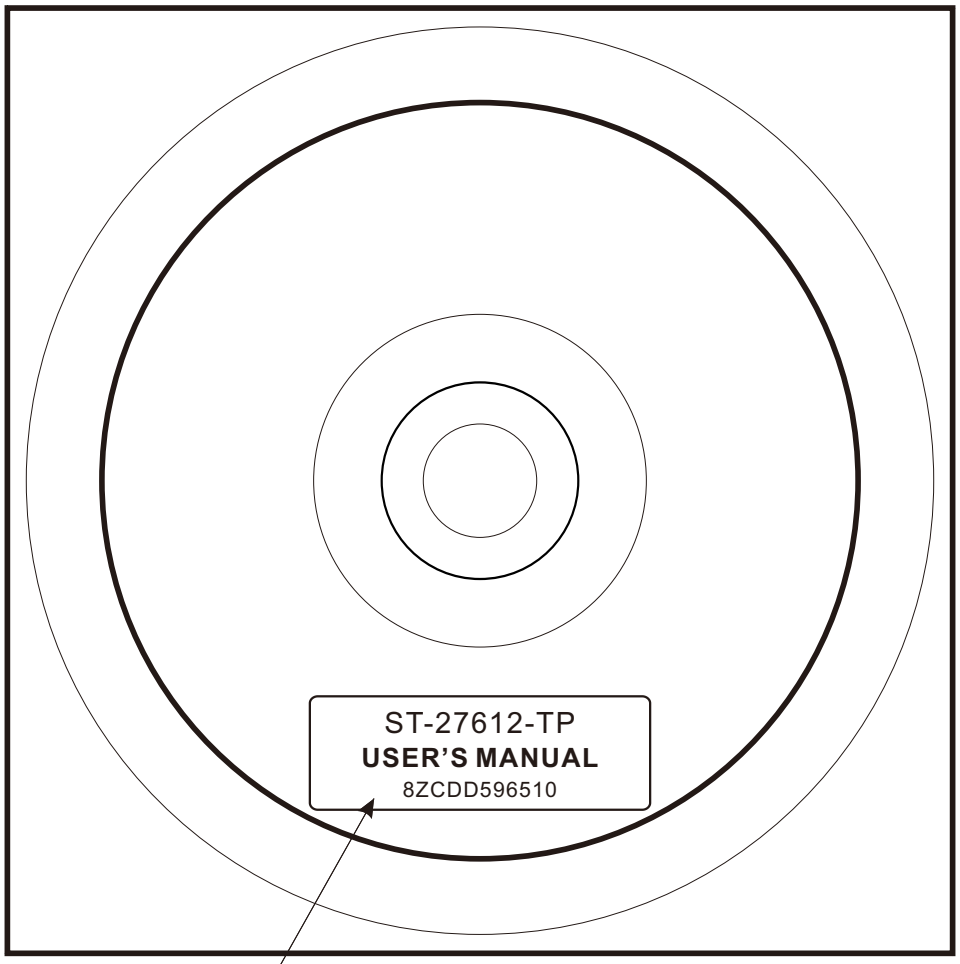

Note:
1. Use 3ZCDDLCK020 blank CD-ROM.
2. CD Files made in DIVA.
3. Label spec:45mm*15mm, white.
   Use Ricoh #B110CR ribbon.
4. IQC inspection document: QWI-021

設計驗證
工程課
2024 -04- 18
發行
鈺緯科技開發股份有限公司

PM / SALES	PE	PCD
Shinichi 0308 1400	NICK 0308 1750	Joanne 0403 1740

THIRD ANGLE PROJECTION	UNITS: mm	SCALE: 1/1	SHEET: 1/1	MODEL NO.:ST-27612-TP v2
	MATERIAL: SEE NOTES		TREATMENT: SEE NOTES	
DSGD by Killy	2024/03/01	PART NAME: CD MANUAL		
APVD by Lesley	2024/04/09	PART NO.: 8ZCDD596510		VER.0
APVD NO.: (Z0531)	FILE NAME: ST-27612-TP v2.cdr	DIVA Laboratories, Ltd.		

Optik View®

Medical-Grade Touch Display





User Guide

27” LCD Touch Screen Monitor

Model: ST - 27612 - TP

Optik View®

Table of Contents

1. Introduction 4
   - 1.1 Monitor description 4
   - 1.2 Box contents 4
   - 1.3 Product overview 5

2. Important information 9
   - 2.1 Safety information 9
   - 2.2 Environmental information 11
   - 2.3 Regulatory information 12

3. Cleaning the display 15
   - 3.1 Cleaning instructions 15
   - 3.2 EMC Notice 16

4. Monitor installation 23
   - 4.1 Installation procedure 23
   - 4.2 Stand removal & VESA mount installation 24

5. Daily operation 27
   - 5.1 Main power switch 27
   - 5.2 Power/Status indication 27

6. OSD menu operation 28
   - 6.1 On-Screen Display 28
   - 6.2 Menu Descriptions 28
   - 6.3 OSD Structure 28
   - 6.4 Main Menu 30
     - 6.4.1 Exit..... 30
     - 6.4.2 Auto Setup (Only Support Analog) 30
     - 6.4.3 Brightness 31
     - 6.4.4 Contrast... 31
     - 6.4.5 Display (Only Support Analog) 31
     - 6.4.6 Color Mode 32
     - 6.4.7 Audio..... 33
     - 6.4.8 Clock / Phase (Only Support Analog) 34
     - 6.4.9 Management 35
     - 6.4.9.1 Scaling..... 35
     - 6.4.9.2 OSD Display 36
     - 6.4.9.3 Language.. 36
     - 6.4.9.4 Source 37
     - 6.4.9.5 Power Key Lock 37
     - 6.4.9.6 Recall..... 38
     - 6.4.10 Operating Hours 38
   - 6.5 Supported Video Modes 39

7. Technical specifications 40

8. Outline Dimension 3

Revision History

The revision letter changes with related comments each time the document is updated.

REV.	Comment	DATE
0	Initial release of this document	2021/5/4
1	Revise content	2021/7/30
2	Update safety information	2021/9/10

1. Introduction

1.1 Monitor description

The equipment is applied for healthcare that is intended for general use in hospital environment for data collection and display for reference. It shall not be used with life support system or for medical diagnosis. It may provide simple image review software functionality for medical image processing and manipulation, such as grayscale window and level, zoom and pan, user delineated geometric measurements, compression, or user added image annotations. The device does not perform advanced image processing or complex quantitative functions. This does not include electronic transfer of medical image software functions.

Intended Use
This monitor is only used to display and review medical digital images and can be used as a part of the medical system for diagnosis. Complete diagnostic capabilities are provided by the medical system.

1.2 Box contents

- 27” LCD Touch Screen Monitor/ 27” LCD Monitor
- User Guide
- AC Power Cord
- VGA Cable
- DVI Cable
- USB Cable (for touch version)
- Power Adapter (Delta 24V)

(Optional)

- Audio Cable
- RS232 Cable
- DP Cable

1.3 Product overview

Front View

The image below shows the front view of the display.

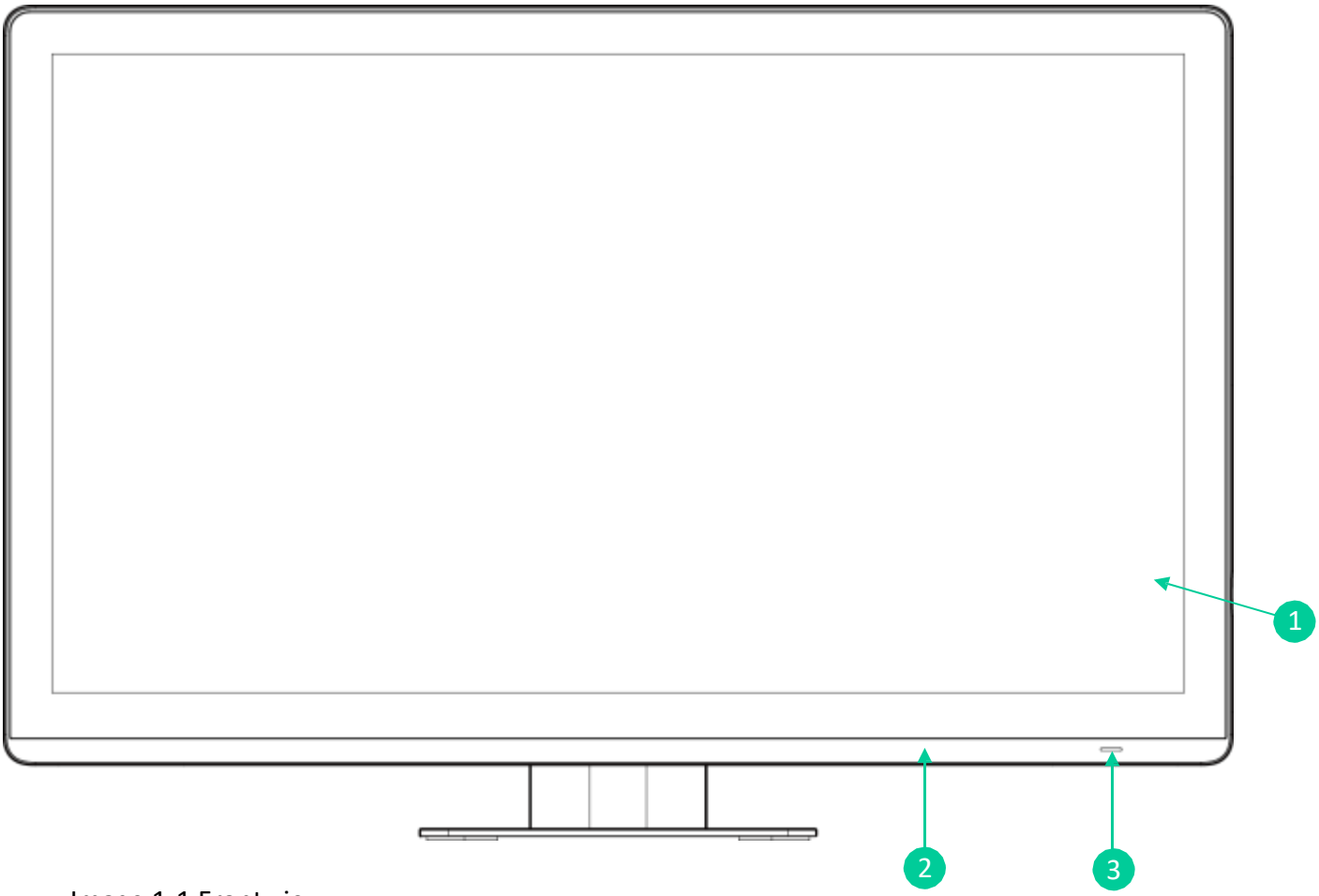

Image 1-1 Front view

1. P-CAP touch Cover glass
2. Bezel
3. LED

Side View

The image below shows the control keys located in the right bottom corner of the display.

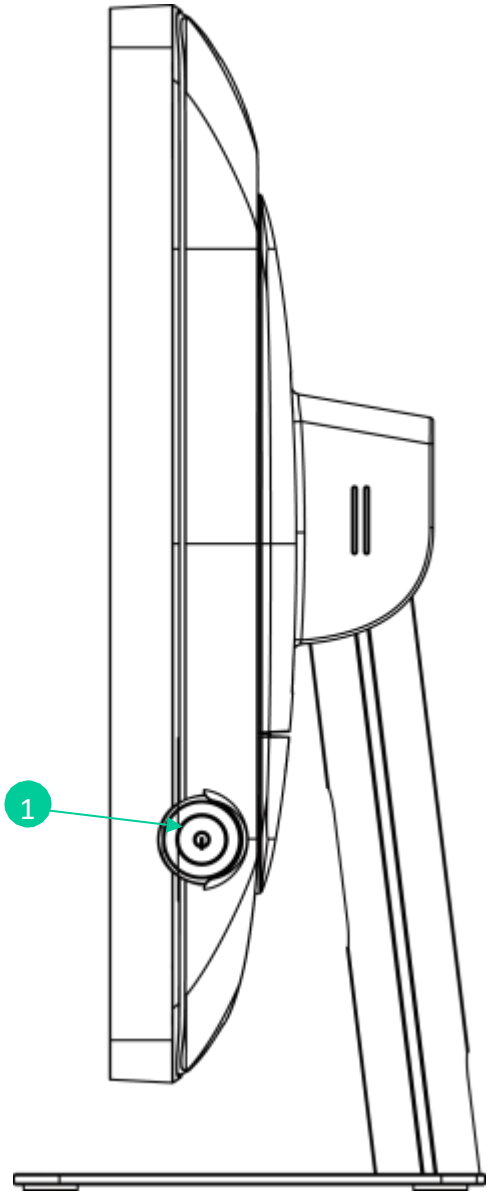

Image 1-2 Control Key

1. Menu / Enter key / Scrolling key

Rear View

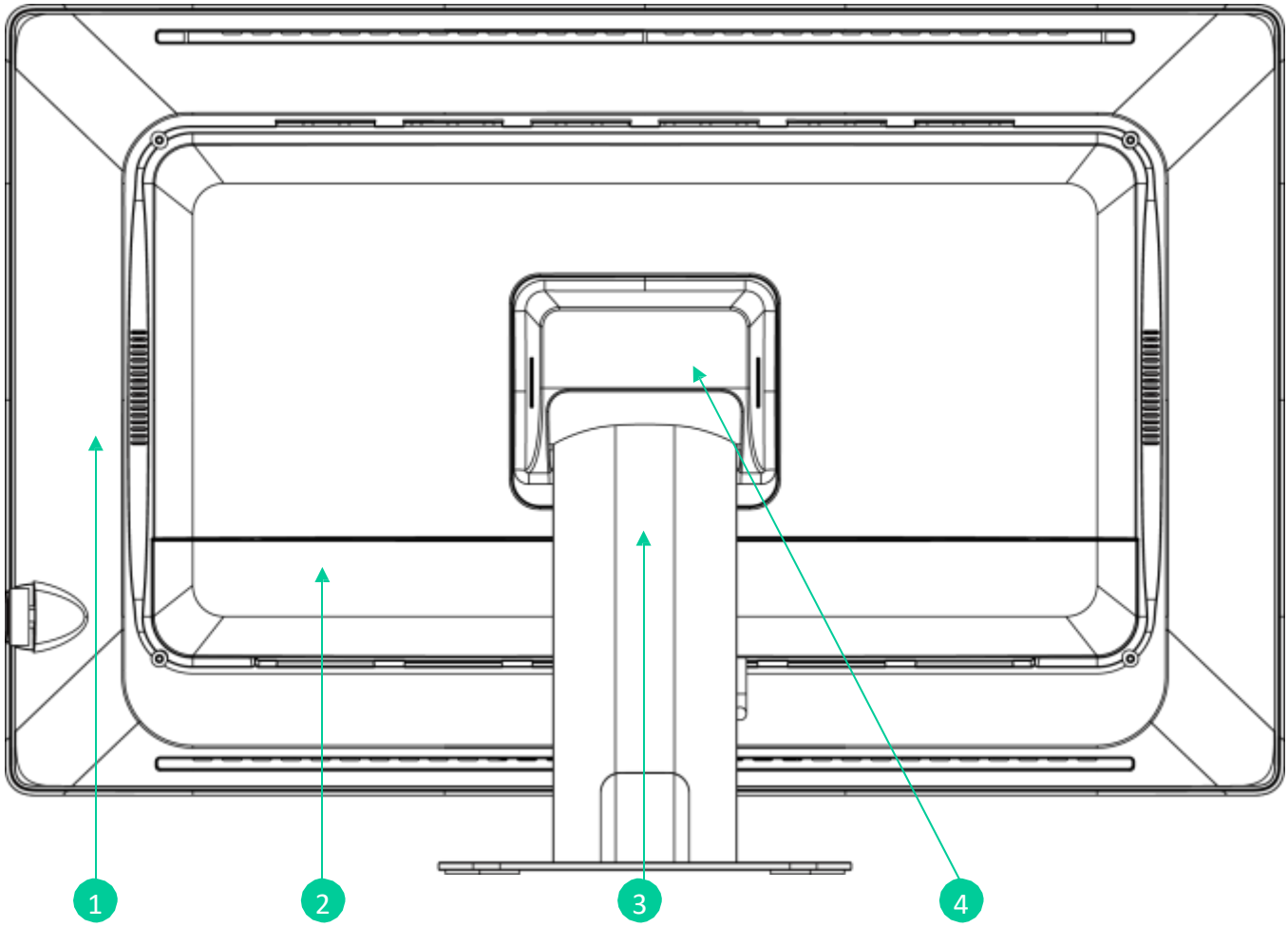

Image 1-3 Rear view

1. Rear cover
2. IO cover
3. Monitor stand
4. Hinge cover

Available Connections

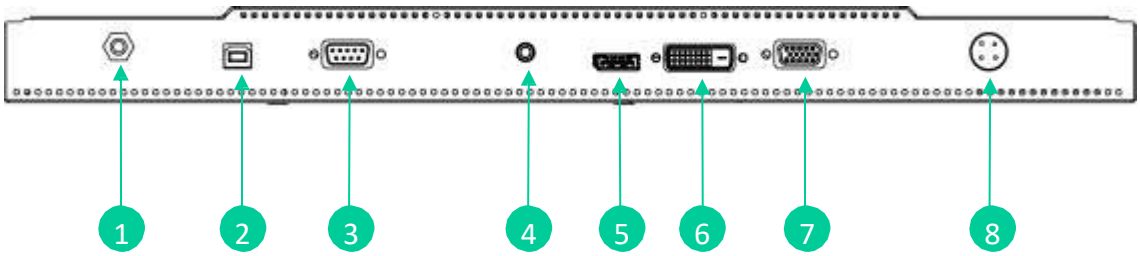

Image 1-4 Available connections (bottom view)

1. ⏚
2. USB
3. RS232
4. Audio
5. Display Port
6. DVI
7. VGA
8. POWER

2. Important information

2.1 Safety information

General recommendations

Read the safety and operating instructions before operating the device. Save the safety and operating instructions for future reference.
Adhere to all warnings on the device and in the operating instructions manual. Follow all instructions for operation and use.

Electrical Shock or Fire Hazard

To prevent an electrical shock or fire hazard, do not remove the cover.

No serviceable parts are inside. Refer servicing to qualified personnel. Do not expose this apparatus to rain or moisture.

Modifications to the unit:

Do not modify this equipment without authorization of the manufacturer.

Degree of safety (flammable anesthetic mixture):

Equipment is not suitable for use in the presence of a flammable anesthetic mixture of air, oxygen, or nitrous oxide.

Non-patient care equipment

- Equipment primarily for use in a health care facility. It is intended for use when contact with a patient is unlikely (no applied part).
- The equipment may not be used with life support equipment.
- The user should not touch the equipment, nor its signal input ports (SIP) /signal output ports (SOP) and the patient at the same time.

Mission critical applications

We strongly recommend for there to be a replacement monitor immediately available in mission critical applications.

Power connection – Equipment with internal power supply

- This equipment must be grounded.
- Power requirements: The equipment must be powered by the DC mains voltage.
- The equipment is intended for continuous operation.

Ergonomics

- Position your monitor no closer than 40 cm and no further away than 70 cm from your eyes. The optimal distance is 50cm.
- Use the preset Color Setting. Do not use primary color blue on a dark background, as it is difficult to see and may produce eye fatigue to insufficient contrast.
- Adjust the monitor height so that the top of the screen is at or slightly below eye level. Your eyes should look slightly downward when viewing the middle of the screen.

Power cords:

- Do not overload wall outlets and extension cords as this may result in fire or electric shock.
- Main leads protection (U.S.: Power cord): Power cords should be routed so that they are not walked upon or pinched by items placed upon or against them. Pay particular attention to cords at plugs and receptacles.
- The power supply cord should be replaced by the designated operator only at all time.
- Use a power cord that matches the voltage of the power outlet, which should be approved and in compliance with the safety standard of your particular country.
- Avoid placing the monitor near places that is hard to reach or difficult to disconnect the power supply cord.
- "WARNING: To avoid risk of electric shock, this equipment must only be connected to a supply mains with protective ground"
- For ME EQUIPMENT provided with NEMA configuration non-locking plug types 120V/ 15 A, 125V/ 15A, 250V/ 20A, maximum 3 m long, "Hospital Grade" mains plug shall be provided and the POWER SUPPLY CORD shall be marked.

Grounding reliability

Grounding reliability can only be achieved when the equipment is connected to an equivalent receptacle.

Liquids and moisture

Never expose the monitor to liquids or moisture.

Never use the monitor near water - e.g. near a bathtub, washbasin, swimming pool, kitchen sink, laundry tub or in a wet basement.

Ventilation

Do not cover or block any ventilation openings in the cover of the set. When installing the device in a cupboard or another closed location, heed the necessary space between the set and the sides of the cupboard.

Installation

Place the device on a flat, solid, and stable surface that can support the weight of at least 3 devices. If you use an unstable cart or stand, the device may fall, causing serious injury to a child or adult, and serious damage to the device.

Accessory equipment connected to the analog and digital interfaces must be in compliance with the respective nationally harmonized IEC standards (i.e. IEC 60601-1 for medical equipment.) Furthermore all configurations shall comply with the system standard in IEC 60601-1. Anyone who connects additional equipment to the signal input part or signal output part is configuring a medical system, and is therefore, responsible that the system complies with the requirements of the system standard IEC 60601-1. The unit is for exclusive interconnection with IEC 60601-1 certified equipment in the patient environment and IEC 60XXX certified equipment outside of the patient environment.

Contraindications

This monitor is not intended to be used for direct diagnosis and therapeutic interventional Radiology for reference only. No part of this product may come in contact with a patient. Never touch the product and a patient at the same time. The equipment not suitable for use in the presence of a flammable anesthetic mixture with air or with oxygen or nitrous oxide; Not AP or APG Category.

Personal Allergy History: Users should avoid use if they have an allergic reaction to any of the ingredients in this product.

2.2 Environmental information

Disposal Information

Waste Electrical and Electronic Equipment



This symbol on the product indicates that under the European Directive 2012/19/EU, governing waste from electrical and electronic equipment, this product must not be disposed of with other municipal waste. Please dispose of your waste equipment by handing it over to a designated collection point for the recycling of waste electrical and electronic equipment. To prevent possible harm to the environment or human health from uncontrolled waste disposal, please separate these items from other types of waste and recycle them responsibly to promote the sustainable reuse of material resources.

For more information about recycling of this product, please contact your local city office or your municipal waste disposal service.

ROHS

EU Directive 2011/65/EC & 2015/863/EU; EN IEC 63000:2018(IEC 63000:2016);
On the restriction of certain hazardous substances in electrical and electronic equipment.
This product is RoHS compliant.

2.3 Regulatory information

FCC class B

This device complies with Part 15 of the FCC Rules. Operation is subject to the following two conditions:
(1) This device may not cause harmful interference, and (2) this device must accept any interference received, including interference that may cause undesired operation.

This device has been tested and found to comply with the limits for a Class B digital device, pursuant to Part 15 of the FCC Rules. These limits are designed to provide reasonable protection against harmful interference in a residential installation. This device generates uses and can radiate radio frequency energy and, if not installed and used in accordance with the instructions, may cause harmful interference to radio communications. However, there is no guarantee that interference will not occur in a particular installation. If this device does cause harmful interference to radio or television reception, which can be determined by turning the device off and on, the user is encouraged to try to correct the interference by one or more of the following measures:

- Reorient or relocate the receiving antenna.
- Increase the separation between the device and receiver.
- Connect the device to an outlet on a circuit different from that to which the receiver is connected.
- Consult the dealer or an experienced radio/TV technician for help.

Changes or modifications not expressly approved by the party responsible for compliance could void the user's authority to operate the equipment.

Canadian notice

This ISM device complies with Canadian ICES-003.

Cet appareil ISM est conforme à la norme NMB-003 du Canada.

2.4 Equipment Symbols

Electrical and electronic equipment symbols

CE	Indicates the device meets the requirements of the applicable EC directives. Indique que l'appareil satisfait aux exigences des directives CE en vigueur.
FC	Indicates compliance with Part 15 of the FCC rules Indique la conformité à la partie 15 des règles de la FCC.
TÜV SÜD C US	Indicates the device is approved according to the TUV regulations for Canada and US Indique que l'appareil est approuvé conformément à la réglementation TUV pour le Canada et les États-Unis.
	Indicates the USB connectors on the device Indique les connecteurs USB sur le périphérique.
	Indicates the Display Port connectors on the device. Indique les connecteurs du port d'affichage sur l'appareil.
	Indicates the legal manufacturer. Indique le fabricant légal.
	Indicates the manufacturing date. Indique la date de fabrication.
xx yy	Temperature limit (for Transport/Storage) Limite de température (pour le transport / stockage)
%	Storage humidity range(for Transport/Storage). Plage d'humidité de stockage (pour le transport / stockage)
	Atmospheric Pressure(for Transport/Storage). Pression atmosphérique (pour le transport / stockage)
SN	Indicates the device serial number Indique le numéro de série de l'appareil.
REF	Indicates the device part number or catalog number Indique le numéro de référence de l'appareil ou le numéro de catalogue.
	Warning: dangerous voltage AVERTISSEMENT : Tension dangereuse

	Caution ATTENTION
	Consult accompanying documents. Consultez les documents accompagnés.
	Indicates this device must not be thrown in the trash but must be recycled, according to the European WEEE (Waste Electrical and Electronic Equipment) directive. Indique que cet appareil ne doit pas être jeté à la poubelle mais doit être recyclé, conformément à la directive européenne DEEE (déchets d'équipements électriques et électroniques).
	Indicates Direct Current (DC) Indique le courant continu (DC).
	Indicates Alternating Current (AC) Indique le courant alternatif (AC).
	Stand-by or power indicator. Indicateur de veille ou d'alimentation.
	Power ON. Power connection to the mains. Allumer. Raccordement électrique au réseau.
	Power OFF Éteindre.
	Protective earth (ground) Protection par mise à la terre (masse).
	Equipotentiality. Connect device to a potential equalization conductor. Équipotentialité. Raccordez l'appareil à un conducteur de liaison équipotentielle.

3. Cleaning the display

3.1 Cleaning instructions

To clean the display

Cleaning the display using a sponge, cleaning cloth, or soft tissue with lightly moistened recognized cleaning product for medical equipment. Read and follow all labeled instructions on the cleaning product. In case of doubt about a certain cleaning product, use plain water.

CAUTION:

- **Take care not to damage or scratch the front glass or LCD. Be careful with rings or other jewelry and do not apply excessive pressure on the front glass or LCD.**
- **Do not apply or spray liquid directly to the display as excess liquid may cause damage to internal electronics. Instead, apply the liquid to a cleaning sponge, cloth, or tissue.**

ATTENTION :

- **Veillez à ne pas endommager ou rayer la vitre avant ou l'écran LCD. Soyez prudent lorsque vous portez des bagues ou autres bijoux et n'appliquez pas une pression excessive sur le verre avant ou l'écran LCD.**
- **N'appliquez ou ne vaporisez pas de liquide directement sur l'écran car l'excès de liquide peut endommager l'électronique interne. Appliquez plutôt le liquide sur une éponge, un chiffon ou un mouchoir en papier.**

3.2 EMC Notice

Guidance and Manufacturer's Declaration – Electromagnetic Emissions

EMI

The monitor is intended for use in the electromagnetic environment specified below. The customer or the user of the monitor should assure that it is used in such an environment.

Emissions test	Compliance	Electromagnetic environment – Guidance
RF emissions CISPR 11	Group 1	The monitor uses RF energy only for its internal function. Therefore, its RF emissions are very low and are not likely to cause any interference with nearby electronic equipment.
RF emissions CISPR 11	Class B	The monitor is suitable for use in all establishments, including domestic establishments and those directly connected to the public low-voltage power supply network that supplies buildings used for domestic purposes.
Harmonic emissions IEC 61000-3-2	Class D	
Voltage fluctuations/ flicker emissions IEC 61000-3-3	Complies	

EMS

The monitor is intended for use in the electromagnetic immunity environment (Home healthcare environment defined in IEC60601-1-2) specified below. The customer or the user of the monitor should assure that it is used in such an environment.

Immunity test	**IEC 60601 Test levels**	**Compliance level**	**Electromagnetic environment – guidance**
Electrostatic discharge (ESD) IEC 61000-4-2	± 8kV contact ± 15kV air	± 8kV contact ± 15kV air	Floors should be wood, concrete or ceramic tile. If floors are covered with synthetic material, the relative humidity should be at least 30%
Electrical fast transient/burst IEC 61000-4-4	± 2kV for power supply lines ± 1kV for input/ output lines	± 2kV for power supply lines	Mains power quality should be that of a typical commercial or hospital environment
Surge IEC61000-4-5	± 1 kV line(s) to line(s) ± 2 kV line(s) to earth	± 1 kV line(s) to line(s) ± 2 kV line(s) to earth	Mains power quality should be that of a typical commercial or hospital environment
Voltage dips, short interruptions and voltage variations on power supply input lines IEC 61000-4-11	0% residual voltage for 0.5 cycle. 0% residual voltage for 1 cycle. 70% residual voltage for 0.5s. 0% residual voltage for 5s.	0% residual voltage for 0.5 cycle. 0% residual voltage for 1 cycle. 70% residual voltage for 0.5s. 0% residual voltage for 5s.	Mains power quality should by that of a typical commercial or hospital environment. If the user of the monitor requires continued operation during power mains interruptions, it is recommended that the monitor be powered from an uninterruptible power supply or a battery.
Power frequency (50/60 Hz) magnetic field IEC 61000-4-8	30 A/m 50Hz or 60Hz	30 A/m 50Hz or 60Hz	Power frequency magnetic fields should be at levels characteristic of a typical location in a typical commercial or hospital environment.

Immunity test	IEC 60601 Test levels	Compliance level	Electromagnetic environment – guidance
Conducted RF IEC 61000-4-6 Radiated RF IEC 61000-4-3	3 V at 0,15 - 80MHz 6 V at ISM bands 10 V/m 80 MHz to 2.7 GHz	3 V at 0,15 - 80MHz 6 V at ISM bands 10 V/m 80 MHz to 2.7 GHz	Portable and mobile RF communications equipment should be used no closer to any part of the monitor, including cables, than the recommend separation distance calculated from the equation applicable to the frequency of the transmitter. Recommended separation distance **d = 1.2√P** **d = 1.2√P** 80 MHz to 800 MHz **d = 2.3√P** 800 MHz to 2.5 Ghz Where P is the maximum output power rating of the transmitter in watts (W) according to the transmitter manufacturer and d is the recommended separation distance in meters (m). Field strengths from fixed RF transmitters, as determined by an electromagnetic site survey,[5] should be less than the compliance level in each frequency range.[6] Interference may occur in the vicinity of equipment marked with symbol: 
Proximity magnetic fields IEC 61000-4-39	8 A/m 30 kHz; CW modulation 65 A/m 134.2 kHz; Pulse modulation 2.1 kHz, 50 % duty cycle 7.5 A/m 13.56 MHz; Pulse modulation 50 kHz, 50 % duty cycle	8 A/m 30 kHz; CW modulation 65 A/m 134.2 kHz; Pulse modulation 2.1 kHz, 50 % duty cycle 7.5 A/m 13.56 MHz; Pulse modulation 50 kHz, 50 % duty cycle	/

NOTE 1：UT is the a.c. mains voltage prior to application of the test level.
NOTE 2：At 80 MHz and 800 MHz, the higher frequency range applies.
NOTE 3：Guidelines regarding conducted disturbances induced by RF fields or radiated RF fields may not apply in all situations. Electromagnetic propagation is affected by absorption and reflection from structures, objects and people.
NOTE 4：The ISM (industrial, scientific and medical) bands between 0.15 MHz and 80 MHz are 6.765 MHz to 6.795 MHz; 13.553 MHz to 13.567 MHz; 26.957 MHz to 27.283 MHz; and 40.66 MHz to 40.70 MHz . The amateur radio bands between 0.15 MHz and 80 MHz are 1.8 MHz to 2.0 MHz, 3.5 MHz to 4.0 MHz, 5.3 MHz to 5.4 MHz, 7 MHz to 7.3 MHz, 10.1 MHz to 10.15 MHz, 14 MHz to 14.2 MHz, 18.07 MHz to 18.17 MHz, 21.0 MHz to 21.4 MHz, 24.89 MHz to 24.99 MHz, 28.0 MHz to 29.7 MHz and 50.0 MHz to 54.0 MHz.

a. Field strengths from fixed transmitters, such as base stations for radio (cellular/cordless telephones and land mobile radios, amateur radio, AM and FM radio broadcast and TV broadcast cannot be predicted theoretically with accuracy. To assess the electromagnetic environment due to fixed RF transmitters, an electromagnetic site survey should be considered. If the measured field strength in the location in which the monitor is used exceeds the applicable RF compliance level above, the monitor should be observed to verify normal operation. If abnormal performance is observed, additional measures may be necessary, such as reorienting or relocating the monitor.
b. Over the frequency range 150 kHz to 80 MHz, field strengths should be less than 10 V/m.

Recommended Separation Distance

The monitor is intended for use in an electromagnetic environment in which radiated RF disturbances are controlled. The customer of the user of the monitor can help prevent electromagnetic interference by maintaining a minimum distance between portable and mobile RF communications equipment (transmitters) and the monitor as recommended below, according to the maximum output power of the communications equipment.
Immunity to proximity fields from following RF wireless communication equipment has been confirmed:

Test frequency (MHz)	Bandwidth a) (MHz)	Service a)	Modulation b)	Maximum power (W)	Minimum separation distance (m)	IEC/EN60601 test level (V/m)	Compliance level (V/m)
385	380-390	TETRA400	Pulse modulation b)	1.8	0.3	27	27
450	430-470	GMRS 460, FRS 460	FM ±5 kHz deviation 1 kHz sine	2	0.3	28	28
710	704-787	LTE Band 13, 17	Pulse modulation b) 217 Hz	0.2	0.3	9	9
745							
780							
810	800-960	GSM 800 / 900, TETRA 800, iDEN 820 CDMA 850, LTE Band 5	Pulse modulation b) 18 Hz	2	0.3	28	28
871							
930							
1720	1700-1990	GSM 1800; CDMA 1900; GSM 1900; DECT; LTE Band 1, 3, 4, 25; UMTS	Pulse modulation b) 217 Hz	2	0.3	28	28
1845							
1970							
2450	2400-2570	Bluetooth, WLAN, 802.11 b/g/n, RFID 2450, LTE Band 7	Pulse modulation b) 217 Hz	2	0.3	28	28

5240 5500 5785	5100-5800	WLAN 802.11 a/n	Pulse modulation b) 217 Hz	0.2	0.3	9	9

- For some services, only the uplink frequencies are included.
- The carrier shall be modulated using a 50 % duty cycle square wave signal.

Rated maximum output power of transmitter W	Separation distance according to frequency of transmitter		
	150kHz to 80MHz d=1.2√P	80MHz to 800MHz d=1.2√P	800MHz to 2.5GHz d=2.3√P
0.01	0.12	0.12	0.23
0.1	0.38	0.38	0.73
1	1.2	1.2	2.3
10	3.8	3.8	7.3
100	12	12	23

For transmitters rated at a maximum output power not listed above, the recommended separation distance d in meters (m) can be estimated using the equation applicable to the frequency of the transmitter, where P is the maximum output power rating of the transmitter in watts (W) according to the transmitter manufacturer.
NOTE 1：At 80 MHz and 800 MHz, the separation distance for the higher frequency range applies.
NOTE 2：These guidelines may not apply in all situations. Electromagnetic propagation is affected by absorption and reflection from structures, objects and people.
NOTE 3 The EUT was stopped operating during the test, but it is self-recoverable after test.

At 80 MHz and 800 MHz, the higher frequency range applies.

These guidelines may not apply in all situations. Electromagnetic propagation is affected by absorption and reflection from structures, objects, and people.

⚠ **CAUTION** and ⚠ WARNING

1. The unit is for exclusive interconnection with IEC 60XXX certified equipment outside of patient environment and IEC 60601-1 certified equipment inside the patient environment.
2. This device complies with EN60601-1-2, To minimize the interference from other equipment, a minimum 0.5 m distance shall be kept form other potential electromagnetic sources, such as the Cell Phone.
3. The power cable connector is the primary means of detaching the system from the power supply. The monitor should be installed close to a power outlet, which is easily accessible.
4. Handle with care when transporting. Save packaging for transporting.
5. AC power inlet is considered as Disconnect Device.
6. To prevent fire or shock hazards, do not expose this unit to rain or moisture. Also, do not use this unit's polarized plug with an extension cord receptacle or other outlets unless the prongs can be fully inserted.
7. Do not modify this equipment without authorization of the manufacturer.
8. To prevent the risk of electric shock, make sure power cord is fully disengage the power to the unit. Please disconnect the power cord from the AC outlet.
9. To prevent electric shock, please do not remove cover or any internal components. Refer to a qualified technician for service.
10. This device is intended to be used (1) outside the "patient vicinity" area or (2) within the "patient vicinity" to the patient such as consulting rooms.
11. To avoid risk of electric shock, this equipment must only be connected to a supply mains with protective ground.
12. The LCD monitor become heat when it's working, please do not touch the panel and plastic enclosure over 10 seconds, and do not touch the mental enclosure on the back of the LCD monitor over 1 second.
13. For safety reasons, turn-off the power switch and unplug the monitor before cleaning.
14. Equipment with SIP/SOP connectors should either comply with IEC 60601-1 and/or IEC 60601-1-1 harmonized national standard or the combination should be evaluated.
15. Power cord shell be connected to a socket-out with earthing connection
16. The monitor series requires special precautions regarding EMC and need to be installed. You need to carefully read EMC Information and the "PRECAUTIONS" section in this document, and observe the following instructions when installing and operating the product.
17. The monitor series should not be used adjacent to or stacked with other equipment. If adjacent or stacked use is necessary, the equipment or system should be observed to verify normal operation in the configuration in which it will be used.
18. Anyone who connects additional equipment to the signal input part or signal output parts, configuring a Medical system, is responsible that the system complies with the requirements of IEC/EN60601-1-2.
19. Be sure to use the cables attached to the product, or cables specified by DIVA. Use of cables other than those specified or provided by DIVA of this equipment could result in increased electromagnetic emissions or decreased electromagnetic immunity of this equipment and improper operation.
20. If this equipment is modified, appropriate inspection and testing must be conducted to ensure continued safe use of the equipment.
21. CAUTION: Double pole, neutral fusing. Disconnect mains before servicing.

⚠ ATTENTION ET ⚠ AVERTISSEMENT

1. L'unité est destinée à une interconnexion exclusive avec des équipements certifiés IEC 60XXX en dehors de l'environnement du patient et des équipements certifiés IEC 60601-1 à l'intérieur de l'environnement du patient.
2. Cet appareil est conforme à la norme EN60601-1-2. Pour minimiser les interférences provenant d'autres équipements, une distance minimale de 0,5 m doit être maintenue par rapport à d'autres sources électromagnétiques potentielles, comme les téléphones cellulaires.
3. Le connecteur du cordon d'alimentation est le principal moyen de débrancher le système de l'alimentation électrique. Le moniteur doit être installé à proximité d'une prise de courant facilement accessible.
4. À manipuler avec précaution lors du transport. Conservez l'emballage pour le transport.
5. L'entrée d'alimentation CA est considérée comme un dispositif de déconnexion.
6. Pour éviter tout risque d'incendie ou de choc électrique, n'exposez pas cet appareil à la pluie ou à l'humidité. En outre, n'utilisez pas la fiche polarisée de cet appareil avec une prise de rallonge ou d'autres prises, à moins que les broches puissent être complètement insérées.
7. Ne pas modifier cet équipement sans l'autorisation du fabricant.
8. Pour éviter tout risque de choc électrique, assurez-vous que le cordon d'alimentation est débranché de la prise murale. Pour désactiver complètement l'alimentation de l'appareil, débranchez le cordon d'alimentation de la prise CA.
9. Pour éviter les chocs électriques, n'enlevez pas le couvercle ou des composants internes. Faites appel à un technicien qualifié pour l'entretien.
10. Ce dispositif est destiné à être utilisé (1) à l'extérieur de la zone « proximité du patient » ou (2) à l'intérieur de la zone « proximité du patient », par exemple dans les salles de consultation.
11. Pour éviter le risque de choc électrique, cet équipement doit être uniquement raccordé à un réseau d'alimentation avec protection par mise à la terre.
12. LCD L'écran LCD devient chaud lorsqu'il fonctionne, ne touchez pas le panneau et le boîtier en plastique pendant 10 secondes et ne touchez pas le boîtier mental à l'arrière du moniteur LCD pendant 1 seconde.
13. Pour des raisons de sécurité, éteignez l'interrupteur d'alimentation et débranchez le moniteur avant de le nettoyer.
14. Les équipements dotés de connecteurs SIP / SOP doivent être conformes à la norme nationale harmonisée CEI 60601-1 et / ou CEI 60601-1-1 ou la combinaison doit être évaluée.
15. Le connecteur du cordon d'alimentation est le principal moyen de débrancher le système de l'alimentation électrique. Le moniteur doit être installé à proximité d'une prise de courant facilement accessible.
16. La série de moniteurs nécessite des précautions particulières concernant EMC et doit être installée. Vous devez lire attentivement les informations EMC et la section « PRÉCAUTIONS » de ce document, et respecter les instructions suivantes lors de l'installation et de l'exploitation du produit.
17. La série de moniteurs ne doit pas être utilisée à côté ou empilée avec d'autres équipements. Si l'utilisation adjacente ou empilée est nécessaire, l'équipement ou le système doit être observé pour vérifier le fonctionnement normal dans la configuration dans laquelle il sera utilisé.
18. Quiconque relie des équipements supplémentaires à la pièce d'entrée du signal ou aux pièces de sortie du signal, configurant un système médical, est responsable que le système soit conforme aux exigences de l'IEC/EN60601-1-2.
19. Assurez-vous d'utiliser les câbles fixés au produit, ou les câbles spécifiés par DIVA. L'utilisation de câbles autres que ceux spécifiés ou fournis par DIVA de cet équipement pourrait entraîner une augmentation des émissions électromagnétiques ou une diminution de l'immunité électromagnétique de cet équipement et un mauvais fonctionnement.
20. Si cet équipement est modifié, des inspections et des essais appropriés doivent être effectués afin d'assurer une utilisation sécuritaire continue de l'équipement.
21. ATTENTION : Double poteau, neutre futilisation. Débranchez les conduites avant l'entretien.

4. Monitor installation

WARNING: Sufficient expertise is required to install this equipment. All devices and complete setup must be tested before operation.

4.1 Installation procedure

To install your monitor

To get access to the connectors, put the display on a flat surface.

1. Connect one or more video source(s) to the corresponding video inputs of the monitor.

Use the appropriate video cable(s) to do this.

2. Connect the USB or RS232 connector for touch screen function.
3. Connect the Audio cable for audio function.
4. Connect the power cord input to a power adapter with a grounded Power Outlet.
5. Connect the power adapter input to the monitor.
6. Install cable cover back on the monitor.

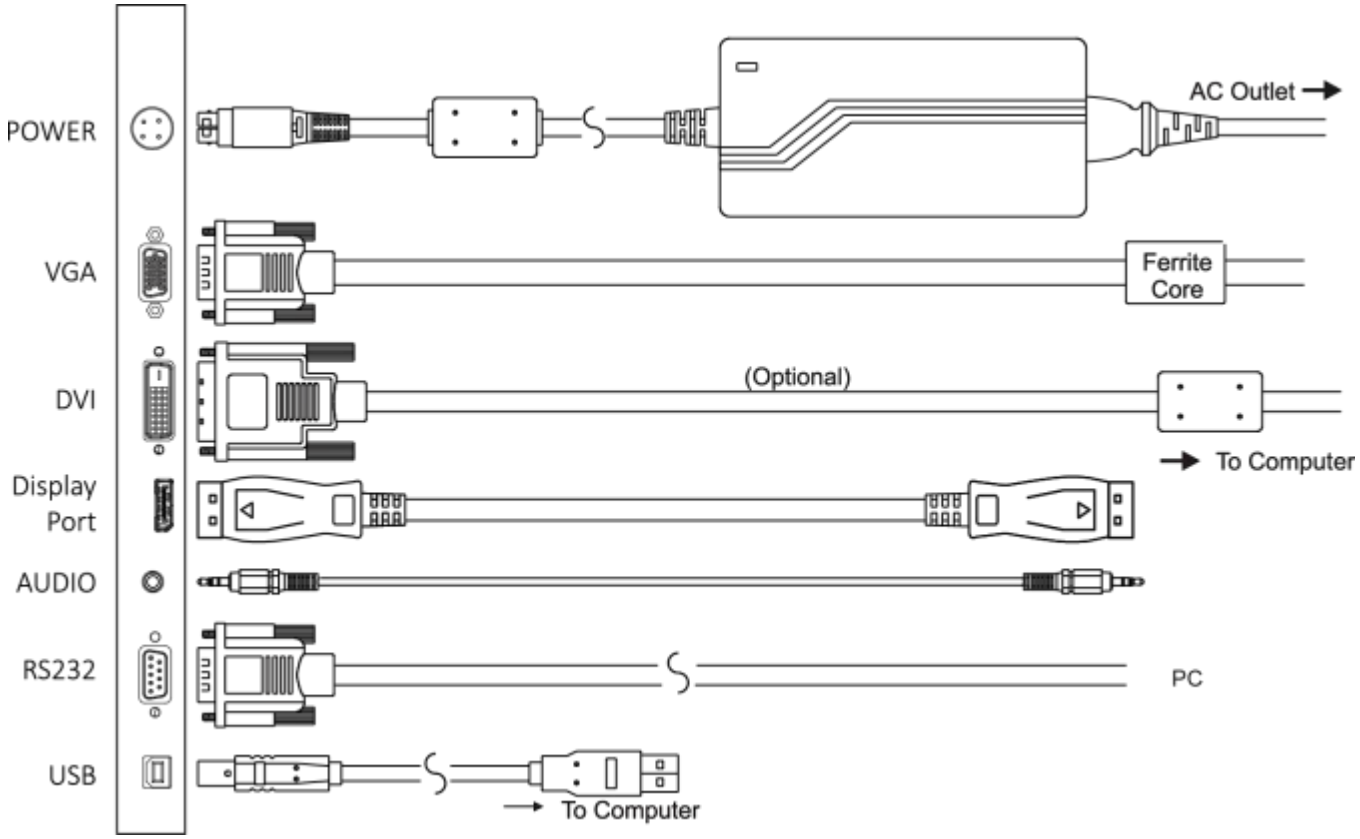

Image 4-1-1 Connectors

4.2 Stand removal & VESA mount installation

This monitor provided with a validated stand. The monitor has been designed to be used in landscape position with a maximum tilt of -5° to 30° backward. If a different stand is needed in the final application, the monitor VESA interface (VESA 100 mm standard) could be used.

To remove the stand and install the VESA mount

1. Place the monitor face down on a flat, solid and stable surface.
2. Remove the hinge cover
3. Unscrew the 4x M4 (length: 10mm) screws fixing the stand and rear cover
4. Remove the stand and install the VESA mount.

Caution: Use a protective cloth or cushion to prevent the monitor and LCD from any damage or scratches.

Tip: Store the fixation screws at a known place for possible future use.

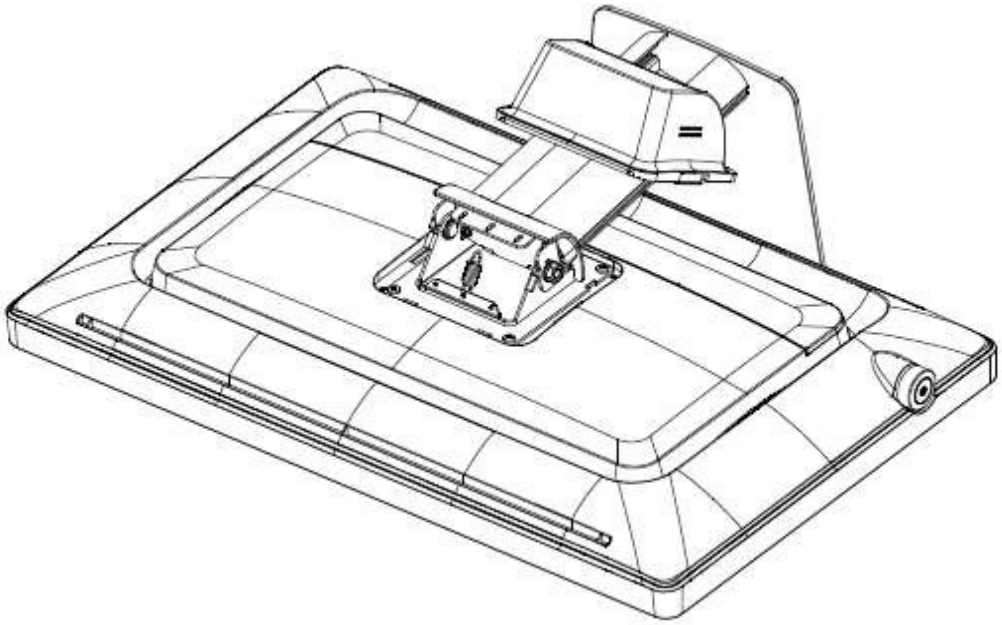

Image 4-2-1 Remove the hinge cover

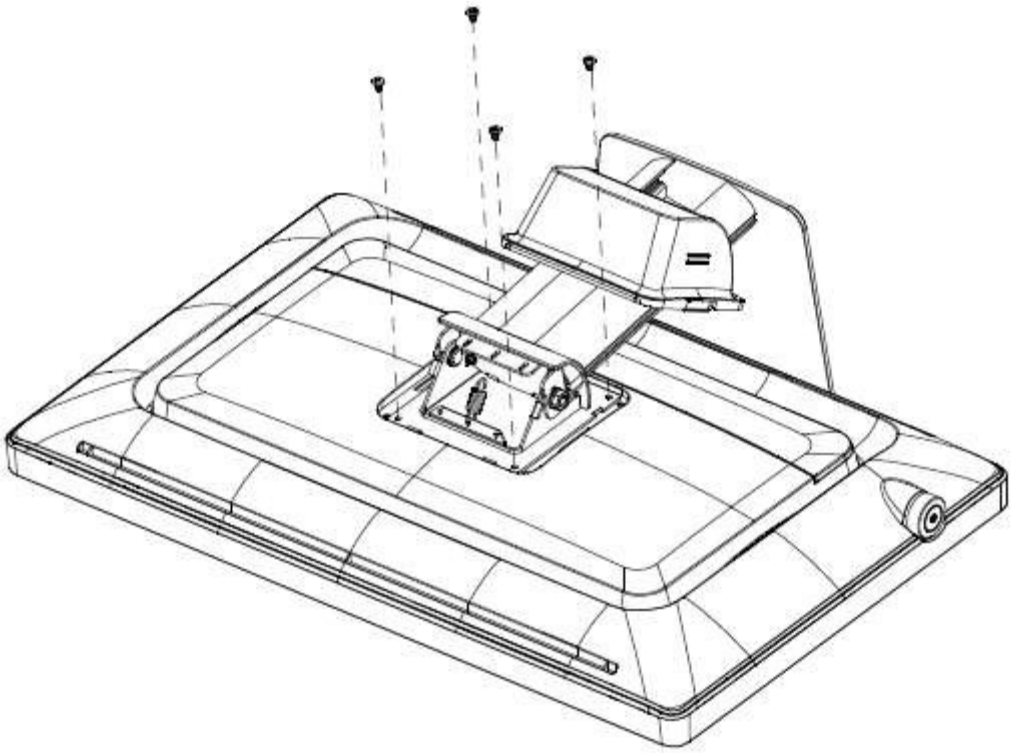

Image 4-2-2 Remove the 4x M4 screws

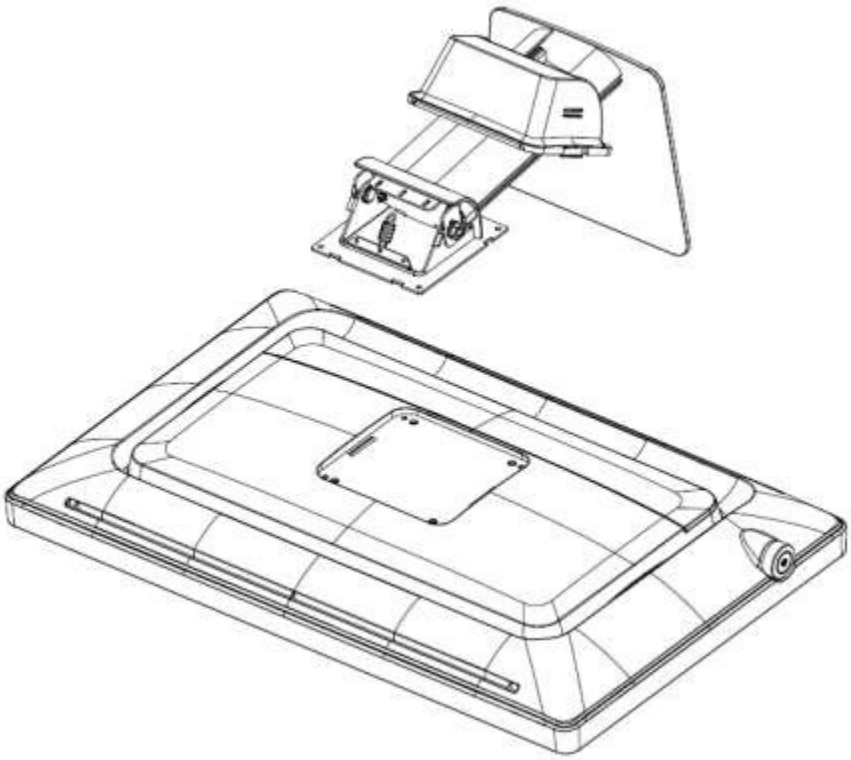

Image 4-2-3 Remove the stand from the monitor

5. Attach the monitor in landscape position to a 100 mm VESA mounting bracket. Mounting in portrait position is not feasible. To be installed by skilled person only.

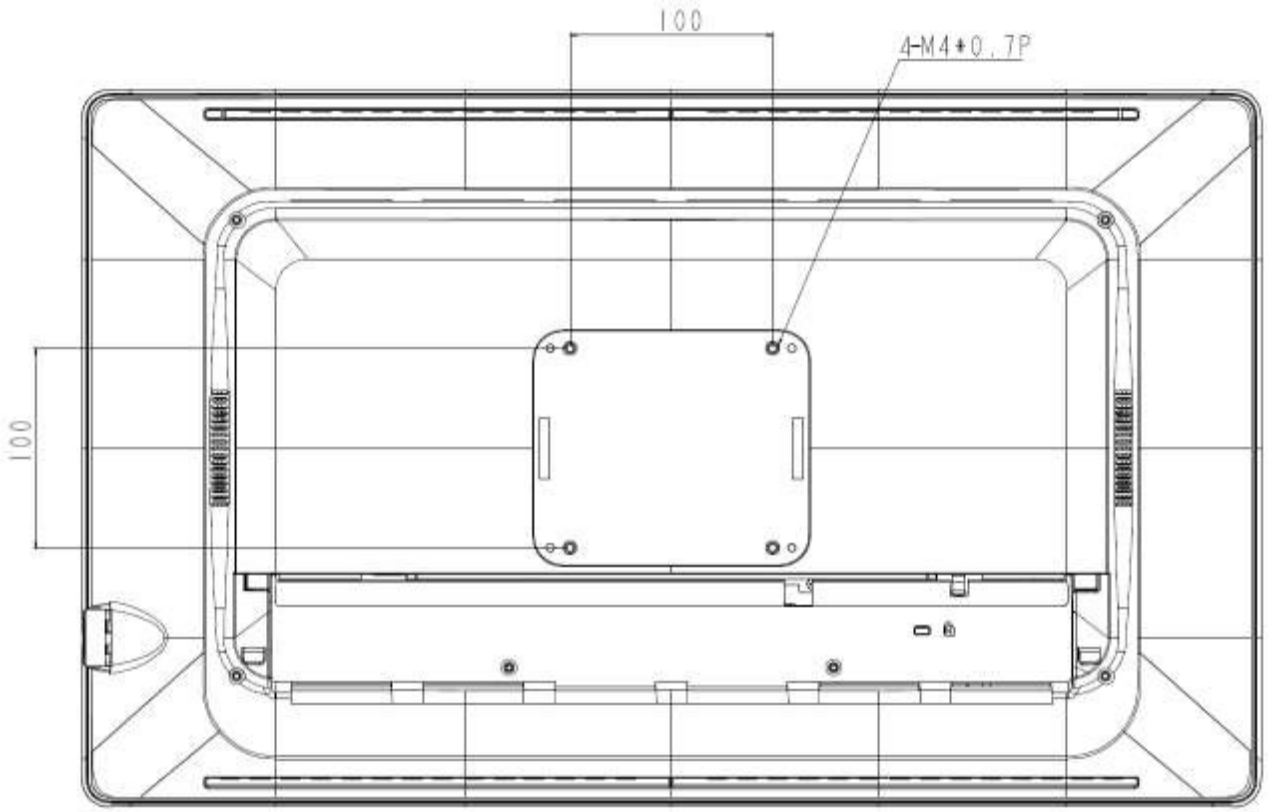

Image 4-2-4 VESA mount is located at the back of the monitor.

5. Daily operation

5.1 Main power switch

The monitor is switched on or off with the main switch, **sees image 1-2 Control key.**

5.2 Power/Status indication

During start-up the monitor performs signal detection before going into normal operation mode. Depending on the detection result, the status LED on the side of the monitor will show different LED color.

Below is an overview of the possible status LED modes:

LED Color	Status LED modes	Operation Description
OFF (No LED)	OFF mode	Monitor is not powered.
Green, static	Normal mode	Monitor is ON, video sync OK.
Orange/ Amber, static	Stand-by mode (Power saving)	Automatically enters power saving and standing by for input signal

6. OSD menu operation

The Charts displays the function tree and brief explanations of the functions. Color, OSD, and other adjustments have submenus under each tree.

6.1 On-Screen Display

The LCD monitor features an On-Screen Display (OSD) menu with easily identifiable icons designed to make adjustment of your monitor display settings a more user-friendly process. When highlighted, the icon illustrates the control function and brief instruction to assist the user in identifying which control needs adjustment.
The OSD menu is activated by pressing the Control Dial inward and you can select and adjust the function of your choice by rotating and clicking the Control Dial. The main menu displays a list of sub menu icons and the current video input mode. Rotate the dial to move the highlights to the control you would like to adjust, then press the Control Dial inward to select that control or to activate that function. Depending on the control you selected, a submenu of the control with a status bar will appear. The status bar indicates in which direction, form the factory preset; your adjustments are being made. Rotate the Control Dial to adjust the control.
When you have finished making the adjustments, the setting is saved automatically by activating the control function. If you do not touch the Control Dial for 30 seconds, the OSD is automatically exited saving your current settings.

6.2 Menu Descriptions

The LCD monitor is capable of accepting VGA, DVI (or HDMI), Display Port signal inputs and therefore has two different sets of OSD control functions. Because the digital signaling always achieves optimum display quality without mush adjustment, it requires much less OSD functions than the analog input mode. The following options are not available in digital input mode: Auto Setup, Display, Clock/Phase, denoted by as trick (*) in the following descriptions. If switched to digital input model, you will encounter a “Not Available” message.

6.3 OSD Structure

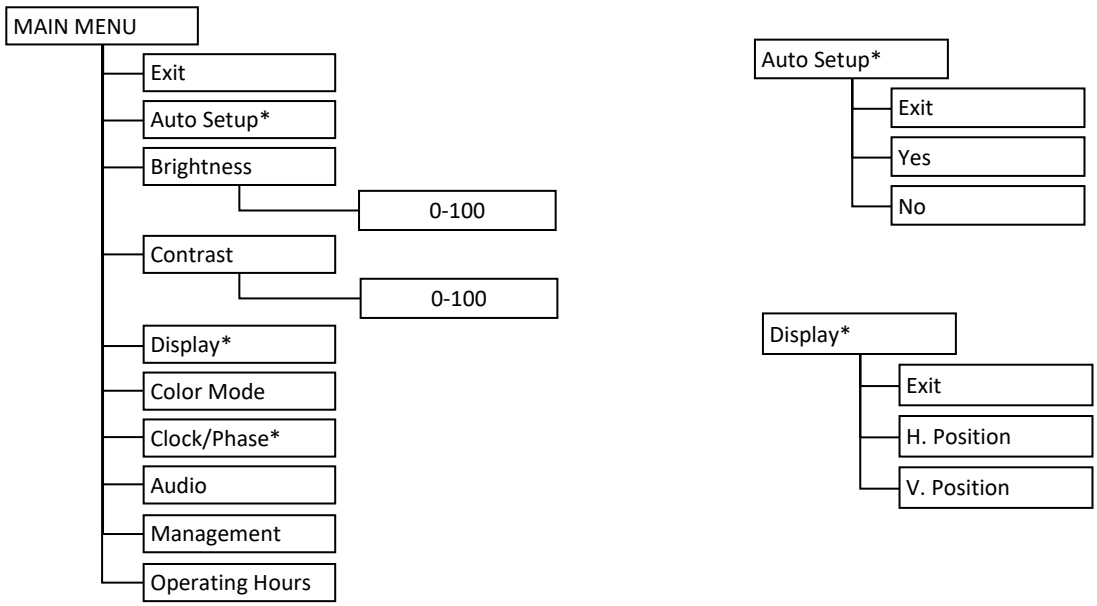

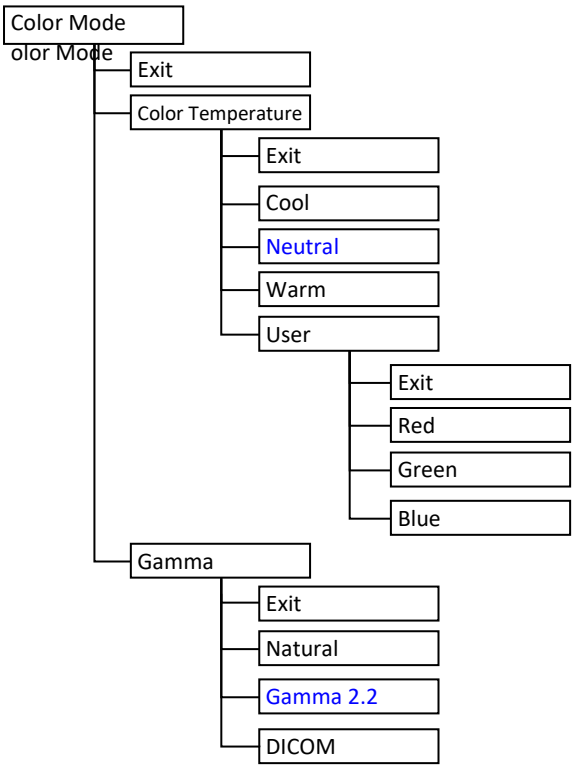

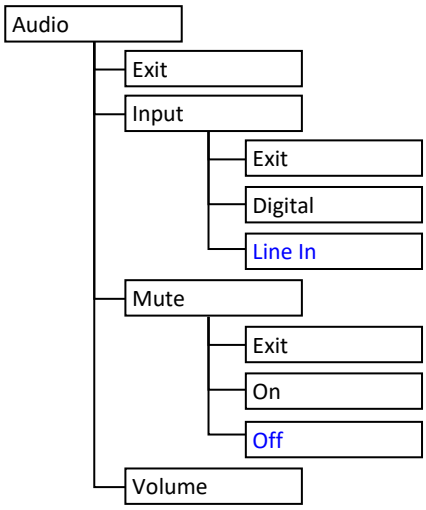

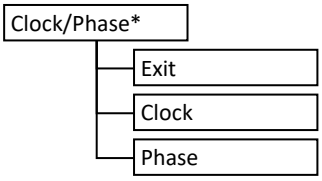

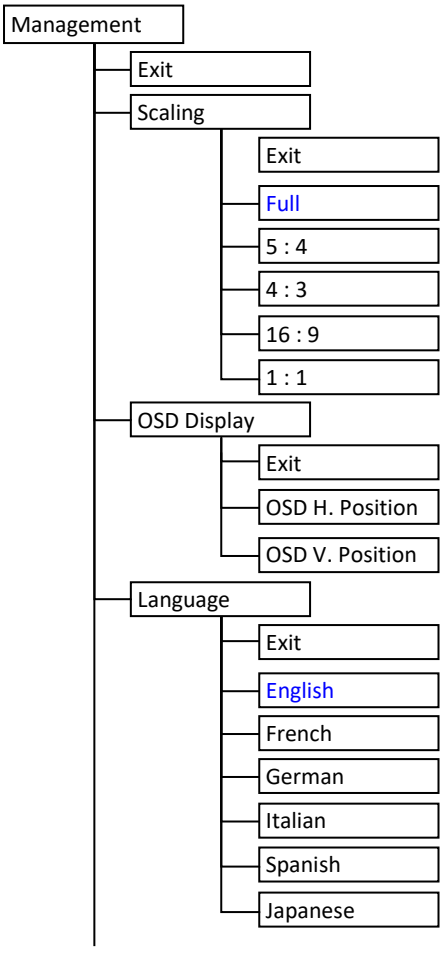

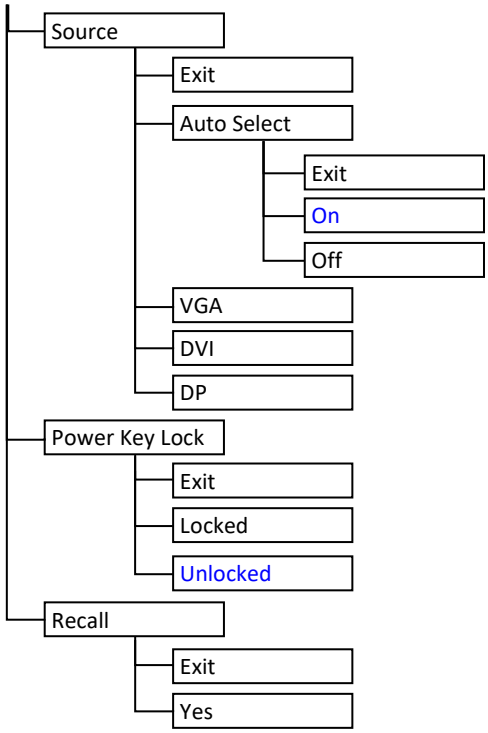

NOTE:
* Only Support Analog

6.4 Main Menu

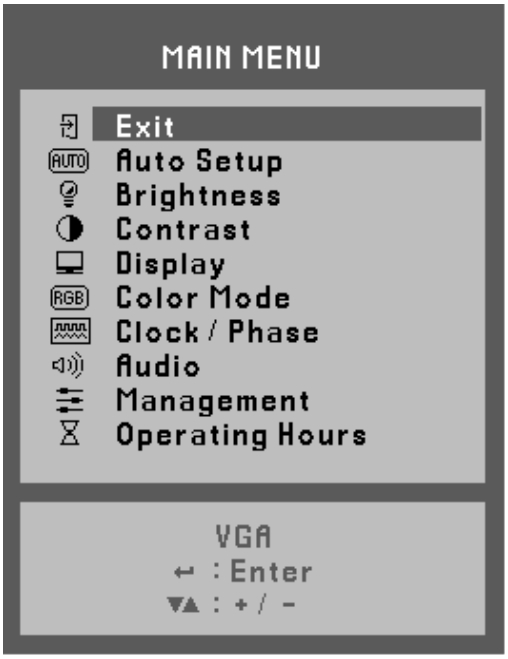

Image 6-4 Main OSD menu

6.4.1 Exit

Exit Current OSD Menu go back to previously.

6.4.2 Auto Setup (Only Support Analog)

Auto setup the image of an analog signal.

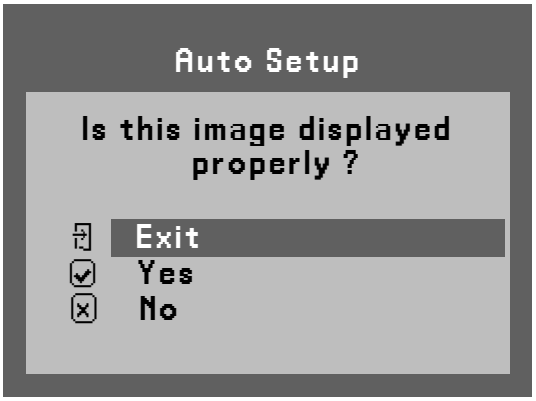

Image 6-4-2 Auto Setup OSD menu

6.4.3 Brightness

Adjust the brightness of the monitor.

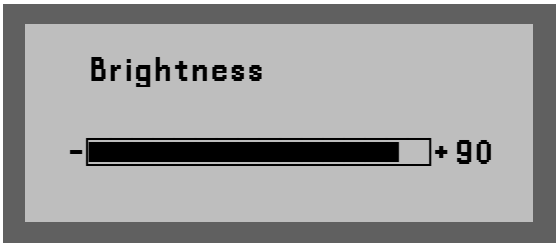

Image 6-4-3 Brightness OSD menu

6.4.4 Contrast

Adjust the contrast value.

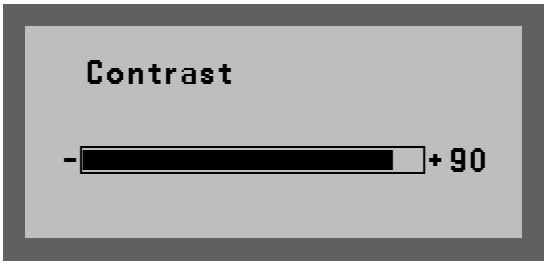

Image 6-4-4 Contrast OSD menu

6.4.5 Display (Only Support Analog)

Setup the image position on the screen.

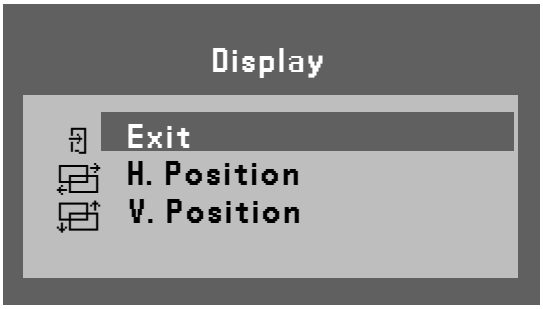

Image 6-4-5 Display OSD menu

- H. Position: Adjust the horizontal position of the analog image.

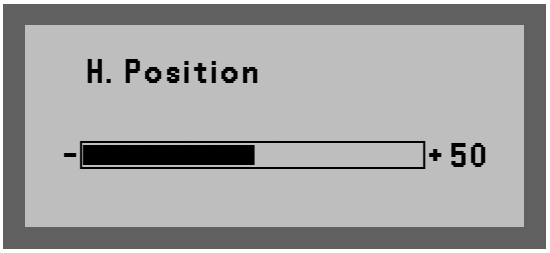

Image 6-4-5-1 H. Position OSD menu

- V. Position: Adjust the vertical positon of the analog image.

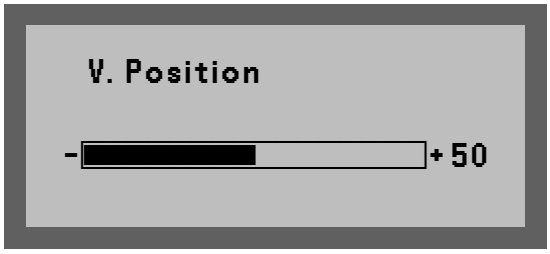

Image 6-4-5-2 V. Position OSD menu

6.4.6 Color Mode

Setup the Color Temperature and Gamma.



Image 6-4-6 Color Mode OSD menu

- Color Temperature: Setup the Color temperature.

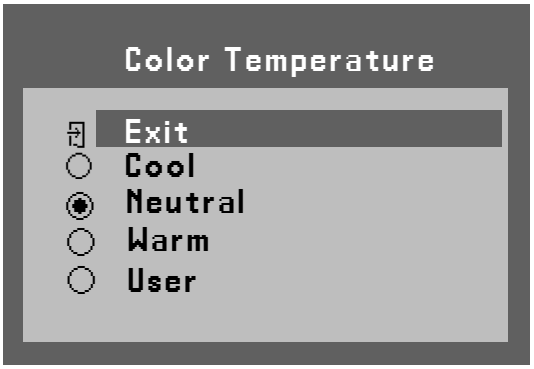

Image 6-4-6-1 Color Temperature OSD menu

- User: Adjust the color of the image independently.

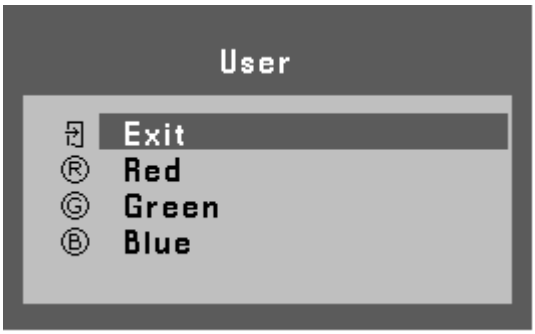

Image 6-4-6-2 User OSD menu

- Gamma: Setup different Gamma curve of the image.

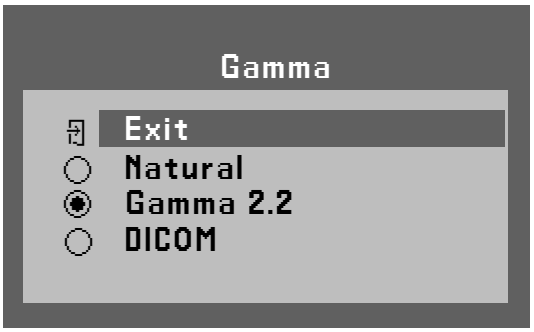

Image 6-4-6-3 Gamma OSD menu

6.4.7 Audio

Setup the audio functions.

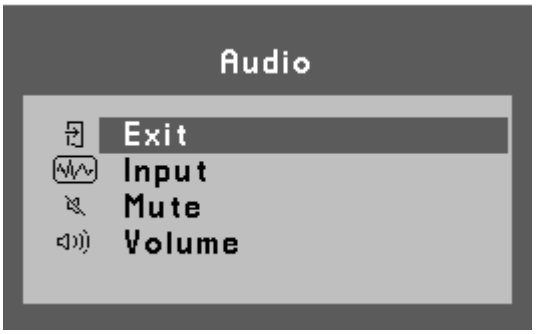

Image 6-4-7 Audio OSD menu

- Input: Select an input source of audio.

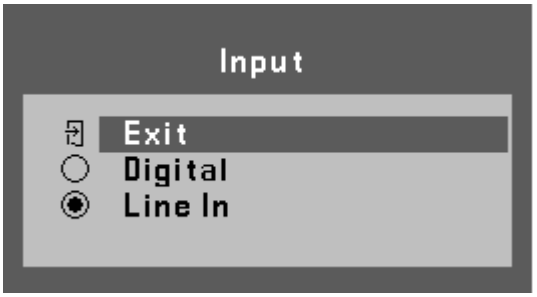

Image 6-4-7-1 Audio Input OSD menu

- Mute: To mute the audio.

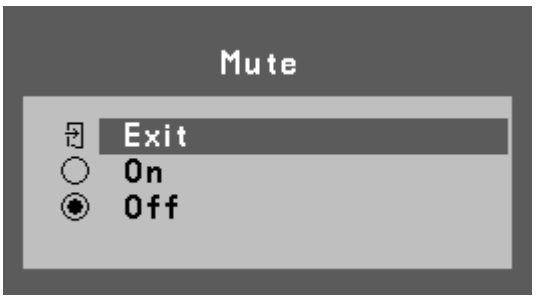

Image 6-4-7-2 Audio Mute OSD menu

- Volume: Volume output adjustment.

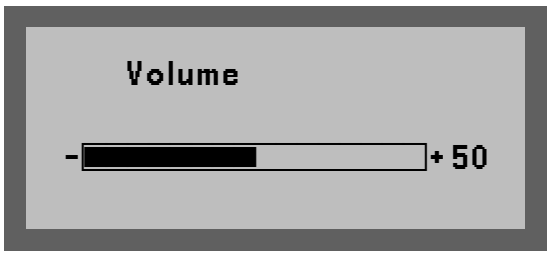

Image 6-4-7-3 Audio Volume OSD menu

6.4.8 Clock / Phase (Only Support Analog)

Adjust the clock or phase of an analog image manually.

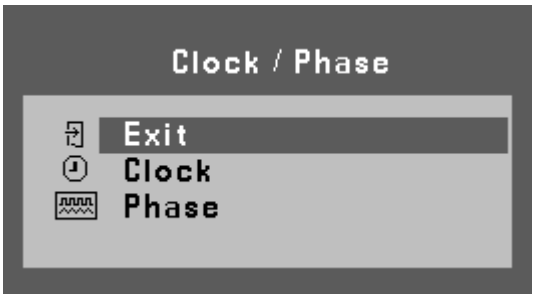

Image 6-4-8 Clock / Phase OSD menu

- Clock: Adjust the clock of the analog image manually if Auto Setup didn't catch the image correctly.

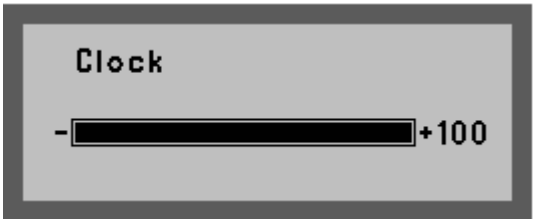

Image 6-4-8-1 Clock OSD menu

- Phase: Allows users to adjust the phase of the display setting manually.

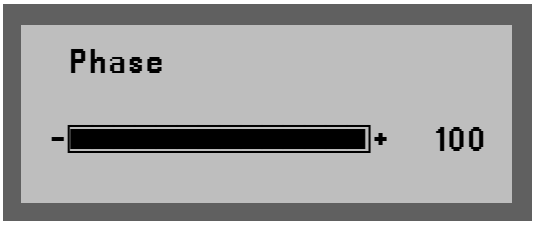

Image 6-4-8-2 Phase OSD menu

6.4.9 Management

To manage the monitor.

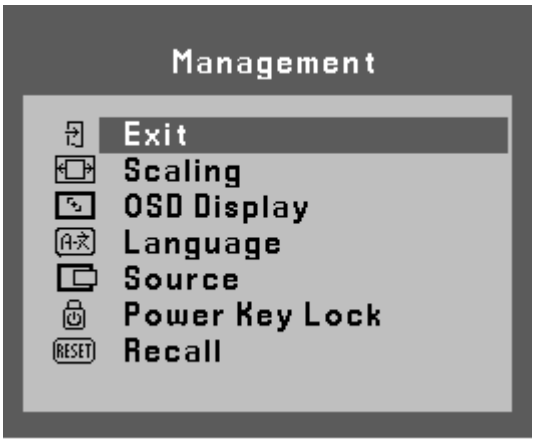

Image 6-4-9 Management OSD menu

6.4.9.1 Scaling

Setup the display ratio of the image.

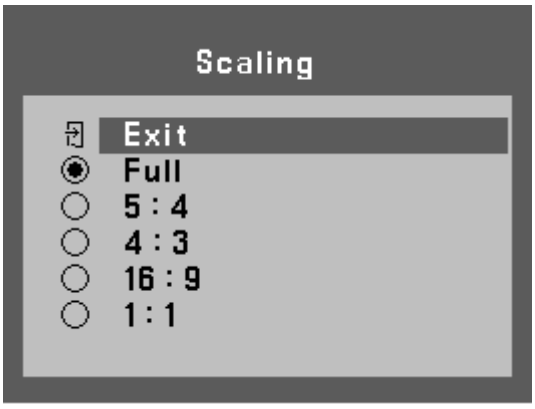

Image 6-4-9-1 Scaling OSD menu

6.4.9.2 OSD Display

Adjust the OSD position on the screen.

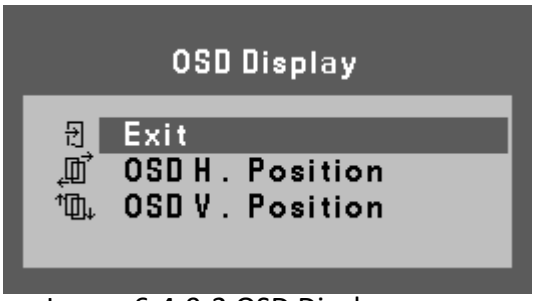

Image 6-4-9-2 OSD Display menu

- OSD H. Position: Adjust the OSD horizontal position on the screen.

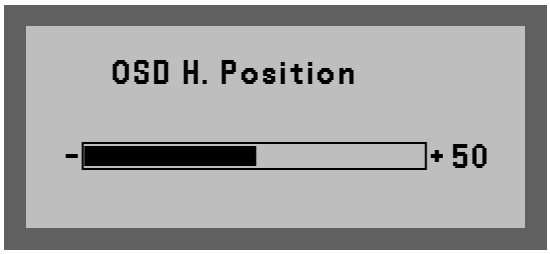

Image 6-4-9-2a OSD Horizontal Position OSD menu

- OSD V. Position: Adjust the OSD vertical position on the screen.

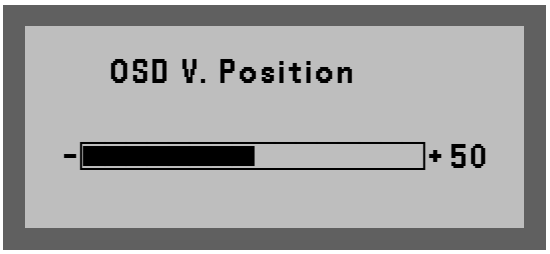

Image 6-4-9-2b OSD Vertical Position OSD menu

6.4.9.3 Language

Select this item to change the OSD language.



Image 6-4-9-3 Language OSD menu

6.4.9.4 Source

Select an input source.

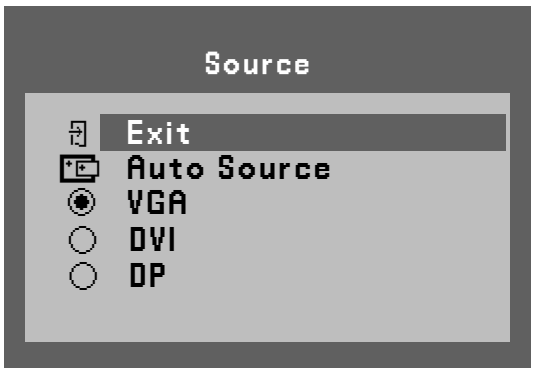

Image 6-4-9-4a Source OSD menu

- Auto Source: Select this function to search an input signal automatically.

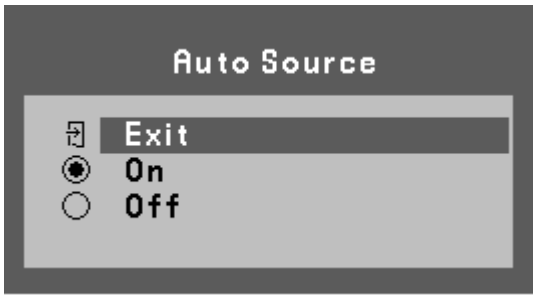

Image 6-4-9-4 Auto Source of the Source OSD menu

6.4.9.5 Power Key Lock

To lock the power key for accidental operation.

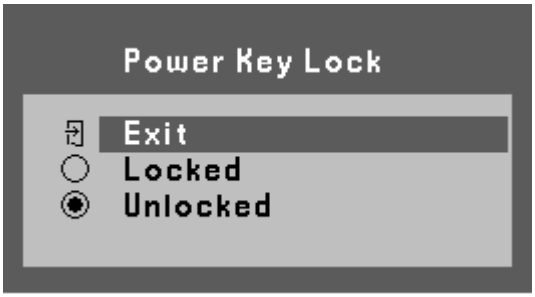

Image 6-4-9-5 Power Key Lock OSD menu

6.4.9.6 Recall

Reset OSD value to the default setting.

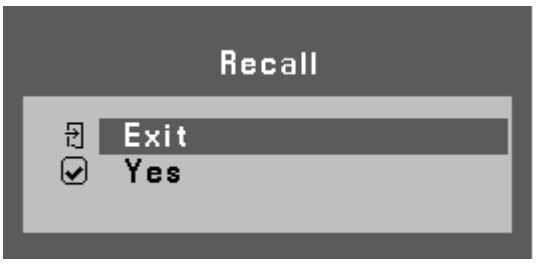

Image 6-4-9-6 Recall OSD menu

6.4.10 Operating Hours

Keep records of the monitor operating hours.



Image 6-4-10 Operation Hours OSD menu

6.5 Supported Video Modes

※Compliant Graphic Signal Timing (VGA, DVI, DP)

Resolution	Pixel-rate [MHz]	Line-rate [kHz]	Frame-rate [Hz]	VGA	DVI	DP
640x480	25.200	31.500	60.000	O	O	O
640x480	31.500	37.861	72.809	O		
640x480	31.500	37.500	75.000	O		
720x400	28.322	31.469	70.087	O	O	O
800x600	36.000	35.156	56.250	O		
800x600	40.000	37.879	60.317	O	O	O
800x600	50.000	48.077	72.188	O		
800x600	49.500	46.875	75.000	O		
1024x768	65.000	48.363	60.004	O	O	O
1024x768	75.000	56.476	70.069	O		
1024x768	78.750	60.023	75.029	O		
1280x1024	108.000	63.981	60.020	O	O	O
1280x1024	135.000	79.976	75.025	O		
1600x1200	162.000	75.000	60.000	O	O	O
1920x1080	148.504	67.502	60.002	◎	◎	◎
832x624	57.284	49.722	74.550	O	O	O

7. Technical specifications

Product description	27” LCD Touch Screen Monitor (ST - 27612 - TP)
Screen technology	AHVA
Active screen size (diagonal)	685.56 mm (27.0”)
Active screen size (H x V)	597.6 mm (H) x 336.15 mm (V)
Aspect ratio (H:V)	16:9
Resolution	FHD (1920 x 1080)
Pixel pitch	0.31125 mm (H) x 0.31125 mm (V)
Color support	16.7M colors (RGB 8-bit)
Viewing angle (H, V)	178 / 178 (CR=10)
Panel Brightness	300(Typ.),240(Min.) cd/m²
Response time	12 ms (Typ.)
Housing color	Front Bezel: White-N9 Rear Cover: White-N9 IO Cover: Grey-5817
Video input signals	1xDisplay Port 1xDVI 1xD-SUB 15 Pin (VGA) 1xPhone Jack 3.5mm
Power Rating	24 V dc, 1.4 A
Power Supply	Delta Electronics, Inc. Model MEA-065A24C Input: 100-240Vac, 1.5-0.75A, 50-60Hz Output: 24Vdc, 2.71A
Power consumption (maximum)	< 35 W
Power consumption (stand-by)	< 3 W
OSD languages	English, French, German, Italian, Spanish & Japanese.

Dimensions (W x H x D)	651 x 442 x 175 mm
Dimensions packed (W x H x D)	747 x 237 x 541 mm
Net Weight with stand	10.5kg ± 0.2 kg
Tilt Angle	-5 ±2 and 30 ±2 degrees
Mounting standard	VESA (100 x 100 mm)
Certifications	・ ANSI/AAMI ES60601-1: ;CAN/CSA-C22.2 No. 60601-1 ,Class I ・ FCC Part 15 subpart B ・ CE(EN 55032/EN 55035;EN 62368-1;WEEE;RoHS); IEC/EN 60601-1; EN60601-1-2;
Supplied accessories	User guide CD
Operating temperature	0°C to 40°C
Storage temperature	-20°C to 60°C
Operating humidity	30% - 75% (performance; non-condensing)
Storage humidity	10% - 90% (non-condensing)
Operation altitude	16,404 feet (3000m)
MTBF	30000 hrs
Ingress Protection	Front side: IP65 / Back side: IPx1
Intended User Profile	・ Age: Adult (specify range 21~70) ・ Gender: Can be use by all genders ・ Linguistic/ Cultural Background: At least English ・ Education/ Professional Competence: General level of education ・ Intended User Group: Hospital staff ・ Intended location: Medical environment ・ Knowledge Base: User should possess basic medical knowledge ・ Type of equipment: Portable (on a table)

8. Outline Dimension

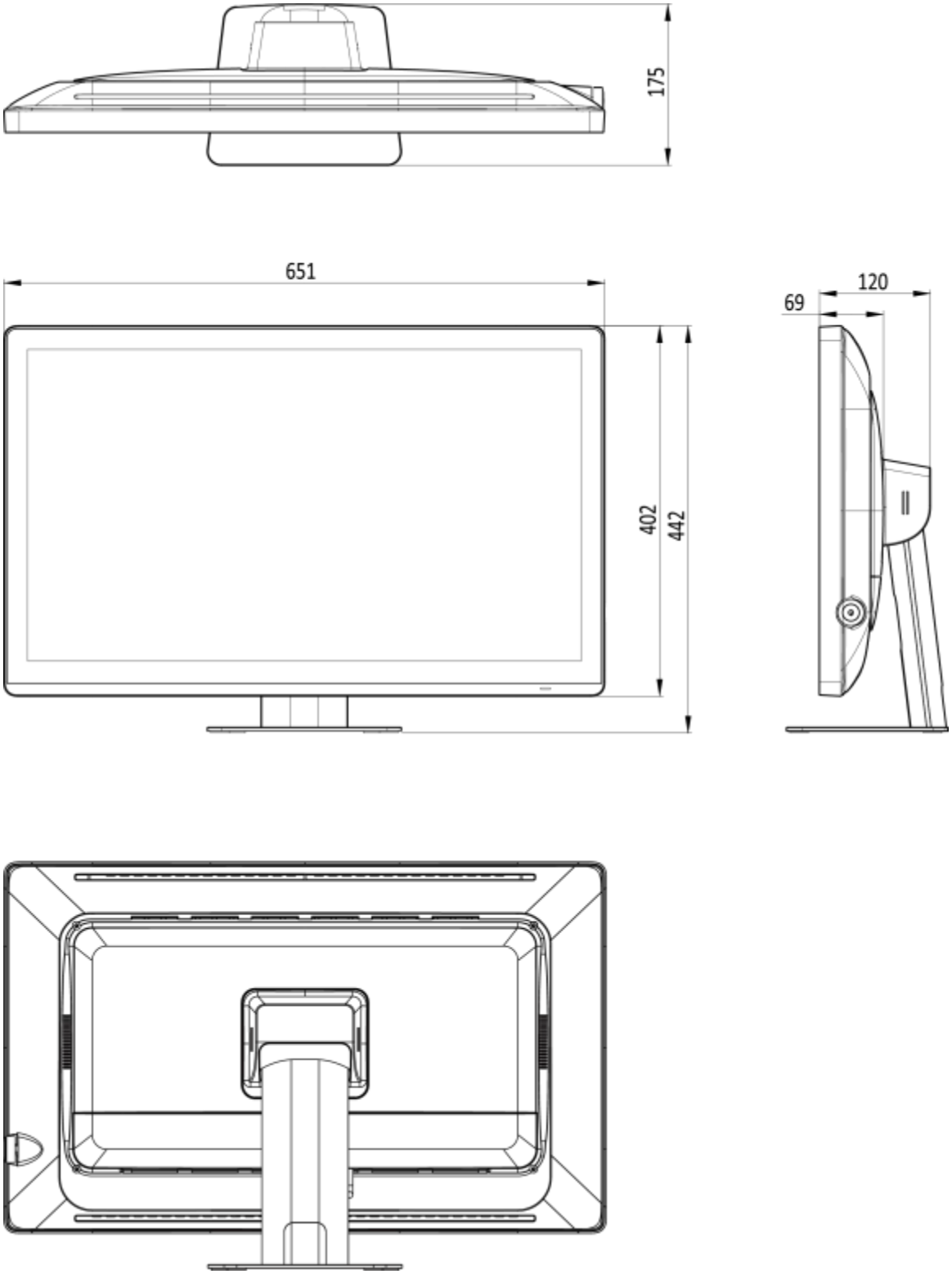

Image 8-1 Outline dimension

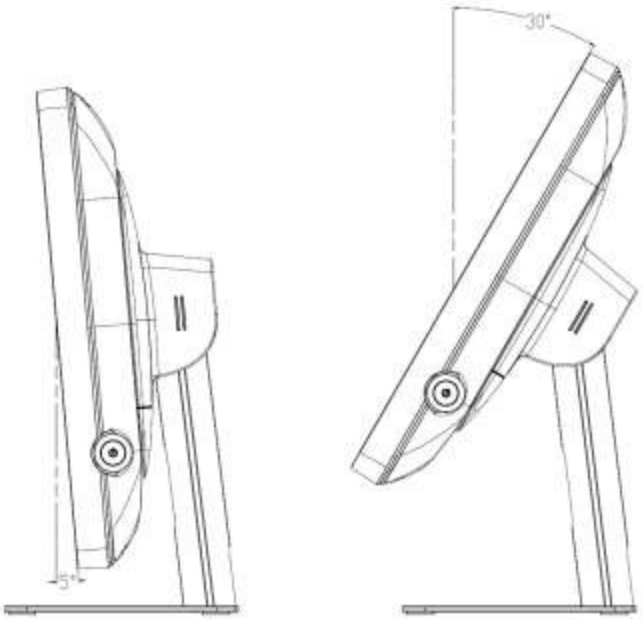

Image 8-2 Outline dimension with monitor tilt -5° & 30° backward

Optik View®

Optik View by the Linden Group Corp.

2B Wing Drive, Cedar Knolls, NJ 07927 Tel: 973-983-8809

Fax: 973-983-8803

https://www.optik v iew .com

Optik View®

Optik View ST - 27612 - TP

User Guide 202403

v2

醫學影像傳輸裝置(未滅菌)
用戶使用說明

ST-21512-TP
ST-21612-TP
ST-24512-TP
ST-24512-TP(YD)
ST-24612-TP
ST-24612-TP(YD)
ST-27512-TP
ST-27612-TP
RGP2461AMII-PW(AG)

1. 介紹

1.1 液晶專業顯示器說明

本設備適用於醫療保健，一般在醫院環境中被用於數據收集和顯示以供參考，裝置不執行進階圖像處理或複雜的定量功能，亦不包括單純醫學影像軟體之電子傳輸功能產品。

1.2 預期用途

醫療監視為提供顯示和查看數字圖像給訓練有素的醫生；是將醫學影像資料用電子傳輸於醫療器材之間的器材,本設備不用於診斷目的, 可以為醫學影像處理和操作提供簡單的影像查看功能，例如灰階等級調整、縮放和平移、使用者的幾何測量、壓縮或影像註釋,本品項裝置不執行進階圖像處理或複雜的定量功能。

1.3 禁忌症

本監測儀不用於直接診斷和介入放射治療，僅供參考。本產品的任何部分均不得與患者接觸。 切勿同時觸摸產品和患者不得與生命維持系統一起使用。該設備不適合在存在易燃麻醉劑與空氣、氧氣或一氧化二氮的混合物的情況下使用；產品亦不是 AP 或 APG 類別。該監視器不得用於數字乳房 X 光檢查和 MRI 醫療設備系統。

2. 顯示器安裝

⚠ 警告：安裝此設備需要足夠的專業知識；操作前必須測試所有設備和完整之設置。

2.1 產品概述

參考原廠說明” Product Overview”

2.2 安裝步驟

參考原廠說明”Monitor Installation”

2.3 OSD 選單操作

參考原廠說明”OSD Menu Operation”

2.4 OSD 選單操作性能規格

參考原廠說明”Technical Specifications ”

本產品提供電子化原廠說明書, 詳細操作說明, 請與鈺緯科技聯絡

3.安全資訊

3.1 一般建議:

操作設備前請閱讀安全和操作說明。 保存安全和操作說明以供將來參考。

遵守設備上和操作說明手冊中的所有警告。 請遵循所有操作和使用說明。

3.1 觸電或火災危險:

為防止觸電或火災危險，請勿拆下蓋子。

內部沒有可維修的部件。 請有資格的人員進行維修。 請勿讓本設備遭受雨淋或受潮。

3.3 對顯示器的修改：

未經製造商授權，請勿改裝本設備。

3.4 安全程度（易燃麻醉混合物）：

設備不適合在存在空氣、氧氣或一氧化二氮的易燃麻醉混合物的情況下使用。

3.5 非病人護理設備:

主要用於醫療保健機構的設備。 它適用於不可接觸患者的情況（無應用部件）。

該設備不得與生命維持設備一起使用。

用戶不應同時觸摸設備及其信號輸入端口(SIP)/信號輸出端口(SOP)和患者。

3.6 關鍵任務應用:

我們強烈建議在關鍵任務應用中,須立即替換顯示器。

3.7 電源連接帶外部電源的設備:

該設備必須接地。

電源要求：設備必須由外部適配器供電。

該設備旨在連續運行。

3.8 人體工學:

將顯示器放置在距離眼睛不超過 40 公分且不超過 70 公分的位置。 最佳距離為 50 公分。

使用預設的顏色設置。 不要在深色背景上使用藍色原色，因為它很難看清，並且可能因對比度不足而產生眼睛疲勞。

調整顯示器高度，使屏幕頂部處於或略低於視線水平。 當觀看屏幕中間時，你的眼睛應該稍微向下看。

3.9 電源線:

請勿使牆上插座和延長線過載，否則可能會導致火災或觸電。

主引線保護：電源線的佈線應確保電源線不會被踩到或被放置在其上或靠在其上的物品擠壓。 特別注意插頭和插座上的電線。

電源線始終只能由指定操作員更換。

使用與電源插座電壓相匹配的電源線，該電源線應經過批准並符合您所在國家/地區的安全標準。

避免將顯示器放置在難以觸及或難以斷開電源線的地方。

對於配備NEMA 配置非鎖定插頭類型120V/15A、125V/15A、250V/20A、最大長度3 m 的 ME 設備，應提供“醫院級”電源插頭，並標記電源線。

3.10 接地可靠性:

只有當設備連接到等效插座時才能實現接地可靠性。

3.11 液體和水分:

切勿將顯示器暴露在液體或濕氣中。

切勿在靠近水的地方使用顯示器 - 例如 靠近浴缸、洗臉盆、游泳池、廚房水槽、洗衣盆或潮濕的地下室。

3.12 通風:

請勿覆蓋或堵塞設備蓋子上的任何通風口。 將設備安裝在櫥櫃或其他封閉位置時，請注意設備與櫥櫃側面之間的必要空間。

3.13 安裝:

將設備放置在平坦、堅固且穩定的表面上，該表面可支撐至少 3 台設備的重量。 如果使用不穩定的推車或支架，設備可能會掉落，從而對兒童或成人造成嚴重傷害，並對設備造成嚴重損壞。

連接到模擬和數字接口的附件設備必須符合各自國家統一的 IEC 標準（即醫療設備的 IEC 60601-1）。此外，所有配置均應符合 IEC 60601-1 中的系統標準。 將附加設備連接到信號輸入部分或信號輸出部分的任何人都在配置醫療系統，因此有責任使系統符合系統標準 IEC 60601-1 的要求。 該裝置專用於與患者環境中經 IEC 60601-1 認證的設備以及患者環境外經 IEC 60XXX 認證的設備互連。以及本設備符合IEC 60601-1-2標準,為盡量減少其他設備干擾,應與其他設潛在電磁源如手機保持50公分以上距離, 使用的外部電纜需產品附帶或指定用電纜,以降低操作不當或減少電磁干擾.

預期使用者資料	· 年齡： 成人（指定範圍21~70歲） · 性別： 男女皆可使用 · 語言/文化背景：至少能用英語 · 教育/專業能力： 普通教育水平 · 目標用戶群： 醫院工作人員 · 擬建地點： 醫療環境 · 知識庫：使用者應具備基本的醫學知識 · 設備類型： 可攜帶式（置於桌面上） · 運轉模式： 連續運轉 · 設備零件： 無應用零件 · 產品壽命： 5 年

衛部醫器製壹字第007616號
中文品名:”歐德威”醫學影像傳輸裝置(未滅菌)
英文品名:”Optik View” Medical image communication device(Non-Sterile)
醫療器材商:鈺緯科技開發股份有限公司
醫療器材商住址: 新北市中和區中山路二段351號9樓
製造廠: 鈺緯科技開發股份有限公司中和二廠
製造廠地址:新北市中和區中山路二段351號9樓,351號9樓之8,351號9樓之13