RoHS | GP | HF

REV.	ECR/N NO.	DESCRIPTION	DRAWN	DATE
A	/	NEW	MINGKANG.CHENG	2022/02/21

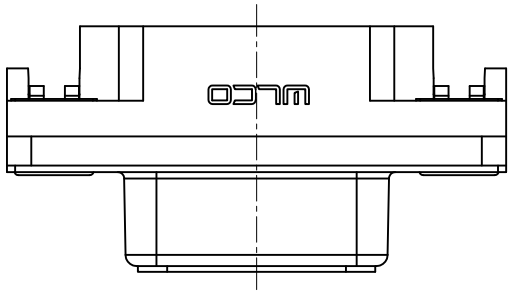

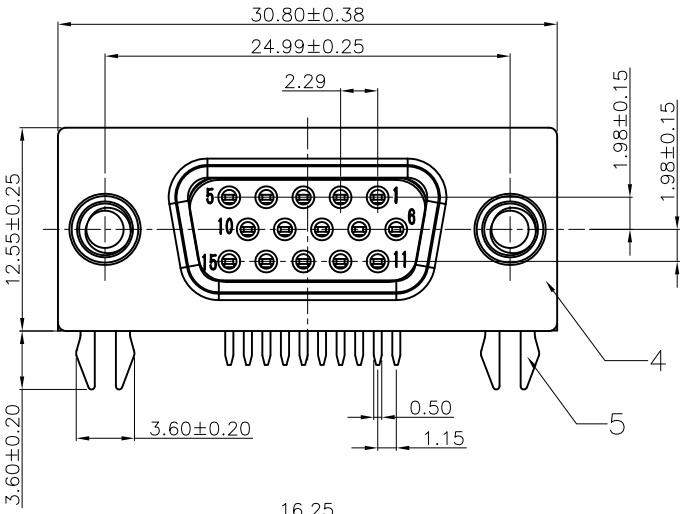

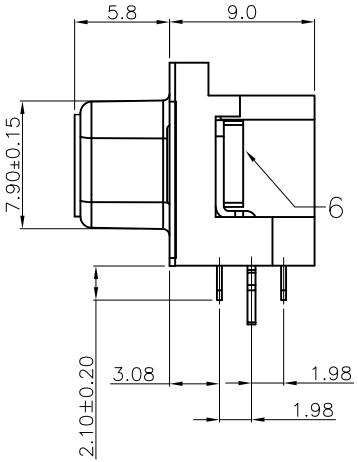

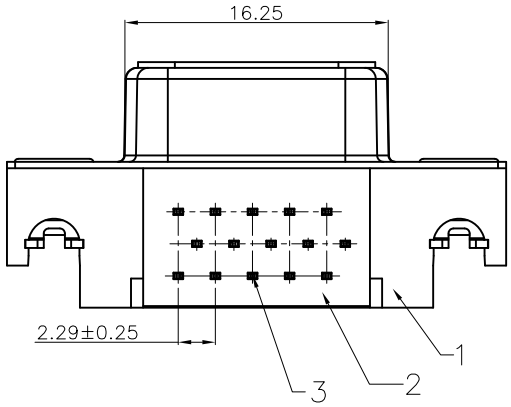

NOTES:
1.MATERIAL:
- 1.1 HOUSING: PBT UL94 V-0, COLOUR: BLUE;
- 1.2 COVER: PBT COLOUR:BLUE;
- 1.3 CONTACT: COPPER ALLOY;
- 1.4 SHELL: SPCC;
- 1.5 BOARDLOCK: SPCC;
- 1.6 RIVET:COPPER ALLOY;

2.PLATING:
- 2.1 CONTACT: AU/NI/SN;
- 2.2 SHELL: CU/NI;
- 2.3 BOARDLOCK:CU/NI/SN;
- 2.4 RIVET: NI;

3.SPECIFICATION:
- 3.1 CONTACT CURRENT RATING: 3 AMPS
- 3.2 CONTACT RESISTANCE: 30m OHM MAX
- 3.2 INSULATION RESISTANCE:1000M OHM MIN. AT 500V DC
- 3.3 DIELECTRIC WITHSTANDING VOLT:AC 500V(R.M.S)/1 MINUTE
- 3.4 INSERTION FORCE: 5.0KGF MAX
- 3.5 WITHDRAWAL FORCE: 1.5KGF MIN
- 3.6 DURABILITY: 1000 CYCLES

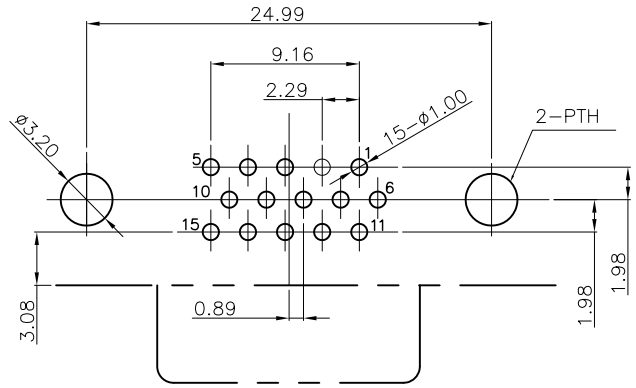

RECOMMENDED P.C.B LAYOUT(COMONENT SIDE)

THICKNESS:1.6mm(TOP VIEW))DEFAULT TOLERANCE ±0.05

TOLERANCE X.X ±0.35 X.XX ±0.25 X.XXX ±0.10 ANGLE ±2.0°	MODEL NAME: HDR 15母3.08铆合 PBT蓝胶RoHS环保 SPCC外壳 端子音叉式半金GOLD FLASH 针长2.10 SS鱼叉 吸塑包装			DRAWN: MINGKANG.CHENG
	MODEL NO: WLHD-345E			CHECKED: XIAOTAO.WU
	UNIT: mm	SCALE: 1:1	REVISION: A	SHEET 1/1	APPROVED: HUAMING.WU
	WLCO 深圳市兴万联电子有限公司 SHENZHEN XING WAN LIAN ELECTRONICS CO.,LTD.			DATE: 2022/02/21
				DWG NO: C-WLHD-345E
				FILE: C

RoHS GP HF

REV.	ECR/N NO.	DESCRIPTION	DRAWN	DATE
A	/	NEW	MINGKANG.CHENG	2022/02/21

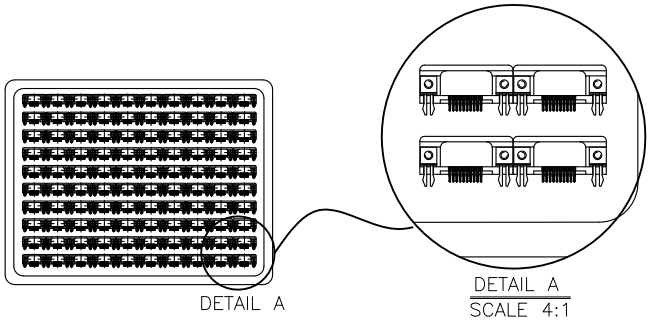

1.产品按图示方向放置，
100PCS/盘;

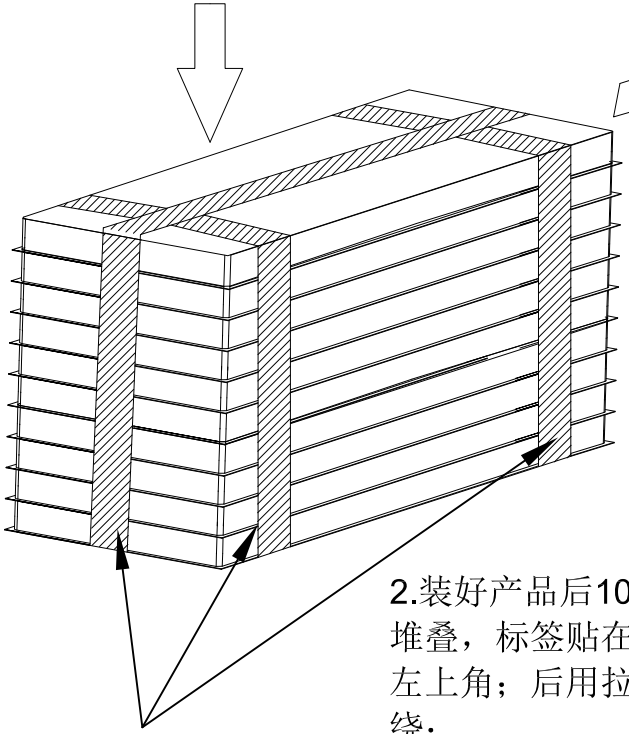

拉伸膜

2.装好产品后10盘按相同方向堆叠，标签贴在最上层吸塑盒左上角；后用拉伸膜工字形缠绕;

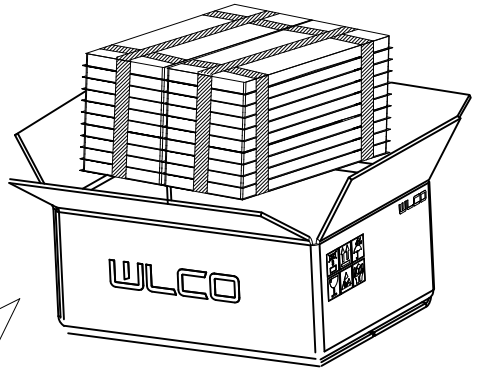

3.将缠好的产品放入纸箱中；共2000PCS/箱

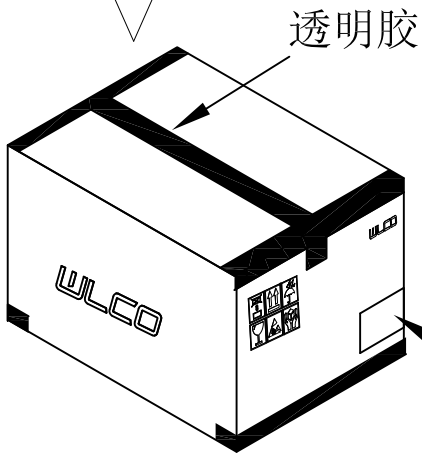

4.确认数量OK后用透明胶工字形封好纸箱，并贴上标签；

TOLERANCE	MODEL NAME: HDR 15每3.08脚合 PBT蓝胶RoHS环保 SPCC外壳 端子音叉式 半金GOLD FLASH 针长2.10 SS鱼叉 吸塑包装				DRAWN: MINGKANG.CHENG
X.X ±0.35 X.XX ±0.25 X.XXX ±0.15 ANGLE ±1.0°	MODEL NO: WLHD-345E				CHECKED: XIAOTAO.WU
	UNIT:	SCALE:	REVISION:	SHEET	APPROVED: HUAMING.WU
	mm	1:1	A	1/1	DATE: 2021/02/21
	WLCO 深圳市兴万联电子有限公司 SHENZHEN XING WAN LIAN ELECTRONICS CO.,LTD.				DWG NO: P-WLHD-345E
					FILE: P