APPROVAL SHEET

品保部
110.07.07
發行
鈺緯科技開發股份有限公司

WF25Q/R, WF20Q/R, WF10Q/R, WF12Q/R, WF08Q/R, WF06Q/R, WF04Q/R, WF02Q/R.

±1%, ±0.5%, ±0.25%, ±0.1%, ±0.05%, ±0.02%, ±0.01%

TC50 , TC25

High Precision Power Thin Film Chip Resistors

Size: 2512, 2010, 1210, 1206, 0805, 0603, 0402, 0201

華新科技股份有限公司
PSA
PASSIVE SYSTEM ALLIANCE
Walsin Technology Corporation
COPYRIGHT © WALSIN TECHNOLOGY CORPORATION. ALL RIGHTS RESERVED.

RoHS COMPLIANT

Pb-Free

*Contents in this sheet are subject to change without prior notice.

Copyright © by Walsin Technology Corporation. | All rights reserved.

FEATURE

1. SMD metal film resistor
2. High reliability and stability of 0.5% and below per customer request
3. High performance of TCR: 50 &25 ppm/°C and below per customer request
4. Low current noise
5. RoHS compliant and lead free

APPLICATION

- Medical equipment
- Measuring instrument
- Communication device
- Computer
- Printer

DESCRIPTION

The resistors are constructed in a high grade ceramic body (aluminum oxide). Internal metal electrodes are added at each end and connected by a resistive layer that is applied to the top surface of the substrate. The composition of the resistive layer is adjusted to give the approximate resistance required and the value is trimmed to nominated value within tolerance which controlled by laser trimming of this resistive layer.

The resistive layer is covered with a protective coat. Finally, the two external end terminations are added. For environmental soldering issue, the outer layer of these end terminations is a Lead-free solder .

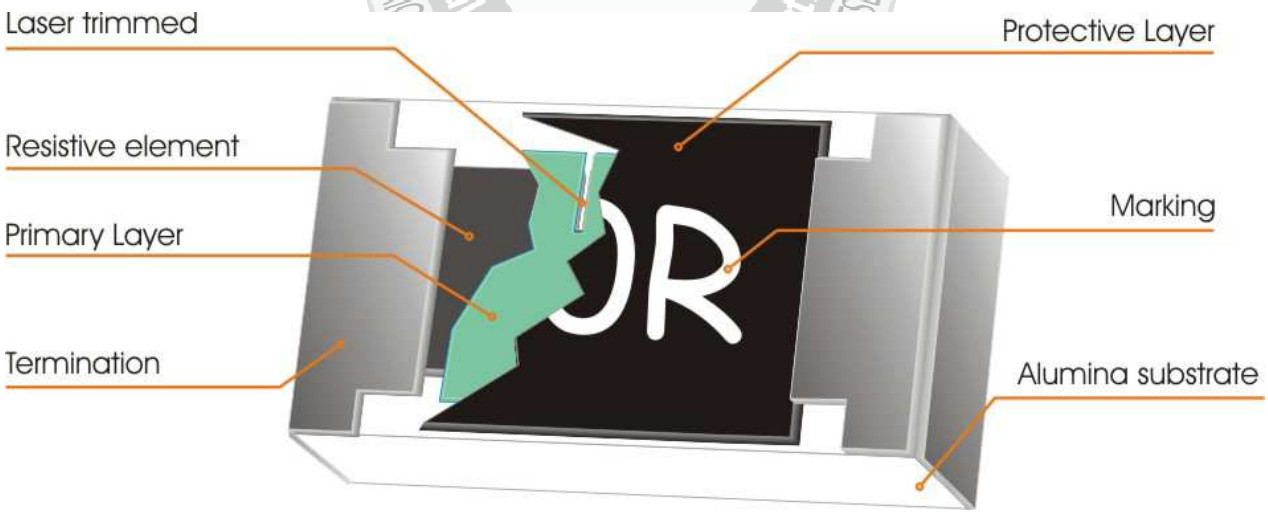

Fig 1. Construction of Chip-R WFxxQ/R

Copyright © by Walsin Technology Corporation. | All rights reserved.

QUICK REFERENCE DATA

Item	General Specification								
Series No.	WF25Q &R	WF20Q &R	WF10Q &R	WF12Q &R	WF08Q &R	WF06Q &R	WF04Q &R	WF02Q&R	
Size Code	2512 (6432)	2010 (5025)	1210 (3225)	1206 (3216)	0805 (2012)	0603 (1608)	0402 (1005)	0201 (0603)	
Resistance Tolerance	±1.0%, ±0.5%, ±0.25%, ±0.1%, ±0.05%, ±0.02%,±0.01%							± 1.0% ± 0.5%	
Resistance Range	1Ω ~ 3MΩ	4.7Ω ~ 3MΩ	4.7Ω ~ 2.5MΩ	1Ω ~ 2.5MΩ	4.7Ω ~ 2MΩ	3.9Ω ~ 1MΩ	10Ω ~ 255KΩ	27~ 22.1KΩ	27~ 12KΩ
TCR	± 50 / 25 ppm/°C							±50	±25
Max. Dissipation at T_{amb}=70°C	1W	3/4W	2/5W	1/4W	1/8W	1/10W	1/10W	1/20W	
Max. Operating Voltage	200V	200V	200V	200V	150V	75V	50V	15V	
Max. Overload Voltage	400V	400V	400V	400V	300V	150V	100V	30V	
Operating Temperature	- 55~ +155°C								

Note:

1. This is the maximum voltage that may be continuously supplied to the resistor element, see “IEC publication 60115-8”

2. Max. Operation Voltage : So called RCWV (Rated Continuous Working Voltage) is determined by

$$RCWV = \sqrt{Rated\,Power \times Resistance\,Value}$$ or Max. RCWV listed above, whichever is lower.

DIMENSIONS :(unit: mm)

Type	WF25	WF20	WF10	WF12	WF08	WF06	WF04	WF02
L	6.35 ± 0.10	5.00 ± 0.10	3.10 ± 0.10	3.05 ± 0.15	2.00 ± 0.10	1.55 ± 0.10	1.00 ± 0.10	0.60 ± 0.03
W	3.20 ± 0.15	2.50 ± 0.15	2.60 ± 0.15	1.55 ± 0.15	1.25 ± 0.10	0.80 ± 0.10	0.50 ± 0.05	0.30 ± 0.03
A	0.60 ± 0.20	0.60 ± 0.20	0.50 ± 0.20	0.40 ± 0.20	0.25 ± 0.20	0.30 ± 0.15	0.30 ± 0.15	0.10 ± 0.05
B	0.90 ± 0.25	0.60 ± 0.25	0.50 ± 0.20	0.40 ± 0.20	0.40 ± 0.20	0.30 ± 0.15	0.30 ± 0.15	0.15 ± 0.05
t	0.55 ± 0.10	0.55 ± 0.10	0.55 ± 0.10	0.55 ± 0.15	0.50 ± 0.15	0.45 ± 0.15	0.35 ± 0.05	0.23 ± 0.03

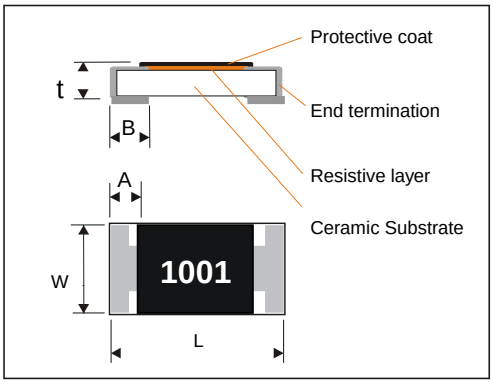

Copyright © by Walsin Technology Corporation. | All rights reserved.

MARKING

- ***3-digits marking for 0603 size***

WFxxQ/R has same marking rule as WRxx ±1%.

Nominal resistance	Description
1.E-24 series	As *0603 WR06X* ±5%.
2.E-96 series	The 1st two digit codes are referring to the CODE on the table, the 3rd code is the index of resistance value : $Y=10^{-2}$, $X=10^{-1}$, $A=10^{0}$, $B=10^{1}$, $C=10^{2}$, $D=10^{3}$, $E=10^{4}$, $F=10^{5}$ EX : 17.8Ω=25X , 178Ω=25A , 1K78 =25B 17K8=25C , 178K=25D , 1M78=25E
3. Remark	There is no marking for the items are not under E-24 and E-96 series

CODE	R_value	CODE	R_value	CODE	R_Value	CODE	R_value	CODE	R_value	CODE	R_value	CODE	R_value	CODE	R_value
01	**100**	13	**133**	25	**178**	37	**237**	49	**316**	61	**422**	73	**562**	85	**750**
02	**102**	14	**137**	26	**182**	38	**243**	50	**324**	62	**432**	74	**576**	86	**768**
03	**105**	15	**140**	27	**187**	39	**249**	51	**332**	63	**442**	75	**590**	87	**787**
04	**107**	16	**143**	28	**191**	40	**255**	52	**340**	64	**453**	76	**604**	88	**806**
05	**110**	17	**147**	29	**196**	41	**261**	53	**348**	65	**464**	77	**619**	89	**825**
06	**113**	18	**150**	30	**200**	42	**267**	54	**357**	66	**475**	78	**634**	90	**845**
07	**115**	19	**154**	31	**205**	43	**274**	55	**365**	67	**487**	79	**649**	91	**866**
08	**118**	20	**158**	32	**210**	44	**280**	56	**374**	68	**499**	80	**665**	92	**887**
09	**121**	21	**162**	33	**215**	45	**287**	57	**383**	69	**511**	81	**681**	93	**909**
10	**124**	22	**165**	34	**221**	46	**294**	58	**392**	70	**523**	82	**698**	94	**931**
11	**127**	23	**169**	35	**226**	47	**301**	59	**402**	71	**536**	83	**715**	95	**953**
12	**130**	24	**174**	36	**232**	48	**309**	60	**412**	72	**549**	84	**732**	96	**976**

- ***4-digits marking for 2512, 2010, 1210, 1206, 0805 size***

For E24+E96, each resistor is marked with a four digits code on the protective coating to designate the nominal resistance value. For values below 97Ω6 the R is used as a digit. For values of 100Ω or greater, the first 3 digits are significant, the fourth digit indicates the number of multiple to follow.

Example

RESISTANCE	100Ω	6800Ω	47000Ω
4-digits marking	1000	6801	4702

- ***No marking code for 0402 and 0201 size***

FUNCTIONAL DESCRIPTION

Product characterization

Standard values of nominal resistance are taken from the E192 & E24 series for resistors with a tolerance of ±1.0%, ±0.5%, ±0.25%, ±0.1%. The values of the E24/E192 series are in accordance with “IEC publication 60063”.

Copyright © by Walsin Technology Corporation. | All rights reserved.

DERATING

The power that the resistor can dissipate depends on the operating temperature; see Fig.2

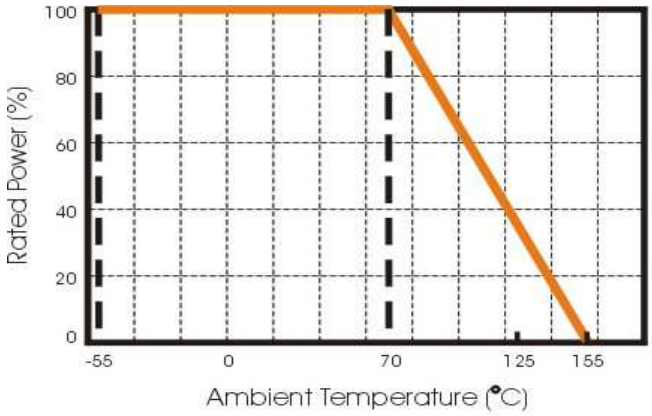

Fig.2 Maximum dissipation in percentage of rated power
As a function of the ambient temperature

MOUNTING

Due to their rectangular shapes and small tolerances, Surface Mountable Resistors are suitable for handling by automatic placement systems.

Chip placement can be on ceramic substrates and printed-circuit boards (PCBs).

Electrical connection to the circuit is by individual soldering condition.

The end terminations guarantee a reliable contact.

PSA
PASSIVE SYSTEM ALLIANCE
Walsin Technology Corporation
COPYRIGHT © WALSIN TECHNOLOGY CORPORATION. ALL RIGHTS RESERVED.

Copyright © by Walsin Technology Corporation. | All rights reserved.

SOLDERING CONDITION

The robust construction of chip resistors allows them to be completely immersed in a solder bath of 260°C for 10 seconds. Therefore, it is possible to mount Surface Mount Resistors on one side of a PCB and other discrete components on the reverse (mixed PCBs).

Surface Mount Resistors are tested for solderability at 235°C during 2 seconds within lead-free solder bath. The test condition for no leaching is 260°C for 30 seconds. Typical examples of soldering profile and condition that provide reliable joints without any damage are given in Fig 3. and Table 1.

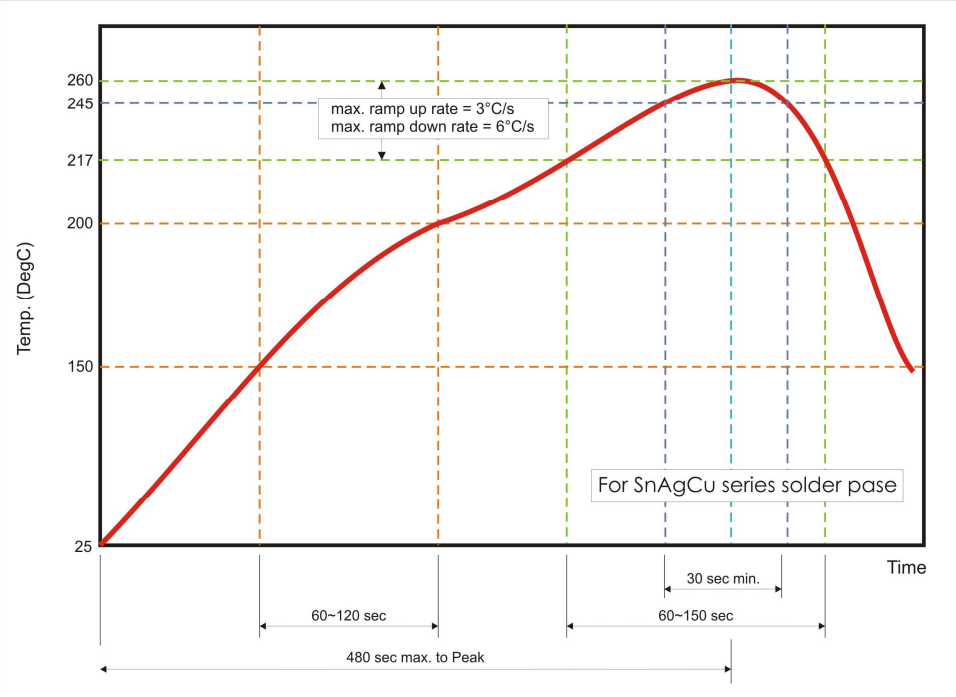

Fig. 3 Infrared soldering profile for Chip Resistors

Table 1. Infrared soldering condition for Chip Resistors

Temperature Condition	Exposure Time
Average ramp-up rate (217°C to 260°C)	Less than 3°C/second
Between 150 and 200°C	Between 60-120 seconds
> 217°C	Between 60-150 seconds
Peak Temperature	260ºC +0/-5°C
Time within 245°C	Min. 30 seconds
Ramp-down rate (Peak to 217°C)	Less than 6°C/second
Time from 25°C to Peak	No greater than 480 seconds

Copyright © by Walsin Technology Corporation. | All rights reserved.

CATALOGUE NUMBERS

The resistors have a catalogue number starting with.

WF06	Q/R	xxxx	B	T	L
Size code	**Type code**	**Resistance code**	**Tolerance**	**Packaging code**	**Termination code**
WF25: 2512	Q: TCR = 50 ppm	R is first code followed by	T : ±0.01%	T : 7" Taped & Reeled	L : lead free
WF20: 2010	R: TCR = 25 ppm	3 significant digits.	U: ±0.02%	A : 7" Reel 15k pcs	
WF10: 1210	High Power	100Ω =1000	A : ±0.05%		
WF12: 1206		37.4KΩ =3742	B : ±0.10%		
WF08: 0805			C : ±0.25%		
WF06: 0603			D : ±0.50%		
WF04: 0402			F : ±1.00%		
WF02: 0201					

1. Reeled tape packaging: 8mm width paper taping.
   5,000pcs/reel for WF10, WF12, WF08, WF06
   10,000pcs/reel for WF04
   15,000pcs/real for WF02
2. Reeled tape packaging: 12mm width paper taping
   4,000pcs/reel for WF25, WF20

華新科技股份有限公司 Walsin Technology Corporation COPYRIGHT © WALSIN TECHNOLOGY CORPORATION. ALL RIGHTS RESERVED.

Copyright © by Walsin Technology Corporation. | All rights reserved.

TEST AND REQUIREMENTS(JIS C 5201-1 : 1998)

TEST	PROCEDURE	REQUIREMENT
		Resistor
DC resistance **Clause 4.5**	DC resistance values measured	Within the specified tolerance
Temperature Coefficient of Resistance(T.C.R) **Clause 4.8**	Natural resistance change per change in degree centigrade. $\frac{R_2 - R_1}{R_1(t_2 - t_1)} \times 10^6$ (ppm/°C) R_1 : Resistance at reference temperature R_2 : Resistance at test temperature t_1 : 20℃+5℃-1℃ t2 : 125℃+5℃-1℃	Refer to " QUICK REFERENCE DATA "
Short time overload (S.T.O.L) **Clause 4.13**	Permanent resistance change after a 5second application of a voltage 2.5 times RCWV or the maximum overload voltage specified in the above list, whichever is less.	ΔR/R max. ±(0.2%+0.05Ω)
Resistance to soldering heat(R.S.H) **IEC 60068-2- 58:2004**	Un-mounted chips completely immersed for 10±1second in a SAC solder bath at 260℃±5°C	no visible damage Δ R/R max. ±(0.25%+0.05Ω)
Solderability **IEC 60068-2- 58:2004**	Un-mounted chips completely immersed for 2±0.5 second in a SAC solder bath at 235℃±5℃	good tinning (>95% covered) no visible damage
Temperature cycling **Clause 4.19**	30 minutes at -55°C±3°C, 2~3 minutes at 20℃+5℃-1℃, 30 minutes at +155°C±3°C, 2~3 minutes at 20℃+5℃-1℃, total 5 continuous cycles	no visible damage ΔR/R max. ±(0.5%+0.05Ω)
Load Life (Endurance) **Clause 4.25**	70±2°C, 1000 hours, loaded with RCWV or Vmax,1.5 hours on and 0.5 hours off	ΔR/R max. ±(0.5%+0.05Ω)
Humidity **Clause 4.24**	1000 hours, at rated continuous working voltage in humidity chamber controller at 40°C±2°C and 90~95% relative humidity, 1.5hours on and 0.5 hours off	ΔR/R max. ±(0.5%+0.05Ω)
Bending strength **Clause 4.33**	Resistors mounted on a 90mm glass epoxy resin PCB(FR4); bending : 3 mm, once for 10 seconds.	ΔR/R max. ±(0.1%+0.05Ω)
Adhesion **Clause 4.32**	Pressurizing force: 5N, Test time: 10±1sec.	No remarkable damage or removal of the terminations.

Copyright © by Walsin Technology Corporation. | All rights reserved.

PACKAGING

Paper Tape specifications (unit :mm)

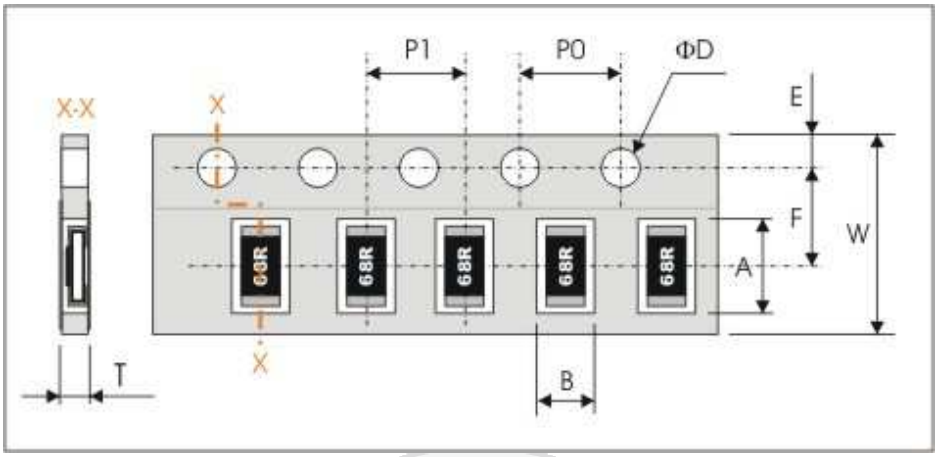

Series No.	Tape	A	B	W	F	E
WF25	Plastic	6.90±0.20	3.60±0.20	12.00±0.30	5.50±0.10	1.75±0.10
WF20	Plastic	5.50±0.20	2.80±0.20	12.00±0.30	5.50±0.10	1.75±0.10
WF10	Paper	3.60±0.20	3.00±0.20	8.00±0.30	3.50±0.20	1.75±0.10
WF12	Paper	3.60±0.20	2.00±0.20	8.00±0.30	3.50±0.20	1.75±0.10
WF08	Paper	2.40±0.20	1.65±0.20	8.00±0.30	3.50±0.20	1.75±0.10
WF06	Paper	1.90±0.20	1.10±0.20	8.00±0.30	3.50±0.20	1.75±0.10
WF04	Paper	1.20±0.10	0.70±0.10	8.00±0.30	3.50±0.05	1.75±0.10
WF02	Paper	0.67±0.05	0.37±0.05	8.00±0.30	3.50±0.05	1.75±0.10

Series No.	P1	P0	ΦD	T
WF25	4.00±0.10	4.00±0.10	$\Phi 1.50^{+0.1}_{-0.0}$	Max 1.2
WF20	4.00±0.10	4.00±0.10	$\Phi 1.50^{+0.1}_{-0.0}$	Max 1.2
WF10	4.00±0.10	4.00±0.10	$\Phi 1.50^{+0.1}_{-0.0}$	Max. 1.0
WF12	4.00±0.10	4.00±0.10	$\Phi 1.50^{+0.1}_{-0.0}$	Max. 1.0
WF08	4.00±0.10	4.00±0.10	$\Phi 1.50^{+0.1}_{-0.0}$	Max. 1.0
WF06	4.00±0.10	4.00±0.10	$\Phi 1.50^{+0.1}_{-0.0}$	0.65±0.05
WF04	2.00±0.10	4.00±0.10	$\Phi 1.50^{+0.1}_{-0.0}$	0.40±0.05
WF02	2.00±0.05	4.00±0.05	$\Phi 1.50^{+0.1}_{-0.0}$	0.45±0.05

Copyright © by Walsin Technology Corporation. | All rights reserved.

Reel dimensions

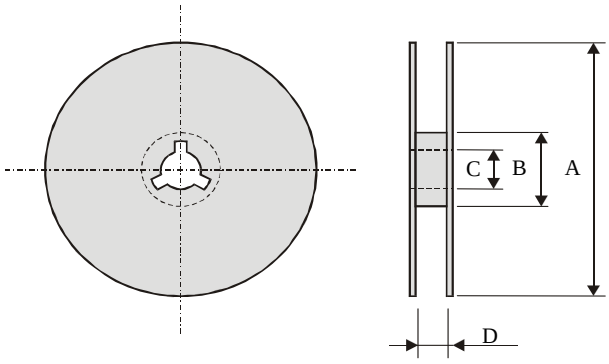

WF25 , WF20

Symbol	A	B	C	D
(unit : mm)	Φ178.0±2.0	Φ60.0±1.0	13.0±0.2	14.0±0.5

WF12 , WF10 , WF08 , WF06 , WF04

Symbol	A	B	C	D
(unit : mm)	Φ178.0±2.0	Φ60.0±1.0	13.0±0.2	9.0±0.5

WF02

Symbol	A	B	C	D
(unit : mm)	$\Phi 180^{+0.0}_{-1.5}$	$\Phi 60^{+0.0}_{-1.5}$	13.0±0.2	$\Phi 9^{+1.0}_{-0.0}$

Taping quantity

- Chip resistors 4,000 pcs per reel (WF25,WF20)
- Chip resistors 5,000 pcs per reel (WF10,WF12,WF08,WF06)
- Chip resistors 10,000 pcs per reel (WF04)
- Chip resistors 15.000 pcs per reel (WF02)

Copyright © by Walsin Technology Corporation. | All rights reserved.