(V) Preliminary Specification
() Final Specification

Module	**23.8" Color TFT-LCD**
Model Name	**Q238HAE00**
Suffix	**AK1**

Customer	**Date**	**Approved by**	**Date**
		Aaron Ho	May 13, 2024
Approved by		**Prepared by**	**Date**
		Poly PF Yu ***Tess Chen***	May 13, 2024
Revision **0**		Qisda corporation	

Contents

1 Handling Precautions 4
2 General Description 5
2.1 Display Characteristics 5
2.2 Absolute Maximum Rating of Environment 6
2.3 Optical Characteristics 7
3 TFT-LCD Module 10
3.1 Block Diagram 10
3.2 Interface Connection 11
3.2.1 Connector Type 11
3.2.2 Connector Pin Assignment 11
3.3 Electrical Characteristics 13
3.3.1 Absolute Maximum Rating 13
3.3.2 Recommended Operating Condition 13
3.4 Signal Characteristics 15
3.4.1 LCD Pixel Format 15
3.4.2 LVDS Data Format 15
3.4.3 Color versus Input Data 16
3.4.4 LVDS Specification 17
3.4.5 Input Timing Specification 19
3.4.6 Input Timing Diagram 20
3.4.7 I2C Electrical Characteristics 21
3.5 Power ON/OFF Sequence 22
4 Backlight Unit 23
4.1 Characteristic of LED bar 23
4.2 Interface Connection 23
4.2.1 Connector Type 23
4.2.2 Connector Pin Assignment 24
4.3 Electrical Characteristics 25
4.3.1 Recommended Operating Condition 25
5 Reliability Test 26
6 Shipping Label 27
7 Mechanical Characteristics 28
8 8 Design Guide for System 30

Record of Version

Version	Date	Page	Old description	New Description	Remark
0.01	2023/10/25	-		Frist Draft (Preliminary)	
0.02	2024/05/13	5			客戶要求同時提供250和300 nits規格
		7			客戶要求同時提供250和300 nits規格
		25			客戶要求同時提供250和300 nits規格

1 Handling Precautions

1) Since polarizer is easily damaged, do not touch or press the surface of polorizer with hand.
2) Be sure to turn off power supply when inserting or disconnecting from input connector.
3) Wipe off water drop immediately. Long contact with water may cause discoloration or spots.
4) When the panel surface is soiled, wipe it with absorbent cotton or other soft cloth.
5) Since the panel is made of glass, it may break or crack if dropped or bumped on hard surface.
6) Since CMOS LSI is used in this module, take care of static electricity and insure human earth when handling.
7) Do not open or modify the Module Assembly.
8) Do not press the reflector sheet at the back of the module to any directions.
9) In case a TFT-LCD Module has to be put back into the packing container slot after once it was taken out from the container, do not press the center of the LED lightbar edge. Otherwise the TFT-LCD Module may be damaged.
10) Insert or pull out the interface connector, be sure not to rotate nor tilt it of the TFT-LCD Module.
11) Do not twist nor bend the TFT -LCD Module even momentary. It should be taken into consideration that no bending/twisting forces are applied to the TFT-LCD Module from outside. Otherwise the TFT-LCD Module may be damaged.
12) Please avoid touching COF position while you are doing mechanical design.
13) When storing modules as spares for a long time, the following precaution is necessary: Store them in a dark place. Do not expose the module to sunlight or fluorescent light. Keep the temperature between 5℃ and 35℃ at normal humidity.
14) Do not apply the same pattern for a long time, it will enhance relevant defect.
15) When this reverse-type model(PCBA on bottom side) is used as forward-type model(PCBA on top side) , can not guarantee any defects of LCM .

2 General Description

This specification applies to the 23.8 inch wide Color a-Si TFT-LCD Module Q238HAE00. The display supports the Full HD - 1920(H) x 1080(V) screen format and 16.7M colors (RGB 6-bits+Hi_FRC). The input interface is Dual channel LVDS and this module doesn't contain an driver board for backlight.

2.1 Display Characteristics

The following items are characteristics summary on the table under 25°C condition:

ITEMS	Unit	SPECIFICATIONS
O/C Model	-	M238HAN03.6
Screen Diagonal	[mm]	23.8"
Active Area	[mm]	527.04(H) x 296.46(V)
Pixels H x V	-	1920(x3) x 1080
Pixel Pitch	[um]	274.5 (per one triad) ×274.5
Pixel Arrangement	-	R.G.B. Vertical Stripe. Source board at bottom ***Note 2-1***
Display Mode	-	AHVA Mode (Advanced Hyper-Viewing Angle) , Normally Black
White Luminance (Center)	[cd/m²]	250 (Typ.)
White Luminance (Center)	[cd/m²]	300 (Typ.)
Contrast Ratio	-	1300:1 (Typ.)
Response Time	[msec]	14 (Typ., GTG)
250 nits Power Consumption (LCD Module + Backlight unit)	[Watt]	13.97W (Typ.) LCD module : PDD (Typ.)=1.5 W @ White pattern,Fv=60Hz Backlight unit : P_{BLU} (Typ.) =12.47W @Is=75.5mA
300 nits Power Consumption (LCD Module + Backlight unit)	[Watt]	14.8W (Typ.) LCD module : PDD (Typ.)= 1.5 W @white pattern, Fv=60Hz Backlight unit : P_{BLU} (Typ.) = 13.3 W @I_S= 80.5 mA
Weight	[Grams]	1830(TBD)(Typ.)
Outline Dimension	[mm]	535.24(H)x313.47(V)x11.94(D)
Electrical Interface	-	Dual channel LVDS
Support Color	-	16.7M colors, 6-bits RGB+HiFRC data input
Surface Treatment	-	Anti-Glare, AG25
Temperature Range Operating Storage (Shipping)	[°C] [°C]	0 to +50 -20 to +60
RoHS Compliance	-	RoHS Compliance
TCO Compliance	-	TCO 9.0 Compliance

PS. The actual measured value of transmittance depends on the backlight of each SI

Note 2-1: The following shows the figure of pixel arrangement

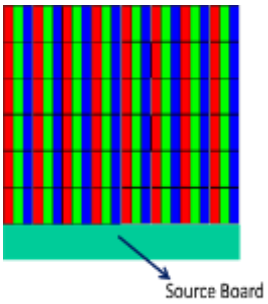

2.2 Absolute Maximum Rating of Environment

Permanent damage may occur if exceeding the following maximum rating.

Symbol	Description	Min.	Max.	Unit	Remark
TOP	Operating Temperature	0	+50	[°C]	***Note 2-2***
TGS	Glass surface temperature (operation)	0	+65	[°C]	***Note 2-2*** *Function judged only*
HOP	Operation Humidity	5	90	[%RH]	***Note 2-2***
TST	Storage Temperature	-20	+60	[°C]	
HST	Storage Humidity	5	90	[%RH]	

Note 2-2: Temperature and relative humidity range are shown as the below figure.

1. 90% RH Max (Ta ≦ 39°C)
2. Max wet-bulb temperature at 39°C or less. (Ta ≦ 39°C)
3. No condensation

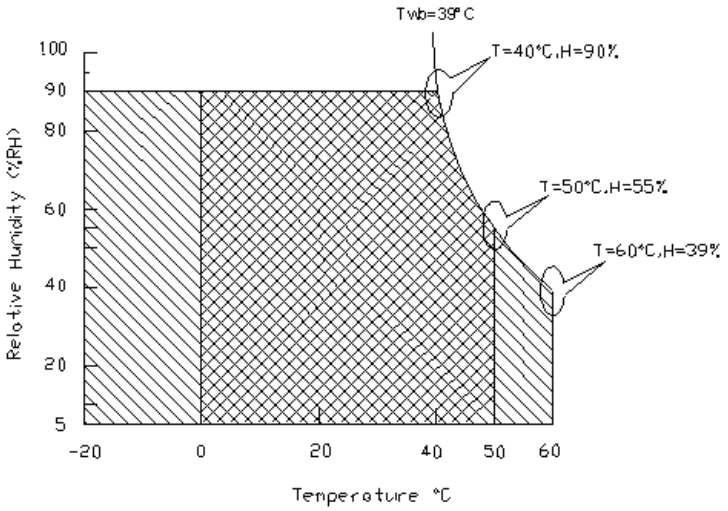

Operating Range Storage Range +

2.3 Optical Characteristics

The optical characteristics are measured on the following test condition.

Test Condition:

1. Equipment setup: Please refer to ***Note 2-3***.
2. Panel Lighting time: 30 minutes
3. VDD=5.0V, Fv=60Hz,Is=75.5mA,Ta=25°C

Symbol	Description		Min	Typ.	Max	Unit	Remark
L_w	250 nits White Luminance (Center of screen)		200	250	-	[cd/m2]	***Note 2-3***
	300 nits White Luminance (Center of screen)		240	300		[cd/m2]	Is = 80.5 mA
L_{uni}	Luminance Uniformity (9 points)		75	80	-	[%]	***Note 2-4***
CR	Contrast Ratio (Center of screen)		900	1300	-	-	***Note 2-5***
θ_R	Horizontal Viewing Angle (CR=10)	Right	85	89	-	[degree]	***Note 2-6*** *By SR-3*
θ_L		Left	85	89	-		
Φ_H	Vertical Viewing Angle (CR=10)	Up	85	89	-		
Φ_L		Down	85	89	-		
T_{GTG}	Response Time	Gray To Gray	-	14	25	[msec]	***Note 2-7*** *By TRD-100*
R_x	Color Coordinates (CIE 1931)	Red x	0.595	0.625	0.655		By SR-3
R_y		Red y	0.322	0.352	0.382		
G_x		Green x	0.280	0.310	0.340		
G_y		Green y	0.600	0.630	0.660		
B_x		Blue x	0.123	0.153	0.183		
B_y		Blue y	0.015	0.045	0.075		
W_x		White x	0.283	0.313	0.343		
W_y		White y	0.299	0.329	0.359		
NTSC area ratio				72		[%]	

Note 2-3: Equipment setup :

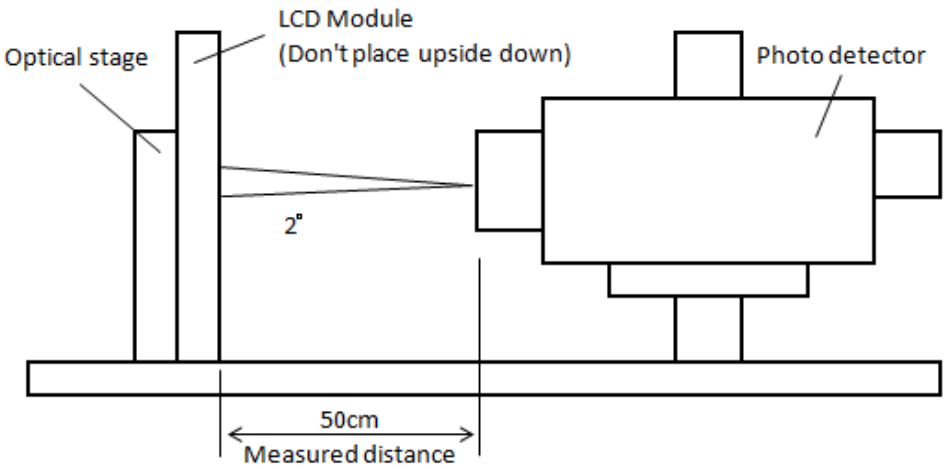

Note 2-4: Luminance Uniformity Measurement

Definition:

$$\text{Luminance Uniformity} = \frac{\text{Minimum Luminance of 9 Points (P1}\sim\text{P9)}}{\text{Maximum Luminance of 9 Points (P1}\sim\text{P9)}}$$

a.Test pattern:White Pattern

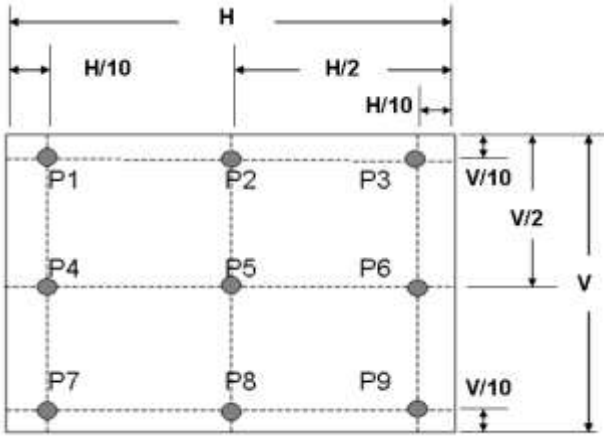

Note 2-5: Contrast Ratio Measurement

Definition:

$$\text{Contrast Ratio} = \frac{\text{Luminance of White pattern}}{\text{Luminance of Black pattern}}$$

a. Measured position: Center of screen (P5) & perpendicular to the screen (θ=Φ=0°)

Note 2-6: Viewing angle measurement

Definition: The angle at which the contrast ratio is greater than 10 & 5 .

a. Horizontal view angle: Divide to left & right (θ_L & θ_R)

Vertical view angle: Divide to up & down (Φ_H &Φ_L)

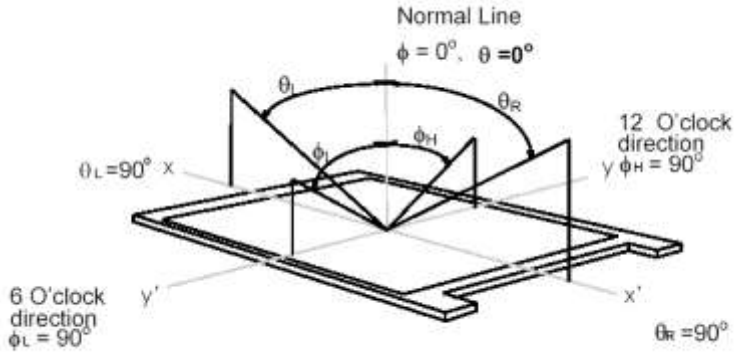

Note 2-7: Response time measurement

The output signals of photo detector are measured when the input signals are changed from "Gray level A" to "Gray level B" (falling time, TF), and from "Gray level B" to "Gray level A" (rising time, TR), respectively.

The response time is interval between the 10% and 90% of optical response.

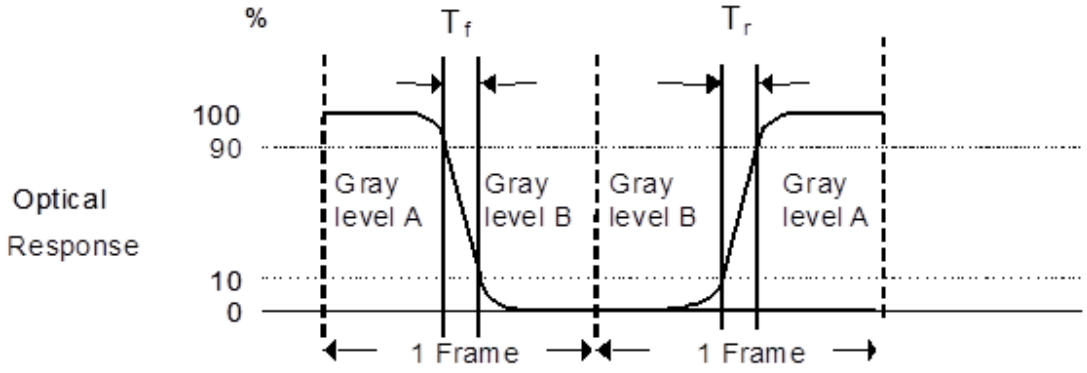

The gray to gray response time is defined as the following table.

Gray Level to Gray Level		Target gray level				
		L0	L63	L127	L191	L255
Start gray level	L0					
	L63					
	L127					
	L191					
	L255					

■ T_{GTG_typ} is the total average time at rising time and falling time of gray to gray.

3 TFT-LCD Module

3.1 Block Diagram

The following shows the block diagram of the 23.8 inch Color TFT-LCD Module.

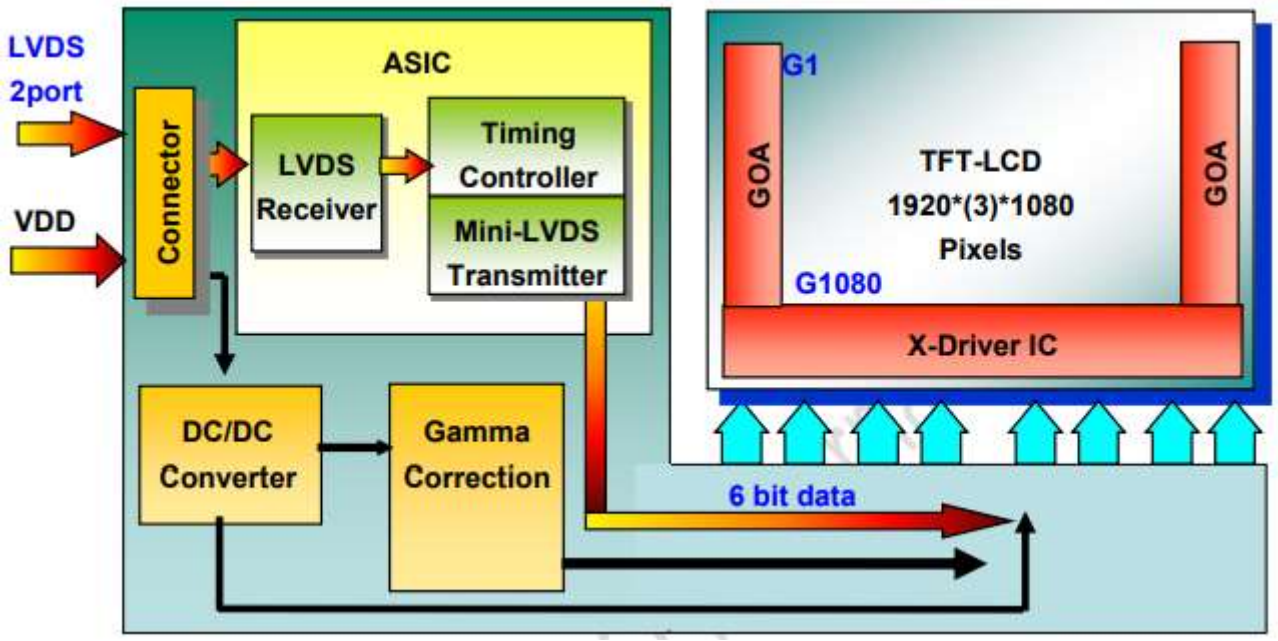

X PCB

3.2 Interface Connection

3.2.1 Connector Type

TFT-LCD Connector	Manufacturer	P-TWO	STM
	Part Number	187034-3009	MSBKT2407P30HB
Mating Connector	Manufacturer	JAE or Compatible	
	Part Number	FI-X30HL (Locked Type)	

3.2.2 Connector Pin Assignment

PIN #	Symbol	Description	Remark
1	RxO0-	Negative LVDS differential data input (Odd data)	
2	RxO0+	Positive LVDS differential data input (Odd data)	
3	RxO1-	Negative LVDS differential data input (Odd data)	
4	RxO1+	Positive LVDS differential data input (Odd data)	
5	RxO2-	Negative LVDS differential data input (Odd data)	
6	RxO2+	Positive LVDS differential data input (Odd data)	
7	GND	Ground	
8	RxOCLK-	Negative LVDS differential clock input (Odd clock)	
9	RxOCLK+	Positive LVDS differential clock input (Odd clock)	
10	RxO3-	Negative LVDS differential data input (Odd data)	
11	RxO3+	Positive LVDS differential data input (Odd data)	
12	RxE0-	Negative LVDS differential data input (Even data)	
13	RxE0+	Positive LVDS differential data input (Even data)	
14	GND	Ground	
15	RxE1-	Negative LVDS differential data input (Even data)	
16	RxE1+	Positive LVDS differential data input (Even data)	
17	GND	Ground	
18	RxE2-	Negative LVDS differential data input (Even data)	
19	RxE2+	Positive LVDS differential data input (Even data)	
20	RxECLK-	Negative LVDS differential clock input (Even clock)	
21	RxECLK+	Positive LVDS differential clock input (Even clock)	
22	RxE3-	Negative LVDS differential data input (Even data)	
23	RxE3+	Positive LVDS differential data input (Even data)	
24	WP	Digital-Vcom write protection	
25	NC	No connection (for AUO test only. Do not connect)	
26	SCL	12C-Compatible Serial-Clock Input for Vcom adjust	
27	SDA	12C-Compatible Serial-Data Input / Output for Vcom adjust	
28	VDD	Power +5V	

29	VDD	Power +5V	
30	VDD	Power +5V	

Connector PIN drawing

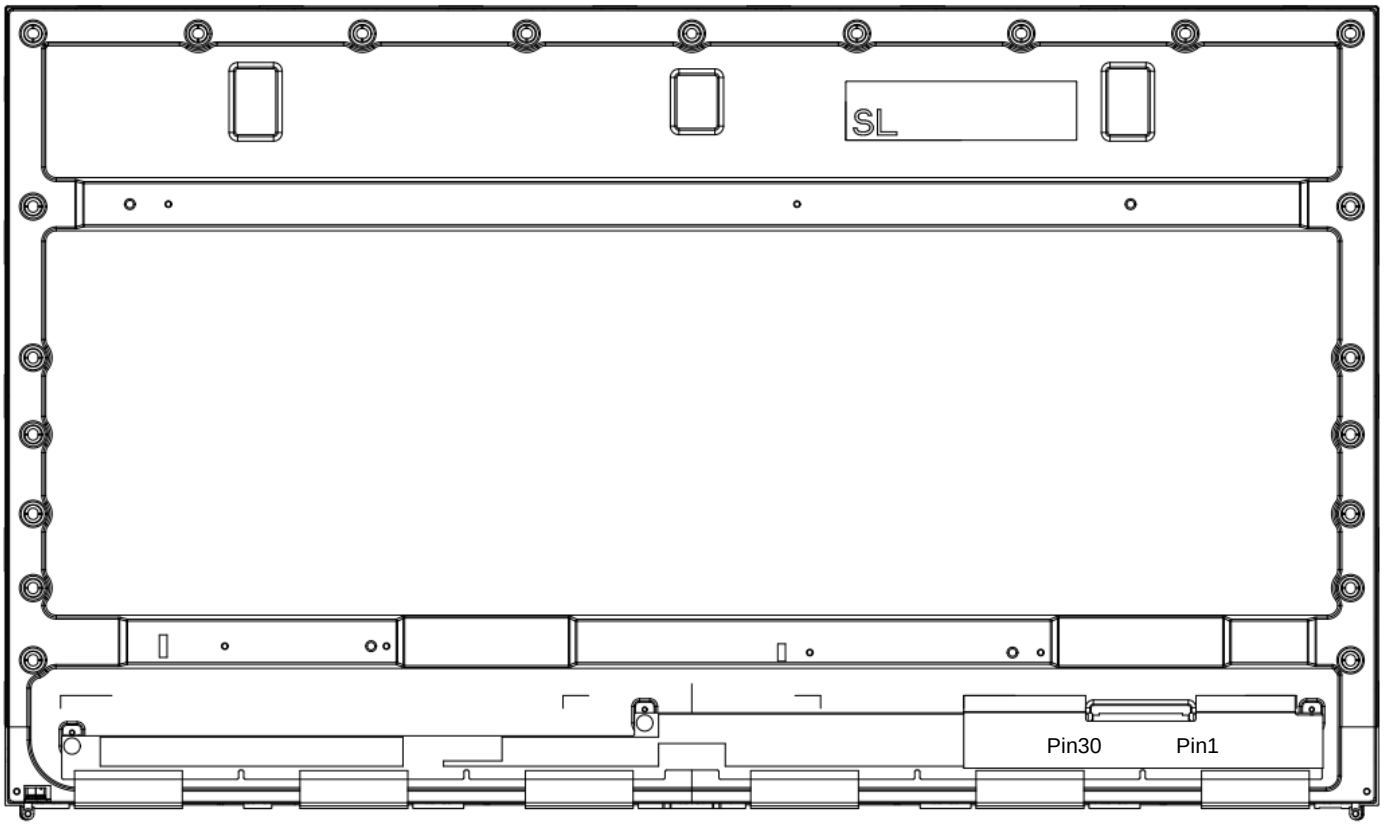

3.3 Electrical Characteristics

3.3.1 Absolute Maximum Rating

Permanent damage may occur if exceeding the following maximum rating.

Symbol	Description	Min	Max	Unit	Remark
VDD	Power Supply Input Voltage	GND-0.3	6.0	[Volt]	Ta=25℃
SCL, SDA,WP	I2C input Voltage	GND-0.3	4.0	[Volt]	Ta=25℃

3.3.2 Recommended Operating Condition

Symbol	Item		Min.	Typ.	Max.	Unit	Note
VDD	Power Supply Input Range		4.5	5.0	5.5	[Volt]	
IDD	Current of Power Supply@60Hz	White	-	0.3	0.36	[A]	Note3-1
		Black	-	0.3	0.36	[A]	
		H-stripe	-	0.8	0.96	[A]	
	Current of Power Supply@100Hz	White	-	0.4	0.48	[A]	
		Black	-	0.4	0.48	[A]	
		H-stripe	-	1.2	1.44	[A]	
PDD	VDD Power Consumption@60Hz		-	1.5	1.8	[Watt]	White
	VDD Power Consumption@100Hz		-	6	7.2	[Watt]	H-stripe
IRUSH	Inrush current		-	-	3	[A]	Note3-2
VDDrp	Allowable VDD Ripple Voltage				500	[mV]	VDD=5.0V, White Pattern @Maxi Frame rate

Note 3-1: Test Condition:

(1) V_{DD} = Typical, (2) Temperature = 25 ℃

(3) Power dissipation check pattern. (Only for power design)

(4) H-stripe is the max power pattern.

A. White



B. Black



C. H-Stripe

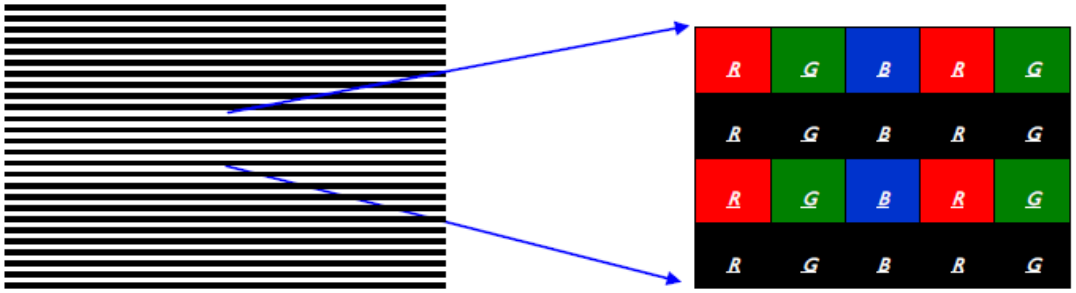

Note 3-2: Inrush Current measurement:

Test circuit:

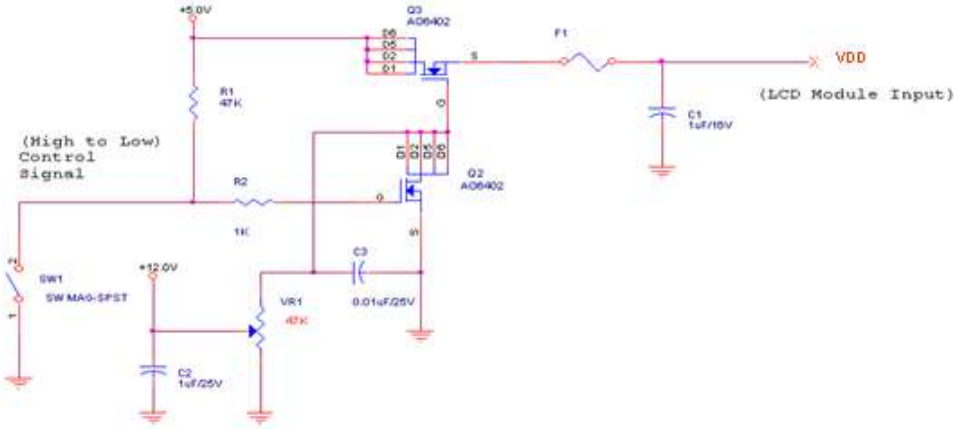

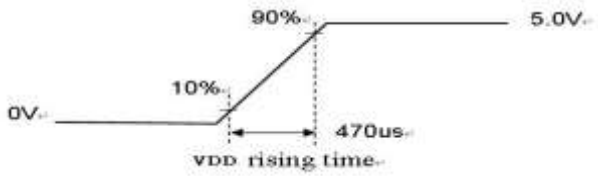

The duration of VDD rising time: 470us.

3.4 Signal Characteristics

3.4.1 LCD Pixel Format

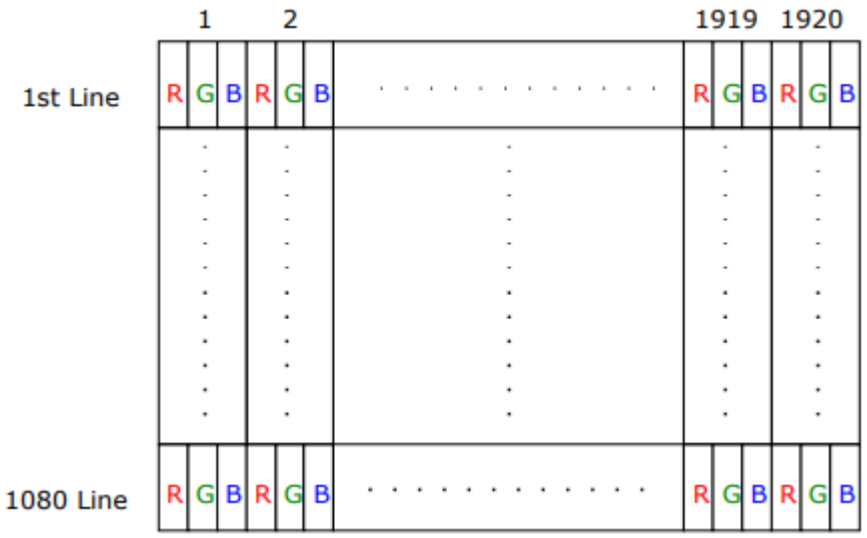

3.4.2 LVDS Data Format

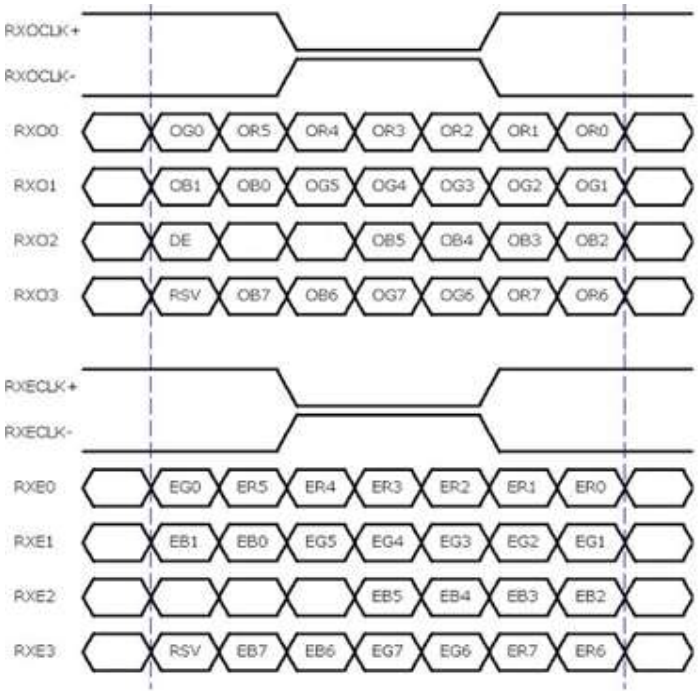

8 Bit Color Bit Order			
MSB	R7	G7	B7
	R6	G6	B6
	R5	G5	B5
	R4	G4	B4
	R3	G3	B3
	R2	G2	B2
	R1	G1	B1
LSB	R0	G0	B0

Note 3-3:

a. O = "Odd Pixel Data" E = "Even Pixel Data"

b. Refer to 3.4.1 LCD pixel format, the 1st data is 1 (Odd Pixel Data), the 2nd data is 2 (Even Pixel Data) and the last data is 1920 (Even Pixel Data).

3.4.3 Color versus Input Data

The following table is for color versus input data (8bit). The higher the gray level, the brighter the color.

Color	Gray Level	Color Input Data																								Remark
		RED data (MSB:R7, LSB:R0)								GREEN data (MSB:G7, LSB:G0)								BLUE data (MSB:B7, LSB:B0)								
		R7	R6	R5	R4	R3	R2	R1	R0	G7	G6	G5	G4	G3	G2	G1	G0	B7	B6	B5	B4	B3	B2	B1	B0	
Black	-	0	0	0	0	0	0	0	0	0	0	0	0	0	0	0	0	0	0	0	0	0	0	0	0	
White	-	1	1	1	1	1	1	1	1	1	1	1	1	1	1	1	1	1	1	1	1	1	1	1	1	
Gray 127	-	0	1	1	1	1	1	1	1	0	1	1	1	1	1	1	1	0	1	1	1	1	1	1	1	
Red	L0	0	0	0	0	0	0	0	0	0	0	0	0	0	0	0	0	0	0	0	0	0	0	0	0	Black
	:	:	:	:	:	:	:	:	:	:	:	:	:	:	:	:	:	:	:	:	:	:	:	:	:	
	L255	1	1	1	1	1	1	1	1	0	0	0	0	0	0	0	0	0	0	0	0	0	0	0	0	
Green	L0	0	0	0	0	0	0	0	0	0	0	0	0	0	0	0	0	0	0	0	0	0	0	0	0	Black
	:	:	:	:	:	:	:	:	:	:	:	:	:	:	:	:	:	:	:	:	:	:	:	:	:	
	L255	0	0	0	0	0	0	0	0	1	1	1	1	1	1	1	1	0	0	0	0	0	0	0	0	
Blue	L0	0	0	0	0	0	0	0	0	0	0	0	0	0	0	0	0	0	0	0	0	0	0	0	0	Black
	:	:	:	:	:	:	:	:	:	:	:	:	:	:	:	:	:	:	:	:	:	:	:	:	:	
	L255	0	0	0	0	0	0	0	0	0	0	0	0	0	0	0	0	1	1	1	1	1	1	1	1	

3.4.4 LVDS Specification

a. DC Characteristics:

Symbol	Description	Min	Typ	Max	Units	Condition
V_{TH}	LVDS Differential Input High Threshold	-	-	+100	[mV]	V_{CM} = 1.2V
V_{TL}	LVDS Differential Input Low Threshold	-100	-	-	[mV]	V_{CM} = 1.2V
$\lvert V_{ID} \rvert$	LVDS Differential Input Voltage	100	-	600	[mV]	
V_{CM}	LVDS Common Mode Voltage	+1.0	+1.2	+1.5	[V]	V_{TH}-V_{TL} = 200mV

LVDS Signal Waveform:

Use RxOCLK- & RxOCLK+ as example.

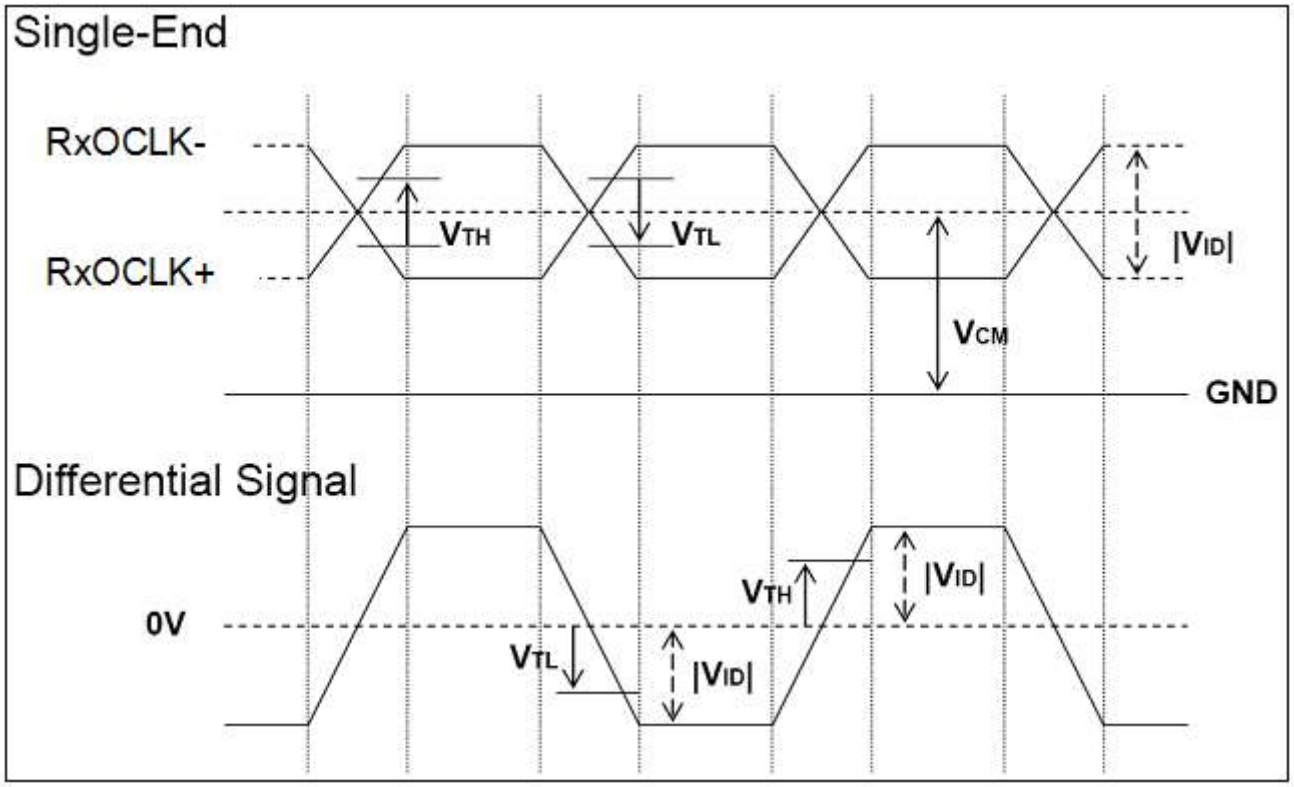

b. AC Characteristics:

Symbol	Description	Min	Max	Unit	Remark
F_{DEV}	Maximum deviation of input clock frequency during Spread Spectrum	-	± 3	%	
F_{MOD}	Maximum modulation frequency of input clock during Spread Spectrum	-	200	KHz	

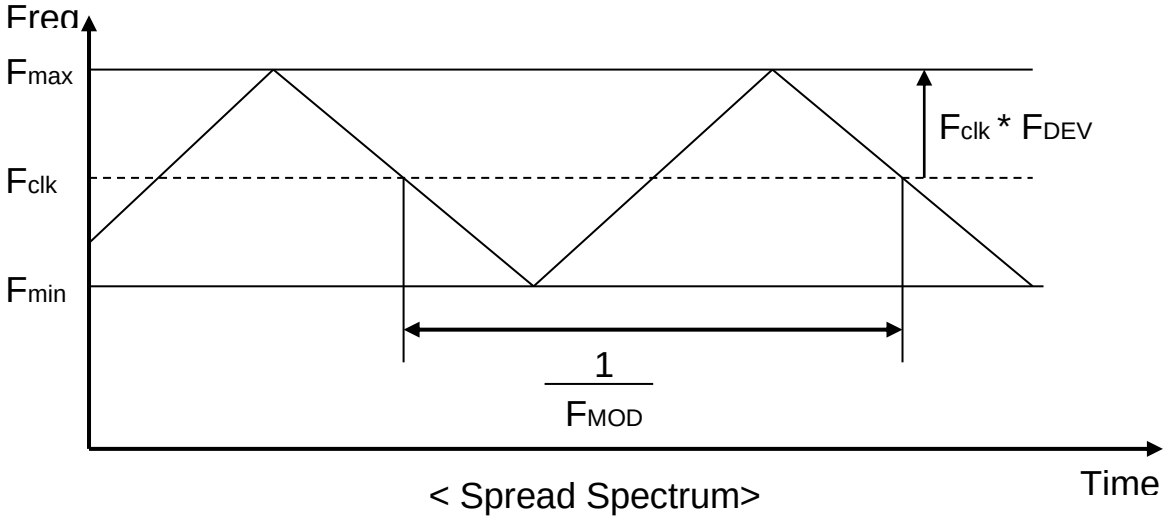

< Spread Spectrum>

Fclk: LVDS Clock Frequency

Parameter		Symbol	Value			Unit	Remark
			Min.	Typ.	Max.		
LVDS Interface	Input Channel Pair Skew Margin	tSKEW(CP)	-200	-	+200	Ps	Note 3-3
	Receiver Data Input Margin	tRMG				[ns]	Note 3-4
	Fclk=115 MHz		-0.20	-	+0.20		
	Fclk=110 MHz		-0.35	-	+0.35		
	Fclk=100 MHz		-0.38	-	+0.38		
	Fclk=85 MHz		-0.45	-	+0.45		
	Fclk=65 MHz		-0.60	-	+0.60		

3.4.5 Input Timing Specification

It only support DE mode, and the input timing are shown as the following table.

Symbol	Description		Min.	Typ.	Max.	Unit	Remark
Tv	Vertical Section	Period	1098	1160	2361	Th	
Tdisp (v)		Active	1080	1080	1080	Th	
Tblk (v)		Blanking	18	80	1281	Th	
Fv		Frequency	48	60	100	Hz	***Note 3-3***
Th	Horizontal Section	Period	1000	1050	1100	Tclk	
Tdisp (h)		Active	960	960	960	Tclk	
Tblk (h)		Blanking	40	90	140	Tclk	
Fh		Frequency	54.6	69.6	113.3	KHz	***Note 3-4***
Tclk	LVDS Clock	Period	8.83	13.7	18.32	ns	1/Fclk
Fclk		Frequency	54.6	73.1	113.3	MHz	***Note 3-5***

Note 3-3:100Hz mode: Frame rate 48~100Hz / The optimal Vertical Frequency is 50~100Hz for best picture quality.

Note 3-4: The equation is listed as following. Please don't exceed the above recommended value.

Fh (Min.) = Fclk (Min.) / Th (Min.);
Fh (Typ.) = Fclk (Typ.) / Th (Typ.);
Fh (Max.)= Fclk (Max.) / Th (Min.);

Note 3-5: The equation is listed as following. Please don't exceed the above recommended value.

Fclk (Min.) = Fv (Min.) x Th (Min.) x Tv (Min.);
Fclk (Typ.) = Fv (Typ.) x Th (Typ.) x Tv (Typ.);

Fclk (Min.)<Fv x Th x Tv < Fclk(Max.)

3.4.6 Input Timing Diagram

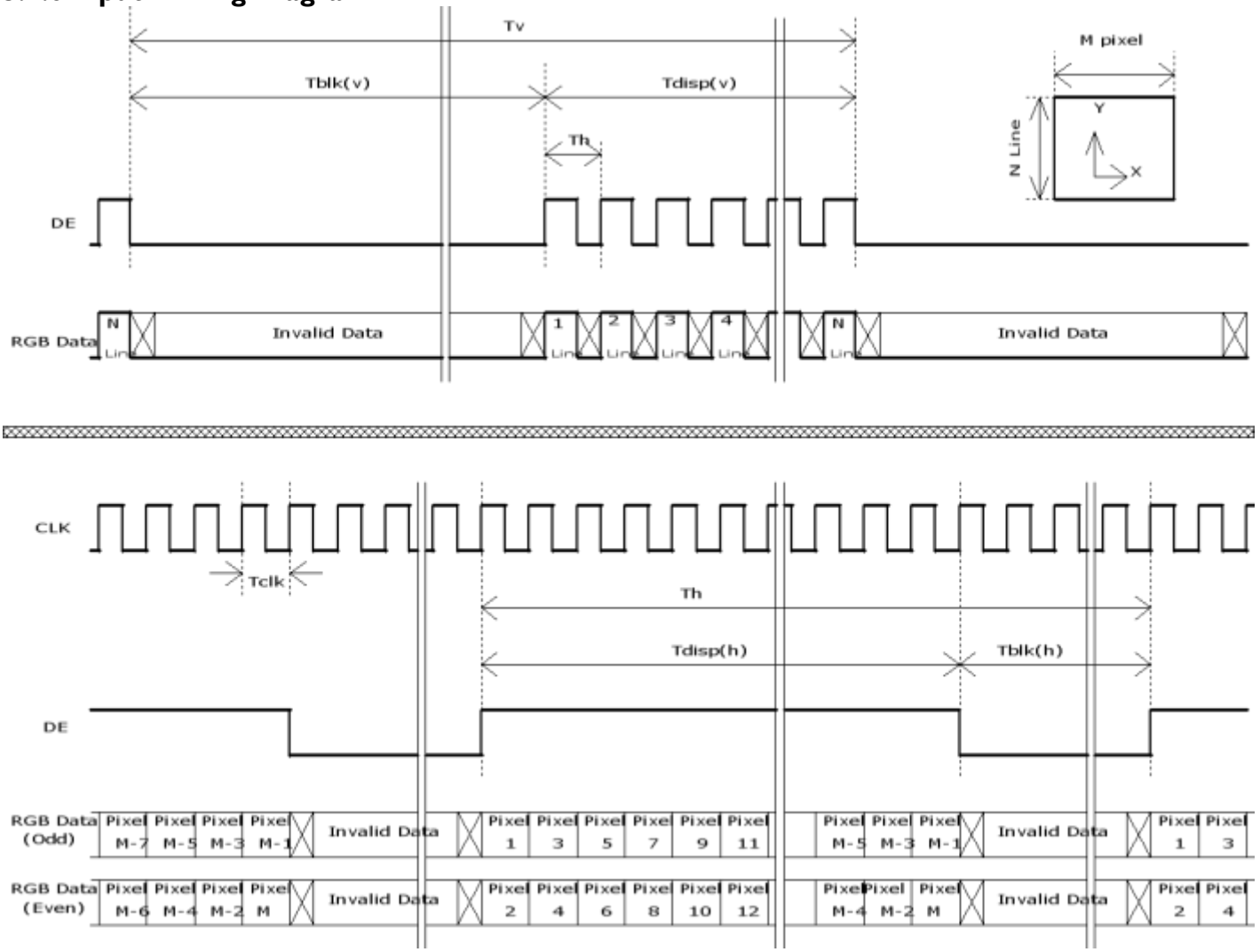

3.4.7 I2C Electrical Characteristics

(VDD=5V, VSDA/VSCL=3.3V, TA=25℃)

Parameter		Symbol	Min.	Typ.	Max.	Unit
I2C	SCL clock frequency	fSCL	-	-	350	kHz
	Clock Pulse Width Low	tLOW	1.85	-	-	us
	Clock Pulse Width High	tHIGH	0.4	-	-	us
	Clock Low to Data Output Valid	tAA	1.76	-	-	us
	Start Setup Time	tSTASU	0.6	-	-	us
	Start Hold Time	tSTAHD	0.6	-	-	us
	Stop Setup Time	tSTOSU	0.6	-	-	us
	Data In Setup Time	tDSU	0.1	-	-	us
	Data In Hold Time	tDHD	0	-	-	us
	SCL/SDA Rise Time	tR	-	-	0.3	us
	SCL/SDA Fall Time	tF	-	-	0.3	us

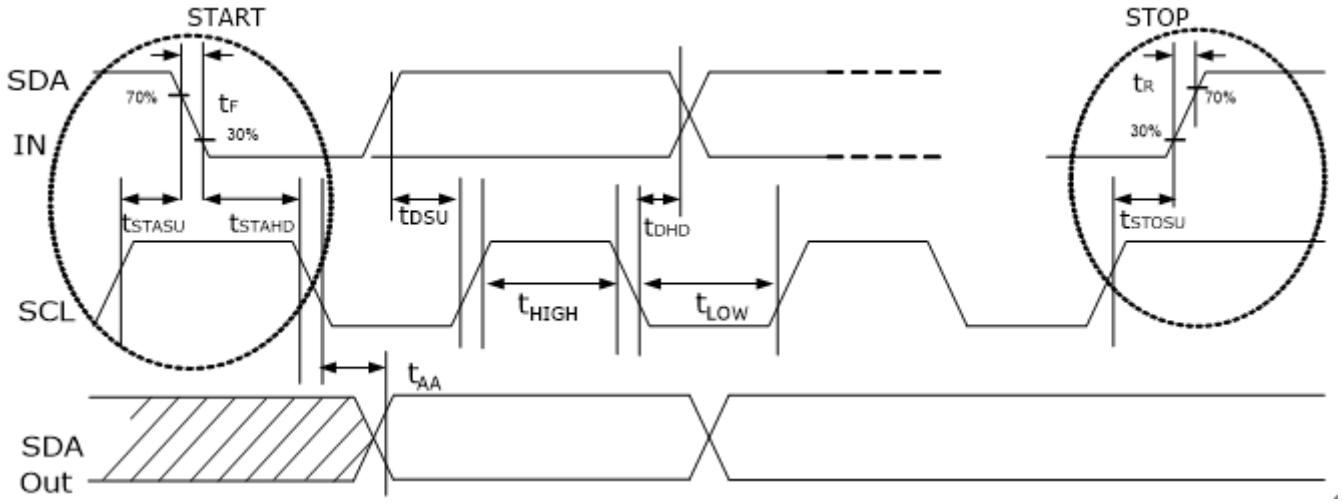

3.5 Power ON/OFF Sequence

VDD power,LVDS signal and backlight on/off sequence are as following. LVDS signals from any system shall be Hi-Z state when VDD is off.

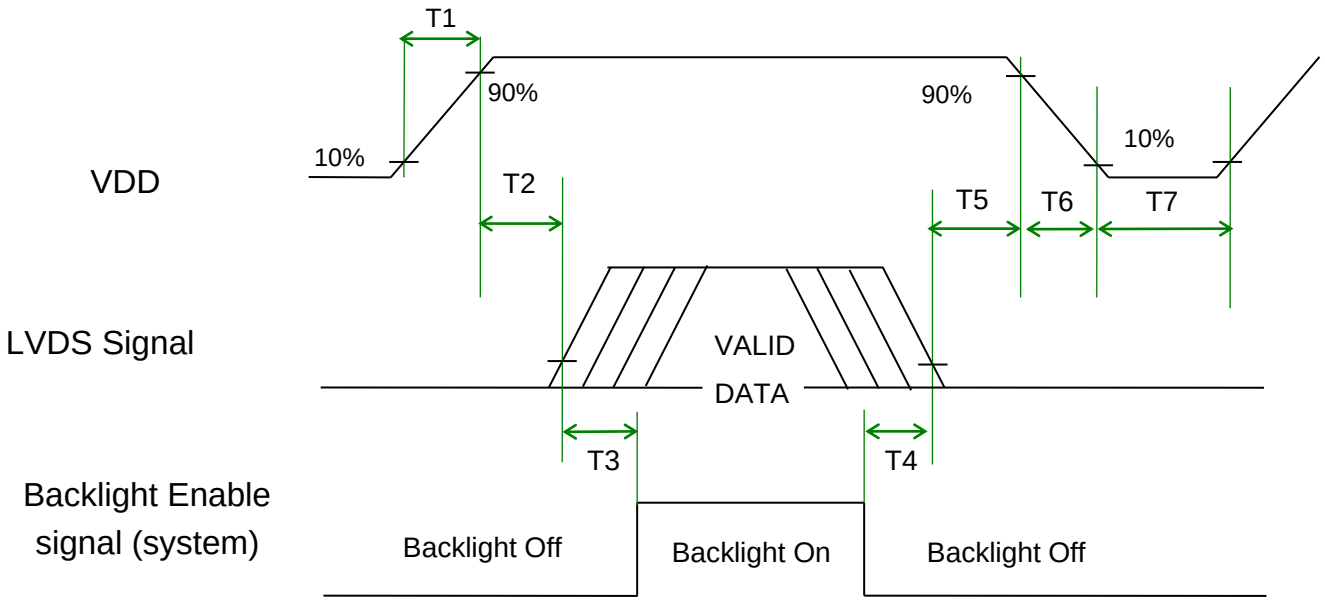

Power Sequence Timing

Symbol	Value			Unit	Remark
	Min.	Typ.	Max.		
T1	0.5	-	10	[ms]	
T2	0	-	50	[ms]	
T3	500	-	-	[ms]	
T4	100	-	-	[ms]	***Note 3-8***
T5	0		50	[ms]	***Note 3-6*** ***Note 3-7***
T6	0		200		***Note 3-9***
T7	1000	-	-	[ms]	

Note 3-6 : Recommend setting T5 = 0ms to avoid electronic noise when VDD is off.
Note 3-7 : During T5 period , please keep the level of input LVDS signals with Hi-Z state.
Note 3-8 : If T4 < 100ms, there will be no reliability concern, but the display may momentarily show abnormal screen.
Note 3-9: Voltage of VDD must decay smoothly after power-off.(customer system decide this value)

4 Backlight Unit

4.1 Characteristic of LED bar

23.8 inch Backlight Unit includes 56 pcs LED in one LED light bar. (4 strings and 14 pcs LED of one string).

4.2 Interface Connection

4.2.1 Connector Type

Backlight Connector	Manufacturer	CVILUX
	Part Number	CI1406M1VL0-NH
Mating Connector	Manufacturer	ENTERY
	Part Number	H112K-P06N-00B (Non-Locking Type) H112K-P06N-11B(White) (Locking type) H112K-P06N-13B(Black) (Locking type)

Backlight Connector dimension:

H x V x D = 7.7 x 4.35 x 3.5, Pitch = 1.0(unit=mm)

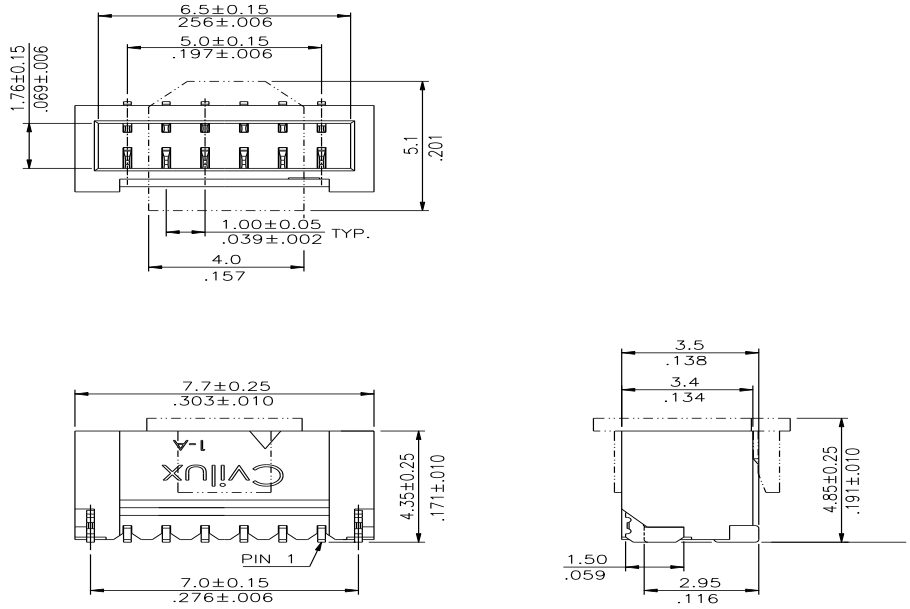

Mating Connector dimension:

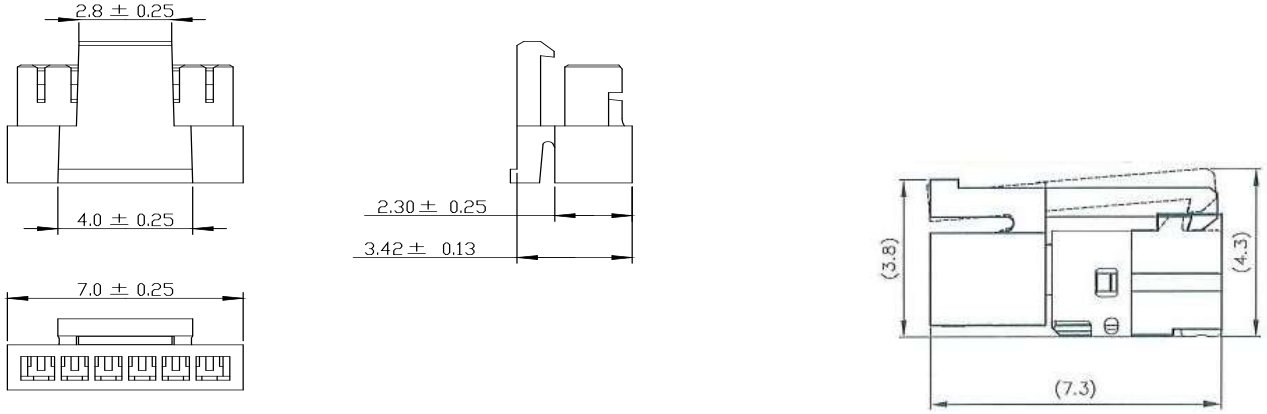

4.2.2 Connector Pin Assignment

Pin#	Symbol	Description	Remark
1	Ch1	LED Current Feedback Terminal (Channel 1)	
2	Ch2	LED Current Feedback Terminal (Channel 2)	
3	V_{SLED}	LED Power Supply Voltage Input Terminal	
4	V_{SLED}	LED Power Supply Voltage Input Terminal	
5	Ch3	LED Current Feedback Terminal (Channel 3)	
6	Ch4	LED Current Feedback Terminal (Channel 4)	

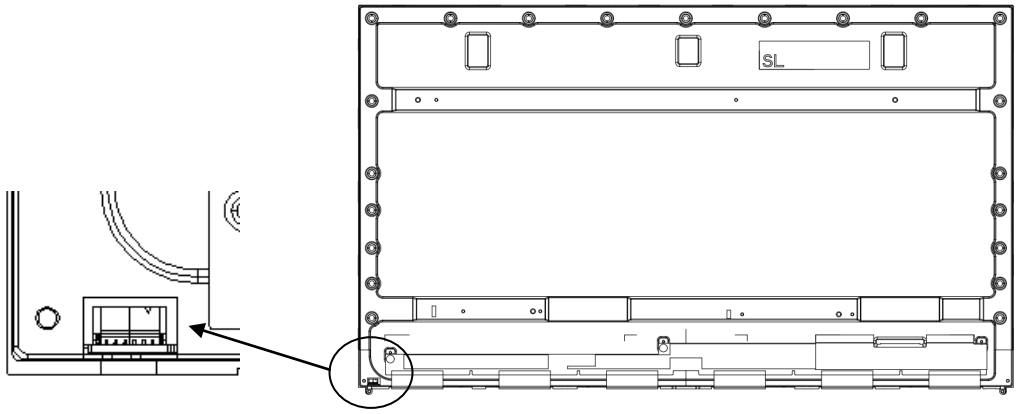

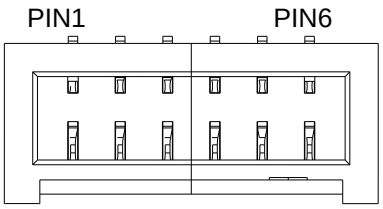

4.3 Electrical Characteristics

4.3.1 Recommended Operating Condition

(Ta=25°C)

Symbol	Description	Min.	Typ.	Max.	Unit	Remark
Is	250 nits LED String Current	-	75.5	83	[mA]	100% duty ratio of LED chip,
Is	300 nits LED String Current	-	80.5	89	[mA]	100% duty ratio of LED chip,
Vs	LED String Voltage	37.8	41.3	44.8	[Volt]	Is=75.5mA @ 100% duty ratio;
ΔVs	Maximum Vs Voltage Deviation of light bar	-	-	1.4	[Volt]	Is=75.5mA @ 100% duty ratio;
P_{BLU}	250 nits LED Light Bar Power Consumption	-	12.47	13.53	[Watt]	
P_{BLU}	300 nits LED Light Bar Power Consumption	-	13.30	14.71	[Watt]	
LT_{LED}	LED Life Time	30,000	-	-	[Hour]	
OVP	Over Voltage Protection in system board	110% Vsmax	-	-	[Volt]	***Note 4-1***
IFp	LED Pulse Forward Current	-	-	240	[mA]	Duty≦10% Pulse time within 10 ms
IFp	LED Pulse Forward Current	-	-	120	[mA]	Duty≦100%

Note 4-1: Recommendation for LED driver power design:

Due to there are electrical property deviation in LED & monitor set system component after long time operation. It's strongly recommend the design value of LED driver board OVP (over voltage protection) should be 10% higher than max. value of LED string voltage (Vs) at least.

Note 4-2: Recommend "Analog Dimming" method for backlight brightness control for Wavy Noise Free. Otherwise, recommend that Dimming Control Signal (PWM Signal) should be synchronized with Frame Frequency.

Note 4-3:

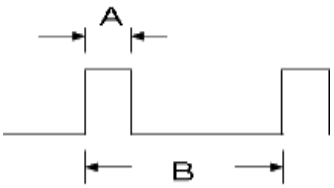

Duty ratio= (A / B) X 100%; (A: Pulse time, B: Period)

5 Reliability Test

Reliability test items are listed as following table. (*Bare Panel only*)

Items	Condition	Remark
Temperature Humidity Bias (THB)	Ta= 50℃, 80%RH, 300hours	
High Temperature Operation (HTO)	Ta= 50℃, 50%RH, 300hours	
Low Temperature Operation (LTO)	Ta= 0℃, 300hours	
High Temperature Storage (HTS)	Ta= 60℃, 300hours	
Vibration Test (Non-operation)	Acceleration: 1.5 Grms Wave: Random Frequency: 10 - 200 Hz Sweep: 30 Minutes each Axis (X, Y, Z)	
Shock Test (Non-operation)	Acceleration: 50 G Wave: Half-sine Active Time: 20 ms Direction: ±X, ±Y, ±Z (one time for each Axis)	
Thermal Shock Test (TST)	-20℃/30min, 60℃/30min, 100 cycles	***Note 5-1***

Note 5-1: a. A cycle of rapid temperature change consists of varying the temperature from -20℃ to 60℃, and back again. Power is not applied during the test.

b. After finish temperature cycling, the unit is placed in normal room ambient for at least 4 hours before power on.

Note 5-2 : Result Evaluation Criteria:

TFT-LCD panels test should take place after gradually cooling enough at room temperature

In the normal application, there should be no particular problems that may affect the display function.

6 Shipping Label

The label is on the panel as shown below: (Example)

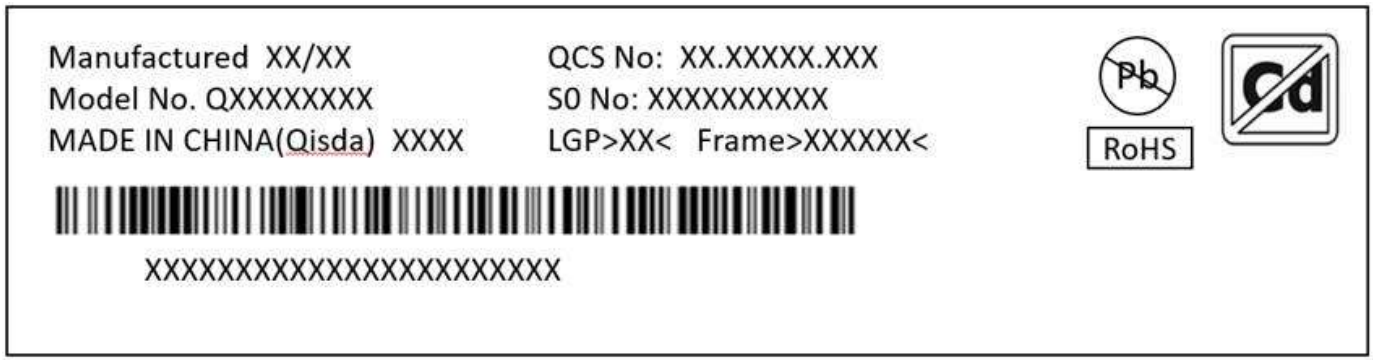

Note 6-1: For Pb Free products, Qisda will add for identification.

Note 6-2: For RoHS compatible products, Qisda will add for identification.

Note 6-3: For Cd Free products, Qisda will add for identification.

Note 6-4: The Green Mark will be presented only when the green documents have been ready by Qisda Internal Green Team.

7 Mechanical Characteristics

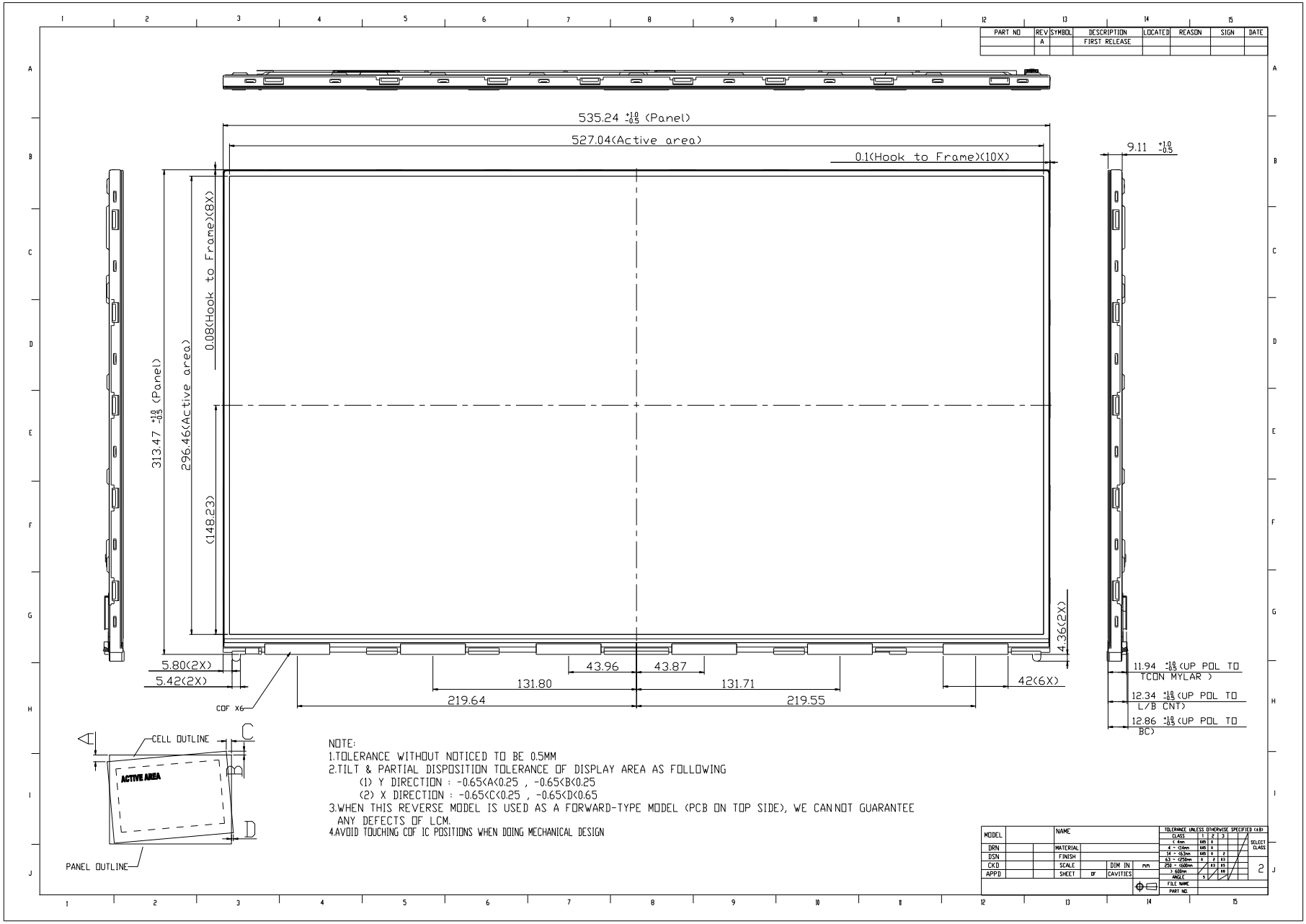

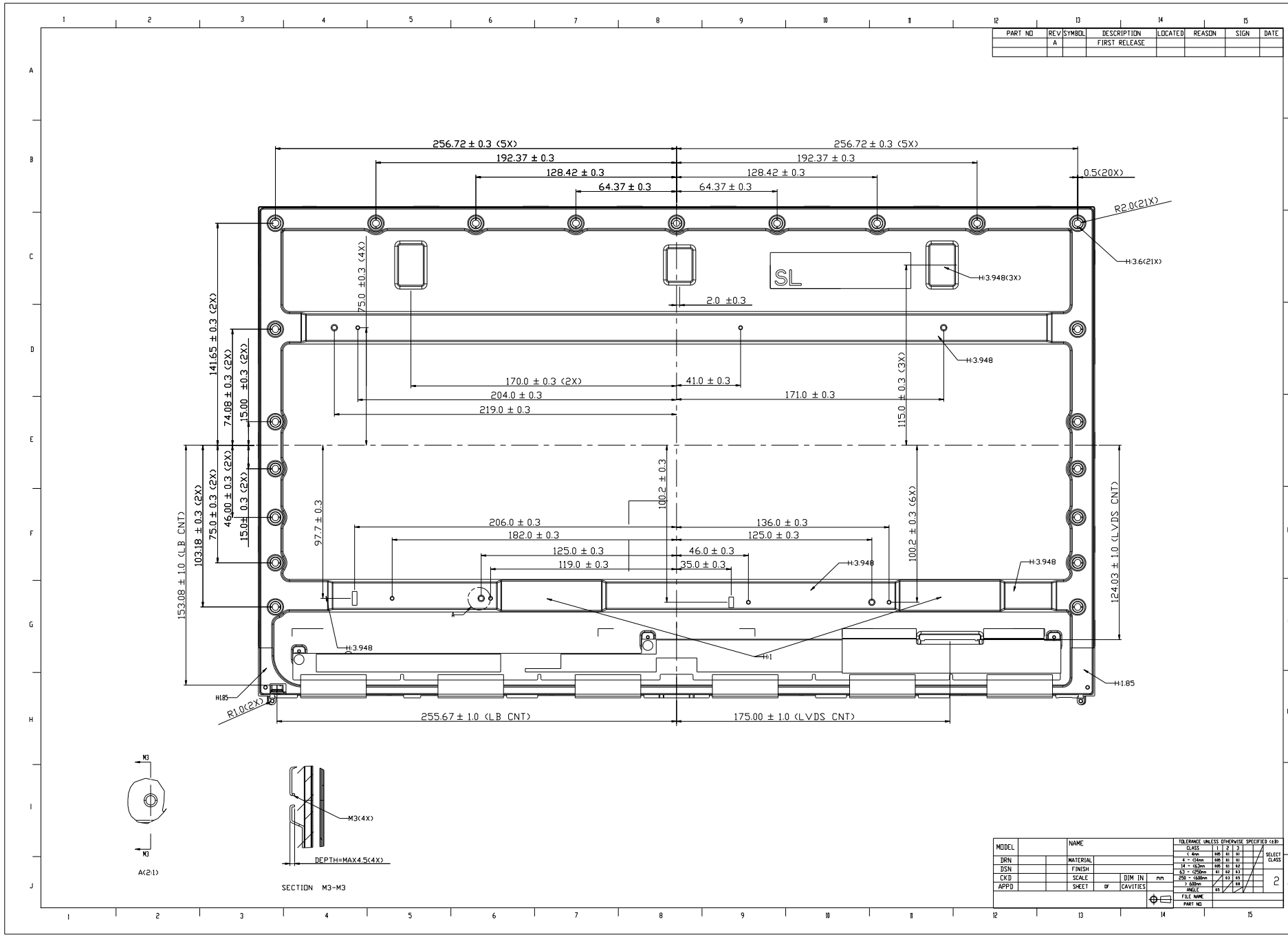
PART NO
REV
SYMBOL
DESCRIPTION
LOCATED
REASON
SIGN
DATE
A
FIRST RELEASE
256.72 ± 0.3 (5X)
192.37 ± 0.3
128.42 ± 0.3
64.37 ± 0.3
0.5(20X)
R2.0(21X)
H:3.6(21X)
SL
H:3.948(3X)
H:3.948
2.0 ±0.3
75.0 ±0.3 (4X)
141.65 ± 0.3 (2X)
74.08 ± 0.3 (2X)
15.00 ±0.3 (2X)
170.0 ± 0.3 (2X)
204.0 ± 0.3
219.0 ± 0.3
41.0 ± 0.3
171.0 ± 0.3
115.0 ± 0.3 (3X)
153.08 ± 1.0 (LB CNT)
103.18 ± 0.3 (2X)
75.0 ± 0.3 (2X)
46.00 ± 0.3 (2X)
15.0± 0.3 (2X)
97.7 ± 0.3
100.2 ± 0.3
100.2 ± 0.3 (6X)
124.03 ± 1.0 (LVDS CNT)
206.0 ± 0.3
182.0 ± 0.3
125.0 ± 0.3
119.0 ± 0.3
136.0 ± 0.3
125.0 ± 0.3
46.0 ± 0.3
35.0 ± 0.3
H:1
H:1.85
R1.0(2X)
255.67 ± 1.0 (LB CNT)
175.00 ± 1.0 (LVDS CNT)
M3
M3
A(2:1)
M3(4X)
DEPTH=MAX4.5(4X)
SECTION M3-M3
MODEL
NAME
DRN
DSN
CKD
APPD
MATERIAL
FINISH
SCALE
DIM IN
mm
SHEET
OF
CAVITIES
TOLERANCE UNLESS OTHERWISE SPECIFIED (±)
CLASS
SELECT CLASS
2
FILE NAME
PART NO.

8 8 Design Guide for System

8.1 The gap between LCM and system rear bracket should be bigger than 0.5mm.

8.2 The system bracket should be fixed on back cover firmly.

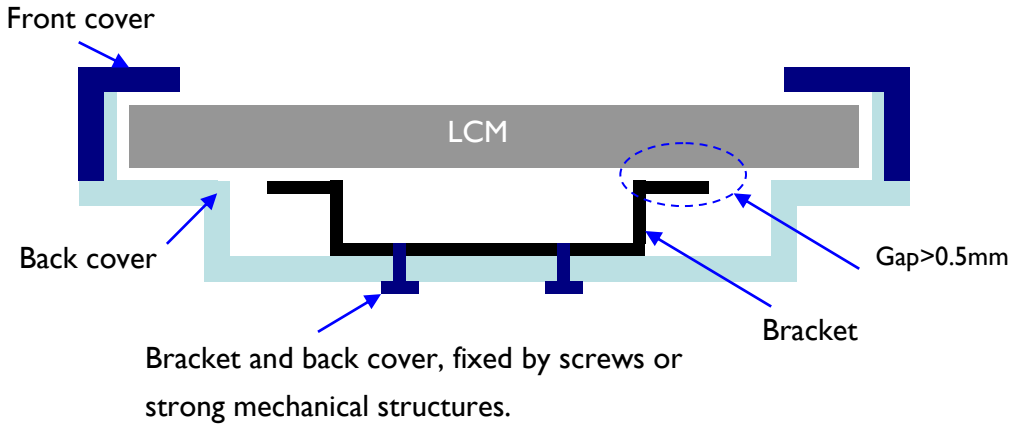

8.3 The EMI gasket should be uniform and not push panel strongly.

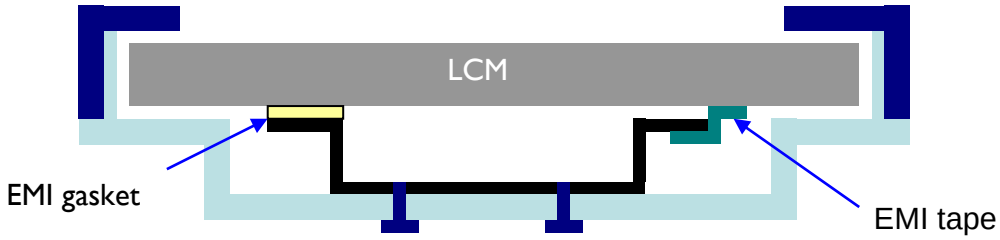

8.4 For stable assembly, the system bracket should use 4 screws to fix system and panel by dual sides.

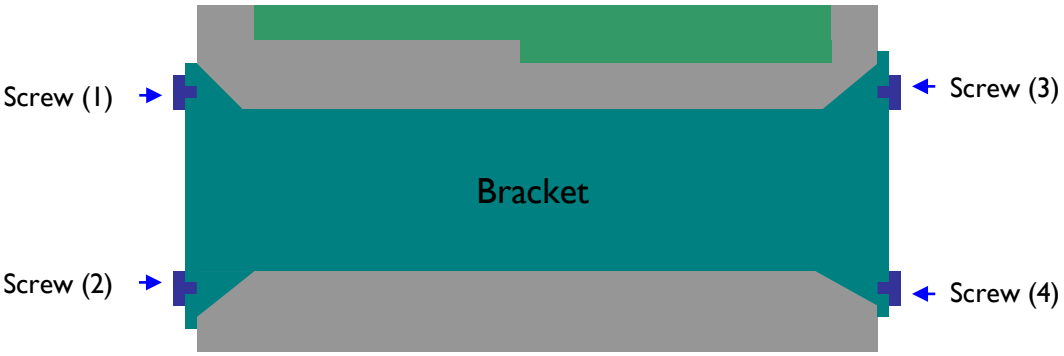

8.5 The system bracket and panel should be in parallel with having no gap after inserting screws.

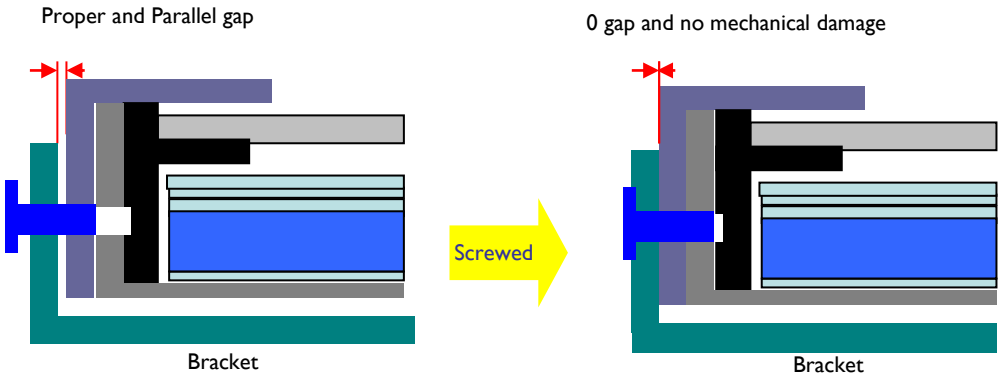

8.6 Avoid scratching LCM, the rib on system front-cover should not exceed the bottom edge of LCM's front-bezel.

