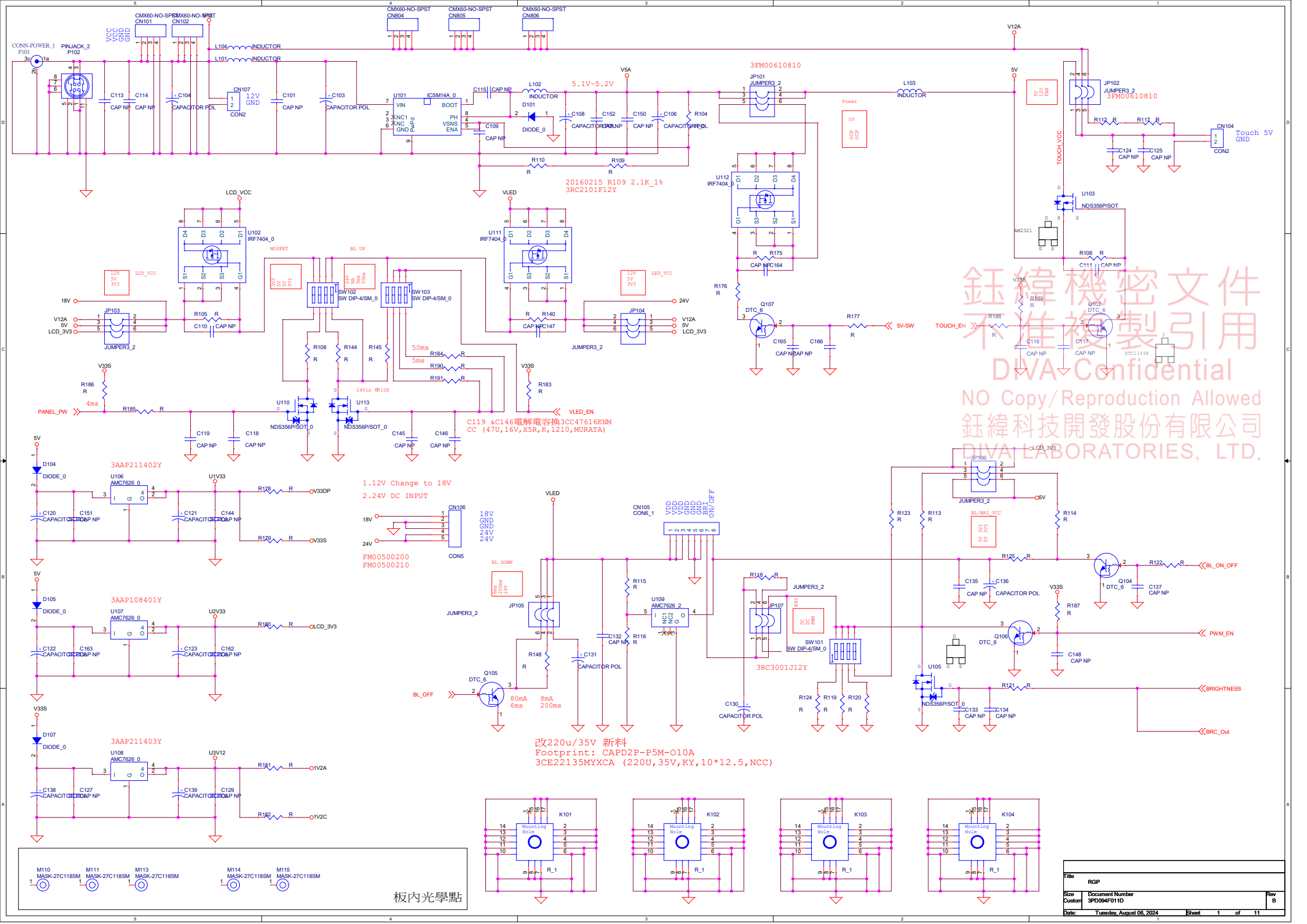

鈺緯機密文件
不准複製引用
DIVA Confidential
NO Copy/Reproduction Allowed
鈺緯科技開發股份有限公司
DIVA LABORATORIES, LTD.

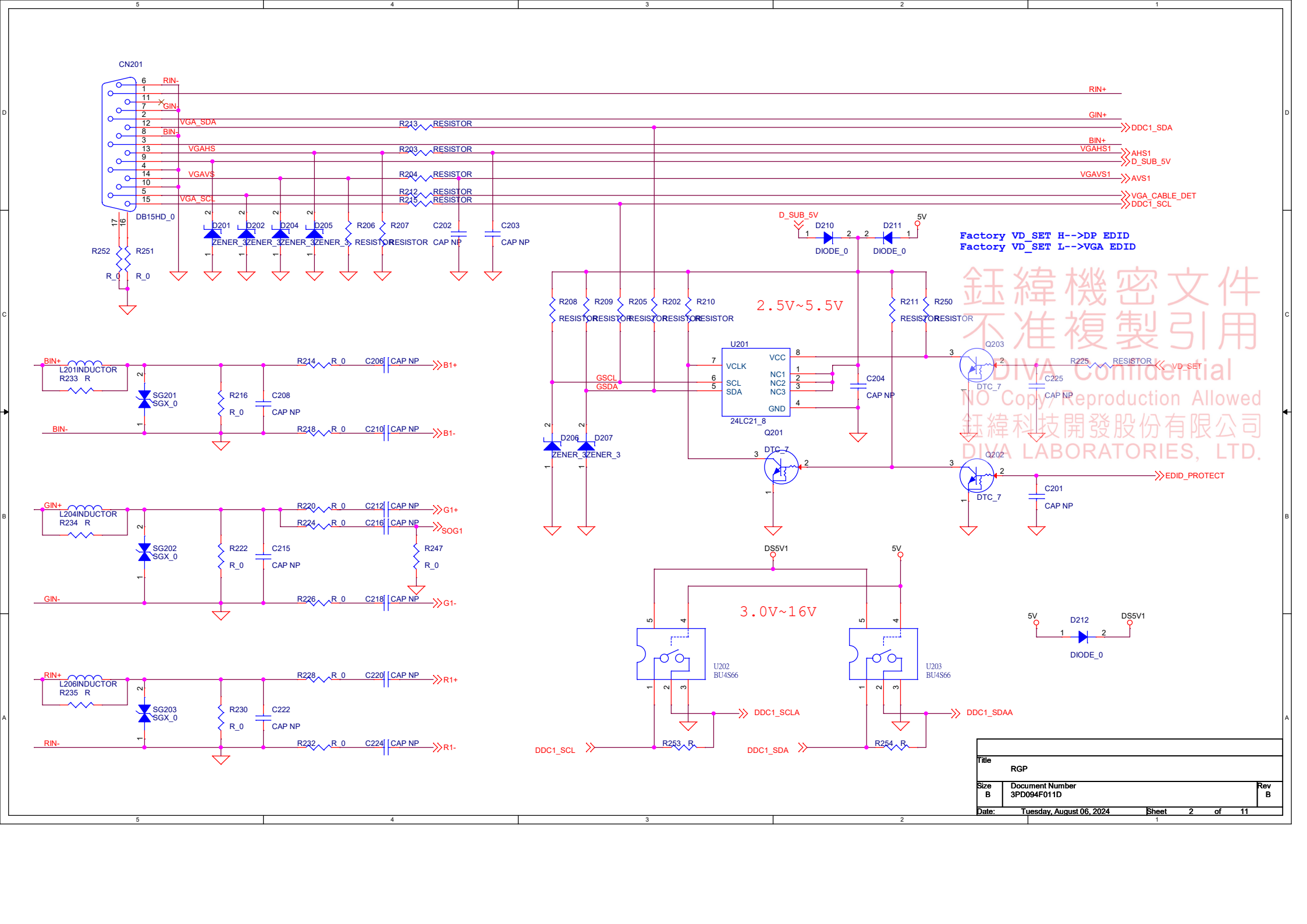

鈺緯機密文件
不准複製引用
DIVA Confidential
NO Copy Reproduction Allowed
鈺緯科技開發股份有限公司
DIVA LABORATORIES, LTD.

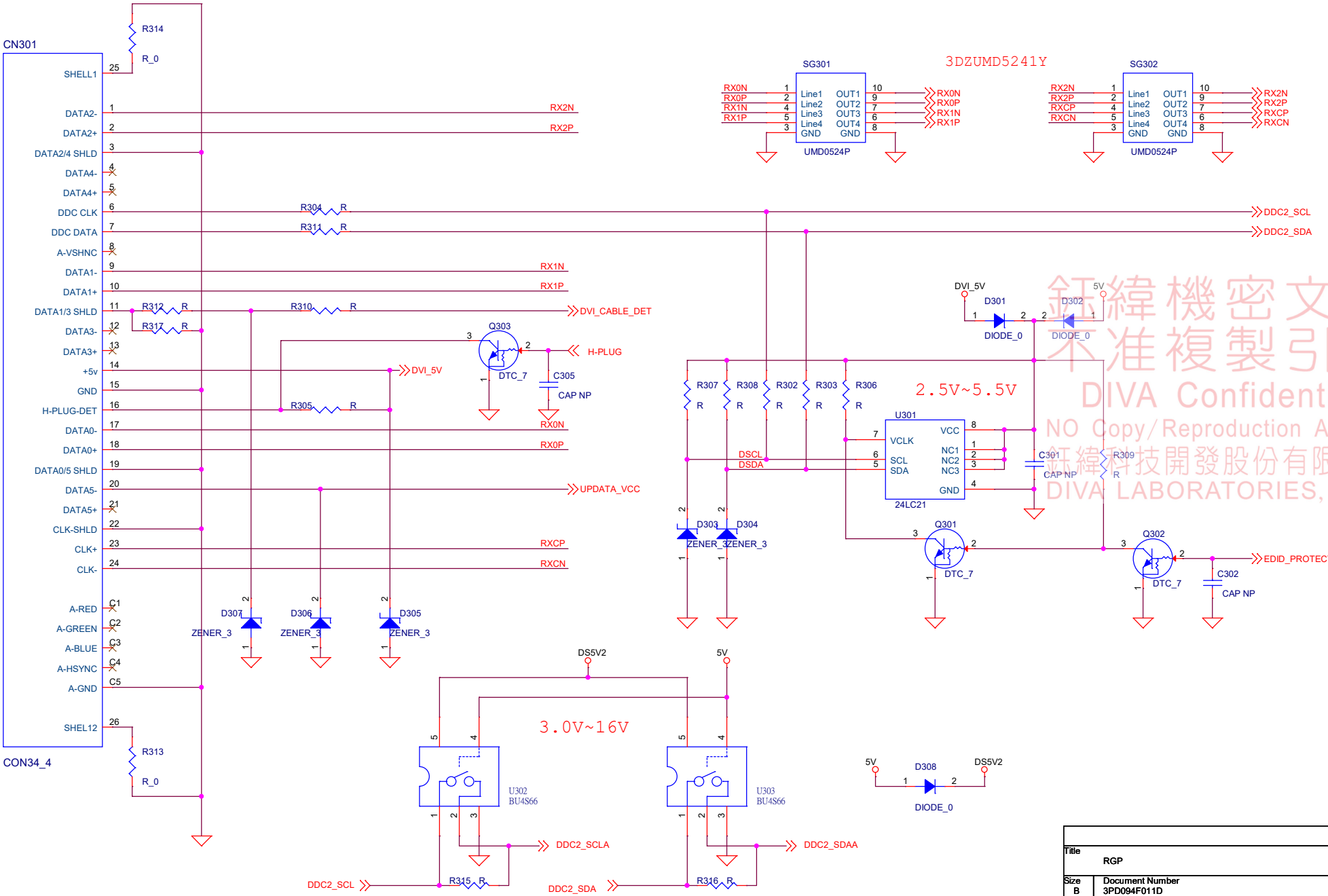

鈺緯機密文件
不准複製引用
DIVA Confidential
NO Copy/Reproduction Allowed
鈺緯科技開發股份有限公司
DIVA LABORATORIES, LTD.

Title	RGP	
Size B	Document Number 3PD094F011D	Rev B
Date: Tuesday, August 06, 2024	Sheet 3 of 11	

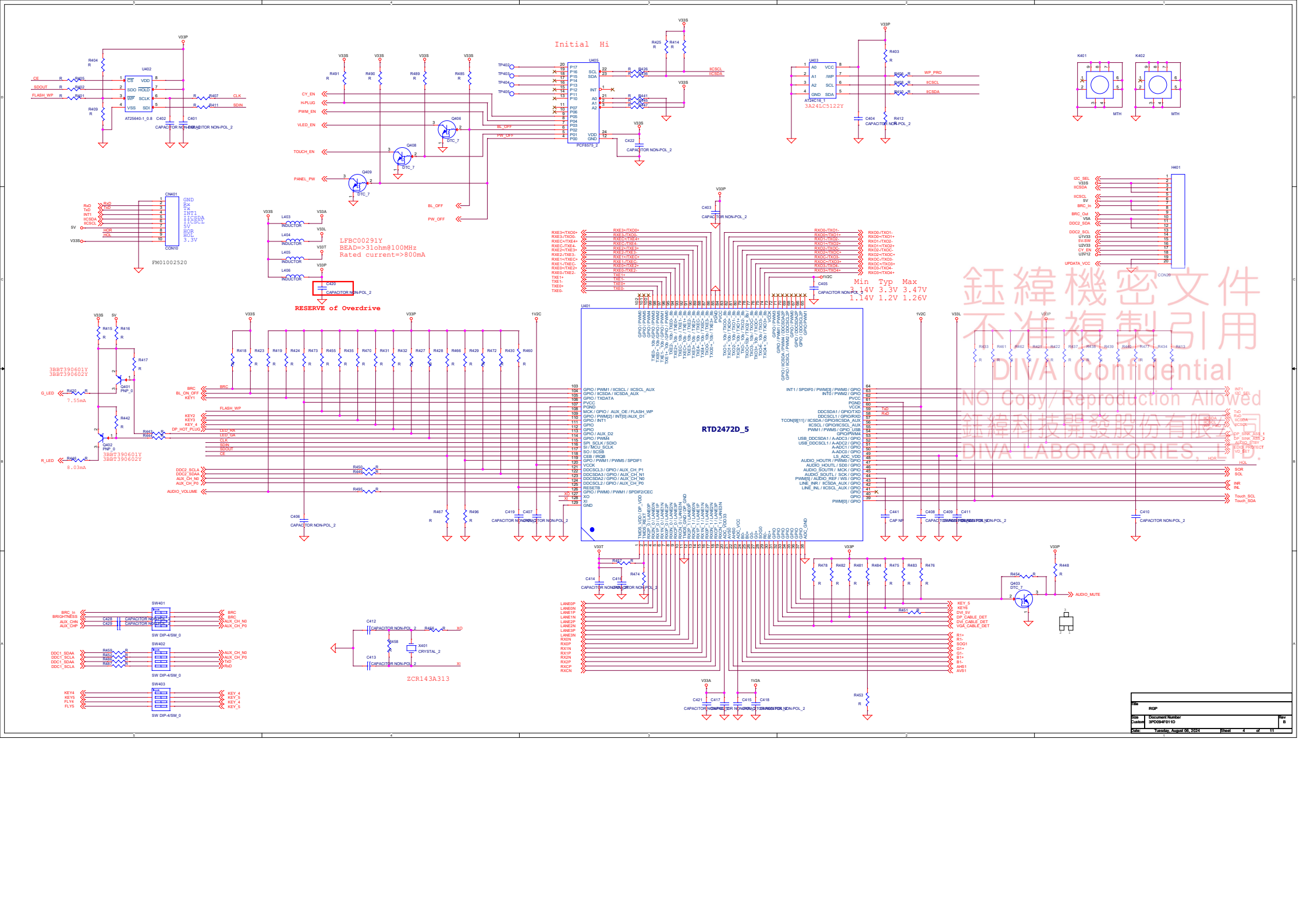

Title	RGP		
Size: Custom	Document Number: 3PD094F011D		Rev: B
Date: Tuesday, August 06, 2024	Sheet 4	of 11	

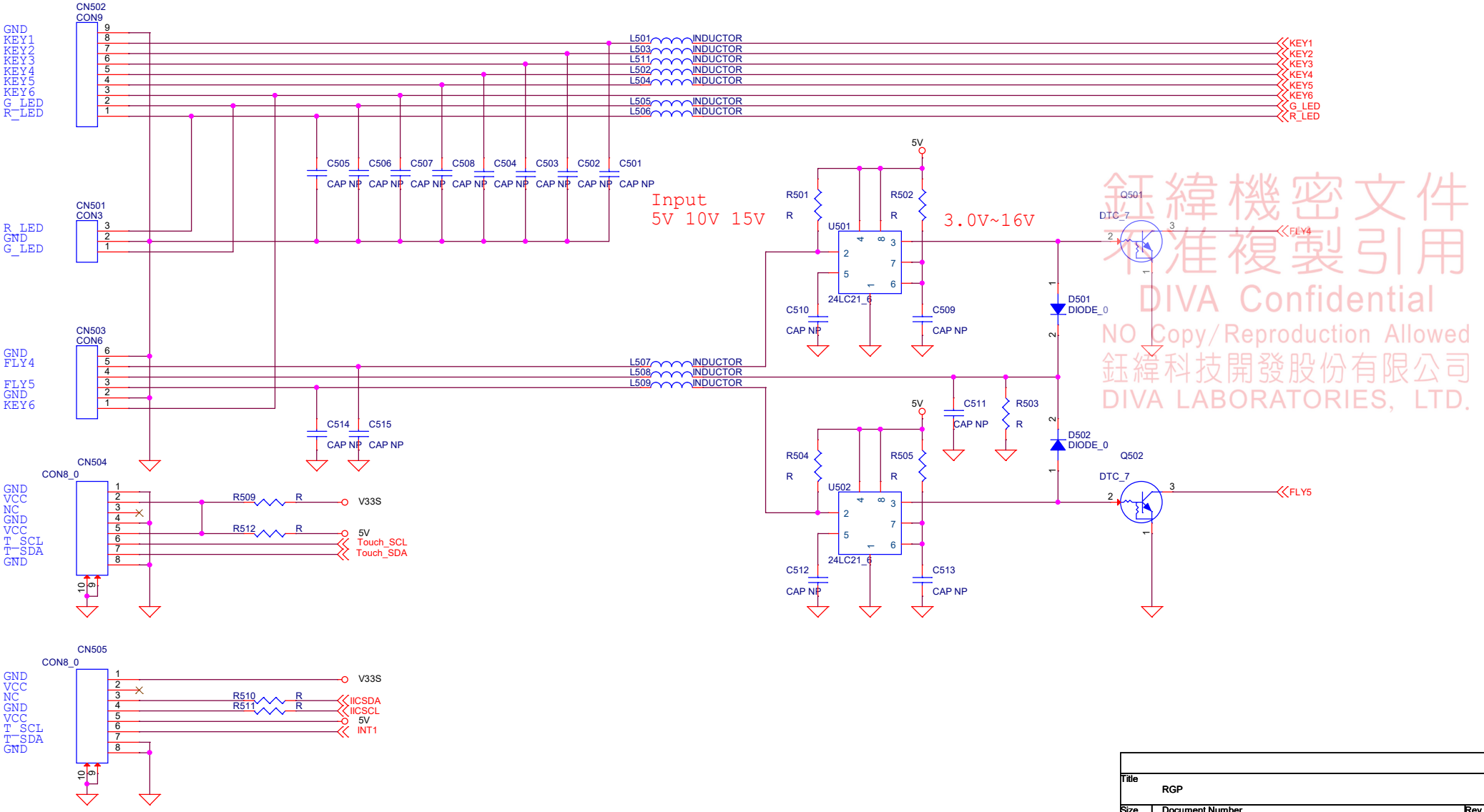

鈺緯機密文件
未准複製引用
DIVA Confidential
NO Copy/Reproduction Allowed
鈺緯科技開發股份有限公司
DIVA LABORATORIES, LTD.

Title: RGP		
Size: B	Document Number: 3PD094F011D	Rev: B
Date: Tuesday, August 06, 2024	Sheet 5 of 11	

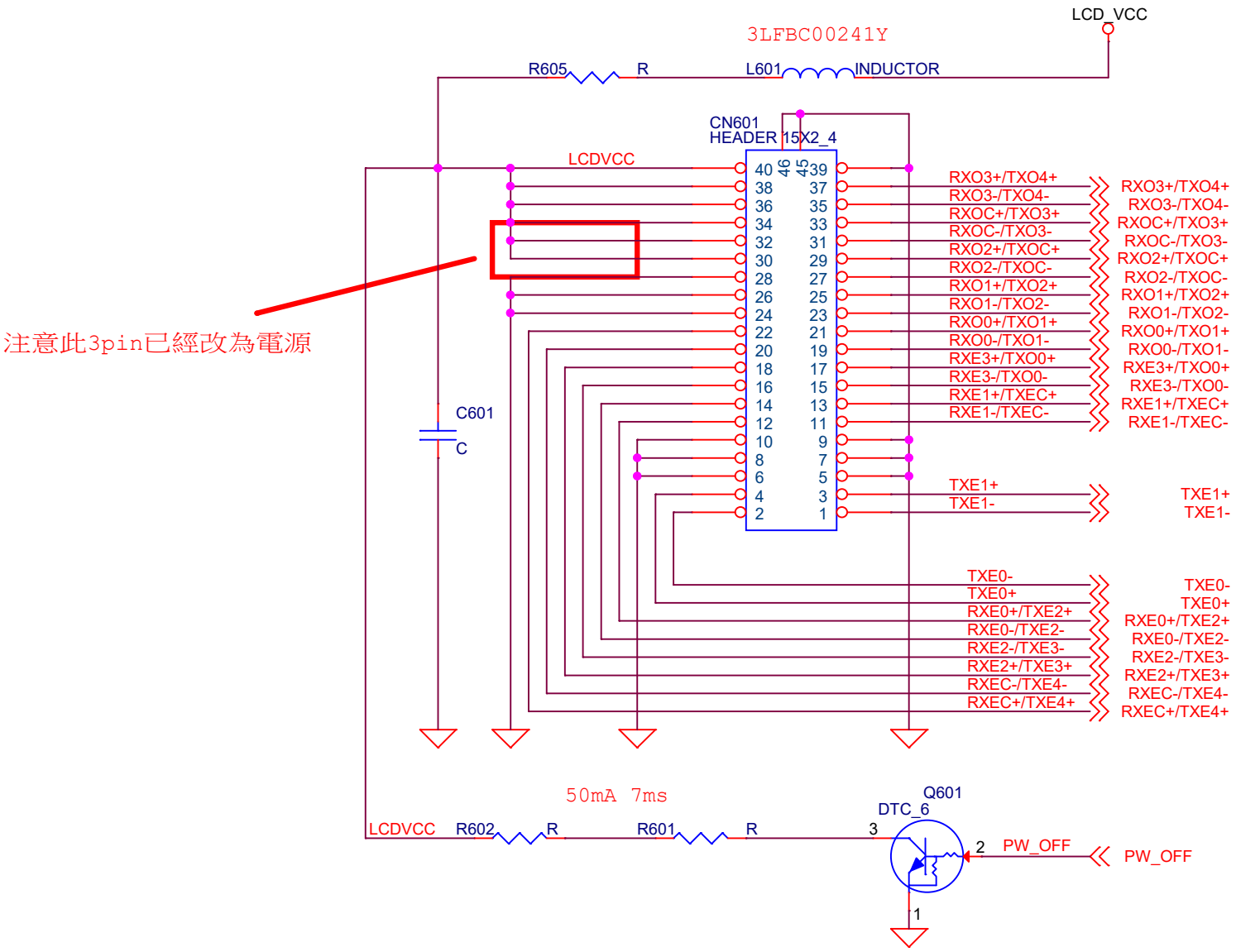

鈺緯機密文件
不准複製引用
DIVA Confidential
NO Copy/Reproduction Allowed
鈺緯科技開發股份有限公司
DIVA LABORATORIES, LTD.

Title: RGP			
Size: A	Document Number: 3PD094F011D		Rev: B
Date: Tuesday, August 06, 2024		Sheet 6 of 11	

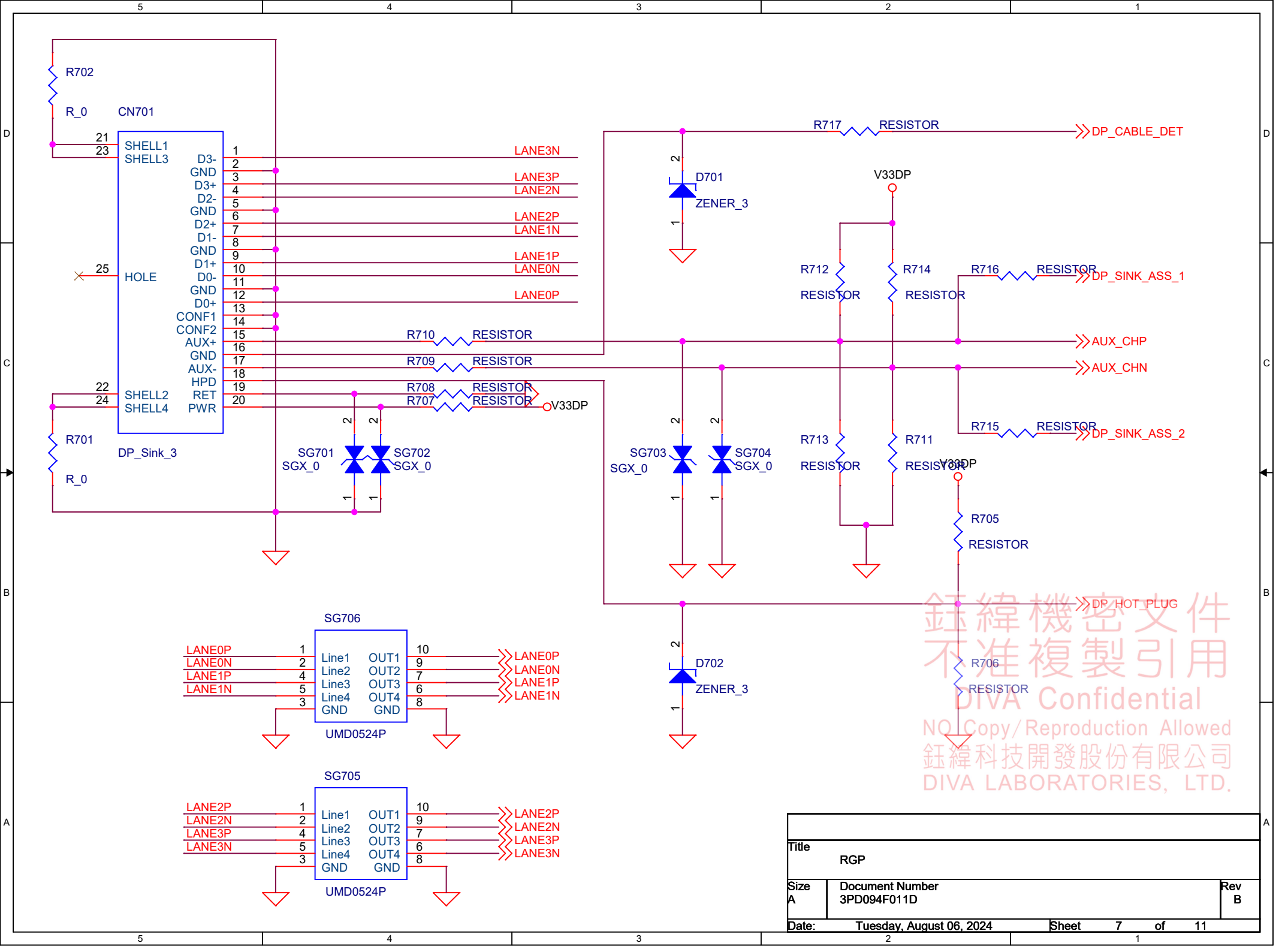

鈺緯機密文件
不准複製引用
DIVA Confidential
NO Copy/Reproduction Allowed
鈺緯科技開發股份有限公司
DIVA LABORATORIES, LTD.

Title	RGP		
Size A	Document Number 3PD094F011D		Rev B
Date: Tuesday, August 06, 2024		Sheet 7 of 11	

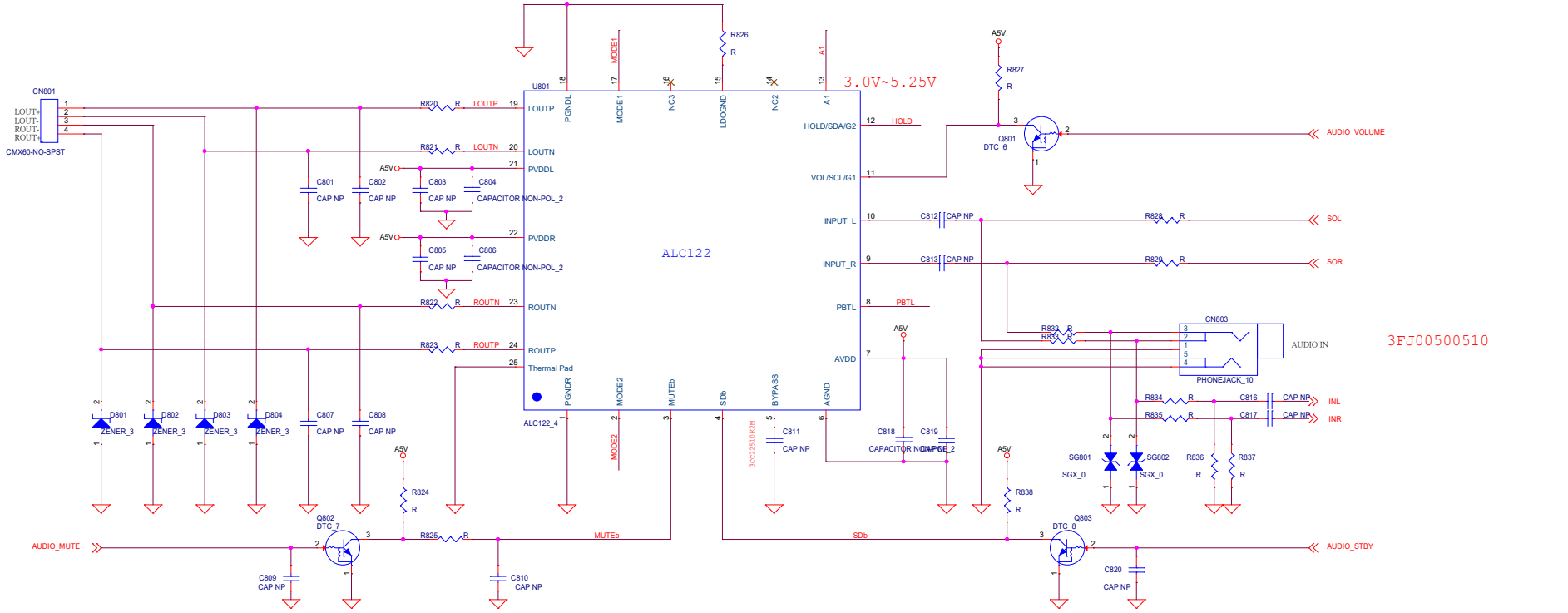

A1 change to Hi

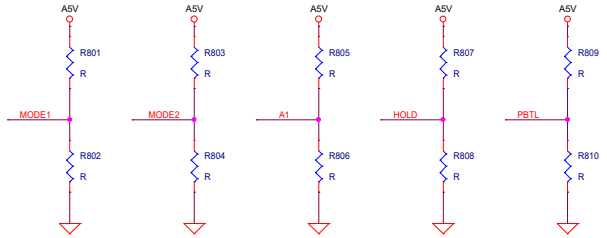

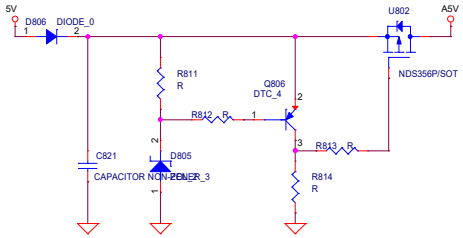

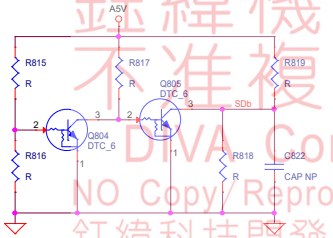

鈺緯機密文件
不准複製引用
DIVA Confidential
NO Copy/Reproduction Allowed
鈺緯科技開發股份有限公司
DIVA LABORATORIES, LTD.

Title	RGP	
Size C	Document Number 3PD094F011D	Rev A
Date: Tuesday, August 06, 2024	Sheet 8 of 11	