

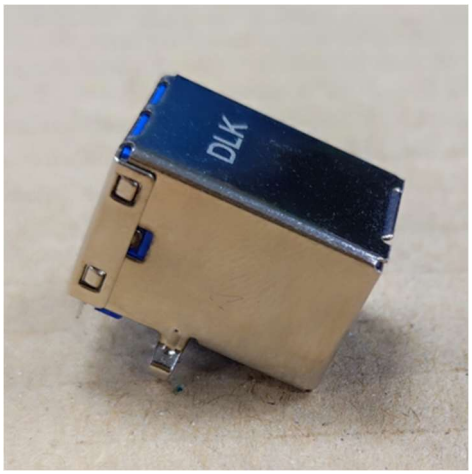

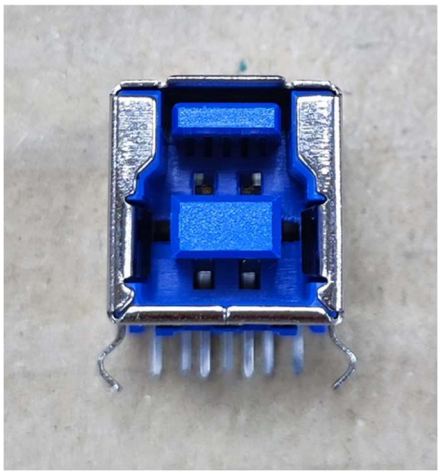

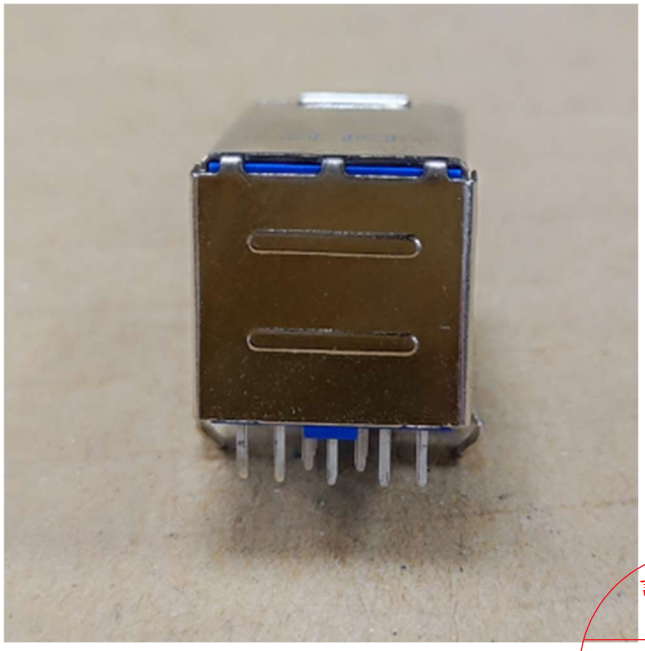



設計驗證
工程課
2024 -08- 29
發行
鈺鐘科技開發股份有限公司

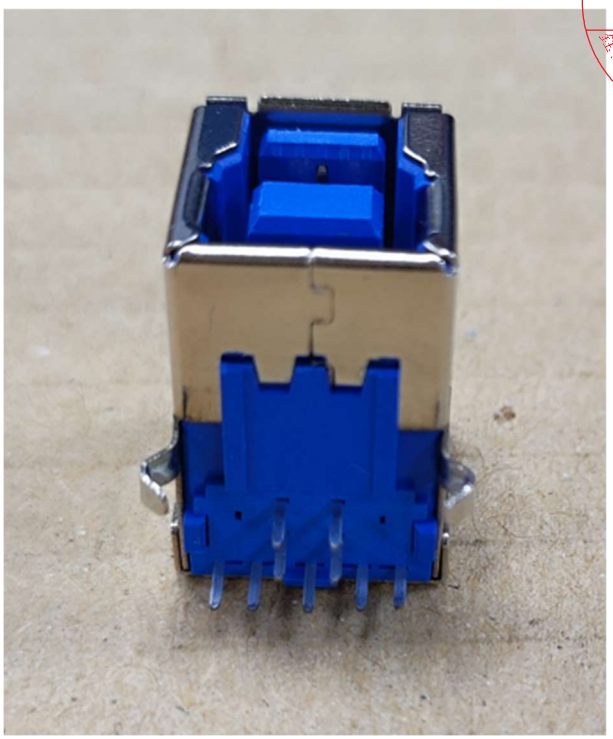

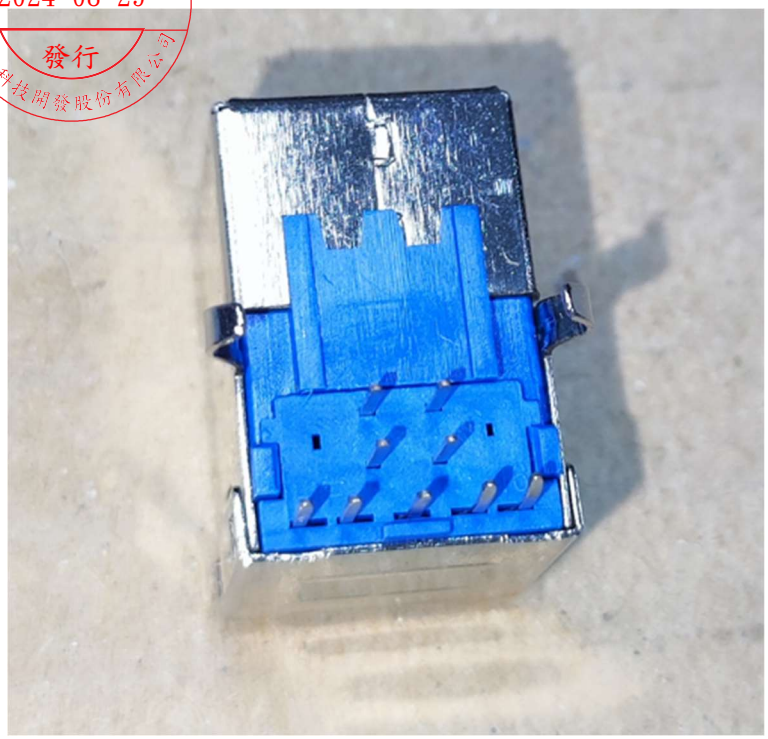

承　认　书

SPECIFICATION FOR APPROVAL

客　　户：钰纬科技开发股份有限公司
CUSTOMER

品　　名：USB 3.0 BF 90° DIP
DESCRIPTION

客户料号：3FU00901710 (F0301)
BUYER P/N.

DLK 料号：U3B22D-09LM4YN24HF
DLK P/N

客户承认意见栏 CUSTOMER APPROVED BY

設計驗證
工程課
2024-08-29
發行
鈺緯科技開發股份有限公司

昆山德力康电子科技有限公司
KUNSHAN DLK ELECTRONICS TECHNOLOGY CO.,LTD
地址：昆山市淀山湖镇黄浦江南路 278 号
TEL：0512-57498666　　FAX：0512-57498555

核准		审核		制作	邱宇	日期	2024 年 08 月 28 日

目　录

Directory

1. 封面

Cover

2. 目录

Directory

3. 履历表

Resume

4. 图面

Drawings

5. 规格书

Specification

6. 环保资料

Environmental protection information

7. 环境管理物质不使用证书

Environmental management material don't use certificate

COMPONENT SPEC VERSION RECORD

CUSTOMER PART NO.	3FU00901710	DLK PART NO.	U3B22D-09LM4YN24HF

VER	MINUTE OF CHANGES	DLK CHECK	RELEASE DATE
A	CHECKED AND RELEASED	邱宇	2024-8-28

符合"DLK环境管理物质技术标准"

符合USB3.0协会规范标准"

工程变更通知单 ECN(DCN) NO.	版本 REV	日期 DATE	说明 DESCRIPTION	变更 CHANGE	核准 APPRO.
KSECN18058	A	20181109	NEW RELEASE	——	——
KSECN19039	B	20190722	增加镀金30u"规格 Ⓑ*1	覃智森	王永辉
KSECN24025	C	20240521	增加镀金15u"规格 Ⓒ*1	邱宇	段国强

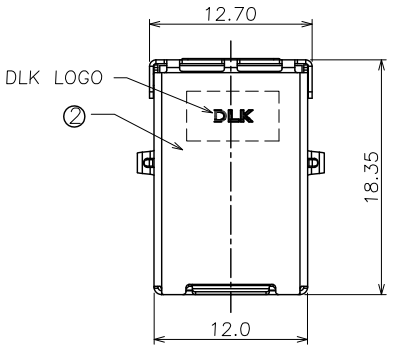

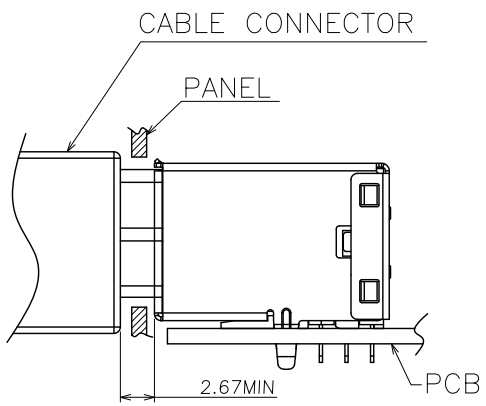

RECESSED MOUNTING CONFIGURATION

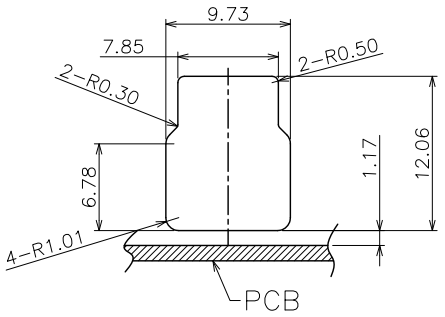

MOUNTING PANEL CUTOUT(INTERNAL SIDE)

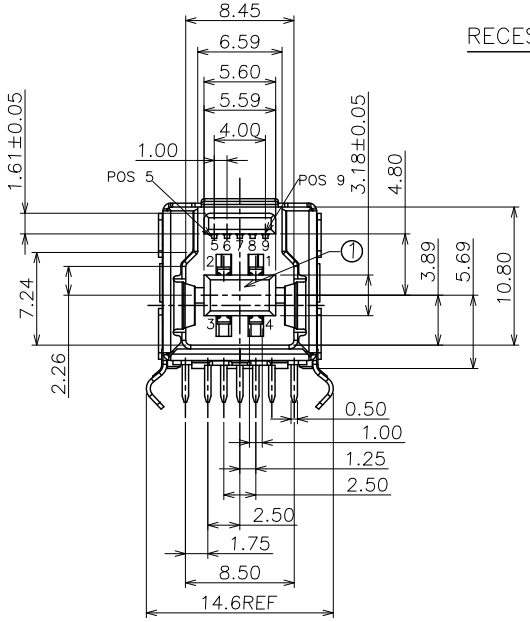

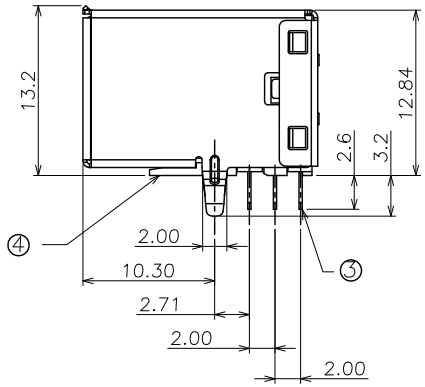

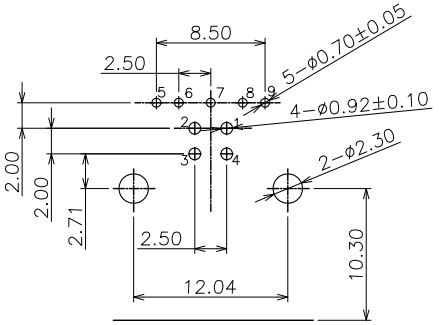

PCB LAYOUT(TOP VIEW T=1.60)

U3B22 D-09 L ** Y N2 4 HF
① ② ③ ④ ⑤ ⑥ ⑦ ⑧

① PRODUTION CODE（产品编码）:
U3B22: USB 3.0 BF DIP

② CHARACTER（特征）:
D:DIP TYPE

③ POSITION（位数）:
09: 9PIN

④ COLOR OF HOUSING(本体颜色）:
L:BLUE

⑤ PLATING OF CONTACT(端子电镀）:
M1 : Au 1U" AND MATTE TIN 50U" PLATED
→ Ⓒ M4 : Au 15U" AND MATTE TIN 50U" PLATED
Ⓑ M5 : Au 30U" AND MATTE TIN 50U" PLATED

⑥ PACKAGE(包装）:
Y :TRAY PACKAGE

⑦ PLATING OF SHELL(铁壳电镀）:
N2 :Ni plated

⑧ TYPE:
4 :弯脚 12.84H

設計驗證
工程課
2024-08-29
發行
旺鐽科技開發股份有限公司

3FU00901710(F0301)

产品净重：4.72g

NO.	ITEM	Q'TY	DESCRIPTION	FINISH
4	COVER	1	PA9T	UL94V-0 无卤
3	CONTACT	9	C2680/C5191	Au PLATED
2	SHELL	1	SPCC	Ni PLATED
1	HOUSING	1	PA9T	UL94V-0 无卤

GENERAL TOLERANCE UNLESS OTHERWISE NOTED	
Angle	±5°
X.	±0.38
.X	±0.30
.XX	±0.25
.XXX	±0.15
A4	

德力康电子科技有限公司
DELIKANG ELECTRONICS TECHNOLOGY CO.,LTD

C	名称 TITLE:	USB 3.0 BF 90° DIP			
档案名称 FILE NAME.	C-U3B22-04-HF		料号 PART NO:	U3B22D-09LM4YN24HF	
DRAWING	覃智森	CHECKED	——	APPROVED	严成旺
UNIT:	mm	SCALE	1:1	SHEET: 1 of 1	

符合"DLK环境管理物质技术标准"

工程变更通知单 ECN(DCN) NO.	版本 REV	日期 DATE	说明 DESCRIPTION	改变 CHANGE	承认 APPRO.
KSECN18058	A	20181109	NEW RELEASE	——	——
KSECN19039	B	20190722	增加U3B22D-09LM5YN24HF料号 B *1	覃智森	王永辉
KSECN24025	C	20250521	增加U3B22D-09LM4YN24HF料号 C *1	邱 宇	段国强

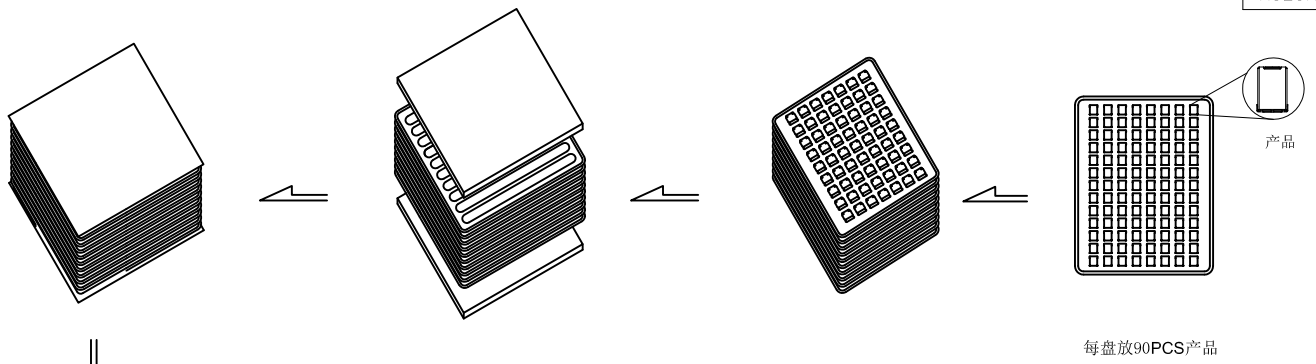

包装说明:

1. 包装数量:

一盘=90PCS, 一箱为2520PCS

2. 注意包材脏污破损不可使用，包装过程中注意不可碰伤刮伤产品

3.适用料号:

U3B22D-09LM1YN24HF

→ U3B22D-09LM4YN24HF C

U3B22D-09LM5YN24HF B

4.外箱材质K=K,要求破裂强度为6Kgf，

规格：480L*325W*300H

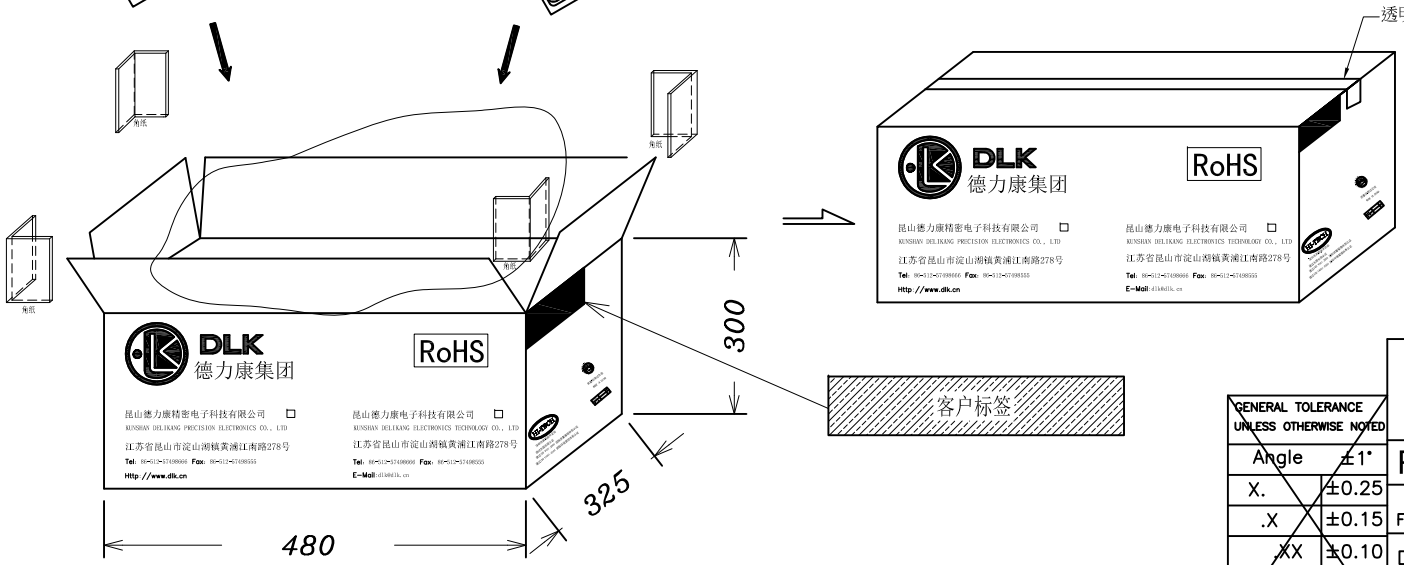

設計驗證
工程課
2024-08-29
發行
鈺鏵科技開發股份有限公司

GENERAL TOLERANCE UNLESS OTHERWISE NOTED	
Angle	±1°
X.	±0.25
.X	±0.15
.XX	±0.10
.XXX	±0.05
A4	

德力康电子科技有限公司
DELIKANG ELECTRONICS TECHNOLOGY CO.,LTD

P	名称 TITLE:	U3B22包装图			
档案名称 FILE NAME.	P-U3B22-04-HF		PART NO: (OLD)	U3B22D-09LM*YN24HF	
DRAWING	覃智森	CHECKED	——	APPROVED	严成旺
UNIT:	mm	SCALE	1:1	SHEET: 1 of 1	

Material BOM List

料件名稱/料號 ： U3B22D-09LM4YN24HF

廠商名稱 ： DLK

版本 Version :A

Customer P/N :3FU00901710 (F0301)

日期 Date ： 2024-8-28

依循國際標準或是協會標準: 依据USB协会规范

項目 ITEM	部位 Position description	廠商名稱 supplier	底材材質 Bottom material	FLAME , UL NO	顏色,色碼 Color , Number	底材主要組成 Component of Bottom material	第一層材質 Material of first layer	鍍層濃度範圍 Plating layer thickness	第二層材質 Material of Second layer	鍍層濃度範圍 Plating layer thickness
1	Housing/ Cover	KLL/DLK	PA9T	UL:E90350 UL94V-0	BLUE					
2	Contact	GT/DLK	C2680/C5191			Cu	Ni	50u"Min	接触端：Au 焊锡端：Matte Tin	接触端：15u"Min 焊锡端：100u"Min
3	Shell	HW/DLK	SPCC			Fe	Ni	40u"Min		

Note = Paint thickness unit : u"

Approve:段国强　　Check:覃智森　　Prepare:邱宇

PRODUCT SPECIFICATION

1.0 Applicable Connector: Applicable to DLK USB Series connector.

（适用于德力康公司 USB 系列连接器.）

Scope: This specification covers the requirements for product performance and test methods of DLK's USB Series Connectors of the part numbers specified as bellow.

（覆盖范围：此规格书内容含盖德力康公司 USB 系列连接器产品性能及测试方法。）

2.0 Rating（要求）：

2.1 Rated Voltage: ＜36V AC,DC（额定电压：＜36 V）

2.2 Rated Current: 1.5 A（额定电流：1.5 A）

2.3 Electric Pressure: Keeping 60 second in AC 500V/1mA(耐压 500V AC 持续 60 秒）

2.4 Insulation Resistance: 1000 MΩ Min. in DC 500V(绝缘阻最小 1000 兆欧)

2.5 Contact Resistance: 30 mΩ Max. (接触阻抗最大 30 毫欧)

2.6 Temperature Range:-55℃ to +85℃.（适用温度范围：-55℃ 至 +85℃）

3.0 Test Condition（测试条件）：

All tests shall be performed as bellow conditions unless otherwise specified.

（所有的测试都在下列条件下完成，除非另有说明.）

3.1 Temperature range : +15℃to35℃.（ 温度：+15℃至 35℃）

3.2 Humidity range: 25%to85%.（湿度：25%至 85%）

3.3 Atmospheric Pressure : 860 to 1060 mber （大气压力： 860 至 1060 兆帕）

4.0 Mechanical Characteristics（机械性能）

4.1 Insertion Force(mating connector):3.57Kgf/Max;

4.2 Extraction Force(unmating connector):1.0Kgf/Min

5.0Test Methods and Requirements（测试方法和要求）：

5.1Examination of product（检查尺寸）：

Item (条目)	Test Description （测试内容）	Test Methods （测试方法）	Requirement （要求）
5.1.1	Examination of product Outward Appearance Structure （产品外形/尺寸检查）	Shall be confirm with eyes in accordance with each drawing. Shall be confirmed by using proper measuring instruments. （依照图面要求对产品目视检查，再用测量工具，按图面要求测量尺寸）	Outward appearance shall be good without such injurious problem structure shall be meet the design and dimensional requirements of drawing （外观良好，无任何有害问题；结构符合图面设计要求。）

5.2 Electrical performance（电气性能）：

Item (条目)	Test Description （测试内容）	Test Methods （测试方法）	Requirement （要求）
5.2.1	Contact Resistance （接触阻抗）	Mated connectors. Contact: measure by dry circuit, 20 mvolts maximum., 10mA Shell: measured by open circuit, 5 Volts maximum, 100mA. (ANSI/EIA-364-06A-83) （配对的连接器，端子在回路施加直流最大 20mV 10mA 的电流；铁壳在回路施加直流最大 5V 100mA 的电流；再测量相对应端子或铁壳的电阻值）	Excluding conductor resistance : 30 mΩ maximum. （接触阻抗最大不能超过 30 毫欧）
5.2.2	Insulation Resistance （绝缘阻抗）	Applied DC 500 Volts for 1minute between adjacent terminal. (ANSI/EIA 364-21, Method 302) （在相邻的端子间施加 DC 500V 的电压测试 1 分钟；）	1).Initial:1000MΩ minimum 2)After test:1000MΩ minimum （测试前最小为 1000 兆欧；测试后最小为 1000 兆欧）
5.2.3	Dielectric Strength （耐电压）	Applied AC 500 Volts and leak current 1mA for 1minute between adjacent terminal . (ANSI/EIA 364-20,Method 301) （在相邻的端子间施加 AC 500V 的电压与 1mA 漏电流测试 1 分钟；	500 V AC for one minute at sea level 1).No flashover or insulation breakdown 2).Leakage current: 0.5mA Maximum （500V 交流 1 分钟测试；无断裂击穿现象；漏电电流最大为 0.5 毫安）

5.3 Mechanical Performance（机械性能）：

Item (条目)	Test Description （测试内容）	Test Methods （测试方法）	Requirement （要求）
5.3.1	Connector Insertion Force（插入力）	Solder each of the plug and receptacle connector to the P.C.Board then do insertion/extraction along the axis 3 times at speed 12.5mm. After place each of the P.C.Board onto the push-on/pull-off machine to be measurement the insertion force. (ANSI/EIA-364-13) （将公、母座焊接在 PCB 板上，再将 PCB 板置于插拔力实验机上，然后以每分钟 12.5mm 的速度沿轴向插拔 3 之次后再测试其插入力。）	Insertion force：3.57Kgf Max. 插入力： 3.57Kgf Max.

5.3.2	Connector Withdrawal Force （拔出力）	Solder each of the plug and receptacle connector to the P.C.Board then do insertion/extraction along the axis 3 times at speed 12.5mm. After place each of the P.C.Board onto the push-on/pull-off machine to be measurement the insertion force. (ANSI/EIA-364-13) （将公、母座焊接在 PCB 板上，再将 PCB 板置于插拔力实验机上，然后以每分钟 12.5mm 的速度沿轴向插拔 3 之次后再测试其拔出力。）	Withdrawal Force：1.0Kgf Min. 拔出力： 1.0Kgf Min.
5.3.3	Durability （寿命）	Solder each of the plug and receptacle connector to the P.C. Board,then place each of the P.C. Board onto the push-on/pull-off machine,then do insertion / Withdrawal 1500 cycles along the axis at speed of 200 650 cycles per hours （ANSI/EIA 364-09） （将公、母座焊接在 PCB 上，再将 PCB 板置于耐插拔实验机上，然后以每小时 200±50 次的速度沿轴向插拔 1500 次）	Contact resistance: 30 mΩ Max. （接触阻抗最大 30 毫欧）
5.3.4	Contact Retention Force （端子保持力）	The pull speed shall be 25mm to 100mm per min. （以每秒 25mm 到 100mm 的速度拉伸） （ANSI/EIA 364-35）	1.0Kgf or more per pin （ 保持力为 1.0Kgf）

4.4 Environmental Performance（环境性能）：

Item (条目)	Test Description （测试内容）	Test Methods （测试方法）	Requirement （要求）
5.4.1	Salt Spray （盐水喷雾）	Salt density:5% Temperature: 35± 2℃ 盐水浓度：5% 温度：35± 2℃ After keeping in above surrounding for 48 hours EIA-364-26	

膜厚类型	测试时间	判定
USB2.0 & USB3.0		
金属与非金属折弯处	24H	无氧化,锈蚀（端子焊脚镀锡处不作要求）
外部连接 Port	24H	
接触端镀金(包含 15u"与 15u"以上)	48H	
接触端镀金(包含 15u"以下)	48H	

PRODUCT SPECIFICATION

5.4.2	Withstand humidity （恒温恒湿）	Solder each of the plug and receptacle connector to the P.C.Board ,then mate them together and exposed at temperature of 50℃±2℃ and humidity of 90-95% for a period of 96 hours. after removal from chamber, socket shall be returned at room condition for a period of 2 hours. the socket shall be capable of. （ANSI/EIA-364-31） （将公母座连接器各自焊接于 PCB 板上后将其对插再暴露在温度为 50℃±2℃，湿度为 90-95%的恒温恒湿槽中放置 96 小时进行测试，完成测试后将插座取回在常温常湿下放置 2 小时后测定。）	1）Appearance: no damage（外观无损害） 2）Contact resistance: 30 mΩ Max. （接触阻抗最大 30 毫欧） 3）Insulation resistance: 1000 megaohms minimum. （绝缘阻抗最小 1000 兆欧） 4 ） dielectric withstanding Voltage: AC 500V No Breakdown. （耐电压 AC 500V 测试无损坏）
5.4.3	Withstand heat （耐热）	The connector shall be exposed in a hot chamber at temperature of 85±2℃ for a period of 96 hours ,shall then be returned at room conditions for 2 hours. the socket shall be capable of satisfactory performance. （ANSI/EIA-364-17） (将连接器暴露在温度为 85±2℃的恒温恒湿槽中放置 96 小时后，再在室温下自然干燥 2 小时后，绝缘部分应无变形、裂痕、金属部分无变色。)	1）Appearance: no obvious damage on appearance and configuration （外观和构造无损坏） 2）Contact resistance: 30 mΩ Max. （接触阻抗最大 30 毫欧）
5.4.4	Withstand cold （耐寒）	The connector shall be exposed in a cold chamber at temperature of -25℃±2℃ for a period of 48 hours, shall then be returned at room conditions for 2 hours, the socket shall be capable of satisfactory performance. （ANSI/EIA-364-17） (将连接器暴露在温度为-25±2℃的恒温恒湿槽中放置 48 小时后，再在室温下自然干燥 2 小时后，绝缘部分应无变形、裂痕、金属部分无变色。)	1）Apearance: no obvious damage on appearance and configuration （外观和构造无损坏） 2）Contact resistance: 30 mΩ Max. （接触阻抗最大 30 毫欧）
5.4.5	Composite temperature/humidity cyclic （高低温循环）	The socket shall be subjected to the condition described below, for a total of 25 cycles, first step -40℃±3℃/0.5h, second step: 25℃±3℃/0.5h , third step: 85℃±3℃/0.5h （ANSI/EIA-364-17） 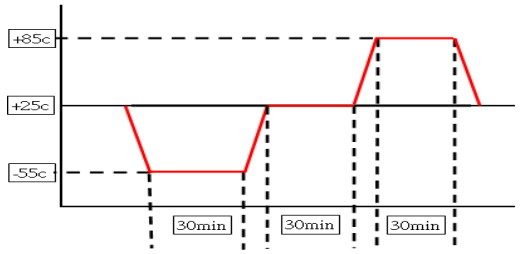 (在下列条件下持续进行 25 次循环测试,第一步：-40℃±3℃/0.5h，第二步：25℃±3 ℃/0.5h，第三步：85℃±3 ℃/0.5h)	1）Appearance: no damage（外观无损害） 2）Contact resistance: 30 mΩ Max. （接触阻抗最大 30 毫欧） 3）Insulation resistance: 1000 megaohms minimum. （绝缘阻抗最小 1000 兆欧） 4 ） dielectric withstanding Voltage: AC 500V No Breakdown. （耐电压 AC 500V 测试无损坏。）
5.4.6	Solderability （可焊性）	Immerse the solder pin of the connector in the solder bath at 245℃±5℃ for 5±0.5seconds. After dipped the pin in the flux for 5 seconds. （ANSI/EIA-364-52） （将端子脚浸入助焊剂中 5 秒，然后将端子脚浸入 245℃±5℃的锡炉中 5±0.5 秒.）	Solder wetting:95% of immersed area must show no voids，Pin holes. (粘锡面积：锡附着的面积应超过浸入表面积的 95%以上)

REVISION:	ECR/ECN INFORMATION:	TITLE:	SHEET No.
E	EC No: DATE: 2024 / 05/ 08	USB REC.CONNECTOR	4 of 5

DOCUMENT NUMBER:	CREATED / REVISED BY:	CHECKED BY:	APPROVED BY:
SP-USBXX-00-00	QIUYU	~	ROY

5.4.7	Resistance to soldering heat （耐焊接热）	1）Place the connector on the P.C.Board,then immerse the solder pin up to the surface of the board in the solder bath at 260℃±5℃ for 10 ±0.5seconds.（ANSI/EIA-364-52） (将连接器置于 PCB 上,然后将露出 PCB 板表面的 Pin 脚部分浸入 260±5℃的锡炉中 10 ±0.5 秒) 2）By soldering iron: Solder Temperature: 390±10℃	1）Without deformation of case or excessive lossen.(塑胶不得有明显变形或损坏) 2）Electrical characteristics shall be satisfied.(电气特性必须符合规格)
5.4.8	Vibration （振动）	Solder each of plug and receptacle connector to the P.C.Board,then mate them together.place the mated connector firmly on the vibrator and apply the following condition shall be done. Amplitude:1.5 mm P-P or 147m/s2 {15G} Vibration frequency:10Hz-55Hz-10Hz/minute. Direction:along three mutually perpendicular direction. Sweep time:two hours along each direction,a total six hours. Electrical load: DC 1mA current shall be flowed during the test. (ANSI/EIA-364-28) (将公母座各自焊接于 PCB 板上，然后将其对插再固定于振动机上，并施加下列条件) 振幅：1.5mm； 振动频率：一分钟内变换 10Hz-55Hz-10Hz； 方向：沿著三个互相垂直的方向； 时间：每个方向两小时，共 6 小时； 电力负载：施加 DC 1mA 电流测试。	1）No electrical discontinuity greater than 1 microsecond.shall occur. （电气上不能有超过 1 徼秒断讯的情形发生。） 2）Lossen,crack and breakage of the plastic part and other detrimental damage shall not be observed. （塑胶件不能有松脱破损或其它不利的损坏。） 3）Contact resistance: 30 mΩ Max. （接触阻抗最大 30 毫欧）

6 Hot air reflow or IR reflow for SMD curing process：（回流焊参考温度）：

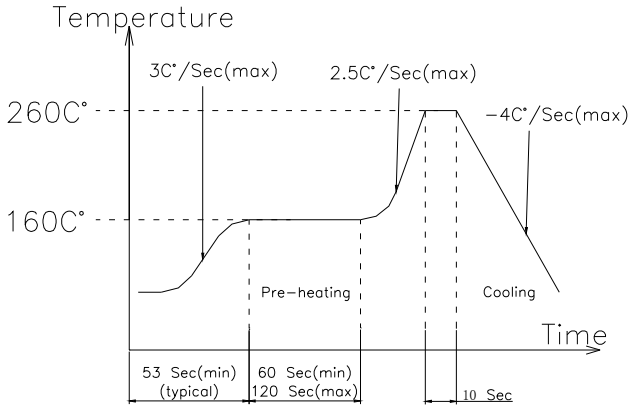

The recommended conditions
for the reflow temperature profile

Test Report

No.: SHAEC24013601919 **Date:** Jun 28, 2024

Client Name: KUNSHAN DELIKANG ELECTRONIC TECHNOLOGY CO., LTD

Client Address: NO. 278, HUANGPU JIANGNAN ROAD,DIANSHAN LAKE TOWN,KUNSHAN CITY,JIANGSU PROVINCE

Sample Name: Plastic

Model No.: PA9T BL HF

Supplier: KLL

The above sample(s) and information were provided by the client.

SGS Job No.: SHP24-019514

Sample Receiving Date: Jun 21, 2024

Testing Period: Jun 21, 2024 ~ Jun 28, 2024

Test Requested: Select test(s) as requested by the client.

Test Method(s): Please refer to next page(s).

Test Result(s): Please refer to next page(s).

Test Requirement	Conclusion
EU RoHS Directive (EU) 2015/863 amending Annex II to Directive 2011/65/EU - Lead, Mercury, Cadmium, Hexavalent chromium, Polybrominated biphenyls (PBB), Polybrominated diphenyl ethers (PBDE), Bis(2-ethylhexyl) phthalate (DEHP), Butyl benzyl phthalate (BBP), Dibutyl phthalate (DBP) and Diisobutyl phthalate (DIBP)	Pass
Halogen	See Results
Red Phosphorus	See Results

Signed for and on behalf of
SGS-CSTC Standards Technical Services (Shanghai) Co., Ltd.

Jenny Lan
Approved Signatory

scan to see the report
72211098

Unless otherwise agreed in writing, this document is issued by the Company subject to its General Conditions of Service printed overleaf, available on request or accessible at http://www.sgs.com/en/Terms-and-Conditions.aspx and, for electronic format documents, subject to Terms and Conditions for Electronic Documents at http://www.sgs.com/en/Terms-and-Conditions/Terms-e-Document.aspx. Attention is drawn to the limitation of liability, indemnification and jurisdiction issues defined therein. Any holder of this document is advised that information contained hereon reflects the Company's findings at the time of its intervention only and within the limits of Client's instructions, if any. The Company's sole responsibility is to its Client and this document does not exonerate parties to a transaction from exercising all their rights and obligations under the transaction documents. This document cannot be reproduced except in full, without prior written approval of the Company. Any unauthorized alteration, forgery or falsification of the content or appearance of this document is unlawful and offenders may be prosecuted to the fullest extent of the law. Unless otherwise stated the results shown in this test report refer only to the sample(s) tested.
Attention: To check the authenticity of testing /inspection report & certificate, please contact us at telephone: (86-755) 8307 1443, or email: CN.Doccheck@sgs.com

3rd Building,No.889 Yishan Road Xuhui District,Shanghai China 200233 t E&E (86-21) 61402553 f E&E (86-21)64953679 www.sgsgroup.com.cn
中国·上海·徐汇区宜山路889号3号楼 邮编: 200233 t HL (86-21) 61402594 f HL (86-21)61156899 e sgs.china@sgs.com

Test Result(s):

Test Part Description：

SN ID	Sample No.	SGS Sample ID	Description
SN1	A19	SHA24-0136019-0001.C019	Blue pellet

Remarks:

(1) 1 mg/kg = 1 ppm = 0.0001%
(2) MDL = Method Detection Limit
(3) ND = Not Detected (< MDL)
(4) "-" = Not Regulated

EU RoHS Directive (EU) 2015/863 amending Annex II to Directive 2011/65/EU - Lead, Mercury, Cadmium, Hexavalent chromium, Polybrominated biphenyls (PBB), Polybrominated diphenyl ethers (PBDE), Bis(2-ethylhexyl) phthalate (DEHP), Butyl benzyl phthalate (BBP), Dibutyl phthalate (DBP) and Diisobutyl phthalate (DIBP)

Test Method: With reference to IEC 62321-4:2013+AMD1:2017, IEC 62321-5:2013, IEC 62321-7-2:2017, IEC 62321-6:2015 and IEC 62321-8:2017, analysis was performed by ICP-OES/AAS, UV-Vis and GC-MS.

Test Item(s)	Limit	Unit(s)	MDL	A19
Lead (Pb)	1000	mg/kg	2	7
Mercury (Hg)	1000	mg/kg	2	ND
Cadmium (Cd)	100	mg/kg	2	ND
Hexavalent Chromium (Cr(VI))	1000	mg/kg	8	ND
Polybromobiphenyl (PBB)	1000	mg/kg	-	ND
Monobrominated biphenyl (MonoBB)	-	mg/kg	5	ND
Dibrominated biphenyl (DiBB)	-	mg/kg	5	ND
Tribrominated biphenyl (TriBB)	-	mg/kg	5	ND
Tetrabrominated biphenyl (TetraBB)	-	mg/kg	5	ND
Pentabrominated biphenyl (PentaBB)	-	mg/kg	5	ND
Hexabrominated biphenyl (HexaBB)	-	mg/kg	5	ND
Heptabrominated biphenyl (HeptaBB)	-	mg/kg	5	ND
Octabrominated biphenyl (OctaBB)	-	mg/kg	5	ND
Nonabrominated biphenyl (NonaBB)	-	mg/kg	5	ND
Decabrominated biphenyl (DecaBB)	-	mg/kg	5	ND
Polybromodiphenyl ether(PBDE)	1000	mg/kg	-	ND
Monobrominated diphenyl ether (MonoBDE)	-	mg/kg	5	ND
Dibrominated diphenyl ether (DiBDE)	-	mg/kg	5	ND
Tribrominated diphenyl ether (TriBDE)	-	mg/kg	5	ND
Tetrabrominated diphenyl ether (TetraBDE)	-	mg/kg	5	ND
Pentabrominated diphenyl ether (PentaBDE)	-	mg/kg	5	ND
Hexabrominated diphenyl ether (HexaBDE)	-	mg/kg	5	ND
Heptabrominated diphenyl ether (HeptaBDE)	-	mg/kg	5	ND

Unless otherwise agreed in writing, this document is issued by the Company subject to its General Conditions of Service printed overleaf, available on request or accessible at http://www.sgs.com/en/Terms-and-Conditions.aspx and, for electronic format documents, subject to Terms and Conditions for Electronic Documents at http://www.sgs.com/en/Terms-and-Conditions/Terms-e-Document.aspx. Attention is drawn to the limitation of liability, indemnification and jurisdiction issues defined therein. Any holder of this document is advised that information contained hereon reflects the Company's findings at the time of its intervention only and within the limits of Client's instructions, if any. The Company's sole responsibility is to its Client and this document does not exonerate parties to a transaction from exercising all their rights and obligations under the transaction documents. This document cannot be reproduced except in full, without prior written approval of the Company. Any unauthorized alteration, forgery or falsification of the content or appearance of this document is unlawful and offenders may be prosecuted to the fullest extent of the law. Unless otherwise stated the results shown in this test report refer only to the sample(s) tested .
Attention: To check the authenticity of testing /inspection report & certificate, please contact us at telephone: (86-755) 8307 1443, or email: CN.Doccheck@sgs.com

SGS-CSTC Standards Technical Services (Shanghai) Co., Ltd. Testing Center-Chemical Laboratory
3rd Building,No.889 Yishan Road Xuhui District,Shanghai China 200233 t E&E (86-21) 61402553 f E&E (86-21)64953679 www.sgsgroup.com.cn
中国·上海·徐汇区宜山路889号3号楼 邮编: 200233 t HL (86-21) 61402594 f HL (86-21)61156899 e sgs.china@sgs.com

Test Item(s)	Limit	Unit(s)	MDL	A19
Octabrominated diphenyl ether (OctaBDE)	-	mg/kg	5	ND
Nonabrominated diphenyl ether (NonaBDE)	-	mg/kg	5	ND
Decabrominated diphenyl ether (DecaBDE)	-	mg/kg	5	ND
Bis(2-ethylhexyl) phthalate (DEHP)	1000	mg/kg	50	ND
Butyl benzyl phthalate (BBP)	1000	mg/kg	50	ND
Dibutyl phthalate (DBP)	1000	mg/kg	50	ND
Diisobutyl phthalate (DIBP)	1000	mg/kg	50	ND

Notes:
(1) The maximum permissible limit is quoted from RoHS Directive (EU) 2015/863.
(2) IEC 62321 series is equivalent to EN 62321 series.
(3) The restriction of DEHP, BBP, DBP and DIBP shall apply to medical devices, including in vitro medical devices, and monitoring and control instruments, including industrial monitoring and control instruments, from 22 July 2021.

Halogen

Test Method: With reference to EN 14582:2016, analysis was performed by IC.

Test Item(s)	Unit(s)	MDL	A19
Fluorine(F)	mg/kg	20	967
Chlorine(Cl)	mg/kg	50	ND
Bromine(Br)	mg/kg	50	ND
Iodine(I)	mg/kg	50	ND

Red Phosphorus

Test Method: With reference to SGS In house method, analysis was performed by ICP-OES and Pyrolysis-GC-MS.

Test Item(s)	CAS No.	Unit(s)	MDL	A19
Red Phosphorus	7723-14-0	mg/kg	500	ND

Notes:
(1) The testing result is based on the worst-case scenario, and confirmed by Pyrolysis-GC-MS.

Unless otherwise stated, the decision rule for conformity reporting is based on Binary Statement for Simple Acceptance Rule (*w*=0) stated in ILAC-G8:09/2019.

SGS-CSTC Standards Technical Services (Shanghai) Co., Ltd. Testing Center-Chemical Laboratory

Unless otherwise agreed in writing, this document is issued by the Company subject to its General Conditions of Service printed overleaf, available on request or accessible at http://www.sgs.com/en/Terms-and-Conditions.aspx and, for electronic format documents, subject to Terms and Conditions for Electronic Documents at http://www.sgs.com/en/Terms-and-Conditions/Terms-e-Document.aspx. Attention is drawn to the limitation of liability, indemnification and jurisdiction issues defined therein. Any holder of this document is advised that information contained hereon reflects the Company's findings at the time of its intervention only and within the limits of Client's instructions, if any. The Company's sole responsibility is to its Client and this document does not exonerate parties to a transaction from exercising all their rights and obligations under the transaction documents. This document cannot be reproduced except in full, without prior written approval of the Company. Any unauthorized alteration, forgery or falsification of the content or appearance of this document is unlawful and offenders may be prosecuted to the fullest extent of the law. Unless otherwise stated the results shown in this test report refer only to the sample(s) tested .
Attention: To check the authenticity of testing /inspection report & certificate, please contact us at telephone: (86-755) 8307 1443, or email: CN.Doccheck@sgs.com

3rd Building,No.889 Yishan Road Xuhui District,Shanghai China 200233 t E&E (86–21) 61402553 f E&E (86–21)64953679 www.sgsgroup.com.cn
中国·上海·徐汇区宜山路889号3号楼 邮编: 200233 t HL (86–21) 61402594 f HL (86–21)61156899 e sgs.china@sgs.com

ATTACHMENTS

Elements Testing Flow Chart

These samples were dissolved totally by pre-conditioning method according to below flow chart.

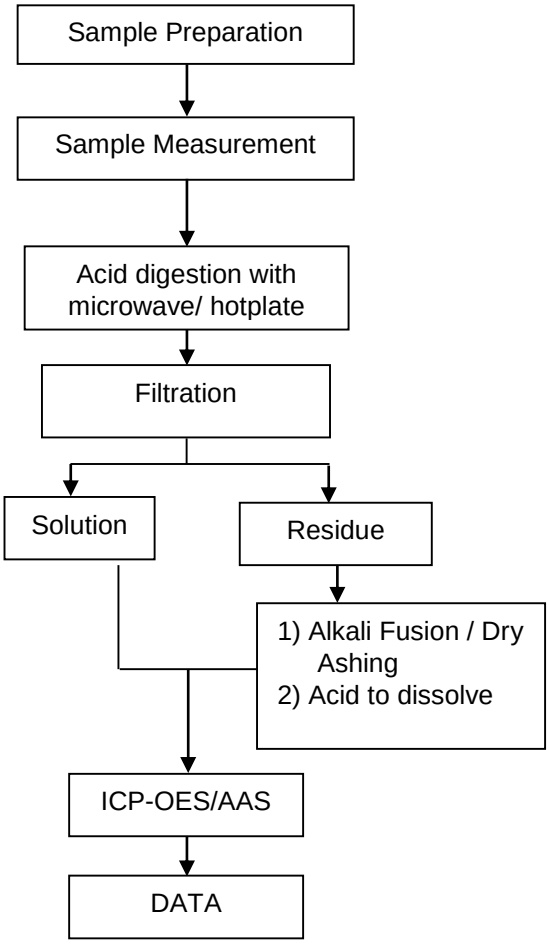

Unless otherwise agreed in writing, this document is issued by the Company subject to its General Conditions of Service printed overleaf, available on request or accessible at http://www.sgs.com/en/Terms-and-Conditions.aspx and, for electronic format documents, subject to Terms and Conditions for Electronic Documents at http://www.sgs.com/en/Terms-and-Conditions/Terms-e-Document.aspx. Attention is drawn to the limitation of liability, indemnification and jurisdiction issues defined therein. Any holder of this document is advised that information contained hereon reflects the Company's findings at the time of its intervention only and within the limits of Client's instructions, if any. The Company's sole responsibility is to its Client and this document does not exonerate parties to a transaction from exercising all their rights and obligations under the transaction documents. This document cannot be reproduced except in full, without prior written approval of the Company. Any unauthorized alteration, forgery or falsification of the content or appearance of this document is unlawful and offenders may be prosecuted to the fullest extent of the law. Unless otherwise stated the results shown in this test report refer only to the sample(s) tested .
Attention: To check the authenticity of testing /inspection report & certificate, please contact us at telephone: (86-755) 8307 1443, or email: CN.Doccheck@sgs.com

SGS-CSTC Standards Technical Services (Shanghai) Co., Ltd. Testing Center-Chemical Laboratory
3rd Building,No.889 Yishan Road Xuhui District,Shanghai China 200233 t E&E (86–21) 61402553 f E&E (86–21)64953679 www.sgsgroup.com.cn
中国·上海·徐汇区宜山路889号3号楼 邮编: 200233 t HL (86–21) 61402594 f HL (86–21)61156899 e sgs.china@sgs.com

Member of the SGS Group (SGS SA)

ATTACHMENTS

Hexavalent Chromium (Cr(VI)) Testing Flow Chart

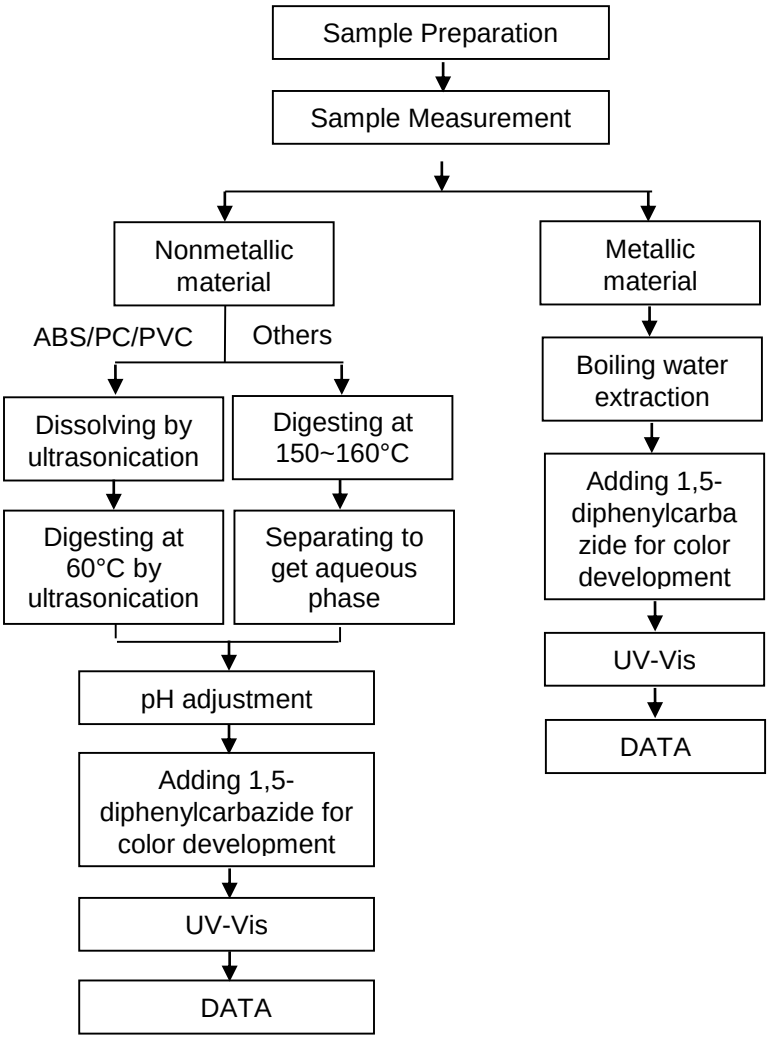

Unless otherwise agreed in writing, this document is issued by the Company subject to its General Conditions of Service printed overleaf, available on request or accessible at http://www.sgs.com/en/Terms-and-Conditions.aspx and, for electronic format documents, subject to Terms and Conditions for Electronic Documents at http://www.sgs.com/en/Terms-and-Conditions/Terms-e-Document.aspx. Attention is drawn to the limitation of liability, indemnification and jurisdiction issues defined therein. Any holder of this document is advised that information contained hereon reflects the Company's findings at the time of its intervention only and within the limits of Client's instructions, if any. The Company's sole responsibility is to its Client and this document does not exonerate parties to a transaction from exercising all their rights and obligations under the transaction documents. This document cannot be reproduced except in full, without prior written approval of the Company. Any unauthorized alteration, forgery or falsification of the content or appearance of this document is unlawful and offenders may be prosecuted to the fullest extent of the law. Unless otherwise stated the results shown in this test report refer only to the sample(s) tested .
Attention: To check the authenticity of testing /inspection report & certificate, please contact us at telephone: (86-755) 8307 1443, or email: CN.Doccheck@sgs.com
SGS-CSTC Standards Technical Services (Shanghai) Co., Ltd. Testing Center-Chemical Laboratory
3rd Building,No.889 Yishan Road Xuhui District,Shanghai China 200233 t E&E (86–21) 61402553 f E&E (86–21)64953679 www.sgsgroup.com.cn
中国·上海·徐汇区宜山路889号3号楼 邮编: 200233 t HL (86–21) 61402594 f HL (86–21)61156899 e sgs.china@sgs.com
Member of the SGS Group (SGS SA)

ATTACHMENTS

PBB/PBDE Testing Flow Chart

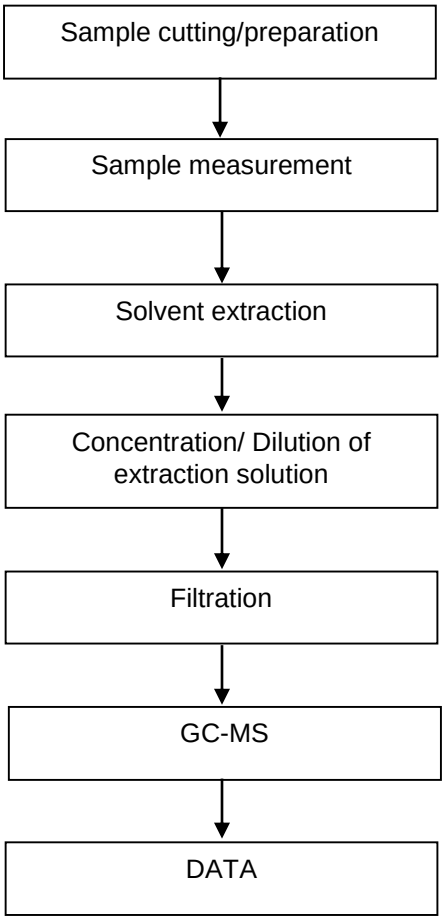

Unless otherwise agreed in writing, this document is issued by the Company subject to its General Conditions of Service printed overleaf, available on request or accessible at http://www.sgs.com/en/Terms-and-Conditions.aspx and, for electronic format documents, subject to Terms and Conditions for Electronic Documents at http://www.sgs.com/en/Terms-and-Conditions/Terms-e-Document.aspx. Attention is drawn to the limitation of liability, indemnification and jurisdiction issues defined therein. Any holder of this document is advised that information contained hereon reflects the Company's findings at the time of its intervention only and within the limits of Client's instructions, if any. The Company's sole responsibility is to its Client and this document does not exonerate parties to a transaction from exercising all their rights and obligations under the transaction documents. This document cannot be reproduced except in full, without prior written approval of the Company. Any unauthorized alteration, forgery or falsification of the content or appearance of this document is unlawful and offenders may be prosecuted to the fullest extent of the law. Unless otherwise stated the results shown in this test report refer only to the sample(s) tested .
Attention: To check the authenticity of testing /inspection report & certificate, please contact us at telephone: (86-755) 8307 1443, or email: CN.Doccheck@sgs.com
SGS-CSTC Standards Technical Services (Shanghai) Co.,Ltd. Testing Center-Chemical Laboratory
3rd Building,No.889 Yishan Road Xuhui District,Shanghai China 200233 t E&E (86–21) 61402553 f E&E (86–21)64953679 www.sgsgroup.com.cn
中国·上海·徐汇区宜山路889号3号楼 邮编: 200233 t HL (86–21) 61402594 f HL (86–21)61156899 e sgs.china@sgs.com
Member of the SGS Group (SGS SA)

ATTACHMENTS

Phthalates Testing Flow Chart

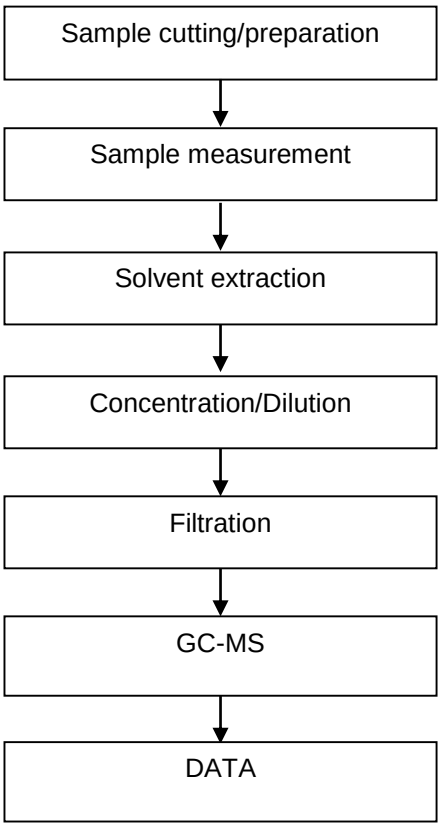

Unless otherwise agreed in writing, this document is issued by the Company subject to its General Conditions of Service printed overleaf, available on request or accessible at http://www.sgs.com/en/Terms-and-Conditions.aspx and, for electronic format documents, subject to Terms and Conditions for Electronic Documents at http://www.sgs.com/en/Terms-and-Conditions/Terms-e-Document.aspx. Attention is drawn to the limitation of liability, indemnification and jurisdiction issues defined therein. Any holder of this document is advised that information contained hereon reflects the Company's findings at the time of its intervention only and within the limits of Client's instructions, if any. The Company's sole responsibility is to its Client and this document does not exonerate parties to a transaction from exercising all their rights and obligations under the transaction documents. This document cannot be reproduced except in full, without prior written approval of the Company. Any unauthorized alteration, forgery or falsification of the content or appearance of this document is unlawful and offenders may be prosecuted to the fullest extent of the law. Unless otherwise stated the results shown in this test report refer only to the sample(s) tested .
Attention: To check the authenticity of testing /inspection report & certificate, please contact us at telephone: (86-755) 8307 1443, or email: CN.Doccheck@sgs.com

SGS-CSTC Standards Technical Services (Shanghai) Co.,Ltd. Testing Center-Chemical Laboratory
3rd Building,No.889 Yishan Road Xuhui District,Shanghai China 200233 t E&E (86–21) 61402553 f E&E (86–21)64953679 www.sgsgroup.com.cn
中国·上海·徐汇区宜山路889号3号楼 邮编: 200233 t HL (86–21) 61402594 f HL (86–21)61156899 e sgs.china@sgs.com

Member of the SGS Group (SGS SA)

ATTACHMENTS

Halogen Testing Flow Chart

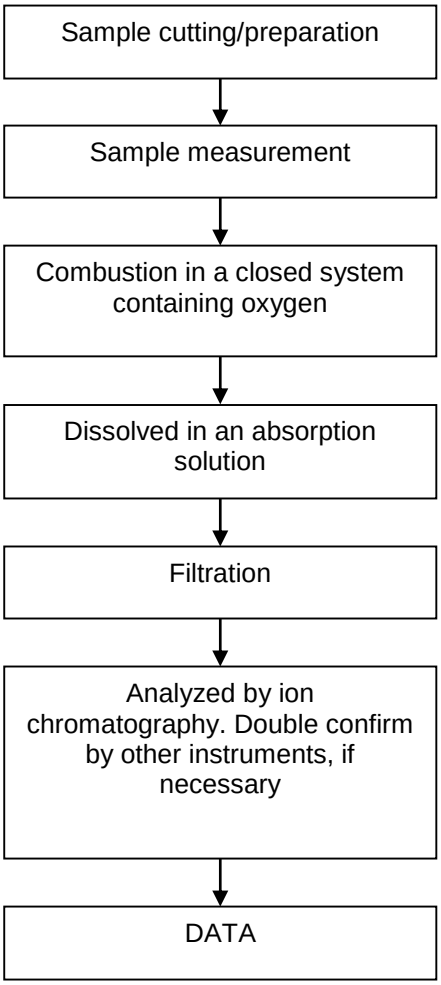

Unless otherwise agreed in writing, this document is issued by the Company subject to its General Conditions of Service printed overleaf, available on request or accessible at http://www.sgs.com/en/Terms-and-Conditions.aspx and, for electronic format documents, subject to Terms and Conditions for Electronic Documents at http://www.sgs.com/en/Terms-and-Conditions/Terms-e-Document.aspx. Attention is drawn to the limitation of liability, indemnification and jurisdiction issues defined therein. Any holder of this document is advised that information contained hereon reflects the Company's findings at the time of its intervention only and within the limits of Client's instructions, if any. The Company's sole responsibility is to its Client and this document does not exonerate parties to a transaction from exercising all their rights and obligations under the transaction documents. This document cannot be reproduced except in full, without prior written approval of the Company. Any unauthorized alteration, forgery or falsification of the content or appearance of this document is unlawful and offenders may be prosecuted to the fullest extent of the law. Unless otherwise stated the results shown in this test report refer only to the sample(s) tested .
Attention: To check the authenticity of testing /inspection report & certificate, please contact us at telephone: (86-755) 8307 1443, or email: CN.Doccheck@sgs.com

SGS-CSTC Standards Technical Services (Shanghai) Co., Ltd. Testing Center-Chemical Laboratory
3rd Building,No.889 Yishan Road Xuhui District,Shanghai China 200233 t E&E (86–21) 61402553 f E&E (86–21)64953679 www.sgsgroup.com.cn
中国·上海·徐汇区宜山路889号3号楼 邮编: 200233 t HL (86–21) 61402594 f HL (86–21)61156899 e sgs.china@sgs.com

Member of the SGS Group (SGS SA)

ATTACHMENTS

Red Phosphorus Testing Flow Chart

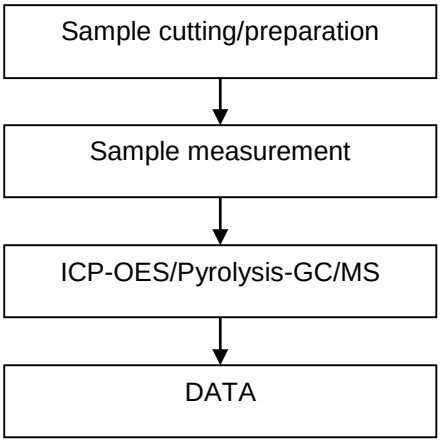

Unless otherwise agreed in writing, this document is issued by the Company subject to its General Conditions of Service printed overleaf, available on request or accessible at http://www.sgs.com/en/Terms-and-Conditions.aspx and, for electronic format documents, subject to Terms and Conditions for Electronic Documents at http://www.sgs.com/en/Terms-and-Conditions/Terms-e-Document.aspx. Attention is drawn to the limitation of liability, indemnification and jurisdiction issues defined therein. Any holder of this document is advised that information contained hereon reflects the Company's findings at the time of its intervention only and within the limits of Client's instructions, if any. The Company's sole responsibility is to its Client and this document does not exonerate parties to a transaction from exercising all their rights and obligations under the transaction documents. This document cannot be reproduced except in full, without prior written approval of the Company. Any unauthorized alteration, forgery or falsification of the content or appearance of this document is unlawful and offenders may be prosecuted to the fullest extent of the law. Unless otherwise stated the results shown in this test report refer only to the sample(s) tested .
Attention: To check the authenticity of testing /inspection report & certificate, please contact us at telephone: (86-755) 8307 1443, or email: CN.Doccheck@sgs.com
SGS-CSTC Standards Technical Services (Shanghai) Co.,Ltd. Testing Center-Chemical Laboratory
3rd Building,No.889 Yishan Road Xuhui District,Shanghai China 200233 t E&E (86–21) 61402553 f E&E (86–21)64953679 www.sgsgroup.com.cn
中国·上海·徐汇区宜山路889号3号楼 邮编: 200233 t HL (86–21) 61402594 f HL (86–21)61156899 e sgs.china@sgs.com
Member of the SGS Group (SGS SA)

Sample Photo:



SHA24-0136019-0001.C019

SGS authenticate the photo on original report only

*** End of Report ***

Unless otherwise agreed in writing, this document is issued by the Company subject to its General Conditions of Service printed overleaf, available on request or accessible at http://www.sgs.com/en/Terms-and-Conditions.aspx and, for electronic format documents, subject to Terms and Conditions for Electronic Documents at http://www.sgs.com/en/Terms-and-Conditions/Terms-e-Document.aspx. Attention is drawn to the limitation of liability, indemnification and jurisdiction issues defined therein. Any holder of this document is advised that information contained hereon reflects the Company's findings at the time of its intervention only and within the limits of Client's instructions, if any. The Company's sole responsibility is to its Client and this document does not exonerate parties to a transaction from exercising all their rights and obligations under the transaction documents. This document cannot be reproduced except in full, without prior written approval of the Company. Any unauthorized alteration, forgery or falsification of the content or appearance of this document is unlawful and offenders may be prosecuted to the fullest extent of the law. Unless otherwise stated the results shown in this test report refer only to the sample(s) tested .
Attention: To check the authenticity of testing /inspection report & certificate, please contact us at telephone: (86-755) 8307 1443, or email: CN.Doccheck@sgs.com

SGS-CSTC Standards Technical Services (Shanghai) Co., Ltd. Testing Center-Chemical Laboratory
3rd Building,No.889 Yishan Road Xuhui District,Shanghai China 200233 t E&E (86–21) 61402553 f E&E (86–21)64953679 www.sgsgroup.com.cn
中国·上海·徐汇区宜山路889号3号楼 邮编: 200233 t HL (86–21) 61402594 f HL (86–21)61156899 e sgs.china@sgs.com

Member of the SGS Group (SGS SA)

Test Report

No.: SHAEC24013601926 **Date:** Jun 28, 2024

Client Name: KUNSHAN DELIKANG ELECTRONIC TECHNOLOGY CO., LTD

Client Address: NO. 278, HUANGPU JIANGNAN ROAD,DIANSHAN LAKE TOWN,KUNSHAN CITY,JIANGSU PROVINCE

Sample Name: Plate

Model No.: SPCC

Supplier: HUAWEI

The above sample(s) and information were provided by the client.

SGS Job No.: SHP24-019514

Sample Receiving Date: Jun 21, 2024

Testing Period: Jun 21, 2024 ~ Jun 28, 2024

Test Requested: Select test(s) as requested by the client.

Test Method(s): Please refer to next page(s).

Test Result(s): Please refer to next page(s).

Test Requirement	Conclusion
EU RoHS Directive (EU) 2015/863 amending Annex II to Directive 2011/65/EU- Lead, Mercury, Cadmium and Hexavalent chromium	Pass

Signed for and on behalf of
SGS-CSTC Standards Technical Services (Shanghai) Co., Ltd.

Jenny Lan
Approved Signatory

scan to see the report
6F4688B9

Unless otherwise agreed in writing, this document is issued by the Company subject to its General Conditions of Service printed overleaf, available on request or accessible at http://www.sgs.com/en/Terms-and-Conditions.aspx and, for electronic format documents, subject to Terms and Conditions for Electronic Documents at http://www.sgs.com/en/Terms-and-Conditions/Terms-e-Document.aspx. Attention is drawn to the limitation of liability, indemnification and jurisdiction issues defined therein. Any holder of this document is advised that information contained hereon reflects the Company's findings at the time of its intervention only and within the limits of Client's instructions, if any. The Company's sole responsibility is to its Client and this document does not exonerate parties to a transaction from exercising all their rights and obligations under the transaction documents. This document cannot be reproduced except in full, without prior written approval of the Company. Any unauthorized alteration, forgery or falsification of the content or appearance of this document is unlawful and offenders may be prosecuted to the fullest extent of the law. Unless otherwise stated the results shown in this test report refer only to the sample(s) tested.
Attention: To check the authenticity of testing /inspection report & certificate, please contact us at telephone: (86-755) 8307 1443, or email: CN.Doccheck@sgs.com

3rd Building,No.889 Yishan Road Xuhui District,Shanghai China 200233 t E&E (86-21) 61402553 f E&E (86-21)64953679 www.sgsgroup.com.cn
中国·上海·徐汇区宜山路889号3号楼 邮编: 200233 t HL (86-21) 61402594 f HL (86-21)61156899 e sgs.china@sgs.com

Test Result(s):

Test Part Description：

SN ID	Sample No.	SGS Sample ID	Description
SN1	A26	SHA24-0136019-0001.C026	Silver metal

Remarks:

(1) 1 mg/kg = 1 ppm = 0.0001%
(2) MDL = Method Detection Limit
(3) ND = Not Detected (< MDL)
(4) "-" = Not Regulated

EU RoHS Directive (EU) 2015/863 amending Annex II to Directive 2011/65/EU- Lead, Mercury, Cadmium and Hexavalent chromium

Test Method: With reference to IEC 62321-4:2013+AMD1:2017, IEC 62321-5:2013 and IEC 62321-7-1:2015, analysis was performed by ICP-OES/AAS and UV-Vis.

Test Item(s)	Limit	Unit(s)	MDL	A26
Lead (Pb)	1000	mg/kg	2	ND
Mercury (Hg)	1000	mg/kg	2	ND
Cadmium (Cd)	100	mg/kg	2	ND
Hexavalent Chromium (Cr(VI))▼	-	μg/cm²	0.10	ND

Notes:

(1) The maximum permissible limit is quoted from RoHS Directive (EU) 2015/863.
(2) IEC 62321 series is equivalent to EN 62321 series.
(3) ▼ =
a. The sample is positive for Cr(VI) if the Cr(VI)concentration is greater than 0.13 μg/cm^2. The sample coating is considered to contain Cr(VI).
b. The sample is negative for Cr(VI) if Cr(VI) is ND (concentration less than 0.10 μg/cm^2). The coating is considered a non-Cr(VI) based coating.
c. The result between 0.10 μg/cm^2 and 0.13 μg/cm^2 is considered to be inconclusive-unavoidable coating variations may influence the determination.

Information on storage conditions and production date of the tested sample is unavailable and thus Cr(VI) results represent status of the sample at the time of testing.

Unless otherwise stated, the decision rule for conformity reporting is based on Binary Statement for Simple Acceptance Rule (*w*=0) stated in ILAC-G8:09/2019.

Unless otherwise agreed in writing, this document is issued by the Company subject to its General Conditions of Service printed overleaf, available on request or accessible at http://www.sgs.com/en/Terms-and-Conditions.aspx and, for electronic format documents, subject to Terms and Conditions for Electronic Documents at http://www.sgs.com/en/Terms-and-Conditions/Terms-e-Document.aspx. Attention is drawn to the limitation of liability, indemnification and jurisdiction issues defined therein. Any holder of this document is advised that information contained hereon reflects the Company's findings at the time of its intervention only and within the limits of Client's instructions, if any. The Company's sole responsibility is to its Client and this document does not exonerate parties to a transaction from exercising all their rights and obligations under the transaction documents. This document cannot be reproduced except in full, without prior written approval of the Company. Any unauthorized alteration, forgery or falsification of the content or appearance of this document is unlawful and offenders may be prosecuted to the fullest extent of the law. Unless otherwise stated the results shown in this test report refer only to the sample(s) tested .
Attention: To check the authenticity of testing /inspection report & certificate, please contact us at telephone: (86-755) 8307 1443, or email: CN.Doccheck@sgs.com

SGS-CSTC Standards Technical Services (Shanghai) Co., Ltd. Testing Center-Chemical Laboratory
3rd Building,No.889 Yishan Road Xuhui District,Shanghai China 200233 t E&E (86–21) 61402553 f E&E (86–21)64953679 www.sgsgroup.com.cn
中国·上海·徐汇区宜山路889号3号楼 邮编: 200233 t HL (86–21) 61402594 f HL (86–21)61156899 e sgs.china@sgs.com

ATTACHMENTS

Elements Testing Flow Chart

These samples were dissolved totally by pre-conditioning method according to below flow chart.

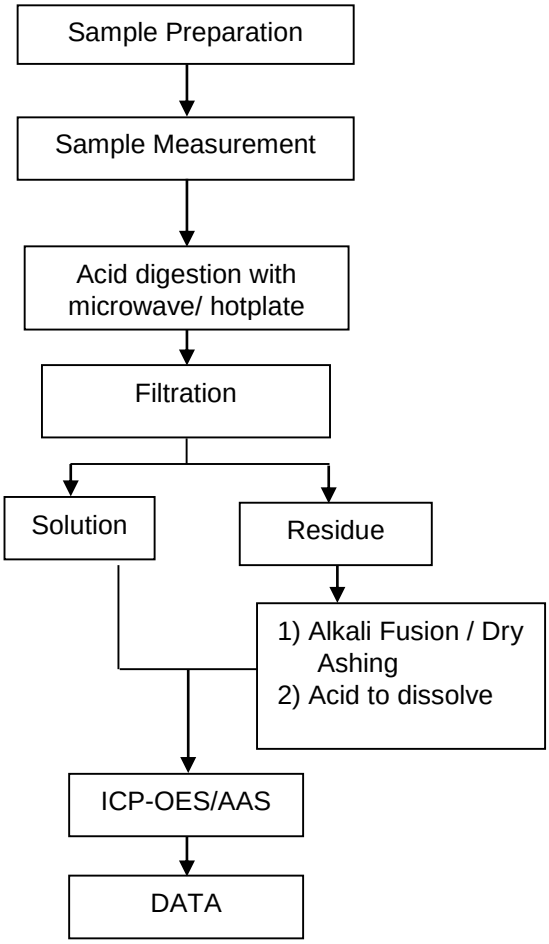

Unless otherwise agreed in writing, this document is issued by the Company subject to its General Conditions of Service printed overleaf, available on request or accessible at http://www.sgs.com/en/Terms-and-Conditions.aspx and, for electronic format documents, subject to Terms and Conditions for Electronic Documents at http://www.sgs.com/en/Terms-and-Conditions/Terms-e-Document.aspx. Attention is drawn to the limitation of liability, indemnification and jurisdiction issues defined therein. Any holder of this document is advised that information contained hereon reflects the Company's findings at the time of its intervention only and within the limits of Client's instructions, if any. The Company's sole responsibility is to its Client and this document does not exonerate parties to a transaction from exercising all their rights and obligations under the transaction documents. This document cannot be reproduced except in full, without prior written approval of the Company. Any unauthorized alteration, forgery or falsification of the content or appearance of this document is unlawful and offenders may be prosecuted to the fullest extent of the law. Unless otherwise stated the results shown in this test report refer only to the sample(s) tested .
Attention: To check the authenticity of testing /inspection report & certificate, please contact us at telephone: (86-755) 8307 1443, or email: CN.Doccheck@sgs.com

SGS-CSTC Standards Technical Services (Shanghai) Co., Ltd. Testing Center-Chemical Laboratory
3rd Building,No.889 Yishan Road Xuhui District,Shanghai China 200233 t E&E (86–21) 61402553 f E&E (86–21)64953679 www.sgsgroup.com.cn
中国·上海·徐汇区宜山路889号3号楼 邮编: 200233 t HL (86–21) 61402594 f HL (86–21)61156899 e sgs.china@sgs.com

Member of the SGS Group (SGS SA)

ATTACHMENTS

Hexavalent Chromium (Cr(VI)) Testing Flow Chart

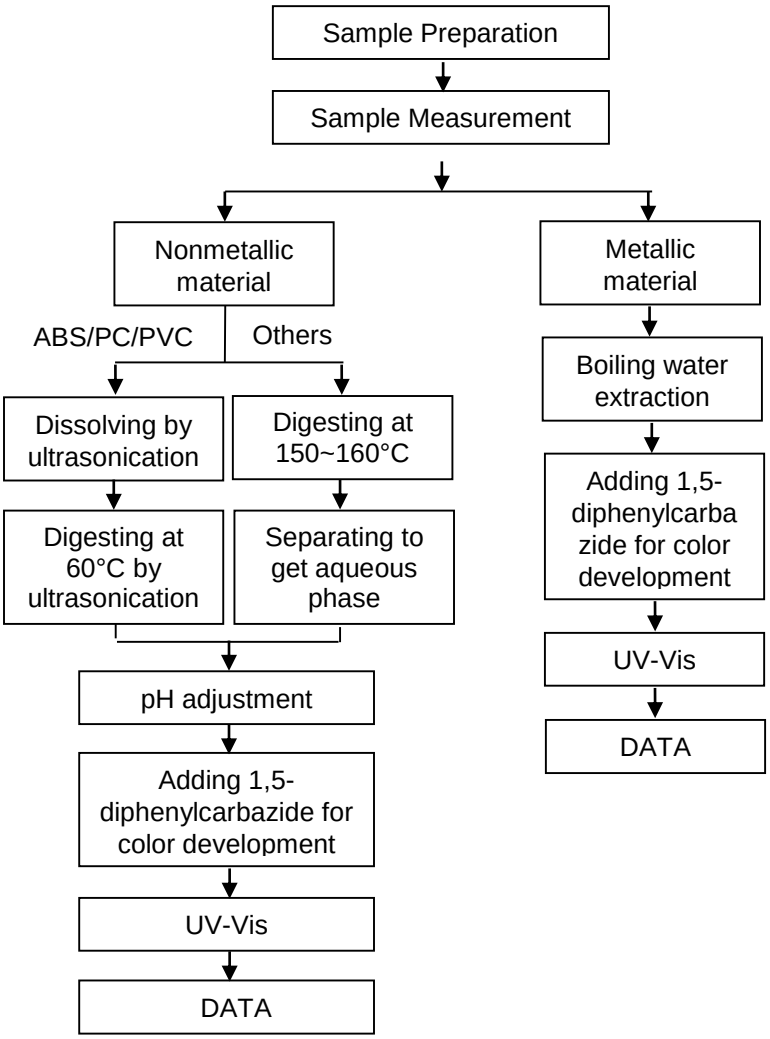

Unless otherwise agreed in writing, this document is issued by the Company subject to its General Conditions of Service printed overleaf, available on request or accessible at http://www.sgs.com/en/Terms-and-Conditions.aspx and, for electronic format documents, subject to Terms and Conditions for Electronic Documents at http://www.sgs.com/en/Terms-and-Conditions/Terms-e-Document.aspx. Attention is drawn to the limitation of liability, indemnification and jurisdiction issues defined therein. Any holder of this document is advised that information contained hereon reflects the Company's findings at the time of its intervention only and within the limits of Client's instructions, if any. The Company's sole responsibility is to its Client and this document does not exonerate parties to a transaction from exercising all their rights and obligations under the transaction documents. This document cannot be reproduced except in full, without prior written approval of the Company. Any unauthorized alteration, forgery or falsification of the content or appearance of this document is unlawful and offenders may be prosecuted to the fullest extent of the law. Unless otherwise stated the results shown in this test report refer only to the sample(s) tested .
Attention: To check the authenticity of testing /inspection report & certificate, please contact us at telephone: (86-755) 8307 1443, or email: CN.Doccheck@sgs.com
SGS-CSTC Standards Technical Services (Shanghai) Co., Ltd. Testing Center-Chemical Laboratory
3rd Building,No.889 Yishan Road Xuhui District,Shanghai China 200233 t E&E (86–21) 61402553 f E&E (86–21)64953679 www.sgsgroup.com.cn
中国·上海·徐汇区宜山路889号3号楼 邮编: 200233 t HL (86–21) 61402594 f HL (86–21)61156899 e sgs.china@sgs.com
Member of the SGS Group (SGS SA)

Sample Photo:



SHA24-0136019-0001.C026

SGS authenticate the photo on original report only

*** End of Report ***

Unless otherwise agreed in writing, this document is issued by the Company subject to its General Conditions of Service printed overleaf, available on request or accessible at http://www.sgs.com/en/Terms-and-Conditions.aspx and, for electronic format documents, subject to Terms and Conditions for Electronic Documents at http://www.sgs.com/en/Terms-and-Conditions/Terms-e-Document.aspx. Attention is drawn to the limitation of liability, indemnification and jurisdiction issues defined therein. Any holder of this document is advised that information contained hereon reflects the Company's findings at the time of its intervention only and within the limits of Client's instructions, if any. The Company's sole responsibility is to its Client and this document does not exonerate parties to a transaction from exercising all their rights and obligations under the transaction documents. This document cannot be reproduced except in full, without prior written approval of the Company. Any unauthorized alteration, forgery or falsification of the content or appearance of this document is unlawful and offenders may be prosecuted to the fullest extent of the law. Unless otherwise stated the results shown in this test report refer only to the sample(s) tested .
Attention: To check the authenticity of testing /inspection report & certificate, please contact us at telephone: (86-755) 8307 1443, or email: CN.Doccheck@sgs.com

SGS-CSTC Standards Technical Services (Shanghai) Co., Ltd. Testing Center-Chemical Laboratory
3rd Building,No.889 Yishan Road Xuhui District,Shanghai China 200233 t E&E (86–21) 61402553 f E&E (86–21)64953679 www.sgsgroup.com.cn
中国·上海·徐汇区宜山路889号3号楼 邮编: 200233 t HL (86–21) 61402594 f HL (86–21)61156899 e sgs.china@sgs.com

Member of the SGS Group (SGS SA)

Test Report

No.: CANEC24003157005 **Date:** Mar 01, 2024

Client Name: GUANGZHOU COPPER MATERIALS CO., LTD.

Client Address: NO.5 LONGDONG ROAD, HIGH-TECH INDUSTRIAL PARK, CONGHUA GUANGDONG ECONOMIC DEVELOPMENT ZONE, GUANGZHOU CITY, GUANGDONG PROVINCE, CHINA

Sample Name: C5191

The above sample(s) and information were provided by the client.

SGS Job No.: GZP24-004006

Sample Receiving Date: Feb 26, 2024

Testing Period: Feb 26, 2024 ~ Mar 01, 2024

Test Requested: Select test(s) as requested by the client.

Test Method(s): Please refer to next page(s).

Test Result(s): Please refer to next page(s).

Test Requirement	Conclusion
EU RoHS Directive (EU) 2015/863 amending Annex II to Directive 2011/65/EU - Lead, Mercury, Cadmium, Hexavalent chromium, Polybrominated biphenyls (PBB), Polybrominated diphenyl ethers (PBDE), Bis(2-ethylhexyl) phthalate (DEHP), Butyl benzyl phthalate (BBP), Dibutyl phthalate (DBP) and Diisobutyl phthalate (DIBP)	Pass

Signed for and on behalf of
SGS-CSTC Standards Technical Services Co., Ltd. Guangzhou Branch

Zm Guan
Approved Signatory

scan to see the report
F5721F0C

Unless otherwise agreed in writing, this document is issued by the Company subject to its General Conditions of Service printed overleaf, available on request or accessible at https://www.sgs.com/en/Terms-and-Conditions. Attention is drawn to the limitation of liability, indemnification and jurisdiction issues defined therein. Any holder of this document is advised that information contained hereon reflects the Company's findings at the time of its intervention only and within the limits of Client's instructions, if any. The Company's sole responsibility is to its Client and this document does not exonerate parties to a transaction from exercising all their rights and obligations under the transaction documents. This document cannot be reproduced except in full, without prior written approval of the Company. Any unauthorized alteration, forgery or falsification of the content or appearance of this document is unlawful and offenders may be prosecuted to the fullest extent of the law. Unless otherwise stated the results shown in this test report refer only to the sample(s) tested.
Attention: To check the authenticity of testing /inspection report & certificate, please contact us at telephone: (86-755) 8307 1443, or email: CN.Doccheck@sgs.com

SGS-CSTC Standards Technical Services Co., Ltd. Guangzhou Branch Technical Services Technical Laboratory
No.198, Kezhu Road, Science City, Economic & Technological Development Area, Guangzhou, Guangdong, China 510663
中国·广东·广州高新技术产业开发区科学城科珠路198号 邮编: 510663
t (86–20) 82155555 www.sgsgroup.com.cn
t (86–20) 82155555 sgs.china@sgs.com

Test Result(s):

Test Part Description：

SN ID	Sample No.	SGS Sample ID	Description
SN1	A3	CAN24-0031570-0001.C003	Copper-colored metal

Remarks:

(1) 1 mg/kg = 1 ppm = 0.0001%
(2) MDL = Method Detection Limit
(3) ND = Not Detected (< MDL)
(4) "-" = Not Regulated

EU RoHS Directive (EU) 2015/863 amending Annex II to Directive 2011/65/EU - Lead, Mercury, Cadmium, Hexavalent chromium, Polybrominated biphenyls (PBB), Polybrominated diphenyl ethers (PBDE), Bis(2-ethylhexyl) phthalate (DEHP), Butyl benzyl phthalate (BBP), Dibutyl phthalate (DBP) and Diisobutyl phthalate (DIBP)

Test Method: With reference to IEC 62321-4:2013+AMD1:2017, IEC 62321-5:2013, IEC 62321-7-1:2015, IEC 62321-6:2015 and IEC62321-8:2017, analysis was performed by ICP-OES/AAS, UV-Vis and GC-MS.

Test Item(s)	Limit	Unit(s)	MDL	A3
Lead (Pb)	1000	mg/kg	2	41
Mercury (Hg)	1000	mg/kg	2	ND
Cadmium (Cd)	100	mg/kg	2	ND
Hexavalent Chromium (Cr(VI))▼	-	µg/cm²	0.10	ND
Polybromobiphenyl (PBB)	1000	mg/kg	-	ND
Monobrominated biphenyl (MonoBB)	-	mg/kg	5	ND
Dibrominated biphenyl (DiBB)	-	mg/kg	5	ND
Tribrominated biphenyl (TriBB)	-	mg/kg	5	ND
Tetrabrominated biphenyl (TetraBB)	-	mg/kg	5	ND
Pentabrominated biphenyl (PentaBB)	-	mg/kg	5	ND
Hexabrominated biphenyl (HexaBB)	-	mg/kg	5	ND
Heptabrominated biphenyl (HeptaBB)	-	mg/kg	5	ND
Octabrominated biphenyl (OctaBB)	-	mg/kg	5	ND
Nonabrominated biphenyl (NonaBB)	-	mg/kg	5	ND
Decabrominated biphenyl (DecaBB)	-	mg/kg	5	ND
Polybromodiphenyl ether(PBDE)	1000	mg/kg	-	ND
Monobrominated diphenyl ether (MonoBDE)	-	mg/kg	5	ND
Dibrominated diphenyl ether (DiBDE)	-	mg/kg	5	ND
Tribrominated diphenyl ether (TriBDE)	-	mg/kg	5	ND
Tetrabrominated diphenyl ether (TetraBDE)	-	mg/kg	5	ND
Pentabrominated diphenyl ether (PentaBDE)	-	mg/kg	5	ND
Hexabrominated diphenyl ether (HexaBDE)	-	mg/kg	5	ND
Heptabrominated diphenyl ether (HeptaBDE)	-	mg/kg	5	ND

SGS-CSTC Standards Technical Services Co., Ltd. Guangzhou Branch Testing Center Chemical Laboratory
检验检测专用章 Inspection & Testing Services

Unless otherwise agreed in writing, this document is issued by the Company subject to its General Conditions of Service printed overleaf, available on request or accessible at https://www.sgs.com/en/Terms-and-Conditions. Attention is drawn to the limitation of liability, indemnification and jurisdiction issues defined therein. Any holder of this document is advised that information contained hereon reflects the Company's findings at the time of its intervention only and within the limits of Client's instructions, if any. The Company's sole responsibility is to its Client and this document does not exonerate parties to a transaction from exercising all their rights and obligations under the transaction documents. This document cannot be reproduced except in full, without prior written approval of the Company. Any unauthorized alteration, forgery or falsification of the content or appearance of this document is unlawful and offenders may be prosecuted to the fullest extent of the law. Unless otherwise stated the results shown in this test report refer only to the sample(s) tested.
Attention: To check the authenticity of testing /inspection report & certificate, please contact us at telephone: (86-755) 8307 1443, or email: CN.Doccheck@sgs.com

No.198, Kezhu Road, Science City, Economic & Technological Development Area, Guangzhou, Guangdong, China 510663 t (86–20) 82155555 www.sgsgroup.com.cn
中国·广东·广州高新技术产业开发区科学城科珠路198号 邮编: 510663 t (86–20) 82155555 sgs.china@sgs.com

Test Item(s)	Limit	Unit(s)	MDL	A3
Octabrominated diphenyl ether (OctaBDE)	-	mg/kg	5	ND
Nonabrominated diphenyl ether (NonaBDE)	-	mg/kg	5	ND
Decabrominated diphenyl ether (DecaBDE)	-	mg/kg	5	ND
Bis(2-ethylhexyl) phthalate (DEHP)	1000	mg/kg	50	ND
Butyl benzyl phthalate (BBP)	1000	mg/kg	50	ND
Dibutyl phthalate (DBP)	1000	mg/kg	50	ND
Diisobutyl phthalate (DIBP)	1000	mg/kg	50	ND

Notes:

(1) The maximum permissible limit is quoted from RoHS Directive (EU) 2015/863.

(2) IEC 62321 series is equivalent to EN 62321 series.

(3) ▼ =
a. The sample is positive for Cr(VI) if the Cr(VI)concentration is greater than 0.13 μg/cm^2. The sample coating is considered to contain Cr(VI).
b. The sample is negative for Cr(VI) if Cr(VI) is ND (concentration less than 0.10 μg/cm^2). The coating is considered a non-Cr(VI) based coating.
c. The result between 0.10 μg/cm^2 and 0.13 μg/cm^2 is considered to be inconclusive-unavoidable coating variations may influence the determination.

Information on storage conditions and production date of the tested sample is unavailable and thus Cr(VI) results represent status of the sample at the time of testing.

Unless otherwise stated, the decision rule for conformity reporting is based on Binary Statement for Simple Acceptance Rule (*w*=0) stated in ILAC-G8:09/2019.

SGS-CSTC Standards Technical Services Co., Ltd. Guangzhou Branch Testing Center / Chemical Laboratory.

Unless otherwise agreed in writing, this document is issued by the Company subject to its General Conditions of Service printed overleaf, available on request or accessible at https://www.sgs.com/en/Terms-and-Conditions. Attention is drawn to the limitation of liability, indemnification and jurisdiction issues defined therein. Any holder of this document is advised that information contained hereon reflects the Company's findings at the time of its intervention only and within the limits of Client's instructions, if any. The Company's sole responsibility is to its Client and this document does not exonerate parties to a transaction from exercising all their rights and obligations under the transaction documents. This document cannot be reproduced except in full, without prior written approval of the Company. Any unauthorized alteration, forgery or falsification of the content or appearance of this document is unlawful and offenders may be prosecuted to the fullest extent of the law. Unless otherwise stated the results shown in this test report refer only to the sample(s) tested.
Attention: To check the authenticity of testing /inspection report & certificate, please contact us at telephone: (86-755) 8307 1443, or email: CN.Doccheck@sgs.com

No.198, Kezhu Road, Science City, Economic & Technological Development Area, Guangzhou, Guangdong, China 510663 t (86–20) 82155555 www.sgsgroup.com.cn
中国・广东・广州高新技术产业开发区科学城科珠路198号 邮编: 510663 t (86–20) 82155555 sgs.china@sgs.com

ATTACHMENTS

Elements Testing Flow Chart

These samples were dissolved totally by pre-conditioning method according to below flow chart.

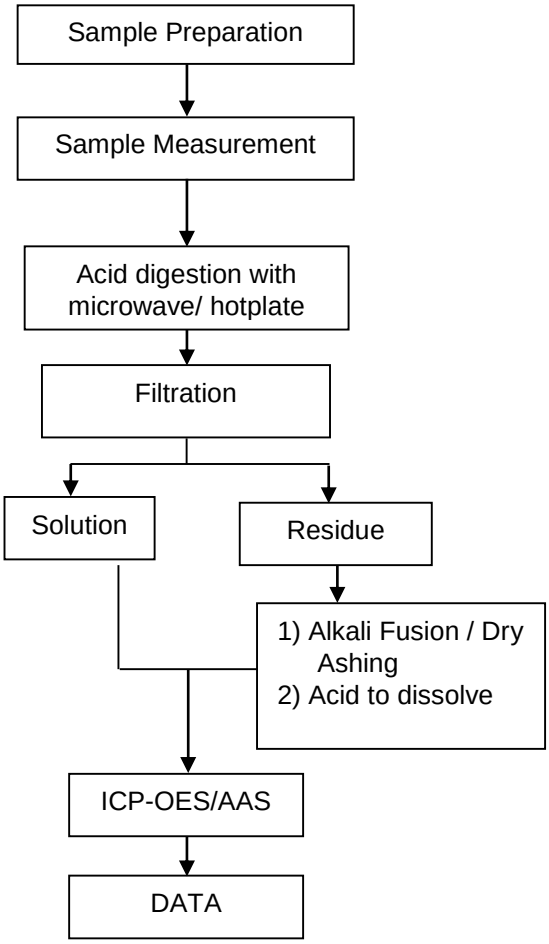

Unless otherwise agreed in writing, this document is issued by the Company subject to its General Conditions of Service printed overleaf, available on request or accessible at https://www.sgs.com/en/Terms-and-Conditions. Attention is drawn to the limitation of liability, indemnification and jurisdiction issues defined therein. Any holder of this document is advised that information contained hereon reflects the Company's findings at the time of its intervention only and within the limits of Client's instructions, if any. The Company's sole responsibility is to its Client and this document does not exonerate parties to a transaction from exercising all their rights and obligations under the transaction documents. This document cannot be reproduced except in full, without prior written approval of the Company. Any unauthorized alteration, forgery or falsification of the content or appearance of this document is unlawful and offenders may be prosecuted to the fullest extent of the law. Unless otherwise stated the results shown in this test report refer only to the sample(s) tested.
Attention: To check the authenticity of testing /inspection report & certificate, please contact us at telephone: (86-755) 8307 1443, or email: CN.Doccheck@sgs.com

SGS-CSTC Standards Technical Services Co., Ltd. Guangzhou Branch Testing Center / Chemical Laboratory
No.198, Kezhu Road, Science City, Economic & Technological Development Area, Guangzhou, Guangdong, China 510663 t (86–20) 82155555 www.sgsgroup.com.cn
中国・广东・广州高新技术产业开发区科学城科珠路198号 邮编: 510663 t (86–20) 82155555 sgs.china@sgs.com

ATTACHMENTS

Hexavalent Chromium (Cr(VI)) Testing Flow Chart

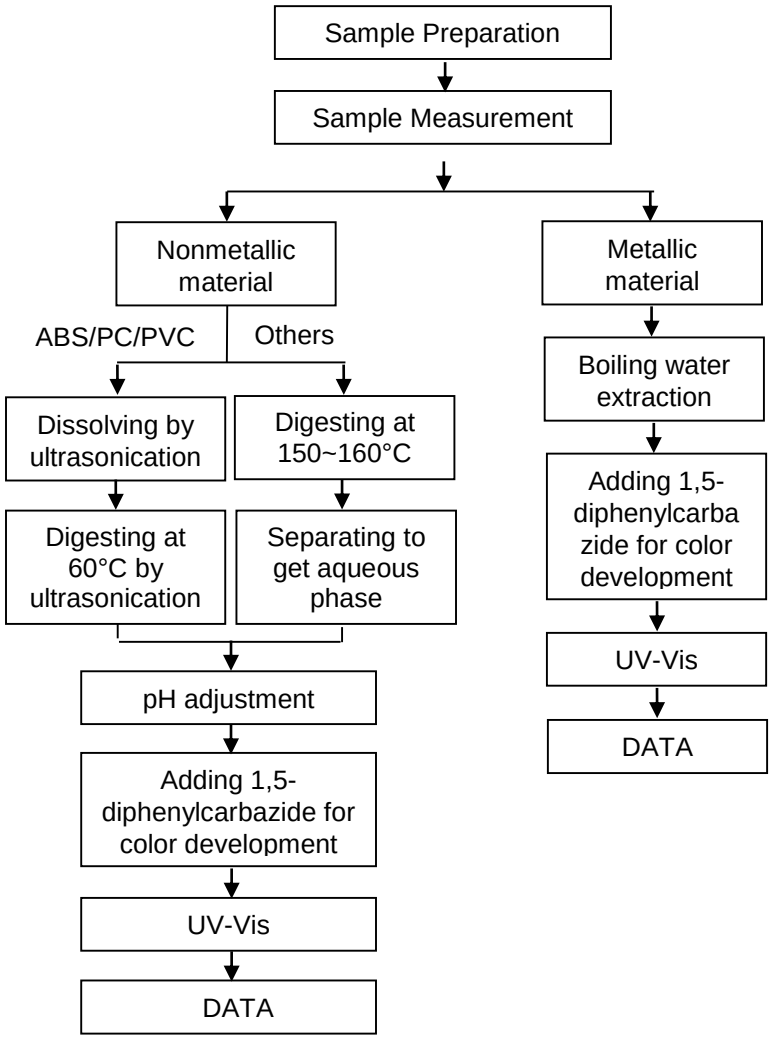

Unless otherwise agreed in writing, this document is issued by the Company subject to its General Conditions of Service printed overleaf, available on request or accessible at https://www.sgs.com/en/Terms-and-Conditions. Attention is drawn to the limitation of liability, indemnification and jurisdiction issues defined therein. Any holder of this document is advised that information contained hereon reflects the Company's findings at the time of its intervention only and within the limits of Client's instructions, if any. The Company's sole responsibility is to its Client and this document does not exonerate parties to a transaction from exercising all their rights and obligations under the transaction documents. This document cannot be reproduced except in full, without prior written approval of the Company. Any unauthorized alteration, forgery or falsification of the content or appearance of this document is unlawful and offenders may be prosecuted to the fullest extent of the law. Unless otherwise stated the results shown in this test report refer only to the sample(s) tested.
Attention: To check the authenticity of testing /inspection report & certificate, please contact us at telephone: (86-755) 8307 1443, or email: CN.Doccheck@sgs.com

SGS-CSTC Standards Technical Services Co., Ltd. Guangzhou Branch Testing Center
No.198, Kezhu Road, Science City, Economic & Technological Development Area, Guangzhou, Guangdong, China 510663
中国·广东·广州高新技术产业开发区科学城科珠路198号 邮编: 510663
t (86-20) 82155555 www.sgsgroup.com.cn
t (86-20) 82155555 sgs.china@sgs.com

ATTACHMENTS

PBB/PBDE Testing Flow Chart

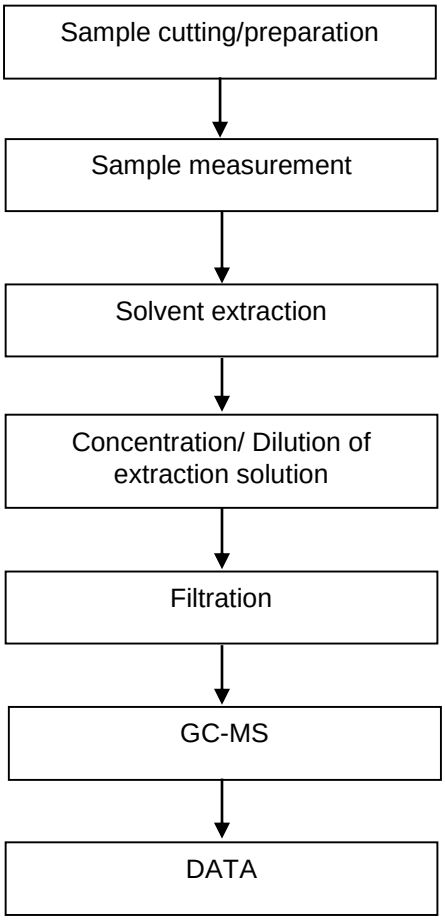

Unless otherwise agreed in writing, this document is issued by the Company subject to its General Conditions of Service printed overleaf, available on request or accessible at https://www.sgs.com/en/Terms-and-Conditions. Attention is drawn to the limitation of liability, indemnification and jurisdiction issues defined therein. Any holder of this document is advised that information contained hereon reflects the Company's findings at the time of its intervention only and within the limits of Client's instructions, if any. The Company's sole responsibility is to its Client and this document does not exonerate parties to a transaction from exercising all their rights and obligations under the transaction documents. This document cannot be reproduced except in full, without prior written approval of the Company. Any unauthorized alteration, forgery or falsification of the content or appearance of this document is unlawful and offenders may be prosecuted to the fullest extent of the law. Unless otherwise stated the results shown in this test report refer only to the sample(s) tested.
Attention: To check the authenticity of testing /inspection report & certificate, please contact us at telephone: (86-755) 8307 1443, or email: CN.Doccheck@sgs.com

SGS-CSTC Standards Technical Services Co., Ltd. Guangzhou Branch Testing Center / Chemical Laboratory.
No.198, Kezhu Road, Science City, Economic & Technological Development Area, Guangzhou, Guangdong, China 510663 t (86–20) 82155555 www.sgsgroup.com.cn
中国·广东·广州高新技术产业开发区科学城科珠路198号 邮编: 510663 t (86–20) 82155555 sgs.china@sgs.com
Member of the SGS Group (SGS SA)

ATTACHMENTS

Phthalates Testing Flow Chart

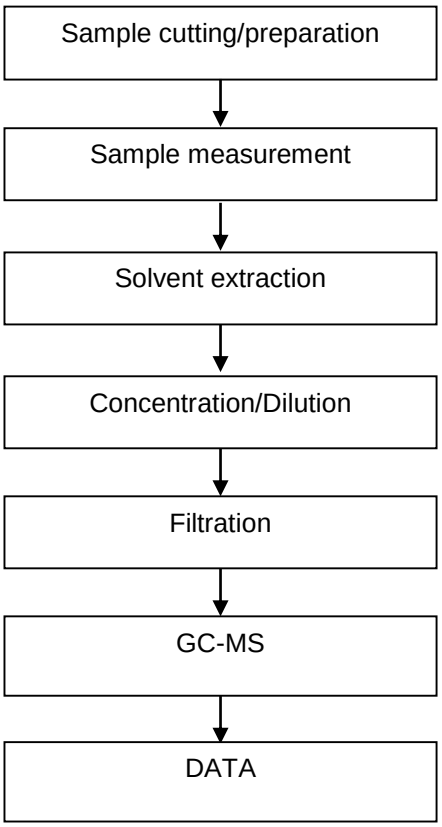

Unless otherwise agreed in writing, this document is issued by the Company subject to its General Conditions of Service printed overleaf, available on request or accessible at https://www.sgs.com/en/Terms-and-Conditions. Attention is drawn to the limitation of liability, indemnification and jurisdiction issues defined therein. Any holder of this document is advised that information contained hereon reflects the Company's findings at the time of its intervention only and within the limits of Client's instructions, if any. The Company's sole responsibility is to its Client and this document does not exonerate parties to a transaction from exercising all their rights and obligations under the transaction documents. This document cannot be reproduced except in full, without prior written approval of the Company. Any unauthorized alteration, forgery or falsification of the content or appearance of this document is unlawful and offenders may be prosecuted to the fullest extent of the law. Unless otherwise stated the results shown in this test report refer only to the sample(s) tested.
Attention: To check the authenticity of testing /inspection report & certificate, please contact us at telephone: (86-755) 8307 1443, or email: CN.Doccheck@sgs.com

SGS-CSTC Standards Technical Services Co., Ltd. Guangzhou Branch Testing Center / Chemical Laboratory.
No.198, Kezhu Road, Science City, Economic & Technological Development Area, Guangzhou, Guangdong, China 510663 t (86–20) 82155555 www.sgsgroup.com.cn
中国·广东·广州高新技术产业开发区科学城科珠路198号 邮编: 510663 t (86–20) 82155555 sgs.china@sgs.com
Member of the SGS Group (SGS SA)

Sample Photo:

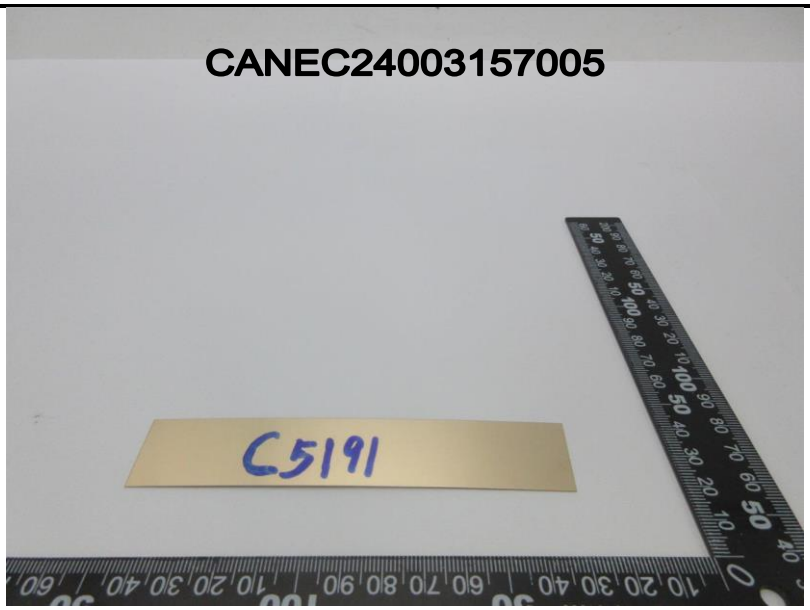

CAN24-0031570-0001.C003

SGS authenticate the photo on original report only

*** End of Report ***

SGS-CSTC Standards Technical Services Co., Ltd. Guangzhou Branch Testing Center / Chemical Laboratory.

检验检测专用章 Inspection & Testing Services

Unless otherwise agreed in writing, this document is issued by the Company subject to its General Conditions of Service printed overleaf, available on request or accessible at https://www.sgs.com/en/Terms-and-Conditions. Attention is drawn to the limitation of liability, indemnification and jurisdiction issues defined therein. Any holder of this document is advised that information contained hereon reflects the Company's findings at the time of its intervention only and within the limits of Client's instructions, if any. The Company's sole responsibility is to its Client and this document does not exonerate parties to a transaction from exercising all their rights and obligations under the transaction documents. This document cannot be reproduced except in full, without prior written approval of the Company. Any unauthorized alteration, forgery or falsification of the content or appearance of this document is unlawful and offenders may be prosecuted to the fullest extent of the law. Unless otherwise stated the results shown in this test report refer only to the sample(s) tested.
Attention: To check the authenticity of testing /inspection report & certificate, please contact us at telephone: (86-755) 8307 1443, or email: CN.Doccheck@sgs.com

No.198, Kezhu Road, Science City, Economic & Technological Development Area, Guangzhou, Guangdong, China 510663 t (86–20) 82155555 www.sgsgroup.com.cn
中国・广东・广州高新技术产业开发区科学城科珠路198号 邮编: 510663 t (86–20) 82155555 sgs.china@sgs.com

Member of the SGS Group (SGS SA)

检测报告

编号：CANEC24003157014 **日期：**2024 年 03 月 01 日

客户名称： 广州铜材厂有限公司

客户地址： 中国广东省广州市从化广东经济开发区高技术产业园龙洞路 5 号

样品名称： C2680

以上样品及信息由客户提供。

SGS 工作编号： GZP24-004006

样品接收时间： 2024 年 02 月 26 日

检测周期： 2024 年 02 月 26 日 ~ 2024 年 03 月 01 日

检测要求： 根据客户要求检测

检测方法： 见后续页。

检测结果： 见后续页。

检测要求	结论
欧盟 RoHS 指令 2011/65/EU 附录 II 的修正指令(EU) 2015/863-铅、汞、镉、六价铬、多溴联苯 (PBB)、多溴二苯醚 (PBDE)、邻苯二甲酸二(2-乙基已基)酯 (DEHP)、邻苯二甲酸丁苄酯 (BBP)、邻苯二甲酸二丁酯 (DBP)和邻苯二甲酸二异丁酯 (DIBP)	符合

通标标准技术服务有限公司广州分公司
授权签名

Zm Guan 关正孟
批准签署人

scan to see the report
6CE81D8C

Unless otherwise agreed in writing, this document is issued by the Company subject to its General Conditions of Service printed overleaf, available on request or accessible at https://www.sgs.com/en/Terms-and-Conditions. Attention is drawn to the limitation of liability, indemnification and jurisdiction issues defined therein. Any holder of this document is advised that information contained hereon reflects the Company's findings at the time of its intervention only and within the limits of Client's instructions, if any. The Company's sole responsibility is to its Client and this document does not exonerate parties to a transaction from exercising all their rights and obligations under the transaction documents. This document cannot be reproduced except in full, without prior written approval of the Company. Any unauthorized alteration, forgery or falsification of the content or appearance of this document is unlawful and offenders may be prosecuted to the fullest extent of the law. Unless otherwise stated the results shown in this test report refer only to the sample(s) tested.
Attention: To check the authenticity of testing /inspection report & certificate, please contact us at telephone: (86-755) 8307 1443, or email: CN.Doccheck@sgs.com

SGS-CSTC Standards Technical Services Co., Ltd. Guangzhou Branch Technical Service Chemical Laboratory.
No.198, Kezhu Road, Science City, Economic & Technological Development Area, Guangzhou, Guangdong, China 510663 t (86-20) 82155555 www.sgsgroup.com.cn
中国 • 广东 • 广州高新技术产业开发区科学城科珠路198号 邮编: 510663 t (86-20) 82155555 sgs.china@sgs.com
Member of the SGS Group (SGS SA)

检测结果：

检测部件外观描述:

样品序号	样品编号	SGS 样品 ID	样品描述
SN1	A7	CAN24-0031570-0001.C007	黄铜色金属

备注：

(1) 1 mg/kg = 1 ppm = 0.0001%
(2) MDL= 方法检测限
(3) ND = 未检出(< MDL)
(4) "-" = 未规定

欧盟 RoHS 指令 2011/65/EU 附录 II 的修正指令(EU) 2015/863-铅、汞、镉、六价铬、多溴联苯 (PBB)、多溴二苯醚 (PBDE)、邻苯二甲酸二(2-乙基已基)酯 (DEHP)、邻苯二甲酸丁苄酯 (BBP)、邻苯二甲酸二丁酯 (DBP)和邻苯二甲酸二异丁酯 (DIBP)

检测方法： 参考 IEC 62321-4:2013+AMD1:2017，IEC 62321-5:2013，IEC 62321-7-1:2015，IEC 62321-6:2015 和 IEC 62321-8:2017，采用 ICP-OES/AAS，UV-Vis 和 GC-MS 进行分析。

检测项目	限值	单位	MDL	A7
铅 (Pb)	1000	mg/kg	2	38
汞 (Hg)	1000	mg/kg	2	ND
镉 (Cd)	100	mg/kg	2	ND
六价铬 (Cr(VI))▼	-	μg/cm²	0.10	ND
多溴联苯之和 (PBB)	1000	mg/kg	-	ND
一溴联苯 (MonoBB)	-	mg/kg	5	ND
二溴联苯 (DiBB)	-	mg/kg	5	ND
三溴联苯 (TriBB)	-	mg/kg	5	ND
四溴联苯 (TetraBB)	-	mg/kg	5	ND
五溴联苯 (PentaBB)	-	mg/kg	5	ND
六溴联苯 (HexaBB)	-	mg/kg	5	ND
七溴联苯 (HeptaBB)	-	mg/kg	5	ND
八溴联苯 (OctaBB)	-	mg/kg	5	ND
九溴联苯 (NonaBB)	-	mg/kg	5	ND
十溴联苯 (DecaBB)	-	mg/kg	5	ND
多溴二苯醚之和 (PBDE)	1000	mg/kg	-	ND
一溴二苯醚 (MonoBDE)	-	mg/kg	5	ND
二溴二苯醚 (DiBDE)	-	mg/kg	5	ND
三溴二苯醚 (TriBDE)	-	mg/kg	5	ND
四溴二苯醚 (TetraBDE)	-	mg/kg	5	ND
五溴二苯醚 (PentaBDE)	-	mg/kg	5	ND
六溴二苯醚 (HexaBDE)	-	mg/kg	5	ND
七溴二苯醚 (HeptaBDE)	-	mg/kg	5	ND
八溴二苯醚 (OctaBDE)	-	mg/kg	5	ND

检验检测专用章 Inspection & Testing Services
SGS-CSTC Standards Technical Services Co., Ltd. Guangzhou Branch Technical Services Chemical Laboratory

Unless otherwise agreed in writing, this document is issued by the Company subject to its General Conditions of Service printed overleaf, available on request or accessible at https://www.sgs.com/en/Terms-and-Conditions. Attention is drawn to the limitation of liability, indemnification and jurisdiction issues defined therein. Any holder of this document is advised that information contained hereon reflects the Company's findings at the time of its intervention only and within the limits of Client's instructions, if any. The Company's sole responsibility is to its Client and this document does not exonerate parties to a transaction from exercising all their rights and obligations under the transaction documents. This document cannot be reproduced except in full, without prior written approval of the Company. Any unauthorized alteration, forgery or falsification of the content or appearance of this document is unlawful and offenders may be prosecuted to the fullest extent of the law. Unless otherwise stated the results shown in this test report refer only to the sample(s) tested.
Attention: To check the authenticity of testing /inspection report & certificate, please contact us at telephone: (86-755) 8307 1443, or email: CN.Doccheck@sgs.com

No.198, Kezhu Road, Science City, Economic & Technological Development Area, Guangzhou, Guangdong, China 510663 t (86–20) 82155555 www.sgsgroup.com.cn
中国 · 广东 · 广州高新技术产业开发区科学城科珠路198号 邮编: 510663 t (86–20) 82155555 sgs.china@sgs.com

Member of the SGS Group (SGS SA)

检测项目	限值	单位	MDL	A7
九溴二苯醚 (NonaBDE)	-	mg/kg	5	ND
十溴二苯醚 (DecaBDE)	-	mg/kg	5	ND
邻苯二甲酸二(2-乙基己基)酯 (DEHP)	1000	mg/kg	50	ND
邻苯二甲酸丁苄酯 (BBP)	1000	mg/kg	50	ND
邻苯二甲酸二丁酯 (DBP)	1000	mg/kg	50	ND
邻苯二甲酸二异丁酯 (DIBP)	1000	mg/kg	50	ND

备注：

(1) 最大允许极限值引用自RoHS指令(EU) 2015/863。

(2) IEC 62321系列等同于 EN 62321系列。

(3) ▼ = a. 当六价铬的浓度高于0.13 μg/cm²时，样品为阳性，即含有六价铬；

b. 当六价铬的浓度为ND (低于0.10 μg/cm²) 时，样品为阴性，即未检测到六价铬；

c. 当六价铬的浓度介于0.10 μg/cm²与0.13 μg/cm²之间时，无法直接判定是否检测到六价铬，因不同个体的样品表面差异可能会影响测定结果。

由于未获知样品的存储条件和生产日期，样品的六价铬检测结果仅能代表检测时样品含六价铬的状态。

除非另有说明，参照 ILAC-G8:09/2019，使用简单接受（*w*=0）的二元判定规则进行符合性判定。

除非另有说明，此报告结果仅对检测的样品负责。本报告未经本公司书面许可，不可部分复制。

检测报告仅用于客户科研、教学、内部质量控制、产品研发等目的，仅供内部参考。

检验检测专用章 Inspection & Testing Services
SGS-CSTC Standards Technical Services Co., Ltd. Guangzhou Branch Technical Services Chemical Laboratory

Unless otherwise agreed in writing, this document is issued by the Company subject to its General Conditions of Service printed overleaf, available on request or accessible at https://www.sgs.com/en/Terms-and-Conditions. Attention is drawn to the limitation of liability, indemnification and jurisdiction issues defined therein. Any holder of this document is advised that information contained hereon reflects the Company's findings at the time of its intervention only and within the limits of Client's instructions, if any. The Company's sole responsibility is to its Client and this document does not exonerate parties to a transaction from exercising all their rights and obligations under the transaction documents. This document cannot be reproduced except in full, without prior written approval of the Company. Any unauthorized alteration, forgery or falsification of the content or appearance of this document is unlawful and offenders may be prosecuted to the fullest extent of the law. Unless otherwise stated the results shown in this test report refer only to the sample(s) tested.
Attention: To check the authenticity of testing /inspection report & certificate, please contact us at telephone: (86-755) 8307 1443, or email: CN.Doccheck@sgs.com

No.198, Kezhu Road, Science City, Economic & Technological Development Area, Guangzhou, Guangdong, China 510663 t (86–20) 82155555 www.sgsgroup.com.cn
中国 · 广东 · 广州高新技术产业开发区科学城科珠路198号 邮编: 510663 t (86–20) 82155555 sgs.china@sgs.com

Member of the SGS Group (SGS SA)

附件

元素检测流程图

样品按照下述流程被完全消解

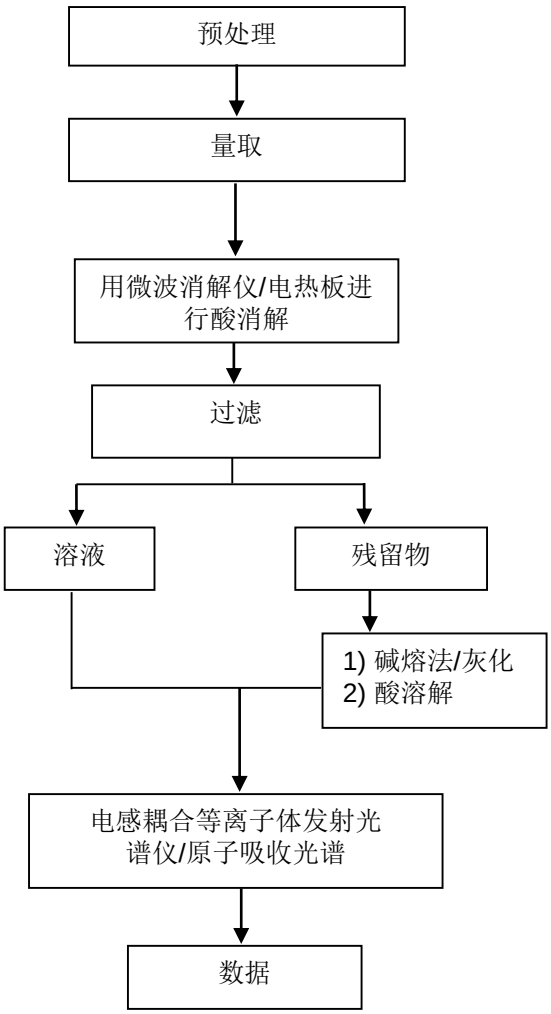

检验检测专用章 Inspection & Testing Services
SGS-CSTC Standards Technical Services Co., Ltd. Guangzhou Branch Technical Services Co., Ltd. Chemical Laboratory.

Unless otherwise agreed in writing, this document is issued by the Company subject to its General Conditions of Service printed overleaf, available on request or accessible at https://www.sgs.com/en/Terms-and-Conditions. Attention is drawn to the limitation of liability, indemnification and jurisdiction issues defined therein. Any holder of this document is advised that information contained hereon reflects the Company's findings at the time of its intervention only and within the limits of Client's instructions, if any. The Company's sole responsibility is to its Client and this document does not exonerate parties to a transaction from exercising all their rights and obligations under the transaction documents. This document cannot be reproduced except in full, without prior written approval of the Company. Any unauthorized alteration, forgery or falsification of the content or appearance of this document is unlawful and offenders may be prosecuted to the fullest extent of the law. Unless otherwise stated the results shown in this test report refer only to the sample(s) tested.
Attention: To check the authenticity of testing /inspection report & certificate, please contact us at telephone: (86-755) 8307 1443, or email: CN.Doccheck@sgs.com

No.198, Kezhu Road, Science City, Economic & Technological Development Area, Guangzhou, Guangdong, China 510663 t (86–20) 82155555 www.sgsgroup.com.cn
中国·广东·广州高新技术产业开发区科学城科珠路198号 邮编: 510663 t (86–20) 82155555 sgs.china@sgs.com

Member of the SGS Group (SGS SA)

附件

六价铬检测流程图

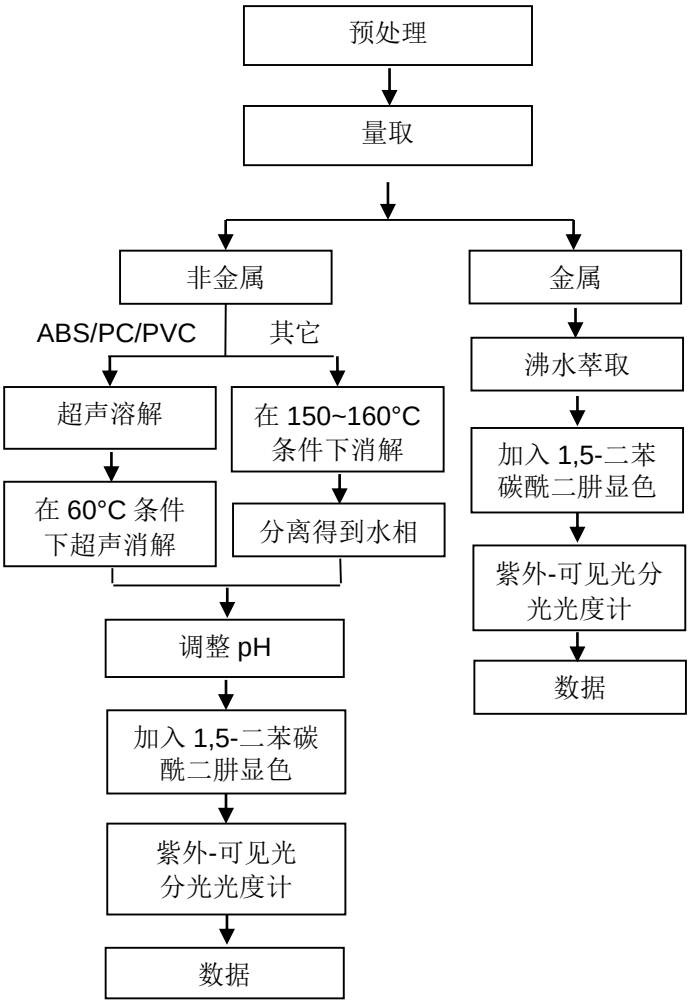

Unless otherwise agreed in writing, this document is issued by the Company subject to its General Conditions of Service printed overleaf, available on request or accessible at https://www.sgs.com/en/Terms-and-Conditions. Attention is drawn to the limitation of liability, indemnification and jurisdiction issues defined therein. Any holder of this document is advised that information contained hereon reflects the Company's findings at the time of its intervention only and within the limits of Client's instructions, if any. The Company's sole responsibility is to its Client and this document does not exonerate parties to a transaction from exercising all their rights and obligations under the transaction documents. This document cannot be reproduced except in full, without prior written approval of the Company. Any unauthorized alteration, forgery or falsification of the content or appearance of this document is unlawful and offenders may be prosecuted to the fullest extent of the law. Unless otherwise stated the results shown in this test report refer only to the sample(s) tested.
Attention: To check the authenticity of testing /inspection report & certificate, please contact us at telephone: (86-755) 8307 1443, or email: CN.Doccheck@sgs.com
SGS-CSTC Standards Technical Services Co., Ltd. Guangzhou Branch Testing Center / Chemical Laboratory
No.198, Kezhu Road, Science City, Economic & Technological Development Area, Guangzhou, Guangdong, China 510663 t (86-20) 82155555 www.sgsgroup.com.cn
中国·广东·广州高新技术产业开发区科学城科珠路198号 邮编: 510663 t (86-20) 82155555 sgs.china@sgs.com
Member of the SGS Group (SGS SA)

附件

PBB/PBDE 检测流程图

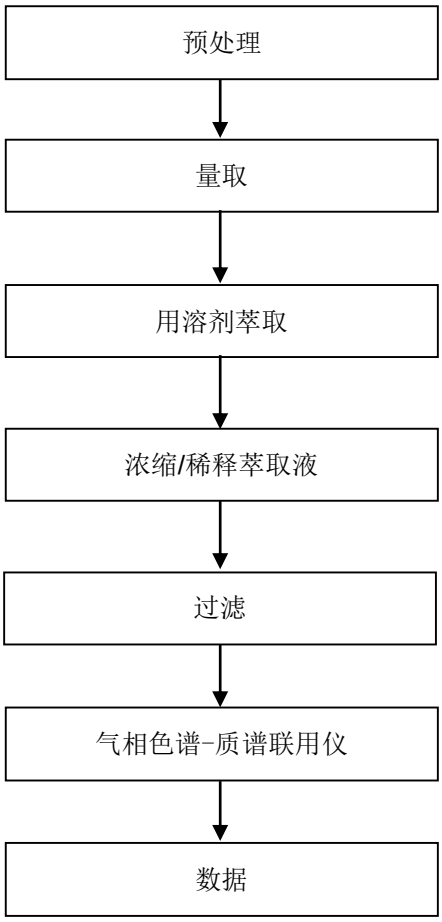

检验检测专用章 Inspection & Testing Services
SGS-CSTC Standards Technical Services Co., Ltd. Guangzhou Branch Technical Services Co., Ltd. Chemical Laboratory.

Unless otherwise agreed in writing, this document is issued by the Company subject to its General Conditions of Service printed overleaf, available on request or accessible at https://www.sgs.com/en/Terms-and-Conditions. Attention is drawn to the limitation of liability, indemnification and jurisdiction issues defined therein. Any holder of this document is advised that information contained hereon reflects the Company's findings at the time of its intervention only and within the limits of Client's instructions, if any. The Company's sole responsibility is to its Client and this document does not exonerate parties to a transaction from exercising all their rights and obligations under the transaction documents. This document cannot be reproduced except in full, without prior written approval of the Company. Any unauthorized alteration, forgery or falsification of the content or appearance of this document is unlawful and offenders may be prosecuted to the fullest extent of the law. Unless otherwise stated the results shown in this test report refer only to the sample(s) tested.
Attention: To check the authenticity of testing /inspection report & certificate, please contact us at telephone: (86-755) 8307 1443, or email: CN.Doccheck@sgs.com

No.198, Kezhu Road, Science City, Economic & Technological Development Area, Guangzhou, Guangdong, China 510663 t (86-20) 82155555 www.sgsgroup.com.cn
中国·广东·广州高新技术产业开发区科学城科珠路198号 邮编: 510663 t (86-20) 82155555 sgs.china@sgs.com

Member of the SGS Group (SGS SA)

附件

Phthalates 检测流程图

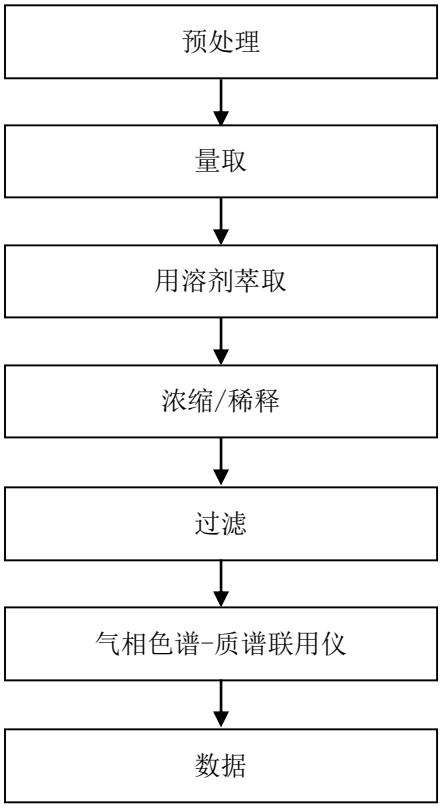

Unless otherwise agreed in writing, this document is issued by the Company subject to its General Conditions of Service printed overleaf, available on request or accessible at https://www.sgs.com/en/Terms-and-Conditions. Attention is drawn to the limitation of liability, indemnification and jurisdiction issues defined therein. Any holder of this document is advised that information contained hereon reflects the Company's findings at the time of its intervention only and within the limits of Client's instructions, if any. The Company's sole responsibility is to its Client and this document does not exonerate parties to a transaction from exercising all their rights and obligations under the transaction documents. This document cannot be reproduced except in full, without prior written approval of the Company. Any unauthorized alteration, forgery or falsification of the content or appearance of this document is unlawful and offenders may be prosecuted to the fullest extent of the law. Unless otherwise stated the results shown in this test report refer only to the sample(s) tested.
Attention: To check the authenticity of testing /inspection report & certificate, please contact us at telephone: (86-755) 8307 1443, or email: CN.Doccheck@sgs.com

检验检测专用章 Inspection & Testing Services
SGS-CSTC Standards Technical Services Co., Ltd. Guangzhou Branch Testing Center / Chemical Laboratory

No.198, Kezhu Road, Science City, Economic & Technological Development Area, Guangzhou, Guangdong, China 510663 t (86–20) 82155555 www.sgsgroup.com.cn
中国·广东·广州高新技术产业开发区科学城科珠路198号 邮编: 510663 t (86–20) 82155555 sgs.china@sgs.com

Member of the SGS Group (SGS SA)

样品照片：



CAN24-0031570-0001.C007

此照片仅限于随 SGS 正本报告使用

报告结束

检验检测专用章 Inspection & Testing Services
SGS-CSTC Standards Technical Services Co., Ltd. Guangzhou Branch Technical Services Co., Ltd. Chemical Laboratory.

Unless otherwise agreed in writing, this document is issued by the Company subject to its General Conditions of Service printed overleaf, available on request or accessible at https://www.sgs.com/en/Terms-and-Conditions. Attention is drawn to the limitation of liability, indemnification and jurisdiction issues defined therein. Any holder of this document is advised that information contained hereon reflects the Company's findings at the time of its intervention only and within the limits of Client's instructions, if any. The Company's sole responsibility is to its Client and this document does not exonerate parties to a transaction from exercising all their rights and obligations under the transaction documents. This document cannot be reproduced except in full, without prior written approval of the Company. Any unauthorized alteration, forgery or falsification of the content or appearance of this document is unlawful and offenders may be prosecuted to the fullest extent of the law. Unless otherwise stated the results shown in this test report refer only to the sample(s) tested.
Attention: To check the authenticity of testing /inspection report & certificate, please contact us at telephone: (86-755) 8307 1443, or email: CN.Doccheck@sgs.com

No.198, Kezhu Road, Science City, Economic & Technological Development Area, Guangzhou, Guangdong, China 510663 t (86–20) 82155555 www.sgsgroup.com.cn
中国 · 广东 · 广州高新技术产业开发区科学城科珠路198号 邮编: 510663 t (86–20) 82155555 sgs.china@sgs.com

Member of the SGS Group (SGS SA)

Test Report

No.: SHAEC24013616009 **Date:** Jun 27, 2024

Client Name: Xuancheng Changfeng Electroplating Technology Co., Ltd.

Client Address: No. 16 Jinniu Xi Road, Langxi County Economic Development Zone, Xuancheng, Anhui

Sample Name: Plating

Model No.: Fog tin plating

Supplier: CHANGFENG

The above sample(s) and information were provided by the client.

SGS Job No.: SHP24-019514

Sample Receiving Date: Jun 21, 2024

Testing Period: Jun 21, 2024 ~ Jun 25, 2024

Test Requested: Select test(s) as requested by the client.

Test Method(s): Please refer to next page(s).

Test Result(s): Please refer to next page(s).

Test Requirement	Conclusion
EU RoHS Directive (EU) 2015/863 amending Annex II to Directive 2011/65/EU - Lead, Mercury, Cadmium, Hexavalent chromium, Polybrominated biphenyls (PBB), Polybrominated diphenyl ethers (PBDE), Bis(2-ethylhexyl) phthalate (DEHP), Butyl benzyl phthalate (BBP), Dibutyl phthalate (DBP) and Diisobutyl phthalate (DIBP)	Pass

Signed for and on behalf of
SGS-CSTC Standards Technical Services (Shanghai) Co., Ltd.

Carol Luo

Carol Luo
Approved Signatory

scan to see the report

04E0E014

Unless otherwise agreed in writing, this document is issued by the Company subject to its General Conditions of Service printed overleaf, available on request or accessible at http://www.sgs.com/en/Terms-and-Conditions.aspx and, for electronic format documents, subject to Terms and Conditions for Electronic Documents at http://www.sgs.com/en/Terms-and-Conditions/Terms-e-Document.aspx. Attention is drawn to the limitation of liability, indemnification and jurisdiction issues defined therein. Any holder of this document is advised that information contained hereon reflects the Company's findings at the time of its intervention only and within the limits of Client's instructions, if any. The Company's sole responsibility is to its Client and this document does not exonerate parties to a transaction from exercising all their rights and obligations under the transaction documents. This document cannot be reproduced except in full, without prior written approval of the Company. Any unauthorized alteration, forgery or falsification of the content or appearance of this document is unlawful and offenders may be prosecuted to the fullest extent of the law. Unless otherwise stated the results shown in this test report refer only to the sample(s) tested.
Attention: To check the authenticity of testing /inspection report & certificate, please contact us at telephone: (86-755) 8307 1443, or email: CN.Doccheck@sgs.com

3rd Building,No.889 Yishan Road Xuhui District,Shanghai China 200233 t E&E (86-21) 61402553 f E&E (86-21)64953679 www.sgsgroup.com.cn
中国·上海·徐汇区宜山路889号3号楼 邮编: 200233 t HL (86-21) 61402594 f HL (86-21)61156899 e sgs.china@sgs.com

Member of the SGS Group (SGS SA)

Test Result(s):

Test Part Description：

SN ID	Sample No.	SGS Sample ID	Description
SN1	A48	SHA24-0136160-0001.C048	Silver plating

Remarks:

(1) 1 mg/kg = 1 ppm = 0.0001%
(2) MDL = Method Detection Limit
(3) ND = Not Detected (< MDL)
(4) "-" = Not Regulated

EU RoHS Directive (EU) 2015/863 amending Annex II to Directive 2011/65/EU - Lead, Mercury, Cadmium, Hexavalent chromium, Polybrominated biphenyls (PBB), Polybrominated diphenyl ethers (PBDE), Bis(2-ethylhexyl) phthalate (DEHP), Butyl benzyl phthalate (BBP), Dibutyl phthalate (DBP) and Diisobutyl phthalate (DIBP)

Test Method: With reference to IEC 62321-4:2013+AMD1:2017, IEC 62321-5:2013, IEC 62321-7-1:2015， IEC 62321-6:2015 and IEC 62321-8:2017, analysis was performed by ICP-OES, UV-Vis and GC-MS.

Test Item(s)	Limit	Unit(s)	MDL	A48
Cadmium(Cd)	100	mg/kg	10	ND
Lead (Pb)	1000	mg/kg	10	27
Mercury (Hg)	1000	mg/kg	10	ND
Hexavalent Chromium (Cr(VI))▼	-	μg/cm²	0.10	ND
Polybromobiphenyl (PBB)	1000	mg/kg	-	ND
Monobrominated biphenyl (MonoBB)	-	mg/kg	5	ND
Dibrominated biphenyl (DiBB)	-	mg/kg	5	ND
Tribrominated biphenyl (TriBB)	-	mg/kg	5	ND
Tetrabrominated biphenyl (TetraBB)	-	mg/kg	5	ND
Pentabrominated biphenyl (PentaBB)	-	mg/kg	5	ND
Hexabrominated biphenyl (HexaBB)	-	mg/kg	5	ND
Heptabrominated biphenyl (HeptaBB)	-	mg/kg	5	ND
Octabrominated biphenyl (OctaBB)	-	mg/kg	5	ND
Nonabrominated biphenyl (NonaBB)	-	mg/kg	5	ND
Decabrominated biphenyl (DecaBB)	-	mg/kg	5	ND
Polybromodiphenyl ether(PBDE)	1000	mg/kg	-	ND
Monobrominated diphenyl ether (MonoBDE)	-	mg/kg	5	ND
Dibrominated diphenyl ether (DiBDE)	-	mg/kg	5	ND
Tribrominated diphenyl ether (TriBDE)	-	mg/kg	5	ND
Tetrabrominated diphenyl ether (TetraBDE)	-	mg/kg	5	ND
Pentabrominated diphenyl ether (PentaBDE)	-	mg/kg	5	ND
Hexabrominated diphenyl ether (HexaBDE)	-	mg/kg	5	ND
Heptabrominated diphenyl ether (HeptaBDE)	-	mg/kg	5	ND

Unless otherwise agreed in writing, this document is issued by the Company subject to its General Conditions of Service printed overleaf, available on request or accessible at http://www.sgs.com/en/Terms-and-Conditions.aspx and, for electronic format documents, subject to Terms and Conditions for Electronic Documents at http://www.sgs.com/en/Terms-and-Conditions/Terms-e-Document.aspx. Attention is drawn to the limitation of liability, indemnification and jurisdiction issues defined therein. Any holder of this document is advised that information contained hereon reflects the Company's findings at the time of its intervention only and within the limits of Client's instructions, if any. The Company's sole responsibility is to its Client and this document does not exonerate parties to a transaction from exercising all their rights and obligations under the transaction documents. This document cannot be reproduced except in full, without prior written approval of the Company. Any unauthorized alteration, forgery or falsification of the content or appearance of this document is unlawful and offenders may be prosecuted to the fullest extent of the law. Unless otherwise stated the results shown in this test report refer only to the sample(s) tested .
Attention: To check the authenticity of testing /inspection report & certificate, please contact us at telephone: (86-755) 8307 1443, or email: CN.Doccheck@sgs.com

SGS-CSTC Standards Technical Services (Shanghai) Co., Ltd. Testing Center-Chemical Laboratory
3rd Building,No.889 Yishan Road Xuhui District,Shanghai China 200233 t E&E (86–21) 61402553 f E&E (86–21)64953679 www.sgsgroup.com.cn
中国·上海·徐汇区宜山路889号3号楼 邮编: 200233 t HL (86–21) 61402594 f HL (86–21)61156899 e sgs.china@sgs.com

Test Item(s)	Limit	Unit(s)	MDL	A48
Octabrominated diphenyl ether (OctaBDE)	-	mg/kg	5	ND
Nonabrominated diphenyl ether (NonaBDE)	-	mg/kg	5	ND
Decabrominated diphenyl ether (DecaBDE)	-	mg/kg	5	ND
Dibutyl phthalate (DBP)	1000	mg/kg	50	ND
Butyl benzyl phthalate (BBP)	1000	mg/kg	50	ND
Bis(2-ethylhexyl) phthalate (DEHP)	1000	mg/kg	50	ND
Diisobutyl phthalate (DIBP)	1000	mg/kg	50	ND

Notes:
(1) The maximum permissible limit is quoted from RoHS Directive (EU) 2015/863.
(2) IEC 62321 series is equivalent to EN 62321 series.
(3) ▼ = a. The sample is positive for Cr(VI) if the Cr(VI)concentration is greater than 0.13 μg/cm2. The sample coating is considered to contain Cr(VI)
b. The sample is negative for Cr(VI) if Cr(VI) is ND (concentration less than 0.10 μg/cm2). The coating is considered a non-Cr(VI) based coating
c. The result between 0.10 μg/cm2 and 0.13 μg/cm2 is considered to be inconclusive - unavoidable coating variations may influence the determination
Information on storage conditions and production date of the tested sample is unavailable and thus Cr(VI) results represent status of the sample at the time of testing.
(4) The results of PBBs, PBDEs, DBP, BBP, DEHP & DIBP are based on the complete samples submitted by the client, including plating and substrate.

Results & photo(s) of this report refer to test report SHAEC24013616004
Unless otherwise stated, the decision rule for conformity reporting is based on Binary Statement for Simple Acceptance Rule (*w*=0) stated in ILAC-G8:09/2019.

检验检测专用章 Inspection & Testing Services
SGS-CSTC Standards Technical Services (Shanghai) Co.,Ltd. Testing Center-Chemical Laboratory

Unless otherwise agreed in writing, this document is issued by the Company subject to its General Conditions of Service printed overleaf, available on request or accessible at http://www.sgs.com/en/Terms-and-Conditions.aspx and, for electronic format documents, subject to Terms and Conditions for Electronic Documents at http://www.sgs.com/en/Terms-and-Conditions/Terms-e-Document.aspx. Attention is drawn to the limitation of liability, indemnification and jurisdiction issues defined therein. Any holder of this document is advised that information contained hereon reflects the Company's findings at the time of its intervention only and within the limits of Client's instructions, if any. The Company's sole responsibility is to its Client and this document does not exonerate parties to a transaction from exercising all their rights and obligations under the transaction documents. This document cannot be reproduced except in full, without prior written approval of the Company. Any unauthorized alteration, forgery or falsification of the content or appearance of this document is unlawful and offenders may be prosecuted to the fullest extent of the law. Unless otherwise stated the results shown in this test report refer only to the sample(s) tested .
Attention: To check the authenticity of testing /inspection report & certificate, please contact us at telephone: (86-755) 8307 1443, or email: CN.Doccheck@sgs.com
3rd Building,No.889 Yishan Road Xuhui District,Shanghai China 200233 t E&E (86–21) 61402553 f E&E (86–21)64953679 www.sgsgroup.com.cn
中国·上海·徐汇区宜山路889号3号楼 邮编: 200233 t HL (86–21) 61402594 f HL (86–21)61156899 e sgs.china@sgs.com
Member of the SGS Group (SGS SA)

ATTACHMENTS

Plating Element Testing Flow Chart

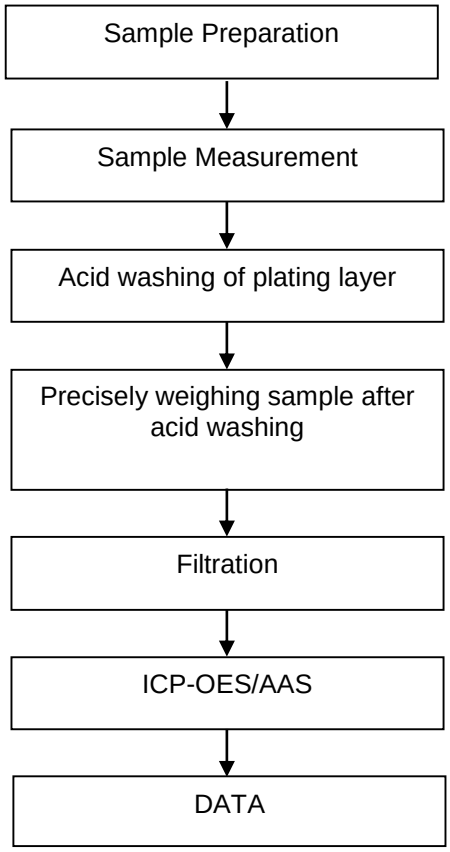

Unless otherwise agreed in writing, this document is issued by the Company subject to its General Conditions of Service printed overleaf, available on request or accessible at http://www.sgs.com/en/Terms-and-Conditions.aspx and, for electronic format documents, subject to Terms and Conditions for Electronic Documents at http://www.sgs.com/en/Terms-and-Conditions/Terms-e-Document.aspx. Attention is drawn to the limitation of liability, indemnification and jurisdiction issues defined therein. Any holder of this document is advised that information contained hereon reflects the Company's findings at the time of its intervention only and within the limits of Client's instructions, if any. The Company's sole responsibility is to its Client and this document does not exonerate parties to a transaction from exercising all their rights and obligations under the transaction documents. This document cannot be reproduced except in full, without prior written approval of the Company. Any unauthorized alteration, forgery or falsification of the content or appearance of this document is unlawful and offenders may be prosecuted to the fullest extent of the law. Unless otherwise stated the results shown in this test report refer only to the sample(s) tested .
Attention: To check the authenticity of testing /inspection report & certificate, please contact us at telephone: (86-755) 8307 1443, or email: CN.Doccheck@sgs.com
SGS-CSTC Standards Technical Services (Shanghai) Co.,Ltd. Testing Center-Chemical Laboratory
3rd Building,No.889 Yishan Road Xuhui District,Shanghai China 200233 t E&E (86–21) 61402553 f E&E (86–21)64953679 www.sgsgroup.com.cn
中国·上海·徐汇区宜山路889号3号楼 邮编: 200233 t HL (86–21) 61402594 f HL (86–21)61156899 e sgs.china@sgs.com
Member of the SGS Group (SGS SA)

ATTACHMENTS

Hexavalent Chromium (Cr(VI)) Testing Flow Chart

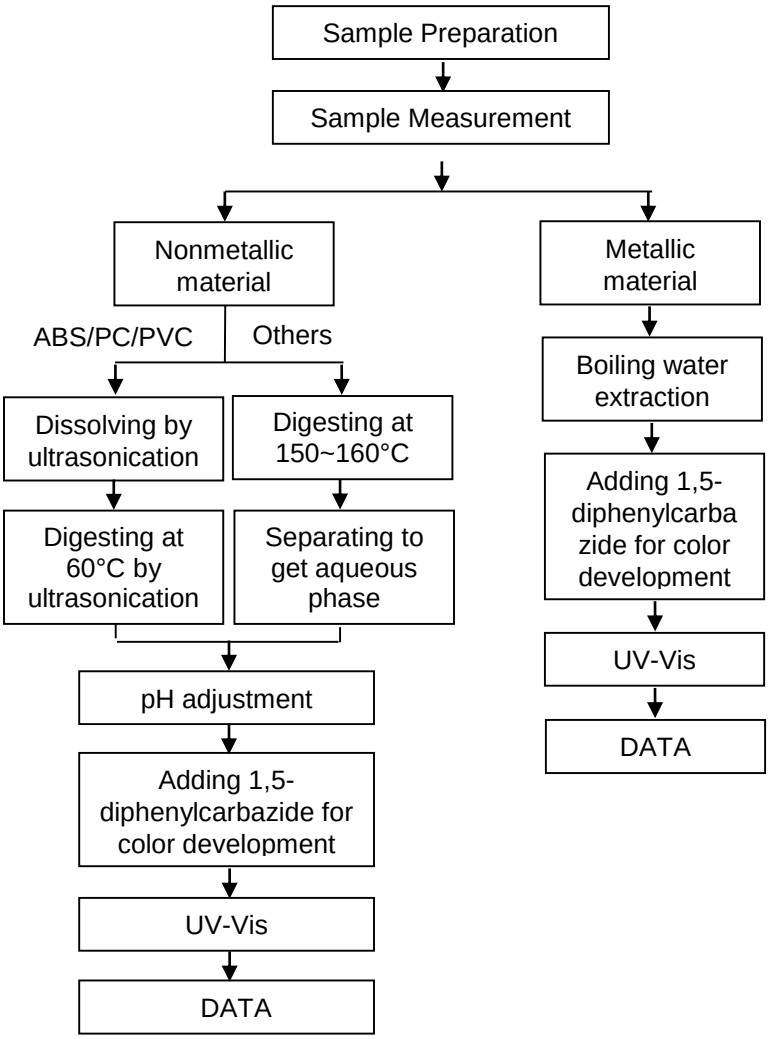

Unless otherwise agreed in writing, this document is issued by the Company subject to its General Conditions of Service printed overleaf, available on request or accessible at http://www.sgs.com/en/Terms-and-Conditions.aspx and, for electronic format documents, subject to Terms and Conditions for Electronic Documents at http://www.sgs.com/en/Terms-and-Conditions/Terms-e-Document.aspx. Attention is drawn to the limitation of liability, indemnification and jurisdiction issues defined therein. Any holder of this document is advised that information contained hereon reflects the Company's findings at the time of its intervention only and within the limits of Client's instructions, if any. The Company's sole responsibility is to its Client and this document does not exonerate parties to a transaction from exercising all their rights and obligations under the transaction documents. This document cannot be reproduced except in full, without prior written approval of the Company. Any unauthorized alteration, forgery or falsification of the content or appearance of this document is unlawful and offenders may be prosecuted to the fullest extent of the law. Unless otherwise stated the results shown in this test report refer only to the sample(s) tested .
Attention: To check the authenticity of testing /inspection report & certificate, please contact us at telephone: (86-755) 8307 1443, or email: CN.Doccheck@sgs.com

SGS-CSTC Standards Technical Services (Shanghai) Co., Ltd. Testing Center-Chemical Laboratory
3rd Building,No.889 Yishan Road Xuhui District,Shanghai China 200233 t E&E (86–21) 61402553 f E&E (86–21)64953679 www.sgsgroup.com.cn
中国·上海·徐汇区宜山路889号3号楼 邮编: 200233 t HL (86–21) 61402594 f HL (86–21)61156899 e sgs.china@sgs.com

Member of the SGS Group (SGS SA)

ATTACHMENTS

PBB/PBDE Testing Flow Chart

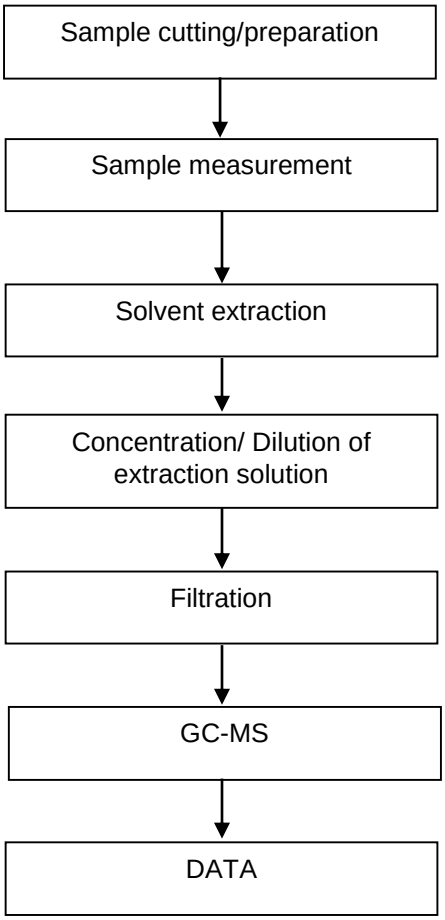

Unless otherwise agreed in writing, this document is issued by the Company subject to its General Conditions of Service printed overleaf, available on request or accessible at http://www.sgs.com/en/Terms-and-Conditions.aspx and, for electronic format documents, subject to Terms and Conditions for Electronic Documents at http://www.sgs.com/en/Terms-and-Conditions/Terms-e-Document.aspx. Attention is drawn to the limitation of liability, indemnification and jurisdiction issues defined therein. Any holder of this document is advised that information contained hereon reflects the Company's findings at the time of its intervention only and within the limits of Client's instructions, if any. The Company's sole responsibility is to its Client and this document does not exonerate parties to a transaction from exercising all their rights and obligations under the transaction documents. This document cannot be reproduced except in full, without prior written approval of the Company. Any unauthorized alteration, forgery or falsification of the content or appearance of this document is unlawful and offenders may be prosecuted to the fullest extent of the law. Unless otherwise stated the results shown in this test report refer only to the sample(s) tested .
Attention: To check the authenticity of testing /inspection report & certificate, please contact us at telephone: (86-755) 8307 1443, or email: CN.Doccheck@sgs.com
SGS-CSTC Standards Technical Services (Shanghai) Co.,Ltd. Testing Center-Chemical Laboratory
3rd Building,No.889 Yishan Road Xuhui District,Shanghai China 200233 t E&E (86–21) 61402553 f E&E (86–21)64953679 www.sgsgroup.com.cn
中国·上海·徐汇区宜山路889号3号楼 邮编: 200233 t HL (86–21) 61402594 f HL (86–21)61156899 e sgs.china@sgs.com
Member of the SGS Group (SGS SA)

ATTACHMENTS

Phthalates Testing Flow Chart

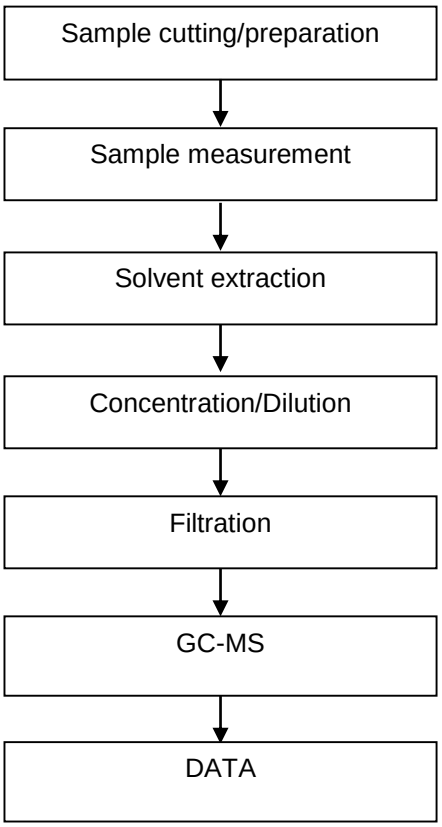

Unless otherwise agreed in writing, this document is issued by the Company subject to its General Conditions of Service printed overleaf, available on request or accessible at http://www.sgs.com/en/Terms-and-Conditions.aspx and, for electronic format documents, subject to Terms and Conditions for Electronic Documents at http://www.sgs.com/en/Terms-and-Conditions/Terms-e-Document.aspx. Attention is drawn to the limitation of liability, indemnification and jurisdiction issues defined therein. Any holder of this document is advised that information contained hereon reflects the Company's findings at the time of its intervention only and within the limits of Client's instructions, if any. The Company's sole responsibility is to its Client and this document does not exonerate parties to a transaction from exercising all their rights and obligations under the transaction documents. This document cannot be reproduced except in full, without prior written approval of the Company. Any unauthorized alteration, forgery or falsification of the content or appearance of this document is unlawful and offenders may be prosecuted to the fullest extent of the law. Unless otherwise stated the results shown in this test report refer only to the sample(s) tested .
Attention: To check the authenticity of testing /inspection report & certificate, please contact us at telephone: (86-755) 8307 1443, or email: CN.Doccheck@sgs.com

SGS-CSTC Standards Technical Services (Shanghai) Co.,Ltd. Testing Center-Chemical Laboratory
3rd Building,No.889 Yishan Road Xuhui District,Shanghai China 200233 t E&E (86–21) 61402553 f E&E (86–21)64953679 www.sgsgroup.com.cn
中国·上海·徐汇区宜山路889号3号楼 邮编: 200233 t HL (86–21) 61402594 f HL (86–21)61156899 e sgs.china@sgs.com

Member of the SGS Group (SGS SA)

Sample Photo:

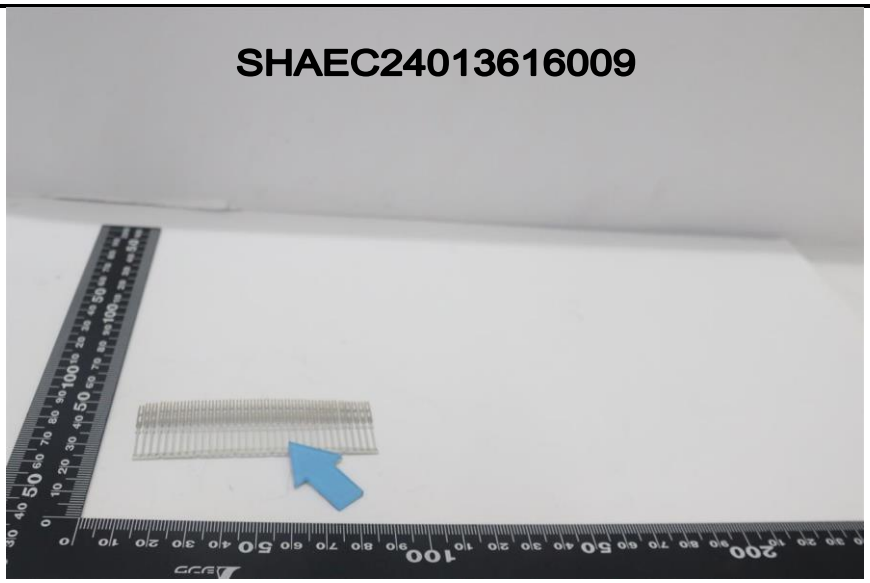

SHA24-0136160-0001.C048

SGS authenticate the photo on original report only

*** End of Report ***

Unless otherwise agreed in writing, this document is issued by the Company subject to its General Conditions of Service printed overleaf, available on request or accessible at http://www.sgs.com/en/Terms-and-Conditions.aspx and, for electronic format documents, subject to Terms and Conditions for Electronic Documents at http://www.sgs.com/en/Terms-and-Conditions/Terms-e-Document.aspx. Attention is drawn to the limitation of liability, indemnification and jurisdiction issues defined therein. Any holder of this document is advised that information contained hereon reflects the Company's findings at the time of its intervention only and within the limits of Client's instructions, if any. The Company's sole responsibility is to its Client and this document does not exonerate parties to a transaction from exercising all their rights and obligations under the transaction documents. This document cannot be reproduced except in full, without prior written approval of the Company. Any unauthorized alteration, forgery or falsification of the content or appearance of this document is unlawful and offenders may be prosecuted to the fullest extent of the law. Unless otherwise stated the results shown in this test report refer only to the sample(s) tested .
Attention: To check the authenticity of testing /inspection report & certificate, please contact us at telephone: (86-755) 8307 1443, or email: CN.Doccheck@sgs.com

SGS-CSTC Standards Technical Services (Shanghai) Co.,Ltd. Testing Center-Chemical Laboratory
3rd Building,No.889 Yishan Road Xuhui District,Shanghai China 200233 t E&E (86–21) 61402553 f E&E (86–21)64953679 www.sgsgroup.com.cn
中国·上海·徐汇区宜山路889号3号楼 邮编: 200233 t HL (86–21) 61402594 f HL (86–21)61156899 e sgs.china@sgs.com

Member of the SGS Group (SGS SA)

Test Report

No.: SHAEC24013616006 **Date:** Jun 27, 2024

Client Name: Xuancheng Changfeng Electroplating Technology Co., Ltd.

Client Address: No. 16 Jinniu Xi Road, Langxi County Economic Development Zone, Xuancheng, Anhui

Sample Name: Plating

Model No.: Gold plating

Supplier: CHANGFENG

The above sample(s) and information were provided by the client.

SGS Job No.: SHP24-019514

Sample Receiving Date: Jun 21, 2024

Testing Period: Jun 21, 2024 ~ Jun 25, 2024

Test Requested: Select test(s) as requested by the client.

Test Method(s): Please refer to next page(s).

Test Result(s): Please refer to next page(s).

Test Requirement	Conclusion
EU RoHS Directive (EU) 2015/863 amending Annex II to Directive 2011/65/EU - Lead, Mercury, Cadmium, Hexavalent chromium, Polybrominated biphenyls (PBB), Polybrominated diphenyl ethers (PBDE), Bis(2-ethylhexyl) phthalate (DEHP), Butyl benzyl phthalate (BBP), Dibutyl phthalate (DBP) and Diisobutyl phthalate (DIBP)	Pass

Signed for and on behalf of
SGS-CSTC Standards Technical Services (Shanghai) Co., Ltd.

Carol Luo
Approved Signatory

scan to see the report
47F40652

Unless otherwise agreed in writing, this document is issued by the Company subject to its General Conditions of Service printed overleaf, available on request or accessible at http://www.sgs.com/en/Terms-and-Conditions.aspx and, for electronic format documents, subject to Terms and Conditions for Electronic Documents at http://www.sgs.com/en/Terms-and-Conditions/Terms-e-Document.aspx. Attention is drawn to the limitation of liability, indemnification and jurisdiction issues defined therein. Any holder of this document is advised that information contained hereon reflects the Company's findings at the time of its intervention only and within the limits of Client's instructions, if any. The Company's sole responsibility is to its Client and this document does not exonerate parties to a transaction from exercising all their rights and obligations under the transaction documents. This document cannot be reproduced except in full, without prior written approval of the Company. Any unauthorized alteration, forgery or falsification of the content or appearance of this document is unlawful and offenders may be prosecuted to the fullest extent of the law. Unless otherwise stated the results shown in this test report refer only to the sample(s) tested.
Attention: To check the authenticity of testing /inspection report & certificate, please contact us at telephone: (86-755) 8307 1443, or email: CN.Doccheck@sgs.com

3rd Building,No.889 Yishan Road Xuhui District,Shanghai China 200233 t E&E (86-21) 61402553 f E&E (86-21)64953679 www.sgsgroup.com.cn
中国·上海·徐汇区宜山路889号3号楼 邮编: 200233 t HL (86-21) 61402594 f HL (86-21)61156899 e sgs.china@sgs.com

Member of the SGS Group (SGS SA)

Test Result(s):

Test Part Description：

SN ID	Sample No.	SGS Sample ID	Description
SN1	A45	SHA24-0136160-0001.C045	Golden plating

Remarks:

(1) 1 mg/kg = 1 ppm = 0.0001%
(2) MDL = Method Detection Limit
(3) ND = Not Detected (< MDL)
(4) "-" = Not Regulated

EU RoHS Directive (EU) 2015/863 amending Annex II to Directive 2011/65/EU - Lead, Mercury, Cadmium, Hexavalent chromium, Polybrominated biphenyls (PBB), Polybrominated diphenyl ethers (PBDE), Bis(2-ethylhexyl) phthalate (DEHP), Butyl benzyl phthalate (BBP), Dibutyl phthalate (DBP) and Diisobutyl phthalate (DIBP)

Test Method: With reference to IEC 62321-4:2013+AMD1:2017, IEC 62321-5:2013, IEC 62321-7-1:2015， IEC 62321-6:2015 and IEC 62321-8:2017, analysis was performed by ICP-OES, UV-Vis and GC-MS.

Test Item(s)	Limit	Unit(s)	MDL	A45
Cadmium(Cd)	100	mg/kg	10	ND
Lead (Pb)	1000	mg/kg	10	12
Mercury (Hg)	1000	mg/kg	10	ND
Hexavalent Chromium (Cr(VI))▼	-	μg/cm²	0.10	ND
Polybromobiphenyl (PBB)	1000	mg/kg	-	ND
Monobrominated biphenyl (MonoBB)	-	mg/kg	5	ND
Dibrominated biphenyl (DiBB)	-	mg/kg	5	ND
Tribrominated biphenyl (TriBB)	-	mg/kg	5	ND
Tetrabrominated biphenyl (TetraBB)	-	mg/kg	5	ND
Pentabrominated biphenyl (PentaBB)	-	mg/kg	5	ND
Hexabrominated biphenyl (HexaBB)	-	mg/kg	5	ND
Heptabrominated biphenyl (HeptaBB)	-	mg/kg	5	ND
Octabrominated biphenyl (OctaBB)	-	mg/kg	5	ND
Nonabrominated biphenyl (NonaBB)	-	mg/kg	5	ND
Decabrominated biphenyl (DecaBB)	-	mg/kg	5	ND
Polybromodiphenyl ether(PBDE)	1000	mg/kg	-	ND
Monobrominated diphenyl ether (MonoBDE)	-	mg/kg	5	ND
Dibrominated diphenyl ether (DiBDE)	-	mg/kg	5	ND
Tribrominated diphenyl ether (TriBDE)	-	mg/kg	5	ND
Tetrabrominated diphenyl ether (TetraBDE)	-	mg/kg	5	ND
Pentabrominated diphenyl ether (PentaBDE)	-	mg/kg	5	ND
Hexabrominated diphenyl ether (HexaBDE)	-	mg/kg	5	ND
Heptabrominated diphenyl ether (HeptaBDE)	-	mg/kg	5	ND

检验检测专用章 Inspection & Testing Services
SGS-CSTC Standards Technical Services (Shanghai) Co., Ltd. Testing Center-Chemical Laboratory

Unless otherwise agreed in writing, this document is issued by the Company subject to its General Conditions of Service printed overleaf, available on request or accessible at http://www.sgs.com/en/Terms-and-Conditions.aspx and, for electronic format documents, subject to Terms and Conditions for Electronic Documents at http://www.sgs.com/en/Terms-and-Conditions/Terms-e-Document.aspx. Attention is drawn to the limitation of liability, indemnification and jurisdiction issues defined therein. Any holder of this document is advised that information contained hereon reflects the Company's findings at the time of its intervention only and within the limits of Client's instructions, if any. The Company's sole responsibility is to its Client and this document does not exonerate parties to a transaction from exercising all their rights and obligations under the transaction documents. This document cannot be reproduced except in full, without prior written approval of the Company. Any unauthorized alteration, forgery or falsification of the content or appearance of this document is unlawful and offenders may be prosecuted to the fullest extent of the law. Unless otherwise stated the results shown in this test report refer only to the sample(s) tested .
Attention: To check the authenticity of testing /inspection report & certificate, please contact us at telephone: (86-755) 8307 1443, or email: CN.Doccheck@sgs.com
3rd Building,No.889 Yishan Road Xuhui District,Shanghai China 200233 t E&E (86-21) 61402553 f E&E (86-21)64953679 www.sgsgroup.com.cn
中国·上海·徐汇区宜山路889号3号楼 邮编: 200233 t HL (86-21) 61402594 f HL (86-21)61156899 e sgs.china@sgs.com
Member of the SGS Group (SGS SA)

Test Item(s)	Limit	Unit(s)	MDL	A45
Octabrominated diphenyl ether (OctaBDE)	-	mg/kg	5	ND
Nonabrominated diphenyl ether (NonaBDE)	-	mg/kg	5	ND
Decabrominated diphenyl ether (DecaBDE)	-	mg/kg	5	ND
Dibutyl phthalate (DBP)	1000	mg/kg	50	ND
Butyl benzyl phthalate (BBP)	1000	mg/kg	50	ND
Bis(2-ethylhexyl) phthalate (DEHP)	1000	mg/kg	50	ND
Diisobutyl phthalate (DIBP)	1000	mg/kg	50	ND

Notes:
(1) The maximum permissible limit is quoted from RoHS Directive (EU) 2015/863.
(2) IEC 62321 series is equivalent to EN 62321 series.
(3) ▼ = a. The sample is positive for Cr(VI) if the Cr(VI)concentration is greater than 0.13 μg/cm2. The sample coating is considered to contain Cr(VI)
b. The sample is negative for Cr(VI) if Cr(VI) is ND (concentration less than 0.10 μg/cm2). The coating is considered a non-Cr(VI) based coating
c. The result between 0.10 μg/cm2 and 0.13 μg/cm2 is considered to be inconclusive - unavoidable coating variations may influence the determination
Information on storage conditions and production date of the tested sample is unavailable and thus Cr(VI) results represent status of the sample at the time of testing.
(4) The results of PBBs, PBDEs, DBP, BBP, DEHP & DIBP are based on the complete samples submitted by the client, including plating and substrate.

Results & photo(s) of this report refer to test report SHAEC24013616001
Unless otherwise stated, the decision rule for conformity reporting is based on Binary Statement for Simple Acceptance Rule (*w*=0) stated in ILAC-G8:09/2019.

SGS-CSTC Standards Technical Services (Shanghai) Co., Ltd. Testing Center-Chemical Laboratory

Unless otherwise agreed in writing, this document is issued by the Company subject to its General Conditions of Service printed overleaf, available on request or accessible at http://www.sgs.com/en/Terms-and-Conditions.aspx and, for electronic format documents, subject to Terms and Conditions for Electronic Documents at http://www.sgs.com/en/Terms-and-Conditions/Terms-e-Document.aspx. Attention is drawn to the limitation of liability, indemnification and jurisdiction issues defined therein. Any holder of this document is advised that information contained hereon reflects the Company's findings at the time of its intervention only and within the limits of Client's instructions, if any. The Company's sole responsibility is to its Client and this document does not exonerate parties to a transaction from exercising all their rights and obligations under the transaction documents. This document cannot be reproduced except in full, without prior written approval of the Company. Any unauthorized alteration, forgery or falsification of the content or appearance of this document is unlawful and offenders may be prosecuted to the fullest extent of the law. Unless otherwise stated the results shown in this test report refer only to the sample(s) tested .
Attention: To check the authenticity of testing /inspection report & certificate, please contact us at telephone: (86-755) 8307 1443, or email: CN.Doccheck@sgs.com
3rd Building,No.889 Yishan Road Xuhui District,Shanghai China 200233 t E&E (86–21) 61402553 f E&E (86–21)64953679 www.sgsgroup.com.cn
中国·上海·徐汇区宜山路889号3号楼 邮编: 200233 t HL (86–21) 61402594 f HL (86–21)61156899 e sgs.china@sgs.com
Member of the SGS Group (SGS SA)

ATTACHMENTS

Plating Element Testing Flow Chart

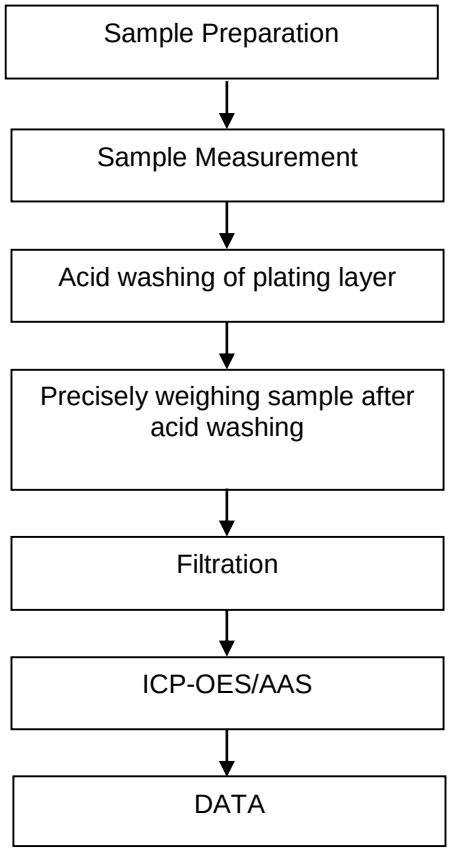

Unless otherwise agreed in writing, this document is issued by the Company subject to its General Conditions of Service printed overleaf, available on request or accessible at http://www.sgs.com/en/Terms-and-Conditions.aspx and, for electronic format documents, subject to Terms and Conditions for Electronic Documents at http://www.sgs.com/en/Terms-and-Conditions/Terms-e-Document.aspx. Attention is drawn to the limitation of liability, indemnification and jurisdiction issues defined therein. Any holder of this document is advised that information contained hereon reflects the Company's findings at the time of its intervention only and within the limits of Client's instructions, if any. The Company's sole responsibility is to its Client and this document does not exonerate parties to a transaction from exercising all their rights and obligations under the transaction documents. This document cannot be reproduced except in full, without prior written approval of the Company. Any unauthorized alteration, forgery or falsification of the content or appearance of this document is unlawful and offenders may be prosecuted to the fullest extent of the law. Unless otherwise stated the results shown in this test report refer only to the sample(s) tested .
Attention: To check the authenticity of testing /inspection report & certificate, please contact us at telephone: (86-755) 8307 1443, or email: CN.Doccheck@sgs.com
SGS-CSTC Standards Technical Services (Shanghai) Co.,Ltd. Testing Center-Chemical Laboratory
3rd Building,No.889 Yishan Road Xuhui District,Shanghai China 200233 t E&E (86–21) 61402553 f E&E (86–21)64953679 www.sgsgroup.com.cn
中国·上海·徐汇区宜山路889号3号楼 邮编: 200233 t HL (86–21) 61402594 f HL (86–21)61156899 e sgs.china@sgs.com
Member of the SGS Group (SGS SA)

ATTACHMENTS

Hexavalent Chromium (Cr(VI)) Testing Flow Chart

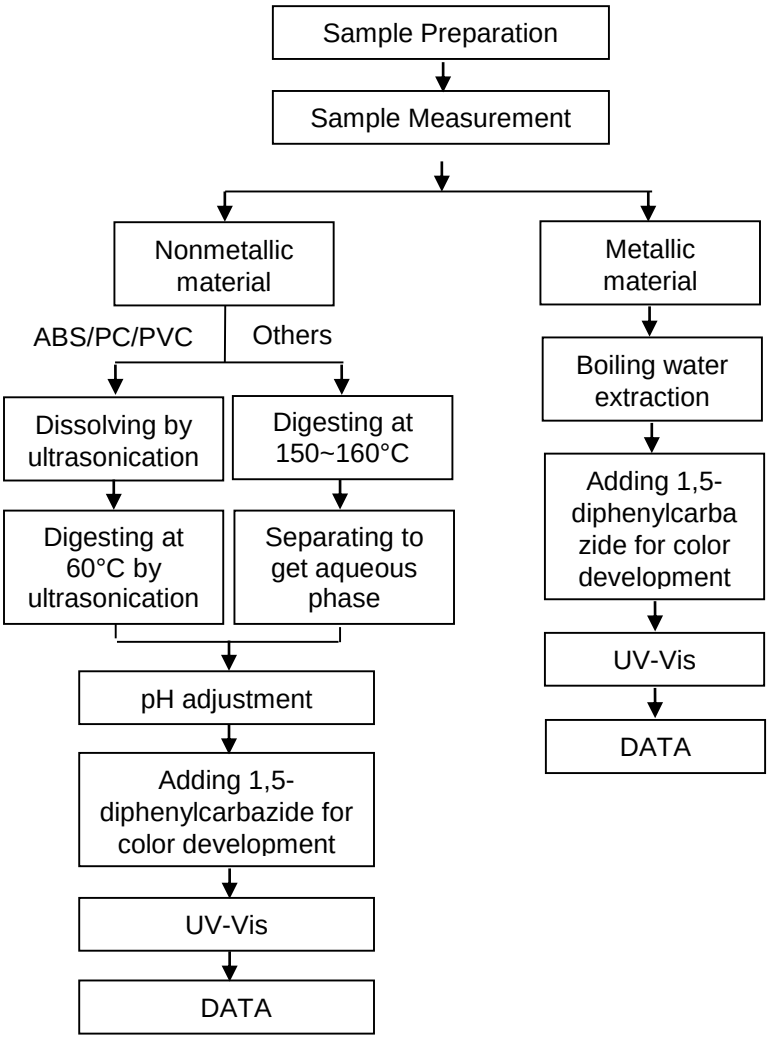

Unless otherwise agreed in writing, this document is issued by the Company subject to its General Conditions of Service printed overleaf, available on request or accessible at http://www.sgs.com/en/Terms-and-Conditions.aspx and, for electronic format documents, subject to Terms and Conditions for Electronic Documents at http://www.sgs.com/en/Terms-and-Conditions/Terms-e-Document.aspx. Attention is drawn to the limitation of liability, indemnification and jurisdiction issues defined therein. Any holder of this document is advised that information contained hereon reflects the Company's findings at the time of its intervention only and within the limits of Client's instructions, if any. The Company's sole responsibility is to its Client and this document does not exonerate parties to a transaction from exercising all their rights and obligations under the transaction documents. This document cannot be reproduced except in full, without prior written approval of the Company. Any unauthorized alteration, forgery or falsification of the content or appearance of this document is unlawful and offenders may be prosecuted to the fullest extent of the law. Unless otherwise stated the results shown in this test report refer only to the sample(s) tested .
Attention: To check the authenticity of testing /inspection report & certificate, please contact us at telephone: (86-755) 8307 1443, or email: CN.Doccheck@sgs.com

SGS-CSTC Standards Technical Services (Shanghai) Co., Ltd. Testing Center-Chemical Laboratory
3rd Building,No.889 Yishan Road Xuhui District,Shanghai China 200233 t E&E (86–21) 61402553 f E&E (86–21)64953679 www.sgsgroup.com.cn
中国·上海·徐汇区宜山路889号3号楼 邮编: 200233 t HL (86–21) 61402594 f HL (86–21)61156899 e sgs.china@sgs.com

Member of the SGS Group (SGS SA)

ATTACHMENTS

PBB/PBDE Testing Flow Chart

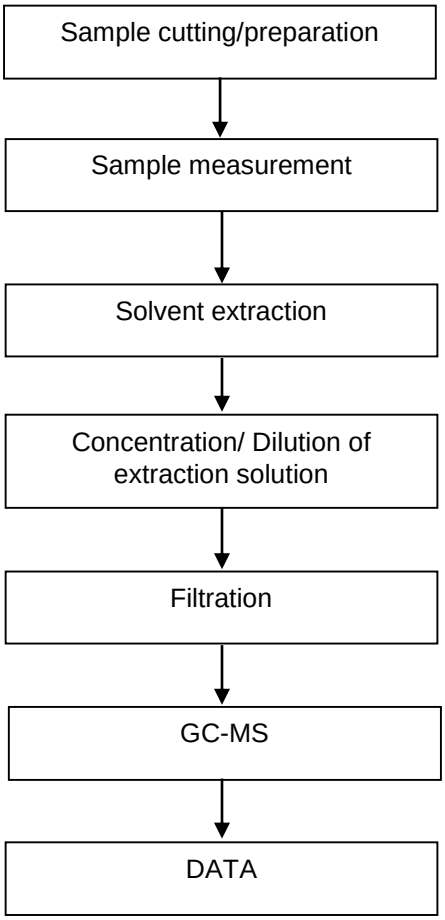

Unless otherwise agreed in writing, this document is issued by the Company subject to its General Conditions of Service printed overleaf, available on request or accessible at http://www.sgs.com/en/Terms-and-Conditions.aspx and, for electronic format documents, subject to Terms and Conditions for Electronic Documents at http://www.sgs.com/en/Terms-and-Conditions/Terms-e-Document.aspx. Attention is drawn to the limitation of liability, indemnification and jurisdiction issues defined therein. Any holder of this document is advised that information contained hereon reflects the Company's findings at the time of its intervention only and within the limits of Client's instructions, if any. The Company's sole responsibility is to its Client and this document does not exonerate parties to a transaction from exercising all their rights and obligations under the transaction documents. This document cannot be reproduced except in full, without prior written approval of the Company. Any unauthorized alteration, forgery or falsification of the content or appearance of this document is unlawful and offenders may be prosecuted to the fullest extent of the law. Unless otherwise stated the results shown in this test report refer only to the sample(s) tested .
Attention: To check the authenticity of testing /inspection report & certificate, please contact us at telephone: (86-755) 8307 1443, or email: CN.Doccheck@sgs.com
SGS-CSTC Standards Technical Services (Shanghai) Co.,Ltd. Testing Center-Chemical Laboratory
3rd Building,No.889 Yishan Road Xuhui District,Shanghai China 200233 t E&E (86–21) 61402553 f E&E (86–21)64953679 www.sgsgroup.com.cn
中国·上海·徐汇区宜山路889号3号楼 邮编: 200233 t HL (86–21) 61402594 f HL (86–21)61156899 e sgs.china@sgs.com
Member of the SGS Group (SGS SA)

ATTACHMENTS

Phthalates Testing Flow Chart

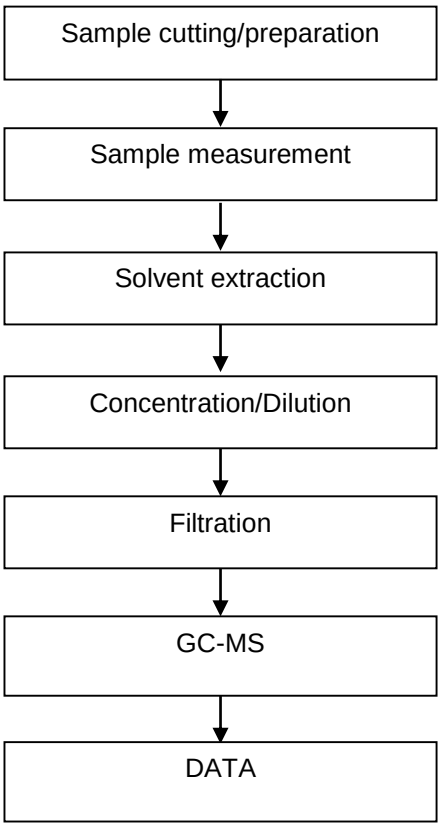

Unless otherwise agreed in writing, this document is issued by the Company subject to its General Conditions of Service printed overleaf, available on request or accessible at http://www.sgs.com/en/Terms-and-Conditions.aspx and, for electronic format documents, subject to Terms and Conditions for Electronic Documents at http://www.sgs.com/en/Terms-and-Conditions/Terms-e-Document.aspx. Attention is drawn to the limitation of liability, indemnification and jurisdiction issues defined therein. Any holder of this document is advised that information contained hereon reflects the Company's findings at the time of its intervention only and within the limits of Client's instructions, if any. The Company's sole responsibility is to its Client and this document does not exonerate parties to a transaction from exercising all their rights and obligations under the transaction documents. This document cannot be reproduced except in full, without prior written approval of the Company. Any unauthorized alteration, forgery or falsification of the content or appearance of this document is unlawful and offenders may be prosecuted to the fullest extent of the law. Unless otherwise stated the results shown in this test report refer only to the sample(s) tested .
Attention: To check the authenticity of testing /inspection report & certificate, please contact us at telephone: (86-755) 8307 1443, or email: CN.Doccheck@sgs.com
SGS-CSTC Standards Technical Services (Shanghai) Co.,Ltd. Testing Center-Chemical Laboratory
3rd Building,No.889 Yishan Road Xuhui District,Shanghai China 200233 t E&E (86–21) 61402553 f E&E (86–21)64953679 www.sgsgroup.com.cn
中国·上海·徐汇区宜山路889号3号楼 邮编: 200233 t HL (86–21) 61402594 f HL (86–21)61156899 e sgs.china@sgs.com
Member of the SGS Group (SGS SA)

Sample Photo:



SHA24-0136160-0001.C045

SGS authenticate the photo on original report only

*** End of Report ***

Unless otherwise agreed in writing, this document is issued by the Company subject to its General Conditions of Service printed overleaf, available on request or accessible at http://www.sgs.com/en/Terms-and-Conditions.aspx and, for electronic format documents, subject to Terms and Conditions for Electronic Documents at http://www.sgs.com/en/Terms-and-Conditions/Terms-e-Document.aspx. Attention is drawn to the limitation of liability, indemnification and jurisdiction issues defined therein. Any holder of this document is advised that information contained hereon reflects the Company's findings at the time of its intervention only and within the limits of Client's instructions, if any. The Company's sole responsibility is to its Client and this document does not exonerate parties to a transaction from exercising all their rights and obligations under the transaction documents. This document cannot be reproduced except in full, without prior written approval of the Company. Any unauthorized alteration, forgery or falsification of the content or appearance of this document is unlawful and offenders may be prosecuted to the fullest extent of the law. Unless otherwise stated the results shown in this test report refer only to the sample(s) tested .
Attention: To check the authenticity of testing /inspection report & certificate, please contact us at telephone: (86-755) 8307 1443, or email: CN.Doccheck@sgs.com

SGS-CSTC Standards Technical Services (Shanghai) Co.,Ltd. Testing Center-Chemical Laboratory
3rd Building,No.889 Yishan Road Xuhui District,Shanghai China 200233 t E&E (86–21) 61402553 f E&E (86–21)64953679 www.sgsgroup.com.cn
中国·上海·徐汇区宜山路889号3号楼 邮编: 200233 t HL (86–21) 61402594 f HL (86–21)61156899 e sgs.china@sgs.com

Member of the SGS Group (SGS SA)

Test Report

No.: SHAEC24013616007 **Date:** Jun 27, 2024

Client Name: Xuancheng Changfeng Electroplating Technology Co., Ltd.

Client Address: No. 16 Jinniu Xi Road, Langxi County Economic Development Zone, Xuancheng, Anhui

Sample Name: Plating

Model No.: Nickel plating

Supplier: CHANGFENG

The above sample(s) and information were provided by the client.

SGS Job No.: SHP24-019514

Sample Receiving Date: Jun 21, 2024

Testing Period: Jun 21, 2024 ~ Jun 25, 2024

Test Requested: Select test(s) as requested by the client.

Test Method(s): Please refer to next page(s).

Test Result(s): Please refer to next page(s).

Test Requirement	Conclusion
EU RoHS Directive (EU) 2015/863 amending Annex II to Directive 2011/65/EU - Lead, Mercury, Cadmium, Hexavalent chromium, Polybrominated biphenyls (PBB), Polybrominated diphenyl ethers (PBDE), Bis(2-ethylhexyl) phthalate (DEHP), Butyl benzyl phthalate (BBP), Dibutyl phthalate (DBP) and Diisobutyl phthalate (DIBP)	Pass

Signed for and on behalf of
SGS-CSTC Standards Technical Services (Shanghai) Co., Ltd.

Carol Luo

Carol Luo
Approved Signatory

scan to see the report
64C96704

Unless otherwise agreed in writing, this document is issued by the Company subject to its General Conditions of Service printed overleaf, available on request or accessible at http://www.sgs.com/en/Terms-and-Conditions.aspx and, for electronic format documents, subject to Terms and Conditions for Electronic Documents at http://www.sgs.com/en/Terms-and-Conditions/Terms-e-Document.aspx. Attention is drawn to the limitation of liability, indemnification and jurisdiction issues defined therein. Any holder of this document is advised that information contained hereon reflects the Company's findings at the time of its intervention only and within the limits of Client's instructions, if any. The Company's sole responsibility is to its Client and this document does not exonerate parties to a transaction from exercising all their rights and obligations under the transaction documents. This document cannot be reproduced except in full, without prior written approval of the Company. Any unauthorized alteration, forgery or falsification of the content or appearance of this document is unlawful and offenders may be prosecuted to the fullest extent of the law. Unless otherwise stated the results shown in this test report refer only to the sample(s) tested.
Attention: To check the authenticity of testing /inspection report & certificate, please contact us at telephone: (86-755) 8307 1443, or email: CN.Doccheck@sgs.com

3rd Building,No.889 Yishan Road Xuhui District,Shanghai China 200233 t E&E (86-21) 61402553 f E&E (86-21)64953679 www.sgsgroup.com.cn
中国·上海·徐汇区宜山路889号3号楼 邮编: 200233 t HL (86-21) 61402594 f HL (86-21)61156899 e sgs.china@sgs.com

Test Result(s):

Test Part Description：

SN ID	Sample No.	SGS Sample ID	Description
SN1	A46	SHA24-0136160-0001.C046	Silver plating

Remarks:

(1) 1 mg/kg = 1 ppm = 0.0001%
(2) MDL = Method Detection Limit
(3) ND = Not Detected (< MDL)
(4) "-" = Not Regulated

EU RoHS Directive (EU) 2015/863 amending Annex II to Directive 2011/65/EU - Lead, Mercury, Cadmium, Hexavalent chromium, Polybrominated biphenyls (PBB), Polybrominated diphenyl ethers (PBDE), Bis(2-ethylhexyl) phthalate (DEHP), Butyl benzyl phthalate (BBP), Dibutyl phthalate (DBP) and Diisobutyl phthalate (DIBP)

Test Method: With reference to IEC 62321-4:2013+AMD1:2017, IEC 62321-5:2013, IEC 62321-7-1:2015， IEC 62321-6:2015 and IEC 62321-8:2017, analysis was performed by ICP-OES, UV-Vis and GC-MS.

Test Item(s)	Limit	Unit(s)	MDL	A46
Cadmium(Cd)	100	mg/kg	10	ND
Lead (Pb)	1000	mg/kg	10	ND
Mercury (Hg)	1000	mg/kg	10	ND
Hexavalent Chromium (Cr(VI))▼	-	μg/cm²	0.10	ND
Polybromobiphenyl (PBB)	1000	mg/kg	-	ND
Monobrominated biphenyl (MonoBB)	-	mg/kg	5	ND
Dibrominated biphenyl (DiBB)	-	mg/kg	5	ND
Tribrominated biphenyl (TriBB)	-	mg/kg	5	ND
Tetrabrominated biphenyl (TetraBB)	-	mg/kg	5	ND
Pentabrominated biphenyl (PentaBB)	-	mg/kg	5	ND
Hexabrominated biphenyl (HexaBB)	-	mg/kg	5	ND
Heptabrominated biphenyl (HeptaBB)	-	mg/kg	5	ND
Octabrominated biphenyl (OctaBB)	-	mg/kg	5	ND
Nonabrominated biphenyl (NonaBB)	-	mg/kg	5	ND
Decabrominated biphenyl (DecaBB)	-	mg/kg	5	ND
Polybromodiphenyl ether(PBDE)	1000	mg/kg	-	ND
Monobrominated diphenyl ether (MonoBDE)	-	mg/kg	5	ND
Dibrominated diphenyl ether (DiBDE)	-	mg/kg	5	ND
Tribrominated diphenyl ether (TriBDE)	-	mg/kg	5	ND
Tetrabrominated diphenyl ether (TetraBDE)	-	mg/kg	5	ND
Pentabrominated diphenyl ether (PentaBDE)	-	mg/kg	5	ND
Hexabrominated diphenyl ether (HexaBDE)	-	mg/kg	5	ND
Heptabrominated diphenyl ether (HeptaBDE)	-	mg/kg	5	ND

Unless otherwise agreed in writing, this document is issued by the Company subject to its General Conditions of Service printed overleaf, available on request or accessible at http://www.sgs.com/en/Terms-and-Conditions.aspx and, for electronic format documents, subject to Terms and Conditions for Electronic Documents at http://www.sgs.com/en/Terms-and-Conditions/Terms-e-Document.aspx. Attention is drawn to the limitation of liability, indemnification and jurisdiction issues defined therein. Any holder of this document is advised that information contained hereon reflects the Company's findings at the time of its intervention only and within the limits of Client's instructions, if any. The Company's sole responsibility is to its Client and this document does not exonerate parties to a transaction from exercising all their rights and obligations under the transaction documents. This document cannot be reproduced except in full, without prior written approval of the Company. Any unauthorized alteration, forgery or falsification of the content or appearance of this document is unlawful and offenders may be prosecuted to the fullest extent of the law. Unless otherwise stated the results shown in this test report refer only to the sample(s) tested .
Attention: To check the authenticity of testing /inspection report & certificate, please contact us at telephone: (86-755) 8307 1443, or email: CN.Doccheck@sgs.com

SGS-CSTC Standards Technical Services (Shanghai) Co., Ltd. Testing Center-Chemical Laboratory
3rd Building,No.889 Yishan Road Xuhui District,Shanghai China 200233 t E&E (86–21) 61402553 f E&E (86–21)64953679 www.sgsgroup.com.cn
中国·上海·徐汇区宜山路889号3号楼 邮编: 200233 t HL (86–21) 61402594 f HL (86–21)61156899 e sgs.china@sgs.com

Test Item(s)	Limit	Unit(s)	MDL	A46
Octabrominated diphenyl ether (OctaBDE)	-	mg/kg	5	ND
Nonabrominated diphenyl ether (NonaBDE)	-	mg/kg	5	ND
Decabrominated diphenyl ether (DecaBDE)	-	mg/kg	5	ND
Dibutyl phthalate (DBP)	1000	mg/kg	50	ND
Butyl benzyl phthalate (BBP)	1000	mg/kg	50	ND
Bis(2-ethylhexyl) phthalate (DEHP)	1000	mg/kg	50	ND
Diisobutyl phthalate (DIBP)	1000	mg/kg	50	ND

Notes:
(1) The maximum permissible limit is quoted from RoHS Directive (EU) 2015/863.
(2) IEC 62321 series is equivalent to EN 62321 series.
(3) ▼ = a. The sample is positive for Cr(VI) if the Cr(VI)concentration is greater than 0.13 μg/cm2. The sample coating is considered to contain Cr(VI)
b. The sample is negative for Cr(VI) if Cr(VI) is ND (concentration less than 0.10 μg/cm2). The coating is considered a non-Cr(VI) based coating
c. The result between 0.10 μg/cm2 and 0.13 μg/cm2 is considered to be inconclusive - unavoidable coating variations may influence the determination
Information on storage conditions and production date of the tested sample is unavailable and thus Cr(VI) results represent status of the sample at the time of testing.
(4) The results of PBBs, PBDEs, DBP, BBP, DEHP & DIBP are based on the complete samples submitted by the client, including plating and substrate.

Results & photo(s) of this report refer to test report SHAEC24013616002
Unless otherwise stated, the decision rule for conformity reporting is based on Binary Statement for Simple Acceptance Rule (*w*=0) stated in ILAC-G8:09/2019.

SGS-CSTC Standards Technical Services (Shanghai) Co., Ltd. Testing Center-Chemical Laboratory.

Unless otherwise agreed in writing, this document is issued by the Company subject to its General Conditions of Service printed overleaf, available on request or accessible at http://www.sgs.com/en/Terms-and-Conditions.aspx and, for electronic format documents, subject to Terms and Conditions for Electronic Documents at http://www.sgs.com/en/Terms-and-Conditions/Terms-e-Document.aspx. Attention is drawn to the limitation of liability, indemnification and jurisdiction issues defined therein. Any holder of this document is advised that information contained hereon reflects the Company's findings at the time of its intervention only and within the limits of Client's instructions, if any. The Company's sole responsibility is to its Client and this document does not exonerate parties to a transaction from exercising all their rights and obligations under the transaction documents. This document cannot be reproduced except in full, without prior written approval of the Company. Any unauthorized alteration, forgery or falsification of the content or appearance of this document is unlawful and offenders may be prosecuted to the fullest extent of the law. Unless otherwise stated the results shown in this test report refer only to the sample(s) tested .
Attention: To check the authenticity of testing /inspection report & certificate, please contact us at telephone: (86-755) 8307 1443, or email: CN.Doccheck@sgs.com
3rd Building,No.889 Yishan Road Xuhui District,Shanghai China 200233 t E&E (86–21) 61402553 f E&E (86–21)64953679 www.sgsgroup.com.cn
中国·上海·徐汇区宜山路889号3号楼 邮编: 200233 t HL (86–21) 61402594 f HL (86–21)61156899 e sgs.china@sgs.com
Member of the SGS Group (SGS SA)

ATTACHMENTS

Plating Element Testing Flow Chart

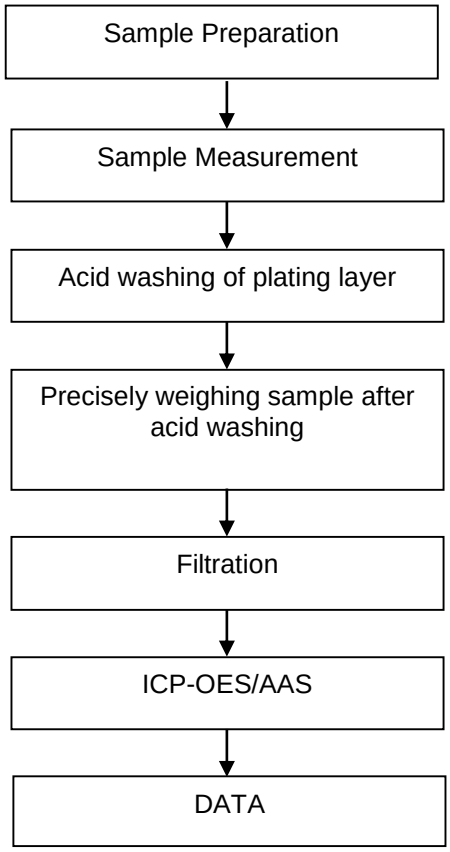

Unless otherwise agreed in writing, this document is issued by the Company subject to its General Conditions of Service printed overleaf, available on request or accessible at http://www.sgs.com/en/Terms-and-Conditions.aspx and, for electronic format documents, subject to Terms and Conditions for Electronic Documents at http://www.sgs.com/en/Terms-and-Conditions/Terms-e-Document.aspx. Attention is drawn to the limitation of liability, indemnification and jurisdiction issues defined therein. Any holder of this document is advised that information contained hereon reflects the Company's findings at the time of its intervention only and within the limits of Client's instructions, if any. The Company's sole responsibility is to its Client and this document does not exonerate parties to a transaction from exercising all their rights and obligations under the transaction documents. This document cannot be reproduced except in full, without prior written approval of the Company. Any unauthorized alteration, forgery or falsification of the content or appearance of this document is unlawful and offenders may be prosecuted to the fullest extent of the law. Unless otherwise stated the results shown in this test report refer only to the sample(s) tested .
Attention: To check the authenticity of testing /inspection report & certificate, please contact us at telephone: (86-755) 8307 1443, or email: CN.Doccheck@sgs.com
SGS-CSTC Standards Technical Services (Shanghai) Co.,Ltd. Testing Center-Chemical Laboratory
3rd Building,No.889 Yishan Road Xuhui District,Shanghai China 200233 t E&E (86–21) 61402553 f E&E (86–21)64953679 www.sgsgroup.com.cn
中国·上海·徐汇区宜山路889号3号楼 邮编: 200233 t HL (86–21) 61402594 f HL (86–21)61156899 e sgs.china@sgs.com
Member of the SGS Group (SGS SA)

ATTACHMENTS

Hexavalent Chromium (Cr(VI)) Testing Flow Chart

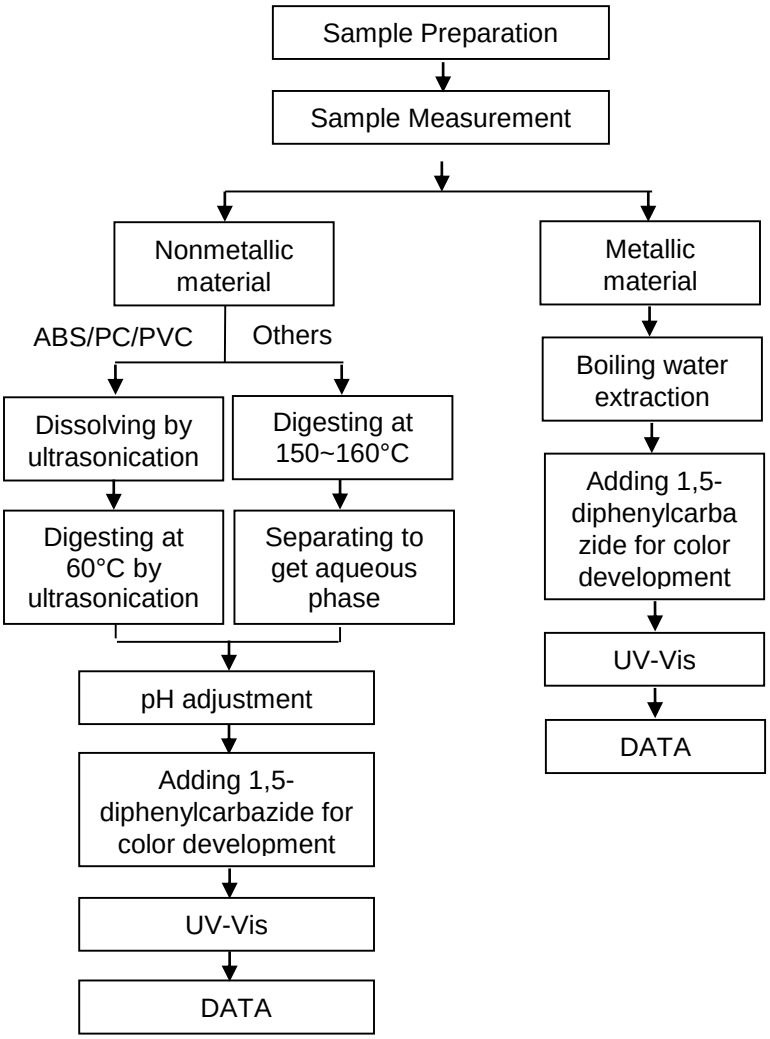

Unless otherwise agreed in writing, this document is issued by the Company subject to its General Conditions of Service printed overleaf, available on request or accessible at http://www.sgs.com/en/Terms-and-Conditions.aspx and, for electronic format documents, subject to Terms and Conditions for Electronic Documents at http://www.sgs.com/en/Terms-and-Conditions/Terms-e-Document.aspx. Attention is drawn to the limitation of liability, indemnification and jurisdiction issues defined therein. Any holder of this document is advised that information contained hereon reflects the Company's findings at the time of its intervention only and within the limits of Client's instructions, if any. The Company's sole responsibility is to its Client and this document does not exonerate parties to a transaction from exercising all their rights and obligations under the transaction documents. This document cannot be reproduced except in full, without prior written approval of the Company. Any unauthorized alteration, forgery or falsification of the content or appearance of this document is unlawful and offenders may be prosecuted to the fullest extent of the law. Unless otherwise stated the results shown in this test report refer only to the sample(s) tested .
Attention: To check the authenticity of testing /inspection report & certificate, please contact us at telephone: (86-755) 8307 1443, or email: CN.Doccheck@sgs.com
SGS-CSTC Standards Technical Services (Shanghai) Co., Ltd. Testing Center-Chemical Laboratory
3rd Building,No.889 Yishan Road Xuhui District,Shanghai China 200233 t E&E (86–21) 61402553 f E&E (86–21)64953679 www.sgsgroup.com.cn
中国·上海·徐汇区宜山路889号3号楼 邮编: 200233 t HL (86–21) 61402594 f HL (86–21)61156899 e sgs.china@sgs.com
Member of the SGS Group (SGS SA)

ATTACHMENTS

PBB/PBDE Testing Flow Chart

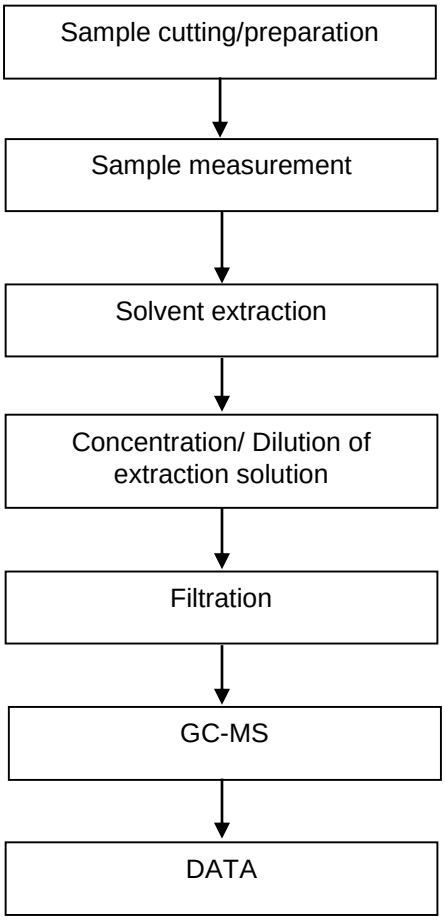

Unless otherwise agreed in writing, this document is issued by the Company subject to its General Conditions of Service printed overleaf, available on request or accessible at http://www.sgs.com/en/Terms-and-Conditions.aspx and, for electronic format documents, subject to Terms and Conditions for Electronic Documents at http://www.sgs.com/en/Terms-and-Conditions/Terms-e-Document.aspx. Attention is drawn to the limitation of liability, indemnification and jurisdiction issues defined therein. Any holder of this document is advised that information contained hereon reflects the Company's findings at the time of its intervention only and within the limits of Client's instructions, if any. The Company's sole responsibility is to its Client and this document does not exonerate parties to a transaction from exercising all their rights and obligations under the transaction documents. This document cannot be reproduced except in full, without prior written approval of the Company. Any unauthorized alteration, forgery or falsification of the content or appearance of this document is unlawful and offenders may be prosecuted to the fullest extent of the law. Unless otherwise stated the results shown in this test report refer only to the sample(s) tested .
Attention: To check the authenticity of testing /inspection report & certificate, please contact us at telephone: (86-755) 8307 1443, or email: CN.Doccheck@sgs.com
SGS-CSTC Standards Technical Services (Shanghai) Co.,Ltd. Testing Center-Chemical Laboratory
3rd Building,No.889 Yishan Road Xuhui District,Shanghai China 200233 t E&E (86–21) 61402553 f E&E (86–21)64953679 www.sgsgroup.com.cn
中国·上海·徐汇区宜山路889号3号楼 邮编: 200233 t HL (86–21) 61402594 f HL (86–21)61156899 e sgs.china@sgs.com
Member of the SGS Group (SGS SA)

ATTACHMENTS

Phthalates Testing Flow Chart

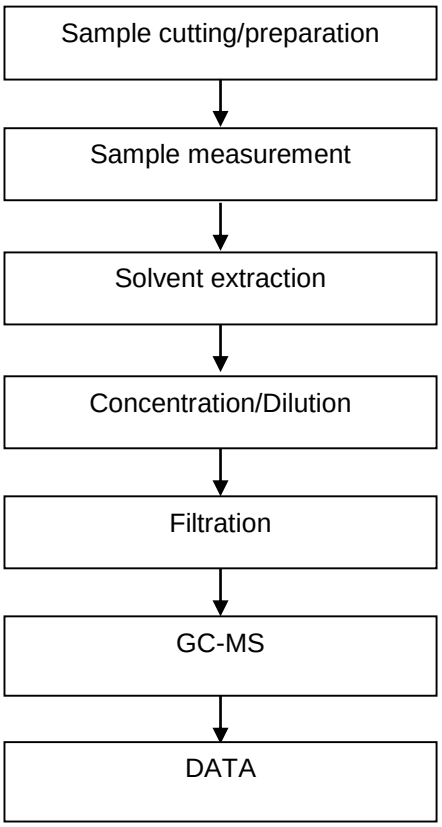

Unless otherwise agreed in writing, this document is issued by the Company subject to its General Conditions of Service printed overleaf, available on request or accessible at http://www.sgs.com/en/Terms-and-Conditions.aspx and, for electronic format documents, subject to Terms and Conditions for Electronic Documents at http://www.sgs.com/en/Terms-and-Conditions/Terms-e-Document.aspx. Attention is drawn to the limitation of liability, indemnification and jurisdiction issues defined therein. Any holder of this document is advised that information contained hereon reflects the Company's findings at the time of its intervention only and within the limits of Client's instructions, if any. The Company's sole responsibility is to its Client and this document does not exonerate parties to a transaction from exercising all their rights and obligations under the transaction documents. This document cannot be reproduced except in full, without prior written approval of the Company. Any unauthorized alteration, forgery or falsification of the content or appearance of this document is unlawful and offenders may be prosecuted to the fullest extent of the law. Unless otherwise stated the results shown in this test report refer only to the sample(s) tested .
Attention: To check the authenticity of testing /inspection report & certificate, please contact us at telephone: (86-755) 8307 1443, or email: CN.Doccheck@sgs.com
SGS-CSTC Standards Technical Services (Shanghai) Co.,Ltd. Testing Center-Chemical Laboratory
3rd Building,No.889 Yishan Road Xuhui District,Shanghai China 200233 t E&E (86–21) 61402553 f E&E (86–21)64953679 www.sgsgroup.com.cn
中国·上海·徐汇区宜山路889号3号楼 邮编: 200233 t HL (86–21) 61402594 f HL (86–21)61156899 e sgs.china@sgs.com
Member of the SGS Group (SGS SA)

Sample Photo:



SHA24-0136160-0001.C046

SGS authenticate the photo on original report only

*** End of Report ***

Unless otherwise agreed in writing, this document is issued by the Company subject to its General Conditions of Service printed overleaf, available on request or accessible at http://www.sgs.com/en/Terms-and-Conditions.aspx and, for electronic format documents, subject to Terms and Conditions for Electronic Documents at http://www.sgs.com/en/Terms-and-Conditions/Terms-e-Document.aspx. Attention is drawn to the limitation of liability, indemnification and jurisdiction issues defined therein. Any holder of this document is advised that information contained hereon reflects the Company's findings at the time of its intervention only and within the limits of Client's instructions, if any. The Company's sole responsibility is to its Client and this document does not exonerate parties to a transaction from exercising all their rights and obligations under the transaction documents. This document cannot be reproduced except in full, without prior written approval of the Company. Any unauthorized alteration, forgery or falsification of the content or appearance of this document is unlawful and offenders may be prosecuted to the fullest extent of the law. Unless otherwise stated the results shown in this test report refer only to the sample(s) tested .
Attention: To check the authenticity of testing /inspection report & certificate, please contact us at telephone: (86-755) 8307 1443, or email: CN.Doccheck@sgs.com

SGS-CSTC Standards Technical Services (Shanghai) Co., Ltd. Testing Center-Chemical Laboratory
3rd Building,No.889 Yishan Road Xuhui District,Shanghai China 200233 t E&E (86–21) 61402553 f E&E (86–21)64953679 www.sgsgroup.com.cn
中国·上海·徐汇区宜山路889号3号楼 邮编: 200233 t HL (86–21) 61402594 f HL (86–21)61156899 e sgs.china@sgs.com

Member of the SGS Group (SGS SA)

环境管理物质不使用证书
（原材料及原材料厂家 LIST）

向贵司销售的零部件及组件的使用材料、包装材料等中未使用 **DLK**《环境管理物质技术标准》（**508000-D-002**）要求的管理物质（禁止使用对象）及其用途，特此证明。

且：零部件及组件的使用在材料，由以下成分构成。特此报告

1.零件料号：U3B22D-09LM4YN24HF

以下清单所列均质原材料为本产品中所用到的所有原材料

ITEM	Raw Material	Raw Material Supplier	Cd	Pb	Cr^{6+}	Hg	PBB/PBDE	Cl	Br	PAHs	第三方测试报告号码
			含量(ppm)	含量(ppm)	含量(ppm)	含量(ppm)	含量(ppm)	含量(ppm)	含量(ppm)	含量(ppm)	
Housing/ Cover	PA9T	可乐丽	N.D	7	N.D	N.D	N.D	N.D	N.D		SHAEC24013601919
Contact（1-4）	C5191	广铜	N.D	38	N.D	N.D	N.D				CANEC24003157005
Contact（5-9）	C2680	广铜	N.D	41	N.D	N.D	N.D				CANEC24003157013
Shell	SPCC	华为	N.D	N.D	N.D	N.D					SHAEC24013601926
Plating Sn	Sn	长风	N.D	27	N.D	N.D	N.D				SHAEC24013616009
Plating Au	Au	长风	N.D	12	N.D	N.D	N.D				SHAEC24013616006
Plating Ni	Ni	长风	N.D	N.D	N.D	N.D	N.D				SHAEC24013616007

2、 ICP 测试对象物质（塑料（含橡胶）涂料、油墨和线材料中的镉和铅）测试要求的 ICP 数据另附。ICP 测试对象物质的成分表或 MSDS 另附。

备注：请填写该类零部件用到的所有部件、原材料、辅助材料的详细信息。

必须详细、正确的填写部件、原材料、辅助材料的供应商名称、材料型号

主管/职位：管理者代表

公司全称：德为康电子科技有限公司

公司公章：