版本 REV.	日 期 DATE	DCN NO.	变更内容 DESCRIPTION	制图 DRAWN
B				

成品规格图号DRAWING NO. FN2300 2S

NO.of Contacts	DIMENSIONS				
	A	B	C	D	E
4	3.00	7.90	8.70	5.10	5.00
5	4.00	8.90	9.70	6.10	6.00
6	5.00	9.90	10.70	7.10	7.00
7	6.00	10.90	11.70	8.10	8.00
8	7.00	11.90	12.70	9.10	9.00
30	29.00	33.90	34.70	31.10	31.00

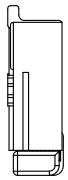

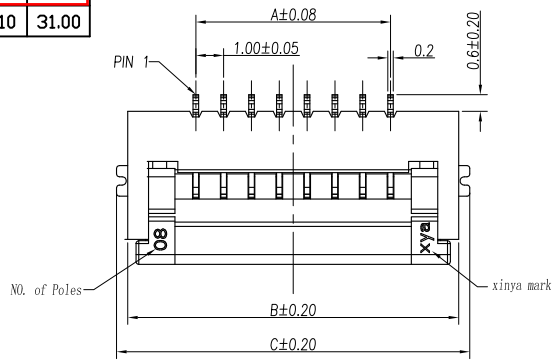

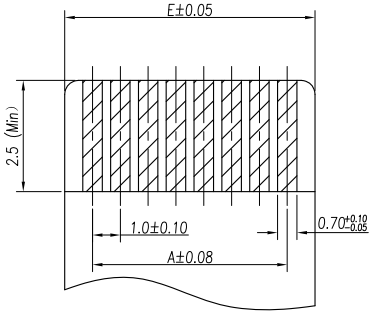

Recommend FPC/FFC Layout
Thickness:0.3±0.03

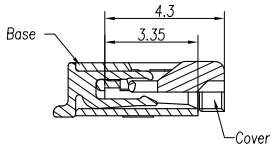

Section: A-A
COVER CLOSE

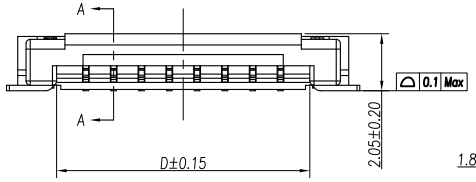

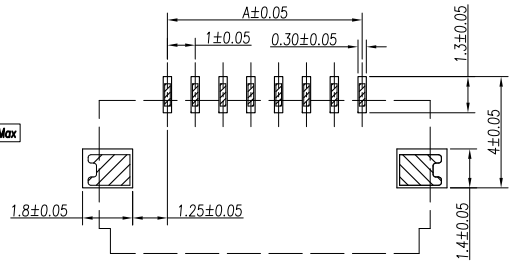

P.C.B Layout REF.

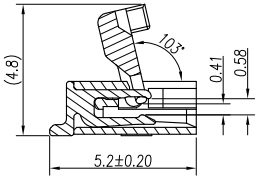

Section: A-A
COVER OPEN

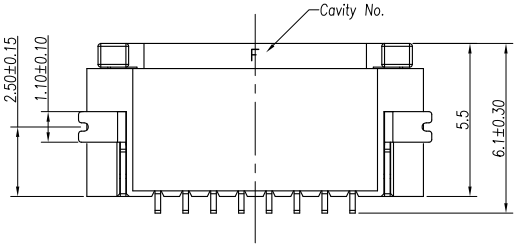

Ordering Code:

FN23 – XX R XX–2A K
① ② ③ ④ ⑤

① Series NO.

② Circuits number

③ R: Right Angle

④ Plating Code:

Definition	Code
◎Matte Tin plated:	WA

⑤ Packing:

K: Reel

SPECIFICATIONS:

1.Voltage rating: 50V AC/DC
2.Current rating: 0.5A AC,DC
3.Temperature range: −40°C~+85°C
4.withstand voltage: 500V AC/minute
5.Insulation resistance: 100MΩ Min.
6.Contact resistance: 20mΩ Max.
7.Material:
Housing: High Temperature Thermoplastic,UL94V−0.Natural
Contact: Phosphor Bronze/Matte Tin−plated
Mounted Ear: Copper alloy/Matte Tin−plated

GENERL TOLERANCE		制 图 (DR.)	Ring.li	料 号 PART NO.	FN23−XXRXX−2AK	版 本 REV.	A
X.±0.30	X.°±2°	审 核 (CHK.)	Knox.Jin	品 名 TITLE	P1.00 SMT	页 次 SHEET	1/1
.X±0.25	.X°±1°	核 准 (APPD.)	Knox.Jin	客户料号 CUTM.NO.			
.XX±0.20	.XX°±0.5°	第1版 (OR.D.)	2012.06.01				
.XXX±0.10	.XXX°±0.5°	单 位 UNITS	MM	比 例 SCALE	1:1		

Xinya Electronics 苏州新亚电通有限公司
SUZHOU XINYA ELECTRONIC COMMUNICATION Co. LTD.