TL431J, TL432J Precision Programmable Reference

1 Features

- Reference voltage tolerance at 25°C
  - 1% (A grade)
  - 0.5% (B grade)
- Adjustable output voltage: V_{ref} to 36 V
- Operation from −40°C to 125°C
- Typical temperature drift (TL43xB)
  - 14 mV (Q temp)
- Low Output Noise
- 0.2-Ω Typical output impedance
- Sink-current capability: 0.7 mA to 100 mA

2 Applications

- Adjustable voltage and current referencing
- Secondary side regulation in flyback SMPSs
- Zener replacement
- Voltage monitoring
- Comparator with integrated reference

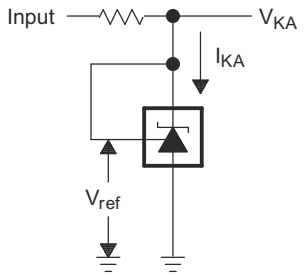

Simplified Schematic

3 Description

The TL431J and TL432J are pin-to-pin alternatives to TL431 / TL432.

The TL431J and TL432J devices are three-terminal adjustable shunt regulators, with specified thermal stability over applicable automotive, commercial, and military temperature ranges. The output voltage can be set to any value between V_{ref} (approximately 2.5 V) and 36 V, with two external resistors. These devices have a typical output impedance of 0.2 Ω. Active output circuitry provides a very sharp turn-on characteristic, making these devices excellent replacements for Zener diodes in many applications, such as onboard regulation, adjustable power supplies, and switching power supplies. The TL432J device has exactly the same functionality and electrical specifications as the TL431J device.

Both the TL431J and TL432J devices are offered in two grades, with initial tolerances (at 25°C) of 0.5% and 1%, for the B and A grade, respectively. In addition, low output drift versus temperature ensures good stability over the entire temperature range.

Device Information

PART NUMBER (1)	PACKAGE (PIN)	BODY SIZE (NOM)
TL43xJ	SOT-23-3 (3)	2.90 mm × 1.30 mm

(1) For all available packages, see the orderable addendum at the end of the data sheet.

An IMPORTANT NOTICE at the end of this data sheet addresses availability, warranty, changes, use in safety-critical applications, intellectual property matters and other important disclaimers. PRODUCTION DATA.

Table of Contents

1 Features....1
2 Applications....1
3 Description....1
4 Revision History....2
5 Device Comparison Table....3
6 Pin Configuration and Functions....3
Pin Functions....3
7 Specifications....4
7.1 Absolute Maximum Ratings....4
7.2 ESD Ratings....4
7.3 Thermal Information....4
7.4 Recommended Operating Conditions....4
7.5 Electrical Characteristics, TL431AQ-J, TL432AQ-J....5
7.6 Electrical Characteristics, TL431BQ-J, TL432BQ-J....6
8 Parameter Measurement Information....11
8.1 Temperature Coefficient....11
8.2 Dynamic Impedance....12
9 Detailed Description....13
9.1 Overview....13
9.2 Functional Block Diagram....13
9.3 Feature Description....14
9.4 Device Functional Modes....14
10 Applications and Implementation....15
10.1 Application Information....15
10.2 Typical Applications....15
10.3 System Examples....20
11 Power Supply Recommendations....23
12 Layout....24
12.1 Layout Guidelines....24
12.2 Layout Example....24
13 Device and Documentation Support....25
13.1 Device Nomenclature....25
13.2 Receiving Notification of Documentation Updates....25
13.3 Support Resources....25
13.4 Trademarks....25
13.5 Electrostatic Discharge Caution....25
13.6 Glossary....25
14 Mechanical, Packaging, and Orderable Information....25
15 Package Option Addendum....29

4 Revision History

NOTE: Page numbers for previous revisions may differ from page numbers in the current version.

DATE	REVISION	NOTES
September 2022	*	Initial Release

Copyright © 2022 Texas Instruments Incorporated

5 Device Comparison Table

DEVICE PINOUT	INITIAL ACCURACY	OPERATING FREE-AIR TEMPERATURE (T_A)
TL431J TL432J	B: 0.5% A: 1%	Q: -40°C to 125°C

6 Pin Configuration and Functions

TL431J DBZ (SOT23-3) PACKAGE
(TOP VIEW)

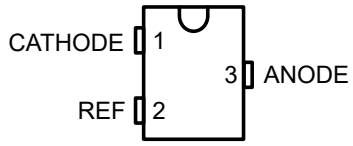

TL432J DBZ (SOT23-3) PACKAGE
(TOP VIEW)

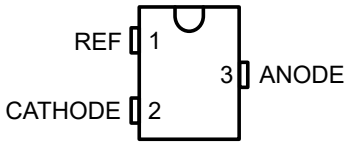

Pin Functions

PIN			TYPE	DESCRIPTION
NAME	TL431J	TL432J		
	DBZ	DBZ		
CATHODE	1	2	I/O	Shunt Current/Voltage input
REF	2	1	I	Threshold relative to common anode
ANODE	3	3	O	Common pin, normally connected to ground

Copyright © 2022 Texas Instruments Incorporated

7 Specifications

7.1 Absolute Maximum Ratings

over operating free-air temperature range (unless otherwise noted)(1)

			MIN	MAX	UNIT
V_{KA}	Cathode Voltage(2)			37	V
I_{KA}	Continuos Cathode Current Range		–100	150	mA
$I_{I(ref)}$	Reference Input Current		–0.05	10	mA
T_J	Operating Junction Temperature Range			150	C
T_{stg}	Storage Temperature Range		–65	150	C

(1) Stresses beyond those listed under *Absolute Maximum Ratings* may cause permanent damage to the device. These are stress ratings only, which do not imply functional operation of the device at these or any other conditions beyond those indicated under *Recommended Operating Conditions*. Exposure to absolute-maximum-rated conditions for extended periods may affect device reliability.
(2) All voltage values are with respect to ANODE, unless otherwise noted.

7.2 ESD Ratings

			VALUE	UNIT
$V_{(ESD)}$	Electrostatic discharge	Human body model (HBM), per ANSI/ESDA/JEDEC JS-001pins(1)	±2000	V
		Charged-device model (CDM), per JEDEC specification JESD22-C101 (2)	±1000	

(1) JEDEC document JEP155 states that 500-V HBM allows safe manufacturing with a standard ESD control process. Manufacturing with less than 500-V HBM is possible with the necessary precautions.
(2) JEDEC document JEP157 states that 250-V CDM allows safe manufacturing with a standard ESD control process. Manufacturing with less than 250-V CDM is possible with the necessary precautions.

7.3 Thermal Information

THERMAL METRIC(1)		TL43xJ DBZ 3 PINS	UNIT
$R_{\theta JA}$	Junction-to-ambient thermal resistance	206	C/W
$R_{\theta JC(top)}$	Junction-to-case (top) thermal resistance	76	C/W

(1) For more information about traditional and new thermal metrics, see the *IC Package Thermal Metrics* application report (SPRA953)

7.4 Recommended Operating Conditions

See (1)

			MIN	MAX	UNIT
V_{KA}	Cathode Voltage		V_{ref}	36	V
I_{KA}	Continuous Cathode Current Range		1	100	mA
T_A	Operating Free-Air Temperature	TL43xxQ-J	–40	125	C

(1) Maximum power dissipation is a function of $T_{J(max)}$, θ_{JA}, and T_A. The maximum allowable power dissipation at any allowable ambient temperature is $P_D = (T_{J(max)} – T_A)/\theta_{JA}$. Operating at the absolute maximum T_J of 150°C can affect reliability.

Copyright © 2022 Texas Instruments Incorporated

7.5 Electrical Characteristics, TL431AQ-J, TL432AQ-J

over recommended operating conditions, T_A = 25°C (unless otherwise noted)

PARAMETER		TEST CIRCUIT	TEST CONDITIONS		MIN	TYP	MAX	UNIT
V_{ref}	Reference Voltage	See Figure 8-1	V_{KA} = V_{ref}, I_{KA} = 10 mA		2470	2495	2520	mV
$V_{I(dev)}$	Deviation of reference input voltage over full temperature range (1)	See Figure 8-1	V_{KA} = V_{ref}, I_{KA} = 10 mA			14	34	mV
ΔV_{ref} / ΔV_{KA}	Ratio of change in reference voltage to the change in cathode voltage	See Figure 8-2	I_{KA} = 10 mA	ΔV_{KA} = 10 V - V_{ref}		–1.4	–2.7	mV/V
				ΔV_{KA} = 36 V - 10 V		–1	–2	mV/V
I_{ref}	Reference Input Current	See Figure 8-2	I_{KA} = 10 mA, R1 = 10kΩ, R2 = ∞			2	4	µA
$I_{I(dev)}$	Deviation of reference input current over full temperature range (1)	See Figure 8-2	I_{KA} = 10 mA, R1 = 10kΩ, R2 = ∞			0.8	2.5	µA
I_{min}	Minimum cathode current for regulation	See Figure 8-1	V_{KA} = V_{ref}			0.4	0.7	mA
I_{off}	Off-state cathode current	See Figure 8-3	V_{KA} = 36 V, V_{ref} = 0			0.1	0.5	µA
$\|Z_{KA}\|$	Dynamic Impedance (2)	See Figure 8-1	V_{KA} = V_{ref}, I_{KA} = 1 mA to 100 mA			0.2	0.5	Ω

(1) The deviation parameters $V_{I(dev)}$ and $I_{I(dev)}$ are defined as the differences between the maximum and minimum values obtained over the rated temperature range. For more details on $V_{I(dev)}$ and how it relates to the average temperature coefficient, see Temperature Coefficient.

(2) The dynamic impedance is defined by $|Z_{KA}| = \Delta V_{KA}/\Delta I_{KA}$. For more details on $|Z_{KA}|$ and how it relates to V_{KA}, see Dynamic Impedance.

Copyright © 2022 Texas Instruments Incorporated

7.6 Electrical Characteristics, TL431BQ-J, TL432BQ-J

over recommended operating conditions, T_A = 25°C (unless otherwise noted)

PARAMETER		TEST CIRCUIT	TEST CONDITIONS		MIN	TYP	MAX	UNIT
V_{ref}	Reference Voltage	See Figure 8-1	V_{KA} = V_{ref}, I_{KA} = 10 mA		2483	2495	2507	mV
$V_{I(dev)}$	Deviation of reference input voltage over full temperature range (1)	See Figure 8-1	V_{KA} = V_{ref}, I_{KA} = 10 mA			14	34	mV
ΔV_{ref} / ΔV_{KA}	Ratio of change in reference voltage to the change in cathode voltage	See Figure 8-2	I_{KA} = 10 mA	ΔV_{KA} = 10 V - V_{ref}		–1.4	–2.7	mV/V
				ΔV_{KA} = 36 V - 10 V		–1	–2	mV/V
I_{ref}	Reference Input Current	See Figure 8-2	I_{KA} = 10 mA, R1 = 10kΩ, R2 = ∞			2	4	µA
$I_{I(dev)}$	Deviation of reference input current over full temperature range (1)	See Figure 8-2	I_{KA} = 10 mA, R1 = 10kΩ, R2 = ∞			0.8	2.5	µA
I_{min}	Minimum cathode current for regulation	See Figure 8-1	V_{KA} = V_{ref}			0.4	0.7	mA
I_{off}	Off-state cathode current	See Figure 8-3	V_{KA} = 36 V, V_{ref} = 0			0.1	0.5	µA
$\|Z_{KA}\|$	Dynamic Impedance (2)	See Figure 8-1	V_{KA} = V_{ref}, I_{KA} = 1 mA to 100 mA			0.2	0.5	Ω

(1) The deviation parameters $V_{I(dev)}$ and $I_{I(dev)}$ are defined as the differences between the maximum and minimum values obtained over the rated temperature range. For more details on $V_{I(dev)}$ and how it relates to the average temperature coefficient, see Temperature Coefficient.

(2) The dynamic impedance is defined by $|Z_{KA}| = \Delta V_{KA}/\Delta I_{KA}$. For more details on $|Z_{KA}|$ and how it relates to V_{KA}, see Dynamic Impedance.

Copyright © 2022 Texas Instruments Incorporated

Typical Characteristics

Data at high and low temperatures are applicable only within the recommended operating free-air temperature ranges of the various devices.

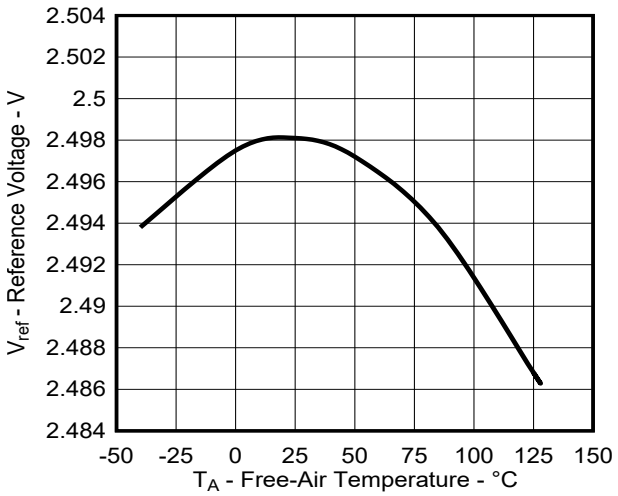

Figure 7-1. Reference Voltage vs Free-Air Temperature

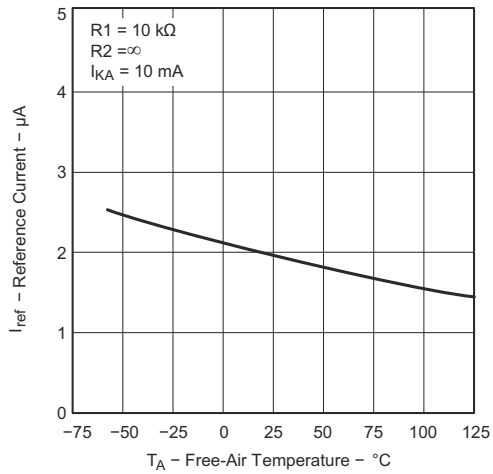

Figure 7-2. Reference Current vs Free-Air Temperature

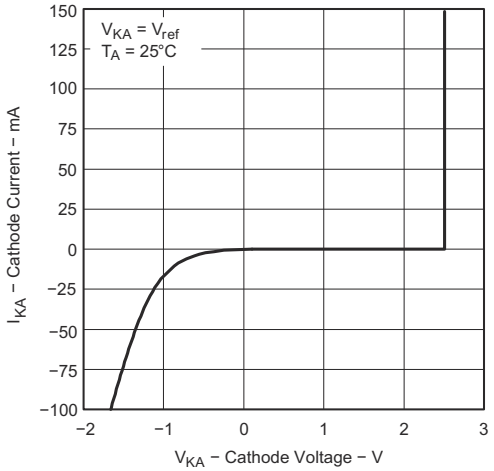

Figure 7-3. Cathode Current vs Cathode Voltage

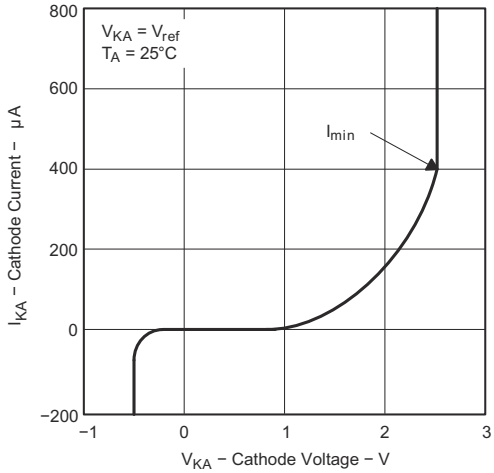

Figure 7-4. Cathode Current vs Cathode Voltage

Copyright © 2022 Texas Instruments Incorporated

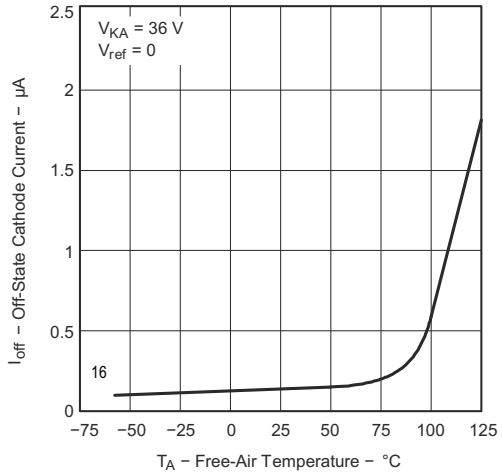

Figure 7-5. Off-State Cathode Current vs Free-Air Temperature

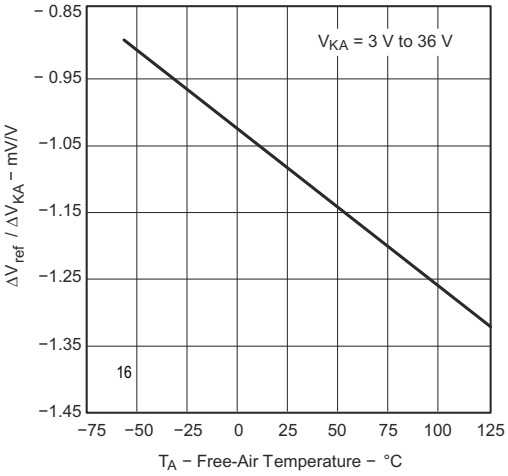

Figure 7-6. Ratio of Delta Reference Voltage to Delta Cathode Voltage vs Free-Air Temperature

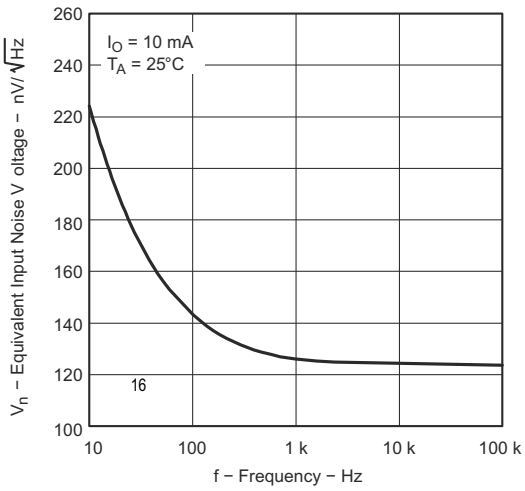

Figure 7-7. Equivalent Input Noise Voltage vs Frequency

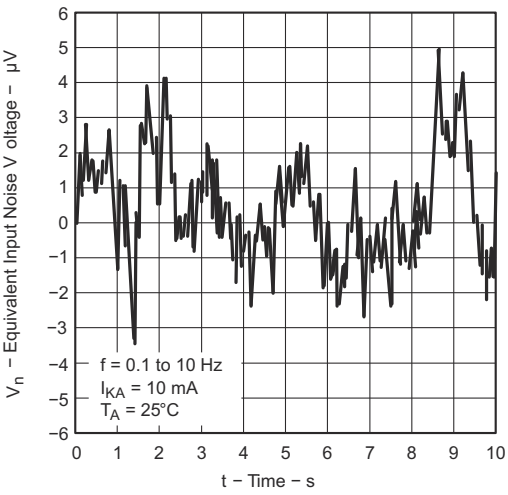

Figure 7-8. Equivalent Input Noise Voltage Over a 10-S Period

Copyright © 2022 Texas Instruments Incorporated

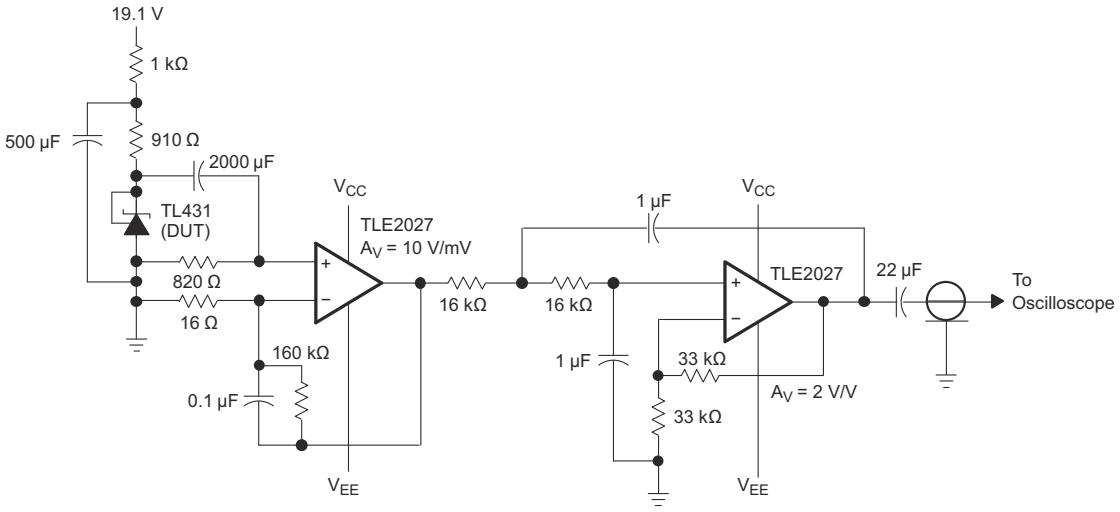

Figure 7-9. Test Circuit for Equivalent Input Noise Voltage Over a 10-S Period

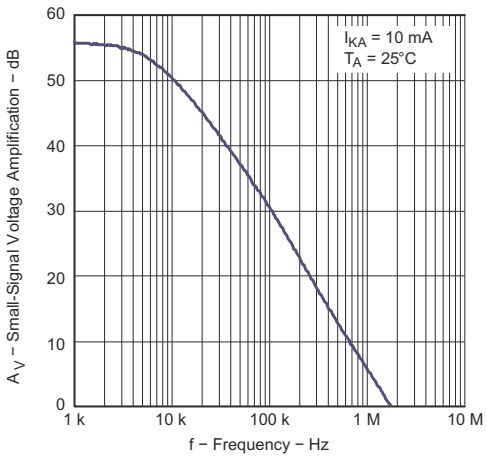

Figure 7-10. Small-Signal Voltage Amplification vs Frequency

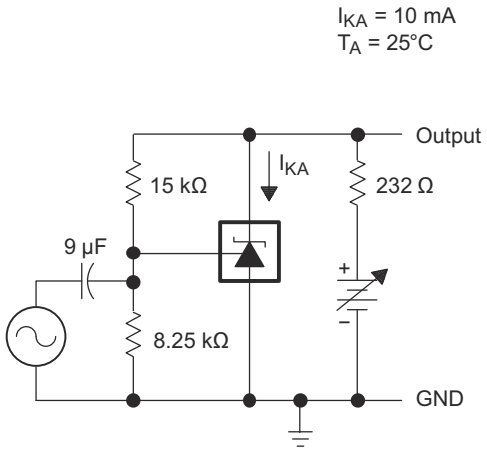

Figure 7-11. Test Circuit for Voltage Amplification

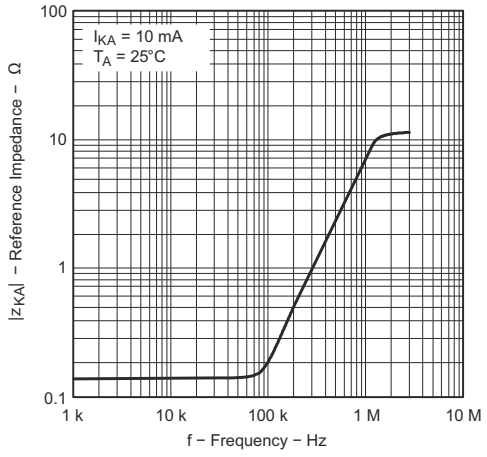

Figure 7-12. Reference Impedance vs Frequency

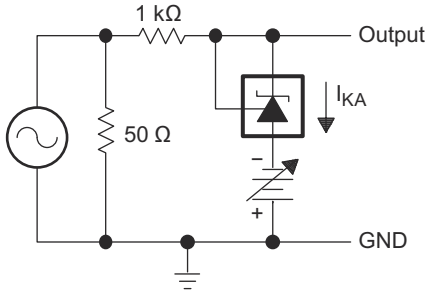

Figure 7-13. Test Circuit for Reference Impedance

Copyright © 2022 Texas Instruments Incorporated

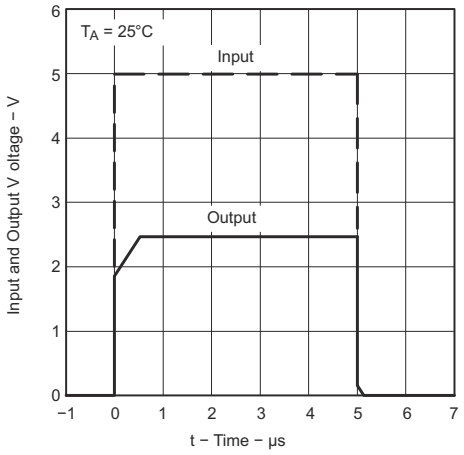

Figure 7-14. Pulse Response

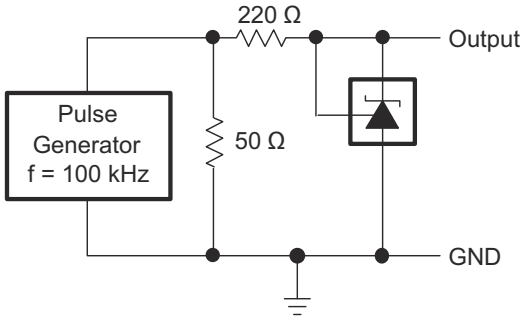

Figure 7-15. Test Circuit for Pulse Response

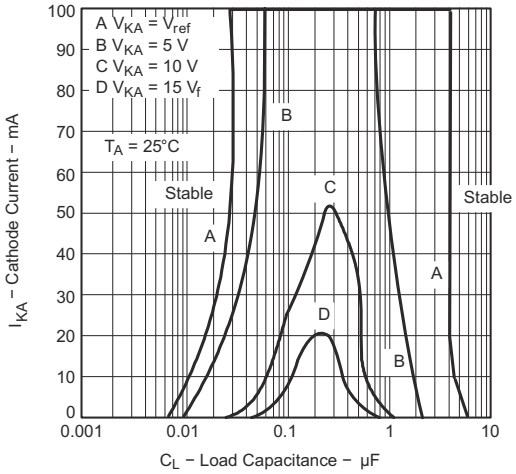

The areas under the curves represent conditions that may cause the device to oscillate. For curves B, C, and D, R2 and V+ are adjusted to establish the initial V_{KA} and I_{KA} conditions, with C_L = 0. V_{BATT} and C_L then are adjusted to determine the ranges of stability.

Figure 7-16. Stability Boundary Conditions

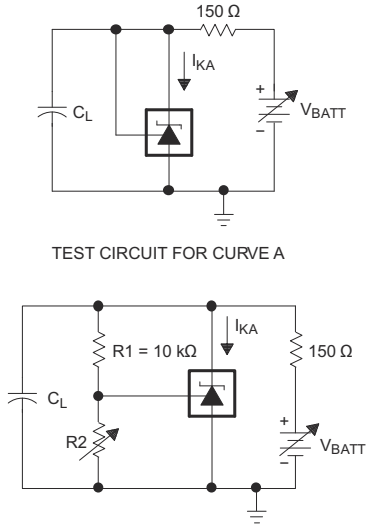

Figure 7-17. Test Circuit for Stability Boundary Conditions

Copyright © 2022 Texas Instruments Incorporated

8 Parameter Measurement Information

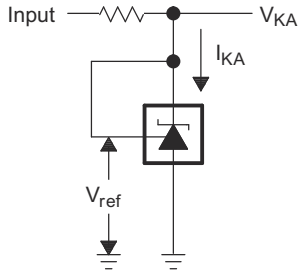

Figure 8-1. Test Circuit for $V_{KA} = V_{ref}$

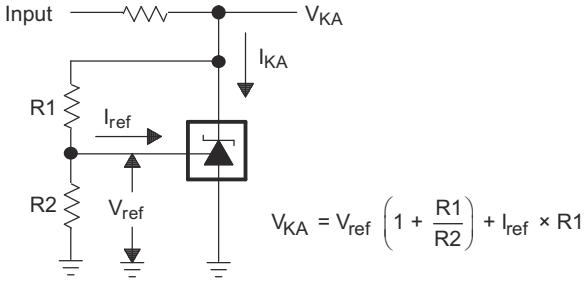

Figure 8-2. Test Circuit for $V_{KA} > V_{ref}$

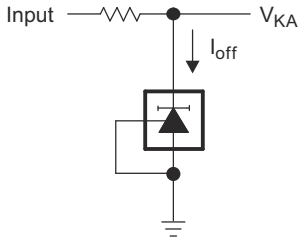

Figure 8-3. Test Circuit for I_{off}

8.1 Temperature Coefficient

The deviation of the reference voltage, V_{ref}, over the full temperature range is known as $V_{I(dev)}$. The parameter of $V_{I(dev)}$ can be used to find the temperature coefficient of the device. The average full-range temperature coefficient of the reference input voltage, α_{Vref}, is defined as:

$$\left|\alpha_{Vref}\right| \left(\frac{ppm}{°C}\right) = \frac{\left(\frac{V_{I(dev)}}{V_{ref\ at\ 25°C}}\right) \times 10^6}{\Delta T_A}$$

where:

ΔT_A is the rated operating temperature range of the device.

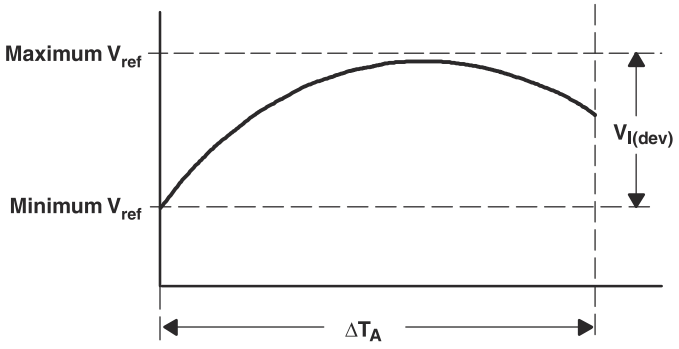

α_{Vref} is positive or negative, depending on whether minimum V_{ref} or maximum V_{ref}, respectively, occurs at the lower temperature. The full-range temperature coefficient is an average and therefore any subsection of the rated operating temperature range can yield a value that is greater or less than the average. For more details on temperature coefficient, refer to the *Voltage Reference Selection Basics White Paper*.

Copyright © 2022 Texas Instruments Incorporated

8.2 Dynamic Impedance

The dynamic impedance is defined as $|Z_{KA}| = \frac{\Delta V_{KA}}{\Delta I_{KA}}$. When the device is operating with two external resistors (see Figure 8-2), the total dynamic impedance of the circuit is given by $|z'| = \frac{\Delta V}{\Delta I}$, which is approximately equal to $|Z_{KA}|\left(1+\frac{R1}{R2}\right)$.

The V_{KA} of the device can be affected by the dynamic impedance. The device test current I_{test} for V_{KA} is specified in the *Electrical Characteristics*. Any deviation from I_{test} can cause deviation on the output V_{KA}. Figure 8-4 shows the effect of the dynamic impedance on the V_{KA}.

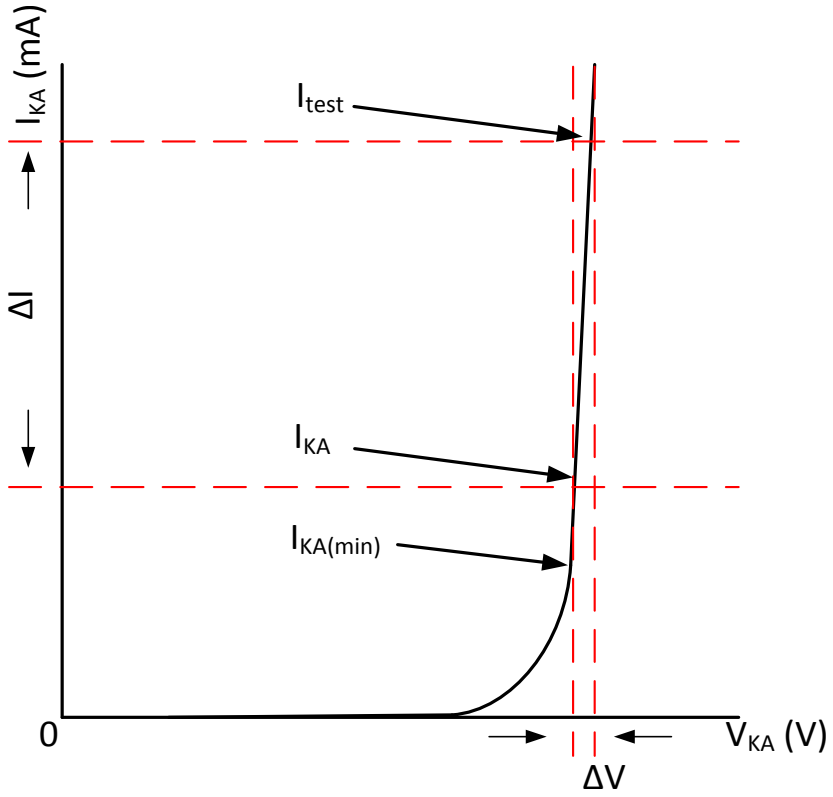

Figure 8-4. Dynamic Impedance

Copyright © 2022 Texas Instruments Incorporated

9 Detailed Description

9.1 Overview

This standard device has proven ubiquity and versatility across a wide range of applications, ranging from power to signal path. This is due to it's key components containing an accurate voltage reference & opamp, which are very fundamental analog building blocks. TL43xJ is used in conjunction with it's key components to behave as a single voltage reference, error amplifier, voltage clamp or comparator with integrated reference.

TL43xJ can be operated and adjusted to cathode voltages from 2.5V to 36V, making this part optimum for a wide range of end equipments in industrial, auto, telecom & computing. In order for this device to behave as a shunt regulator or error amplifier, >0.7mA (I_{min}(max)) must be supplied in to the cathode pin. Under this condition, feedback can be applied from the Cathode and Ref pins to create a replica of the internal reference voltage.

Various reference voltage options can be purchased with initial tolerances (at 25°C) of 0.5%, and 1%. These reference options are denoted by B (0.5%) and A (1.0%) after the TL431J or TL432J. TL431J & TL432J are both functionaly similar, but have separate pinout options.

9.2 Functional Block Diagram

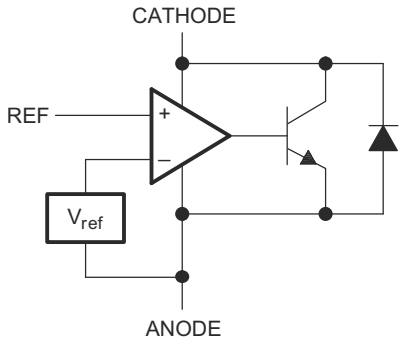

Figure 9-1. Equivalent Schematic

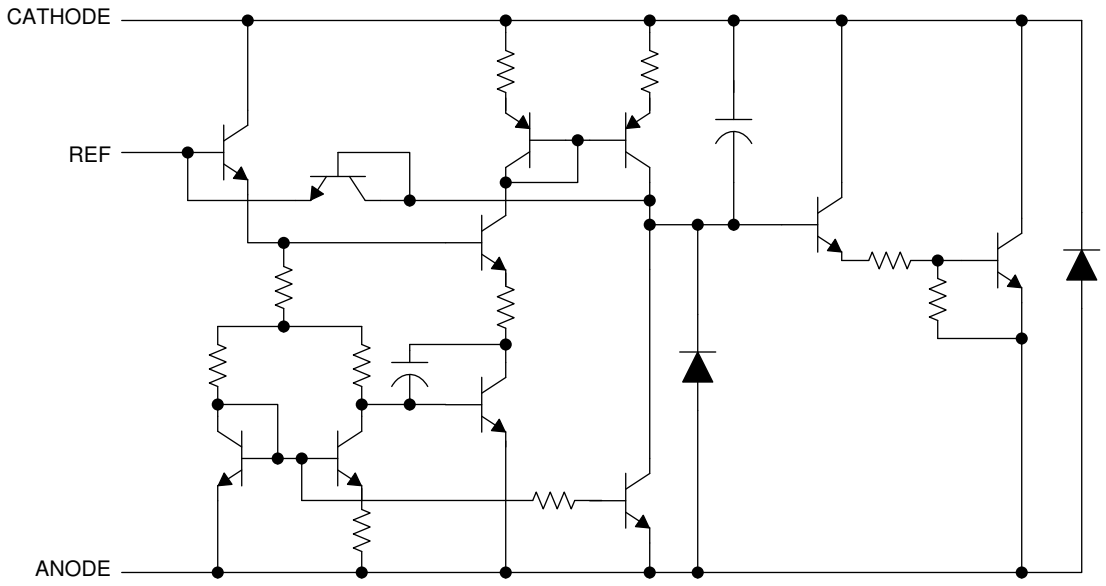

Figure 9-2. Detailed Schematic

Copyright © 2022 Texas Instruments Incorporated

9.3 Feature Description

TL431J & TL432J family of devices consists of an internal reference and amplifier that outputs a sink current base on the difference between the reference pin and the virtual internal pin. The sink current is produced by the internal Darlington pair, shown in the above schematic (Figure 9-2). A Darlington pair is used in order for this device to be able to sink a maximum current of 100 mA.

When operated with enough voltage headroom (≥ 2.5 V) and cathode current (I_{KA}), TL431J forces the reference pin to 2.5 V. However, the reference pin can not be left floating, as it needs I_{REF} ≥ 2.5µA (please see Electrical Characteristics). This is because the reference pin is driven into an npn, which needs base current in order operate properly.

When feedback is applied from the Cathode and Reference pins, TL43xJ behaves as a Zener diode, regulating to a constant voltage dependent on current being supplied into the cathode. This is due to the internal amplifier and reference entering the proper operating regions. The same amount of current needed in the above feedback situation must be applied to this device in open loop, servo or error amplifying implementations in order for it to be in the proper linear region giving TL43xJ enough gain.

Unlike many linear regulators, TL43xJ is internally compensated to be stable without an output capacitor between the cathode and anode. However, if it is desired to use an output capacitor Figure 7-16 can be used as a guide to assist in choosing the correct capacitor to maintain stability.

9.4 Device Functional Modes

9.4.1 Open Loop (Comparator)

When the cathode/output voltage or current of TL43xJ is not being fed back to the reference/input pin in any form, this device is operating in open loop. With proper cathode current (Ika) applied to this device, TL43xJ will have the characteristics shown in Figure 9-1. With such high gain in this configuration, TL43xJ is typically used as a comparator. With the reference integrated makes TL43xJ the prefered choice when users are trying to monitor a certain level of a single signal.

9.4.2 Closed Loop

When the cathode/output voltage or current of TL43xJ is being fed back to the reference/input pin in any form, this device is operating in closed loop. The majority of applications involving TL43xJ use it in this manner to regulate a fixed voltage or current. The feedback enables this device to behave as an error amplifier, computing a portion of the output voltage and adjusting it to maintain the desired regulation. This is done by relating the output voltage back to the reference pin in a manner to make it equal to the internal reference voltage, which can be accomplished via resistive or direct feedback.

Copyright © 2022 Texas Instruments Incorporated

10 Applications and Implementation

Note

Information in the following applications sections is not part of the TI component specification, and TI does not warrant its accuracy or completeness. TI's customers are responsible for determining suitability of components for their purposes. Customers should validate and test their design implementation to confirm system functionality.

10.1 Application Information

As this device has many applications and setups, there are many situations that this datasheet can not characterize in detail. The linked application notes will help the designer make the best choices when using this part.

Application note *Understanding Stability Boundary Conditions Charts in TL431, TL432 Data Sheet* (SLVA482) will provide a deeper understanding of this devices stability characteristics and aid the user in making the right choices when choosing a load capacitor. Application note *Setting the Shunt Voltage on an Adjustable Shunt Regulator* (SLVA445) assists designers in setting the shunt voltage to achieve optimum accuracy for this device.

10.2 Typical Applications

10.2.1 Comparator With Integrated Reference

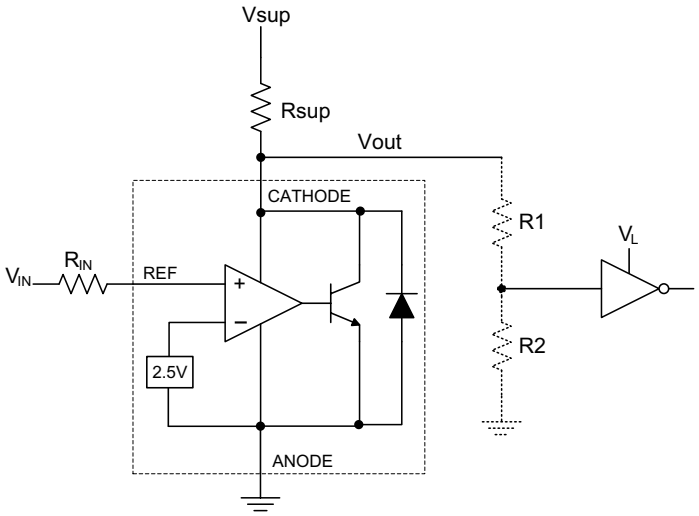

Figure 10-1. Comparator Application Schematic

10.2.1.1 Design Requirements

For this design example, use the parameters listed in *Table 10-1* as the input parameters.

Table 10-1. Design Parameters

DESIGN PARAMETER	EXAMPLE VALUE
Input Voltage Range	0 V to 5 V
Input Resistance	10 kΩ
Supply Voltage	24 V
Cathode Current (Ik)	5 mA
Output Voltage Level	~2 V – V_{SUP}
Logic Input Thresholds VIH/VIL	V_L

10.2.1.2 Detailed Design Procedure

When using TL431J as a comparator with reference, determine the following:

- Input Voltage Range
- Reference Voltage Accuracy
- Output logic input high and low level thresholds
- Current Source resistance

10.2.1.2.1 Basic Operation

In the configuration shown in Figure 10-1 TL43xJ will behave as a comparator, comparing the V_{REF} pin voltage to the internal virtual reference voltage. When provided a proper cathode current (I_K), TL43xJ will have enough open loop gain to provide a quick response.

10.2.1.2.1.1 Overdrive

Slow or inaccurate responses can also occur when the reference pin is not provided enough overdrive voltage. This is the amount of voltage that is higher than the internal virtual reference. The internal virtual reference voltage will be within the range of 2.5 V ±(0.5%, 1.0% or 1.5%) depending on which version is being used. The more overdrive voltage provided, the faster the TL431 will respond.

For applications where TL431J is being used as a comparator, it is best to set the trip point to greater than the positive expected error (i.e. +1.0% for the A version). For fast response, setting the trip point to >10% of the internal V_{REF} should suffice.

For minimal voltage drop or difference from Vin to the ref pin, it is recommended to use an input resistor <10kΩ to provide Iref.

Copyright © 2022 Texas Instruments Incorporated

10.2.1.2.2 Output Voltage and Logic Input Level

In order for TL431J to properly be used as a comparator, the logic output must be readable by the receiving logic device. This is accomplished by knowing the input high and low level threshold voltage levels, typically denoted by V_{IH} & V_{IL}.

TL431J's output low level voltage in open-loop/comparator mode is ~2 V, which is typically sufficient for 5V supplied logic. However, would not work for 3.3 V & 1.8 V supplied logic. In order to accomodate this a resistive divider can be tied to the output to attenuate the output voltage to a voltage legible to the receiving low voltage logic device.

TL431J's output high voltage is equal to V_{SUP} due to TL431J being open-collector. If V_{SUP} is much higher than the receiving logic's maximum input voltage tolerance, the output must be attenuated to accomadate the outgoing logic's reliability.

When using a resistive divider on the output, be sure to make the sum of the resistive divider (R1 & R2 in Figure 10-1) is much greater than R_{SUP} in order to not interfere with TL431's ability to pull close to V_{SUP} when turning off.

10.2.1.2.2.1 Input Resistance

TL431J requires an input resistance in this application in order to source the reference current (I_{REF}) needed from this device to be in the proper operating regions while turing on. The actual voltage seen at the ref pin will be $V_{REF}=V_{IN}-I_{REF}*R_{IN}$. Since I_{REF} can be as high as 4 µA it is recommended to use a resistance small enough that will mitigate the error that I_{REF} creates from V_{IN}.

Copyright © 2022 Texas Instruments Incorporated

10.2.2 Shunt Regulator/Reference

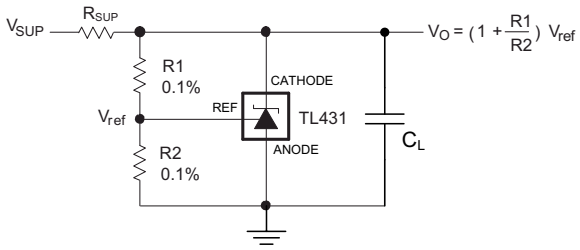

Figure 10-2. Shunt Regulator Schematic

10.2.2.1 Design Requirements

For this design example, use the parameters listed in Table 10-1 as the input parameters.

Table 10-2. Design Parameters

DESIGN PARAMETER	EXAMPLE VALUE
Reference Initial Accuracy	1.0 %
Supply Voltage	24 V
Cathode Current (Ik)	5 mA
Output Voltage Level	2.5 V - 36 V
Load Capacitance	10 µF
Feedback Resistor Values and Accuracy (R1 & R2)	10 kΩ

10.2.2.2 Detailed Design Procedure

When using TL431J as a Shunt Regulator, determine the following:

- Input Voltage Range
- Temperature Range
- Total Accuracy
- Cathode Current
- Reference Initial Accuracy
- Output Capacitance

10.2.2.2.1 Programming Output/Cathode Voltage

In order to program the cathode voltage to a regulated voltage a resistive bridge must be shunted between the cathode and anode pins with the mid point tied to the reference pin. This can be seen in Figure 10-2, with R1 & R2 being the resistive bridge. The cathode/output voltage in the shunt regulator configuration can be approximated by the equation shown in Figure 10-2. The cathode voltage can be more accuratel determined by taking in to account the cathode current:

$Vo=(1+R1/R2)*V_{REF}-I_{REF}*R1$

In order for this equation to be valid, TL43xJ must be fully biased so that it has enough open loop gain to mitigate any gain error. This can be done by meeting the Imin spec denoted in *Section 7.5*.

Copyright © 2022 Texas Instruments Incorporated

10.2.2.2.2 Total Accuracy

When programming the output above unity gain (V_{KA}=V_{REF}), TL43xJ is susceptible to other errors that may effect the overall accuracy beyond V_{REF}. These errors include:

- R1 and R2 accuracies
- $V_{I(dev)}$ - Change in reference voltage over temperature
- ΔV_{REF} / ΔV_{KA} - Change in reference voltage to the change in cathode voltage
- $|z_{KA}|$ - Dynamic impedance, causing a change in cathode voltage with cathode current

Worst case cathode voltage can be determined taking all of the variables in to account. Application note *Setting the Shunt Voltage on an Adjustable Shunt Regulator* (SLVA445) assists designers in setting the shunt voltage to achieve optimum accuracy for this device.

10.2.2.2.3 Stability

Though TL43xJ is stable with no capacitive load, the device that receives the shunt regulator's output voltage could present a capacitive load that is within the TL43xJ region of stability, shown in Figure 7-16. Also, designers may use capacitive loads to improve the transient response or for power supply decoupling. When using additional capacitance between Cathode and Anode, refer to Figure 7-16. Also, application note *Understanding Stability Boundary Conditions Charts in TL431, TL432 Data Sheet* (SLVA482) will provide a deeper understanding of this devices stability characteristics and aid the user in making the right choices when choosing a load capacitor.

10.2.2.2.4 Start-Up Time

As shown in Figure 10-3, TL43xJ has a fast response up to ~2 V and then slowly charges to it's programmed value. This is due to the compensation capacitance (shown in Figure 9-2) the TL43xJ has to meet it's stability criteria. Despite the secondary delay, TL43xJ still has a fast response suitable for many clamp applications.

10.2.2.3 Application Curve

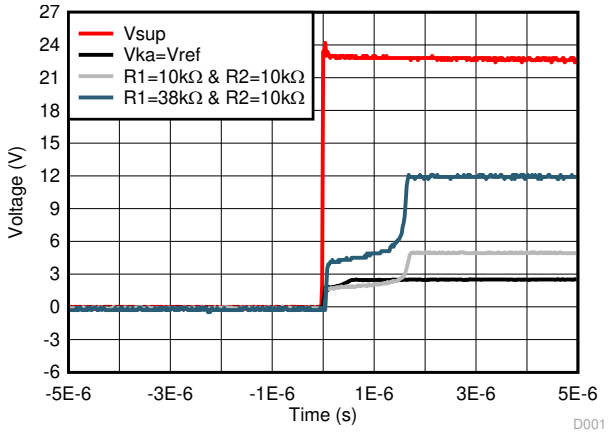

Figure 10-3. TL43xJ Start-Up Response

10.3 System Examples

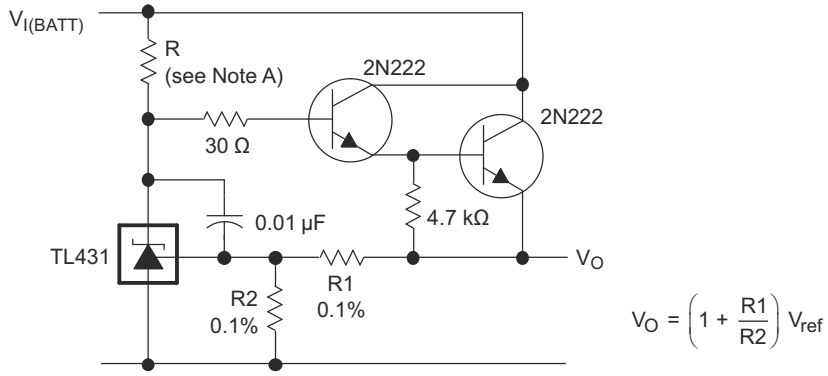

A. R should provide cathode current ≥1 mA to the TL431J at minimum $V_{(BATT)}$.

Figure 10-4. Precision High-Current Series Regulator

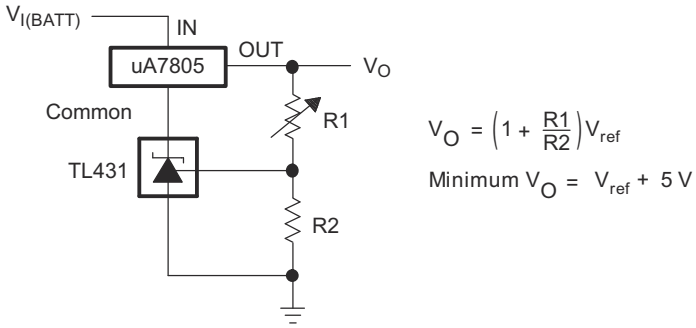

Figure 10-5. Output Control of a Three-Terminal Fixed Regulator

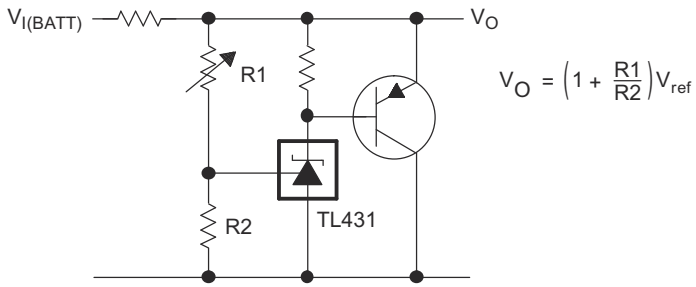

Figure 10-6. High-Current Shunt Regulator

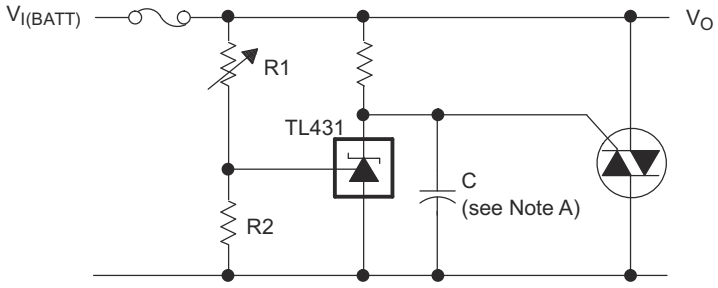

A. Refer to the stability boundary conditions in Figure 7-16 to determine allowable values for C.

Figure 10-7. Crowbar Circuit

Copyright © 2022 Texas Instruments Incorporated

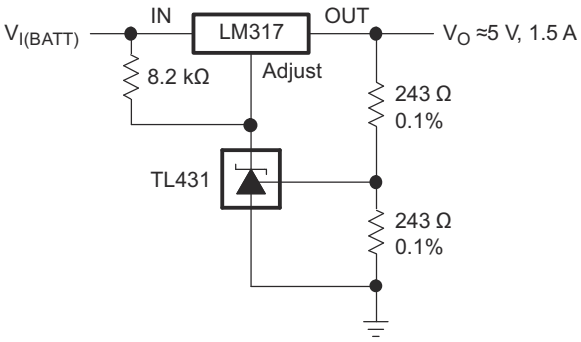

Figure 10-8. Precision 5-V, 1.5-A Regulator

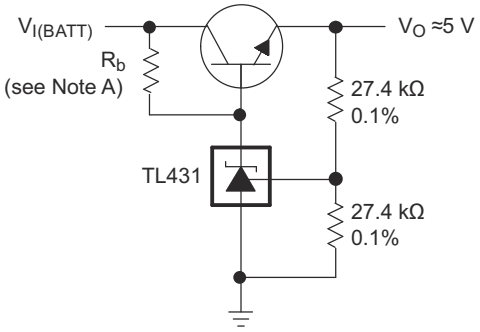

A. R_b should provide cathode current ≥1 mA to the TL431J.

Figure 10-9. Efficient 5-V Precision Regulator

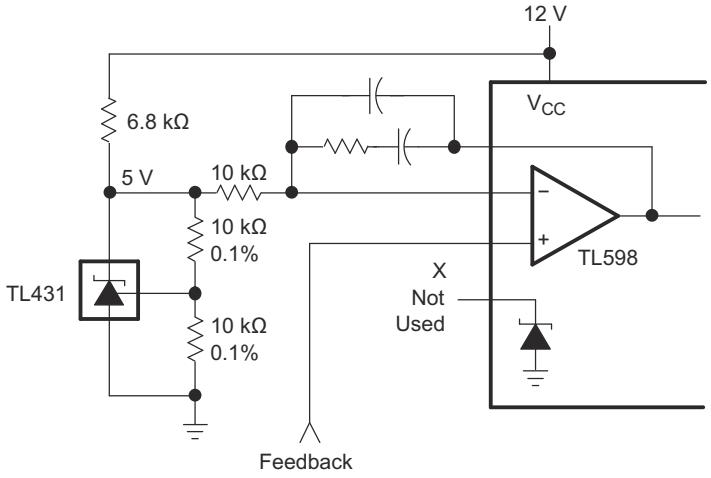

Figure 10-10. PWM Converter With Reference

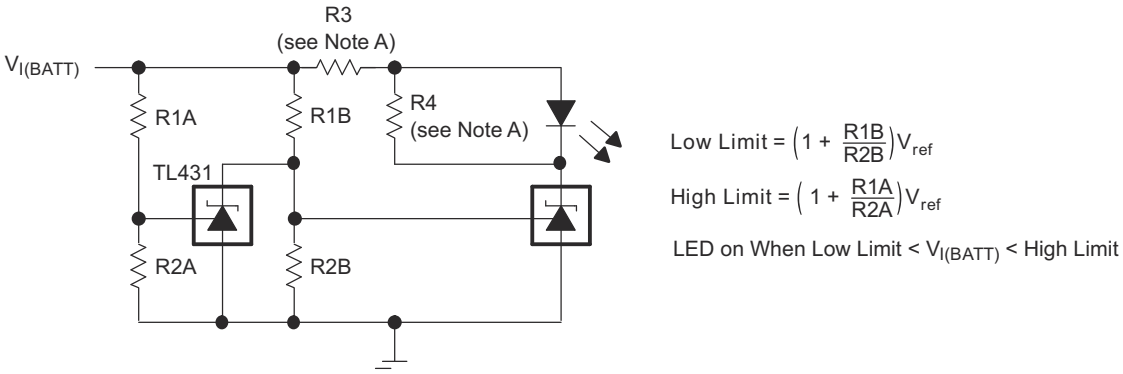

A. Select R3 and R4 to provide the desired LED intensity and cathode current ≥1 mA to the TL431J at the available $V_{I(BATT)}$.

Figure 10-11. Voltage Monitor

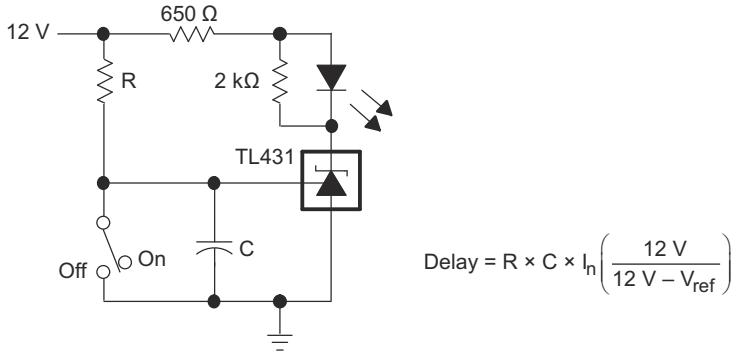

Figure 10-12. Delay Timer

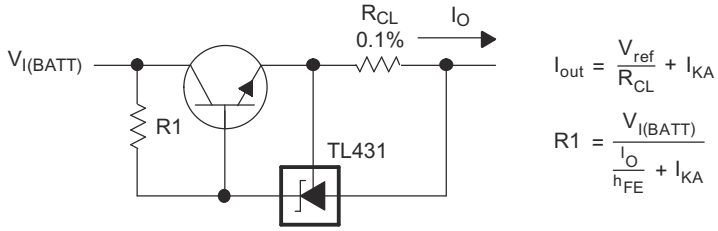

Figure 10-13. Precision Current Limiter

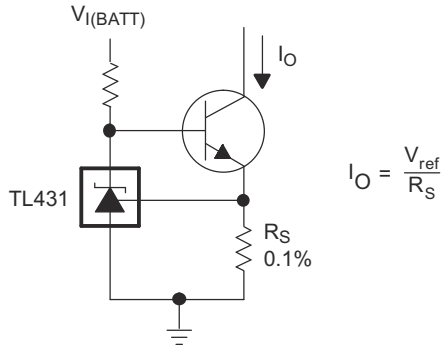

Figure 10-14. Precision Constant-Current Sink

Copyright © 2022 Texas Instruments Incorporated

11 Power Supply Recommendations

When using TL43xJ as a Linear Regulator to supply a load, designers will typically use a bypass capacitor on the output/cathode pin. When doing this, be sure that the capacitance is within the stability criteria shown in Figure 7-16.

In order to not exceed the maximum cathode current, be sure that the supply voltage is current limited. Also, be sure to limit the current being driven into the Ref pin, as not to exceed it's absolute maximum rating.

For applications shunting high currents, pay attention to the cathode and anode trace lengths, adjusting the width of the traces to have the proper current density.

Copyright © 2022 Texas Instruments Incorporated

TI Confidential - NDA Restrictions

12 Layout

12.1 Layout Guidelines

Bypass capacitors should be placed as close to the part as possible. Current-carrying traces need to have widths appropriate for the amount of current they are carrying; in the case of the TL43xJ, these currents will be low.

12.2 Layout Example

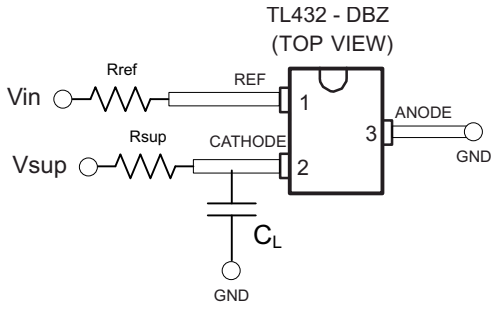

Figure 12-1. DBZ Layout Example

Copyright © 2022 Texas Instruments Incorporated

13 Device and Documentation Support

13.1 Device Nomenclature

TI assigns suffixes and prefixes to differentiate all the combinations of the TL43x family. The Eco Plan designator is a legacy designator that was used to differentiate Pb-free and Green devices. More details and possible orderable combinations are located on the Package Option Addendum in Section 14.

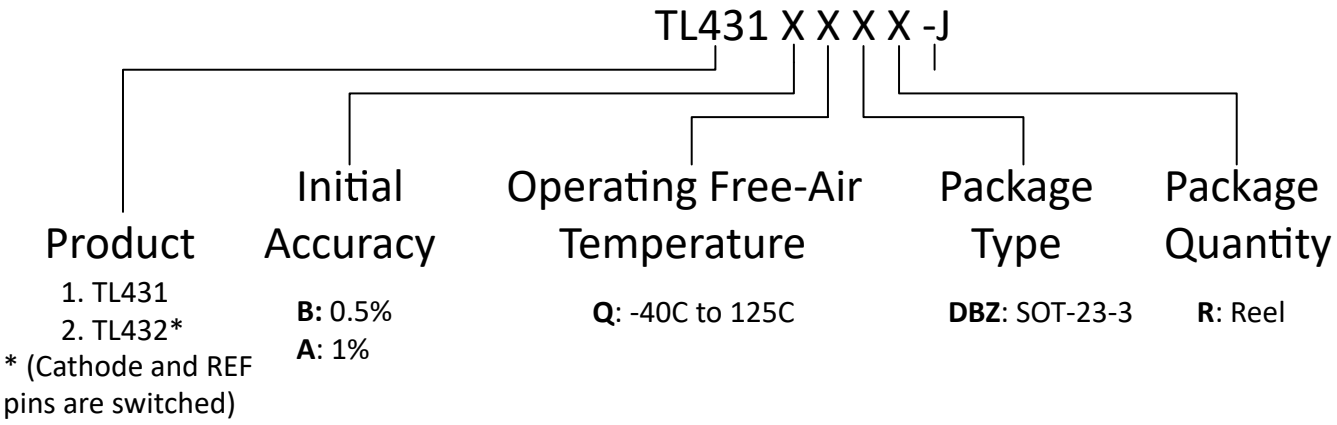

13.2 Receiving Notification of Documentation Updates

To receive notification of documentation updates, navigate to the device product folder on ti.com. Click on *Subscribe to updates* to register and receive a weekly digest of any product information that has changed. For change details, review the revision history included in any revised document.

13.3 Support Resources

TI E2E™ support forums are an engineer's go-to source for fast, verified answers and design help — straight from the experts. Search existing answers or ask your own question to get the quick design help you need.

Linked content is provided "AS IS" by the respective contributors. They do not constitute TI specifications and do not necessarily reflect TI's views; see TI's Terms of Use.

13.4 Trademarks

TI E2E™ is a trademark of Texas Instruments.
All trademarks are the property of their respective owners.

13.5 Electrostatic Discharge Caution



This integrated circuit can be damaged by ESD. Texas Instruments recommends that all integrated circuits be handled with appropriate precautions. Failure to observe proper handling and installation procedures can cause damage.

ESD damage can range from subtle performance degradation to complete device failure. Precision integrated circuits may be more susceptible to damage because very small parametric changes could cause the device not to meet its published specifications.

13.6 Glossary

TI Glossary	This glossary lists and explains terms, acronyms, and definitions.

14 Mechanical, Packaging, and Orderable Information

The following pages include mechanical packaging and orderable information. This information is the most current data available for the designated devices. This data is subject to change without notice and revision of this document. For browser based versions of this data sheet, refer to the left hand navigation.

Copyright © 2022 Texas Instruments Incorporated



PACKAGE OUTLINE

DBZ0003A

SOT-23 - 1.12 mm max height

SMALL OUTLINE TRANSISTOR

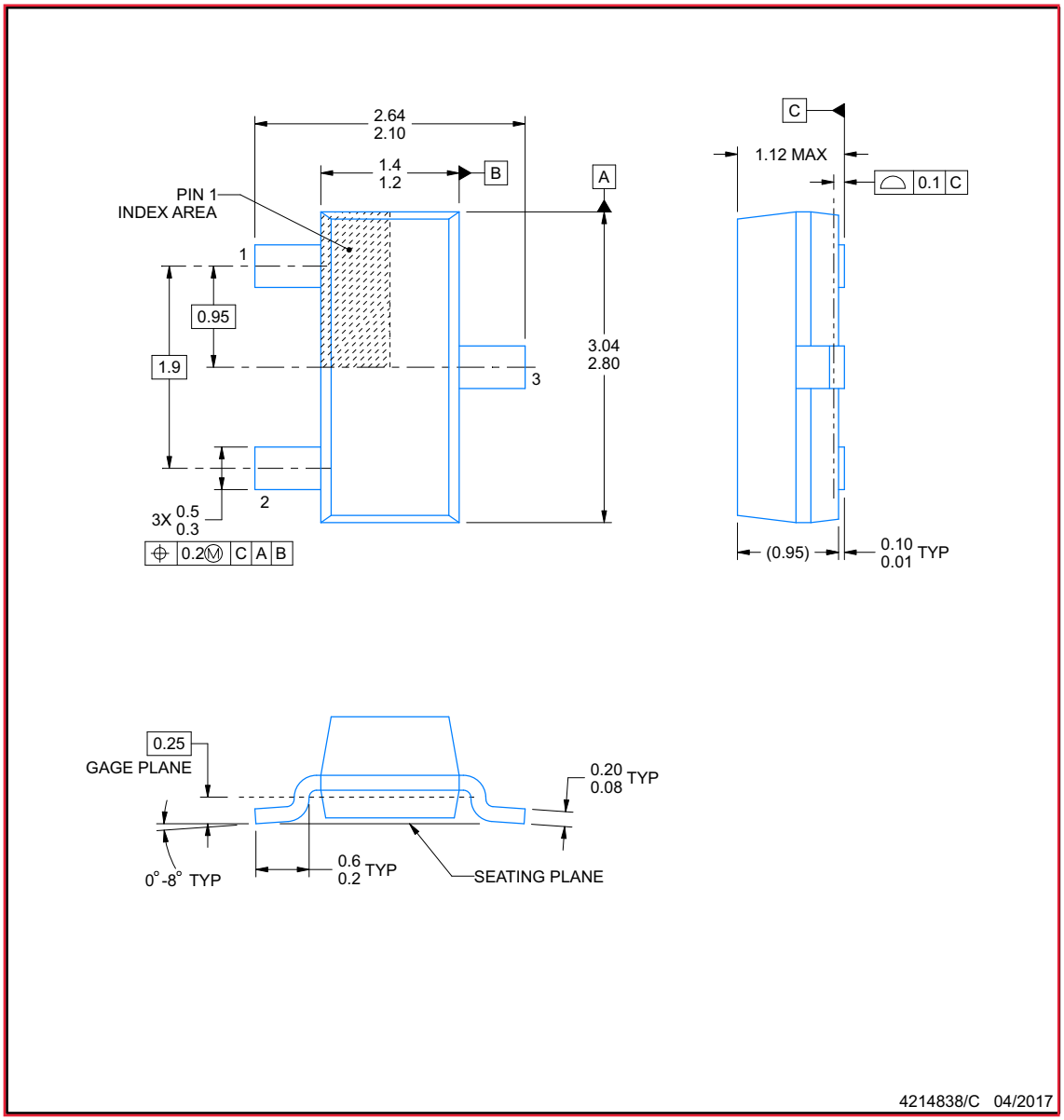

4214838/C 04/2017

NOTES:

1. All linear dimensions are in millimeters. Any dimensions in parenthesis are for reference only. Dimensioning and tolerancing per ASME Y14.5M.
2. This drawing is subject to change without notice.
3. Reference JEDEC registration TO-236, except minimum foot length.

Copyright © 2022 Texas Instruments Incorporated

EXAMPLE BOARD LAYOUT

DBZ0003A

SOT-23 - 1.12 mm max height

SMALL OUTLINE TRANSISTOR

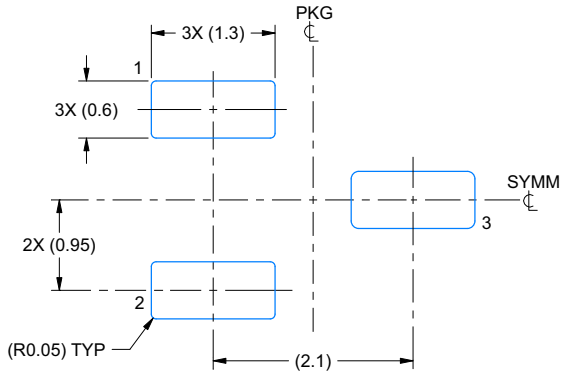

LAND PATTERN EXAMPLE
SCALE:15X

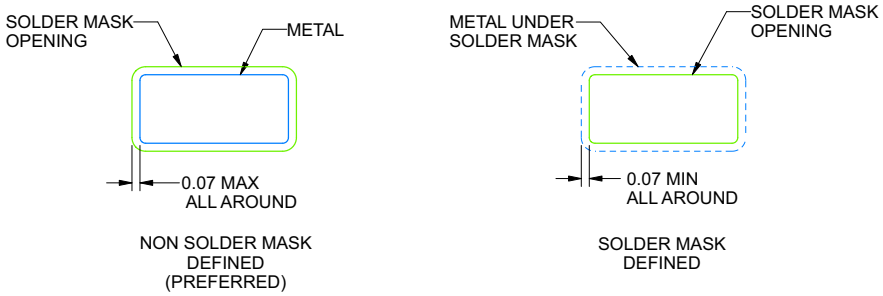

SOLDER MASK DETAILS

4214838/C 04/2017

NOTES: (continued)

4. Publication IPC-7351 may have alternate designs.
5. Solder mask tolerances between and around signal pads can vary based on board fabrication site.

Copyright © 2022 Texas Instruments Incorporated

EXAMPLE STENCIL DESIGN

DBZ0003A

SOT-23 - 1.12 mm max height

SMALL OUTLINE TRANSISTOR

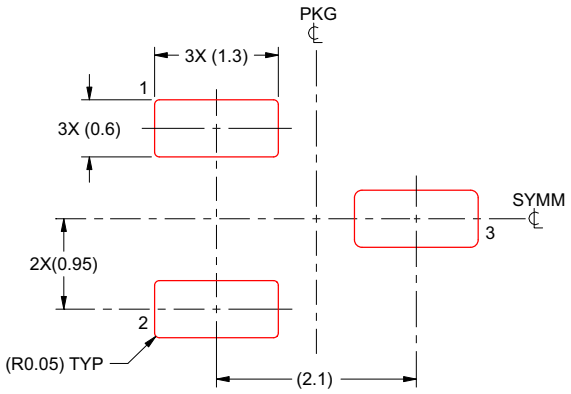

SOLDER PASTE EXAMPLE
BASED ON 0.125 THICK STENCIL
SCALE:15X

4214838/C 04/2017

NOTES: (continued)

6. Laser cutting apertures with trapezoidal walls and rounded corners may offer better paste release. IPC-7525 may have alternate design recommendations.
7. Board assembly site may have different recommendations for stencil design.

Copyright © 2022 Texas Instruments Incorporated

15 Package Option Addendum

Packaging Information

Orderable Device	Status	Package Type	Package Drawing	Pins	Package Qty	Eco Plan	Lead/Ball Finish	MSL Peak Temp	Op Temp (°C)	Device Marking
TL431AQDBZR-J	ACTIVE	SOT-23	DBZ	3	3000	RoHS & Green	SN	Level-1-260C-UNLIM	-40 to 125	2TPB
TL431BQDBZR-J	ACTIVE	SOT-23	DBZ	3	3000	RoHS & Green	SN	Level-1-260C-UNLIM	-40 to 125	2TOB
TL432AQDBZR-J	ACTIVE	SOT-23	DBZ	3	3000	RoHS & Green	SN	Level-1-260C-UNLIM	-40 to 125	2TRB
TL432BQDBZR-J	ACTIVE	SOT-23	DBZ	3	3000	RoHS & Green	SN	Level-1-260C-UNLIM	-40 to 125	2TQB

Important Information and Disclaimer: The information provided on this page represents TI's knowledge and belief as of the date that it is provided. TI bases its knowledge and belief on information provided by third parties, and makes no representation or warranty as to the accuracy of such information. Efforts are underway to better integrate information from third parties. TI has taken and continues to take reasonable steps to provide representative and accurate information but may not have conducted destructive testing or chemical analysis on incoming materials and chemicals. TI and TI suppliers consider certain information to be proprietary, and thus CAS numbers and other limited information may not be available for release.

In no event shall TI's liability arising out of such information exceed the total purchase price of the TI part(s) at issue in this document sold by TI to Customer on an annual basis.

IMPORTANT NOTICE AND DISCLAIMER

TI PROVIDES TECHNICAL AND RELIABILITY DATA (INCLUDING DATA SHEETS), DESIGN RESOURCES (INCLUDING REFERENCE DESIGNS), APPLICATION OR OTHER DESIGN ADVICE, WEB TOOLS, SAFETY INFORMATION, AND OTHER RESOURCES “AS IS” AND WITH ALL FAULTS, AND DISCLAIMS ALL WARRANTIES, EXPRESS AND IMPLIED, INCLUDING WITHOUT LIMITATION ANY IMPLIED WARRANTIES OF MERCHANTABILITY, FITNESS FOR A PARTICULAR PURPOSE OR NON-INFRINGEMENT OF THIRD PARTY INTELLECTUAL PROPERTY RIGHTS.

These resources are intended for skilled developers designing with TI products. You are solely responsible for (1) selecting the appropriate TI products for your application, (2) designing, validating and testing your application, and (3) ensuring your application meets applicable standards, and any other safety, security, regulatory or other requirements.

These resources are subject to change without notice. TI grants you permission to use these resources only for development of an application that uses the TI products described in the resource. Other reproduction and display of these resources is prohibited. No license is granted to any other TI intellectual property right or to any third party intellectual property right. TI disclaims responsibility for, and you will fully indemnify TI and its representatives against, any claims, damages, costs, losses, and liabilities arising out of your use of these resources.

TI’s products are provided subject to TI’s Terms of Sale or other applicable terms available either on ti.com or provided in conjunction with such TI products. TI’s provision of these resources does not expand or otherwise alter TI’s applicable warranties or warranty disclaimers for TI products.

TI objects to and rejects any additional or different terms you may have proposed.

Mailing Address: Texas Instruments, Post Office Box 655303, Dallas, Texas 75265
Copyright © 2022, Texas Instruments Incorporated