QISDA USE ONLY / DO NOT DISTRIBUTE

MP3398D

4-String, Max 350mA/String, Step-Up, White LED Controller with Analog and PWM Dimming

DESCRIPTION

The MP3398D is a step-up controller with four current channels designed to drive WLED arrays for large LCD panel backlighting applications. The MP3398D allows for flexible expansion of the number of LED channels by two or more ICs in parallel sharing a single inductive power source.

The MP3398D employs peak-current mode with a fixed switching frequency. The frequency is programmable by an external setting resistor. The MP3398D drives an external MOSFET to boost up the output voltage from a 5V to 28V input supply and can regulate the current in each LED string to the value set by an external current-setting resistor.

The MP3398D applies four internal current sources for current balancing. The current matching can achieve 2.5% regulation accuracy between strings. The low regulation voltage on the LED current sources reduces power loss.

The MP3398D can support both analog and PWM dimming independently to meet different dimming mode requests. Full protection features include over-current protection (OCP), over-temperature protection (OTP), under-voltage protection (UVP), over-voltage protection (OVP), LED short/open protection, and inductor/diode short protection.

The MP3398D is available in SOIC16 and SOIC20 packages.

FEATURES

- 4-String, 350mA/String Max WLED Driver
- 5V-to-28V Input Voltage Range
- 2.5% Current Matching Accuracy between Strings
- Programmable Switching Frequency
- PWM and Analog Dimming Mode
- Cascading Capability with a Single Power Source
- LED Open and Short LED Protection
- Programmable Over-Voltage Protection (OVP)
- Recoverable Thermal Shutdown
- Over-Current Protection (OCP)
- Inductor/Diode Short Protection
- Under-Voltage Lockout (UVLO)
- Available in SOIC16 and SOIC20 Packages

APPLICATIONS

- Desktop LCD Flat-Panel Displays
- Flat-Panel Video Displays
- 2D/3D LCD TVs and Monitors

All MPS parts are lead-free, halogen-free, and adhere to the RoHS directive. For MPS green status, please visit the MPS website under Quality Assurance. “MPS” and “The Future of Analog IC Technology” are registered trademarks of Monolithic Power Systems, Inc.

TYPICAL APPLICATION

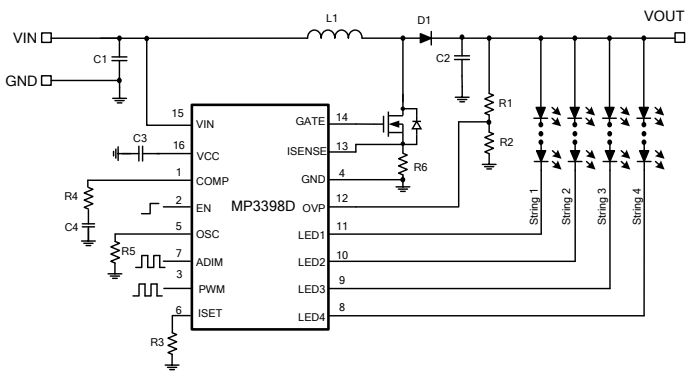

MPS Proprietary Information. Patent Protected. Unauthorized Photocopy and Duplication Prohibited.
© 2016 MPS. All Rights Reserved.

QISDA USE ONLY / DO NOT DISTRIBUTE

ORDERING INFORMATION

Part Number	Package	Top Marking
MP3398DGS*	SOIC16	*See Below*
MP3398DGY**	SOIC20	

* For Tape & Reel, add suffix –Z (e.g. MP3398DGS–Z)
** For Tape & Reel, add suffix –Z (e.g. MP3398DGY–Z)

TOP MARKING (MP3398DGS)

MPSYYWW
MP3398D
LLLLLLLLL

MPS: MPS prefix
YY: Year code
WW: Week code
MP3398D: Part number
LLLLLLLLL: Lot number

PACKAGE REFERENCE

TOP VIEW

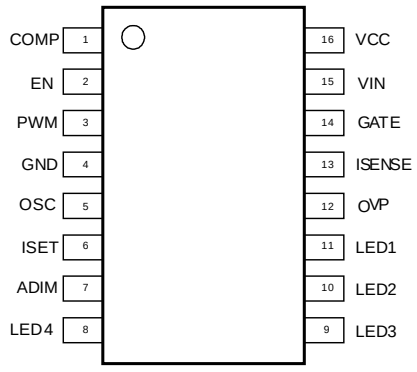

SOIC16

TOP VIEW

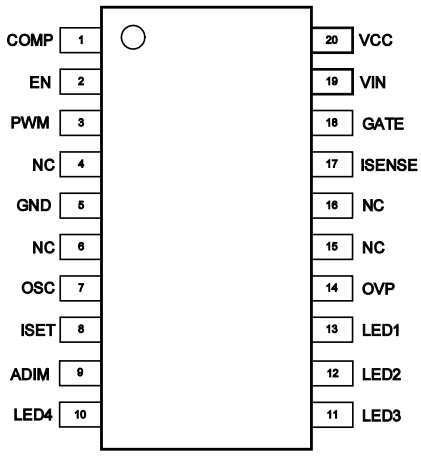

SOIC20

MPS Proprietary Information. Patent Protected. Unauthorized Photocopy and Duplication Prohibited.
© 2016 MPS. All Rights Reserved.

QISDA USE ONLY / DO NOT DISTRIBUTE

ABSOLUTE MAXIMUM RATINGS (1)

VIN ..... -0.3V to +30V
V_{GATE} ..... -0.3V to +6.5V
VCC ..... -0.3V to +6.8V
V_{LED1} to V_{LED4} ..... -1V to +55V
V_{ISENSE} ..... -0.5V to +6.5V
All other pins ..... -0.3V to VCC
Continuous power dissipation (T_A = 25°C) (2)
SOIC16 ..... 1.56W
SOIC20 ..... 1.74W
Junction temperature ..... 150°C
Lead temperature ..... 260°C
ESD capability human body mode (all pins) 3.5kV

Recommended Operating Conditions (3)

Supply voltage (VIN) ..... 5V to 28V
LED current (backlight) ..... 10mA to 350mA
Operating junction temp. (T_J). .. -40°C to +125°C

Thermal Resistance (4)

	θ_{JA}	θ_{JC}	
SOIC16	80	35	°C/W
SOIC20	72	30	°C/W

NOTES:

1) Exceeding these ratings may damage the device. The voltage is measured with a 20MHz bandwidth limited oscilloscope.
2) The maximum allowable power dissipation is a function of the maximum junction temperature T_J (MAX), the junction-to-ambient thermal resistance θ_{JA}, and the ambient temperature T_A. The maximum allowable continuous power dissipation at any ambient temperature is calculated by P_D (MAX) = (T_J (MAX)-T_A)/θ_{JA}. Exceeding the maximum allowable power dissipation produces an excessive die temperature, causing the regulator to go into thermal shutdown. Internal thermal shutdown circuitry protects the device from permanent damage.
3) The device is not guaranteed to function outside of its operating conditions.
4) Measured on JESD51-7, 4-layer PCB.

MPS Proprietary Information. Patent Protected. Unauthorized Photocopy and Duplication Prohibited.
© 2016 MPS. All Rights Reserved.

QISDA USE ONLY / DO NOT DISTRIBUTE

ELECTRICAL CHARACTERISTICS

V_{IN} = 12V, V_{EN} = 5V, T_A = 25°C, unless otherwise noted.

Parameters	Symbol	Condition	Min	Typ	Max	Units
Operating input voltage	V_{IN}		5		28	V
Supply current (quiescent)	I_Q	V_{IN} = 12V, V_{EN} = 5V, no load without switching	1.2	1.35	1.5	mA
Supply current (operation)	I_{OP}	V_{IN} = 12V, V_{EN} = 5V, no load with switching		3	5.5	mA
Supply current (shutdown)	I_{ST}	V_{EN} = 0V, V_{IN} = 12V		0.01	0.5	μA
LDO output voltage	V_{CC}	V_{EN} = 5V, 7V < V_{IN} < 28V, 0 < I_{VCC} < 10mA	5.4	6	6.6	V
VCC UVLO threshold	V_{IN_UVLO}	Rising edge	3.6	4	4.4	V
VCC UVLO hysteresis				200		mV
EN high voltage	V_{EN_HIGH}	V_{EN} rising	1.4			V
EN low voltage	V_{EN_LOW}	V_{EN} falling			0.6	V
Step-Up Converter						
Gate driver impedance (sourcing)		V_{CC} = 6V, V_{GATE} = 6V		4.5	7	Ω
Gate driver impedance (sinking)		V_{CC} = 6V, I_{GATE} = 10mA		2.5	5	Ω
Switching frequency	f_{SW}	R_{OSC} = 115kΩ	459	540	621	kHz
		R_{OSC} = 374kΩ	150	180	210	kHz
OSC voltage	V_{OSC}		1.20	1.23	1.26	V
Maximum duty cycle	D_{MAX}	R_{OSC} = 115kΩ	90	93		%
Cycle-by-cycle ISENSE current limit		Max duty cycle	175	220	265	mV
COMP source current limit	$I_{COMP\ SOLI}$	1V < COMP < 1.9V		70		μA
COMP sink current limit	$I_{COMP\ SILI}$	1V < COMP < 1.9V		17		μA
COMP transconductance	G_{COMP}	ΔI_{COMP} = ±10μA		400		μA/V
Current Dimming						
PWM input low threshold	V_{PWM_LO}	V_{PWM} falling			0.6	V
PWM input high threshold	V_{PWM_HI}	V_{PWM} rising	1.4			V
ADIM input low threshold	V_{ADIM_LO}	V_{ADIM} falling			0.6	V
ADIM input high threshold	V_{ADIM_HI}	V_{ADIM} rising	1.4			V

MPS Proprietary Information. Patent Protected. Unauthorized Photocopy and Duplication Prohibited.
© 2016 MPS. All Rights Reserved.

QISDA USE ONLY / DO NOT DISTRIBUTE

ELECTRICAL CHARACTERISTICS *(continued)*

V_{IN} = 12V, V_{EN} = 5V, T_A = 25°C, unless otherwise noted.

Parameters	Symbol	Condition	Min	Typ	Max	Units
LED Current Regulation						
ISET voltage	V_{ISET}		1.22	1.24	1.26	V
LEDX average current	I_{LED}	R_{ISET} = 30.5kΩ	31.9	32.9	33.9	mA
		R_{ISET} = 8.87kΩ, F_{ADIM} = 20kHz, D_{ADIM} = 5%	5.3	5.7	6.2	mA
Current matching(5)		R_{ISET} = 30.5kΩ, I_{LED} = 32.9mA, F_{PWM} = 100%			2.5	%
		R_{ISET} = 8.87kΩ F_{ADIM} = 20kHz, D_{ADIM} = 5%			2.5	%
VCC max current limit	I_{CC_Limit}		50	75	100	mA
LED MOSFET resistance	R_{LED}	I_{LED} = 10mA		1.7		Ω
LEDX regulation voltage	V_{LEDX}	I_{LED} = 330mA		800		mV
		I_{LED} = 60mA		285		mV
Protection						
OVP threshold	V_{OVP_OV}	Rising edge	1.20	1.23	1.26	V
OVP threshold hysteresis	V_{OVP_HYS}	Hysteresis		80		mV
OVP UVLO threshold	V_{OVP_UV}	Step-up converter fails	30	75	120	mV
LEDX UVLO threshold	V_{LEDX_UV}		120	200	280	mV
LEDX over-voltage threshold	V_{LEDX_OV}		5.8	6.3	6.8	V
LED short fault cycles	T_{LED_OV}			4096		
Latch-off current limit	V_{LMT}		560	640	720	mV
Thermal protection threshold (6)	T_{ST}			150		°C
Thermal protection hysteresis				25		°C

NOTE:

5) Matching is defined as the difference of the maximum to minimum current divided by 2 times average currents.

6) Guarantee by design.

MPS Proprietary Information. Patent Protected. Unauthorized Photocopy and Duplication Prohibited.
© 2016 MPS. All Rights Reserved.

QISDA USE ONLY / DO NOT DISTRIBUTE

TYPICAL PERFORMANCE CHARACTERISTICS

I_Q vs. Temperature

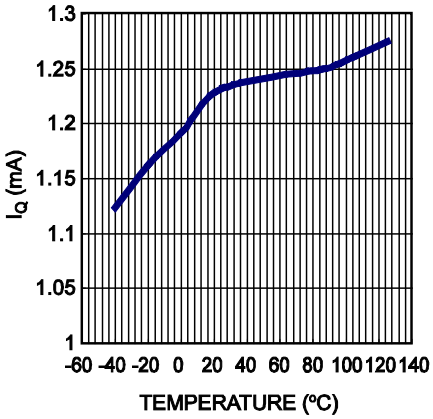

OVP Voltage vs. Temperature

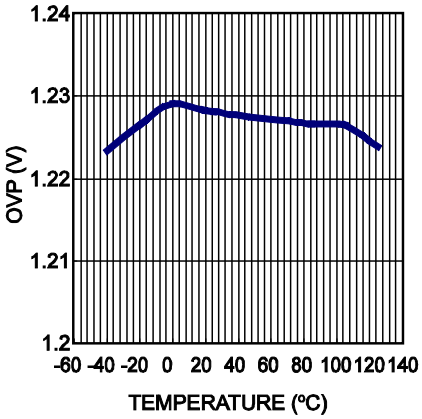

VCC UVLO vs. Temperature

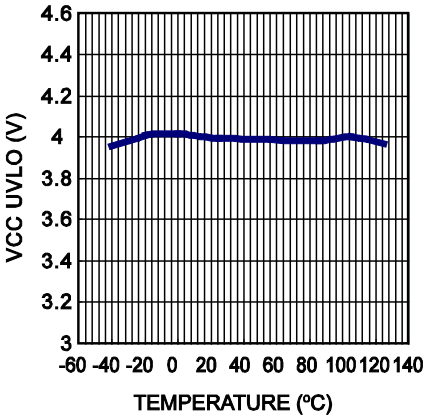

I_{LED_AVG} vs. Temperature

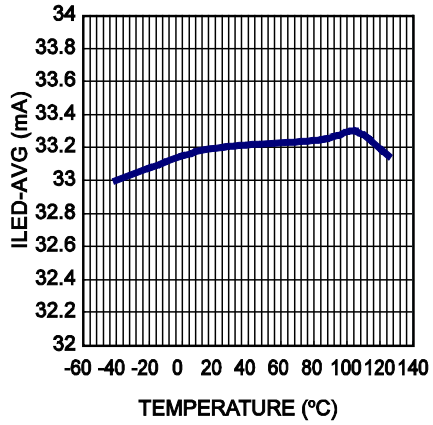

I_{LED} Matching vs. Temperatue

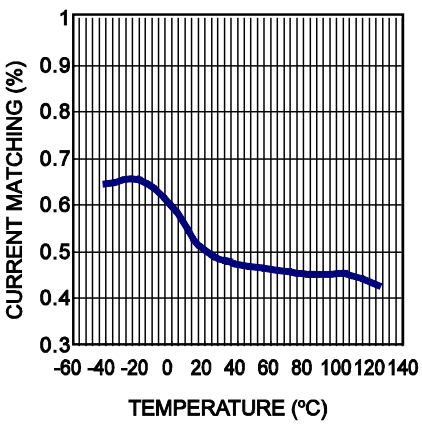

SW Frequency vs. Temperature (R_{OSC}=374kΩ)

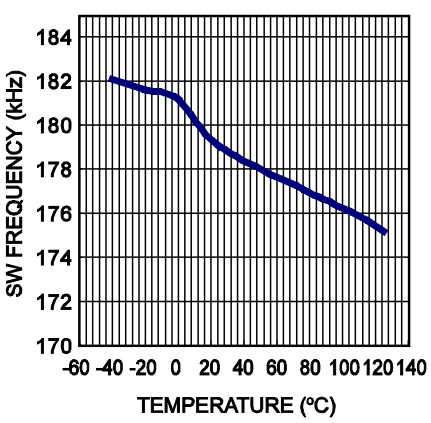

V_{LEDX} Regulation Voltage vs. Temperature

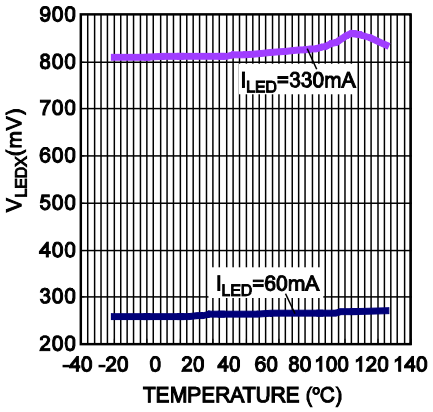

MPS Proprietary Information. Patent Protected. Unauthorized Photocopy and Duplication Prohibited.
© 2016 MPS. All Rights Reserved.

QISDA USE ONLY / DO NOT DISTRIBUTE

TYPICAL PERFORMANCE CHARACTERISTICS *(continued)*

V_{IN} = 12V, V_{OUT} = 30V, L = 33µH, I_{LED} = 120mA/String, 4 strings, T_A = 25°C, unless otherwise noted.

Efficiency vs. Input Voltage

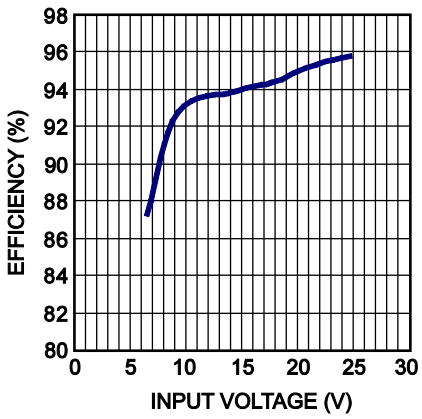

MPS Proprietary Information. Patent Protected. Unauthorized Photocopy and Duplication Prohibited.
© 2016 MPS. All Rights Reserved.

QISDA USE ONLY / DO NOT DISTRIBUTE

TYPICAL PERFORMANCE CHARACTERISTICS *(continued)*

V_{IN} = 12V, V_{OUT} = 30V, L = 33µH, T_A = 25°C, unless otherwise noted.

Steady State

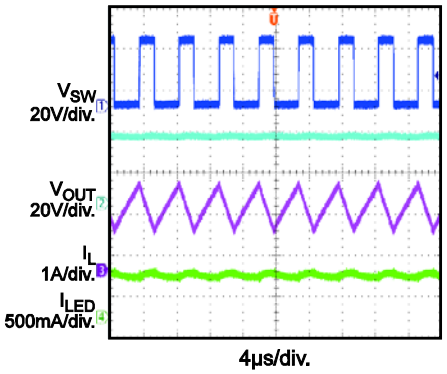

V_{IN} Power On

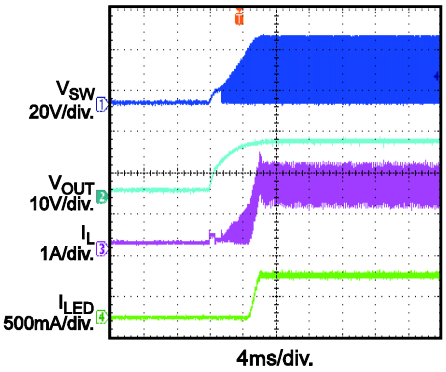

EN Power On

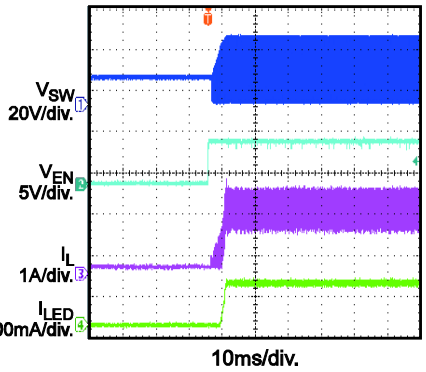

Analog Dimming with PWM Input

f_{PWM} = 20kHz, D_{PWM} = 50%

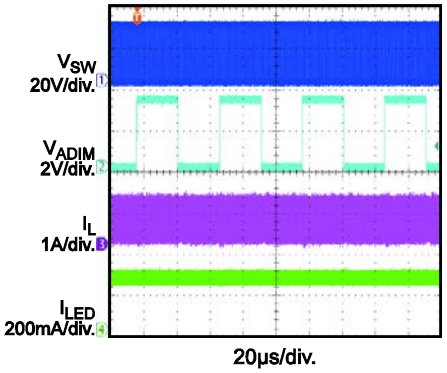

PWM Dimming

f_{PWM} = 200Hz, D_{PWM} = 50%

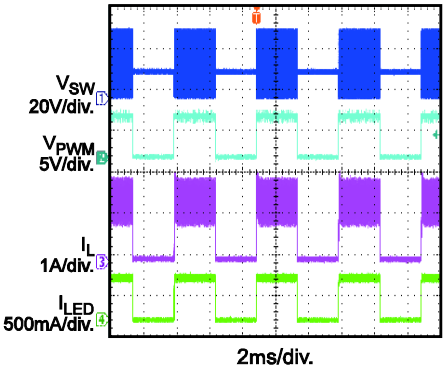

Open LED Protection

Open One LED String at Working

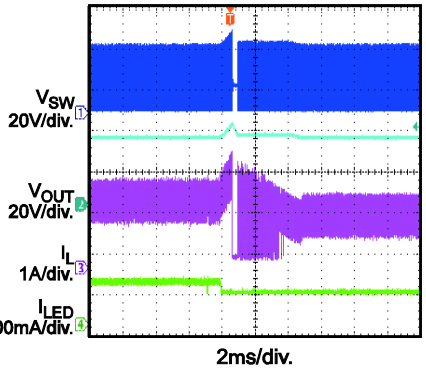

Short LED Protection

Short V_{OUT} to LEDx at Working

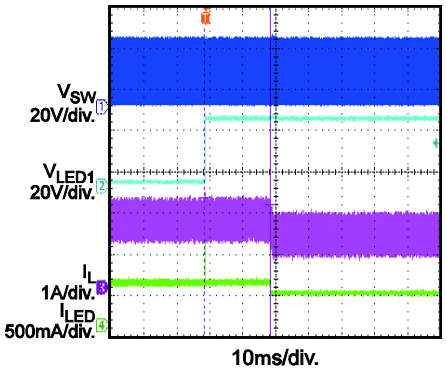

Short Inductor Protection

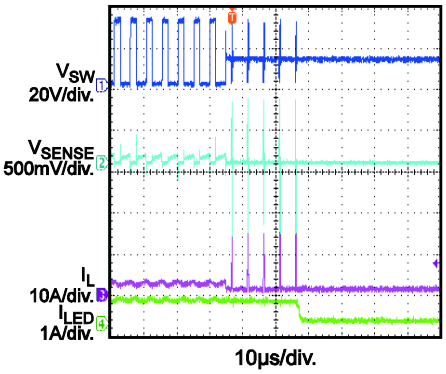

Short Diode Protection

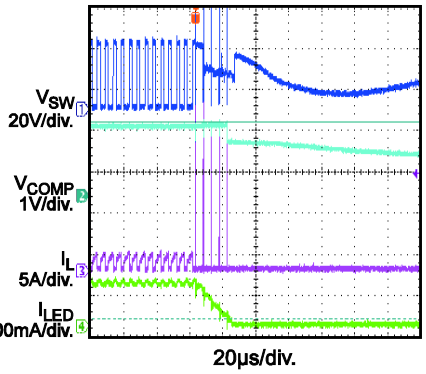

MPS Proprietary Information. Patent Protected. Unauthorized Photocopy and Duplication Prohibited.
© 2016 MPS. All Rights Reserved.

QISDA USE ONLY / DO NOT DISTRIBUTE

PIN FUNCTIONS

SOIC16 Pin #	SOIC20 Pin #	Name	Description
1	1	COMP	**Step-up converter compensation.** COMP compensates for the regulation control loop. Connect a ceramic capacitor from COMP to GND.
2	2	EN	**Enable control input.** A voltage on EN greater than 1.4V turns the MP3398D on; a voltage less than 0.6V turns the MP3398D off. Do not leave EN floating.
3	3	PWM	**Input signal for PWM brightness control.** By applying a PWM signal on PWM, the LED current can be chopped, and the average current equals ISET x D_{DIM}, where ISET is the LED current value set by a resistor connected to PIN 6, and D_{DIM} is the duty cycle of the PWM dimming duty cycle. Ensure that the PWM amplitude voltage level is greater than V_{PWM_HI} and the low-level voltage is less than V_{PWM_LO}. The input PWM signal frequency mainly determines the LED current dimming ratio. A lower dimming frequency can result in a smaller dimming current. In general, 200Hz to 2kHz is suitable for most LED current dimming applications. If PWM is floating, weakly pull it to GND internally. If PWM dimming is not required, pull PWM to a high voltage ($1.4V < V_{PWM} < 5V$).
4	5	GND	**Ground of the IC.**
5	7	OSC	**Switching frequency set.** Connect a resistor between OSC and GND to set the step-up converter switching frequency. The OSC voltage is regulated to 1.23V. The clock frequency is proportional to the current sourced from OSC.
6	8	ISET	**LED current set.** Tie a current-setting resistor from ISET to ground to program the current in each LED string. The ISET voltage is regulated to 1.24V. The LED current is proportional to the current through the ISET resistor.
7	9	ADIM	**Signal input for analog brightness control.** The LED current amplitude is determined by ADIM, and the input signal is a PWM signal. An internal R-C filter (10MΩ resistor and 100pF capacitor) is integrated into ADIM. If a PWM signal is applied to ADIM, a frequency greater than 20kHz is recommended to achieve better PWM signal filtering and ensure that the amplitude voltage is higher than 1.4V and the low-level voltage is less than 0.6V. If ADIM is floating, weakly pull it to GND internally. If analog dimming is not required, pull ADIM to a high voltage ($1.4V < V_{ADIM} < 5V$).
8	10	LED4	**LED string 4 current input.** LED4 is the open-drain output of an internal dimming-control switch. Connect the LED string 4 cathode to LED4.
9	11	LED3	**LED string 3 current input.** LED3 is the open-drain output of an internal dimming control switch. Connect the LED string 3 cathode to LED3.
10	12	LED2	**LED string 2 current input.** LED2 is the open-drain output of an internal dimming control switch. Connect the LED string 2 cathode to LED2.
11	13	LED1	**LED string 1 current input.** LED1 is the open-drain output of an internal dimming control switch. Connect the LED string 1 cathode to LED1.
12	14	OVP	**Over-voltage protection input.** Connect a resistor divider from the output to OVP to program the OVP threshold. When the OVP voltage reaches 1.23V, the MP3398D triggers over-voltage protection.

MPS Proprietary Information. Patent Protected. Unauthorized Photocopy and Duplication Prohibited.
© 2016 MPS. All Rights Reserved.

QISDA USE ONLY / DO NOT DISTRIBUTE

PIN FUNCTIONS *(continued)*

SOIC16 Pin #	SOIC20 Pin #	Name	Description
13	17	ISENSE	**Current sense input.** During normal operation, ISENSE senses the voltage across the external inductor current-sensing resistor (R_{SENSE}) for peak-current-mode control and to limit the inductor current during every switching cycle. If ISENSE is not used for cascading applications, tie it to GND. Do not leave ISENSE floating.
14	18	GATE	**Step-up converter power switch gate output.** GATE drives the external power N-channel MOSFET device.
15	19	VIN	**Supply input.** VIN supplies power to the chip and the step-up converter switch. Drive VIN with a 5V-to-28V power source. Must be bypassed locally.
16	20	VCC	**Internal 6V linear regulator output.** VCC provides a power supply for the external MOSFET switch gate driver and the internal control circuitry. Bypass VCC to GND with a ceramic capacitor.
	4, 6, 15, 16	NC	**No connection.**

MPS Proprietary Information. Patent Protected. Unauthorized Photocopy and Duplication Prohibited.
© 2016 MPS. All Rights Reserved.

QISDA USE ONLY / DO NOT DISTRIBUTE

BLOCK DIAGRAM

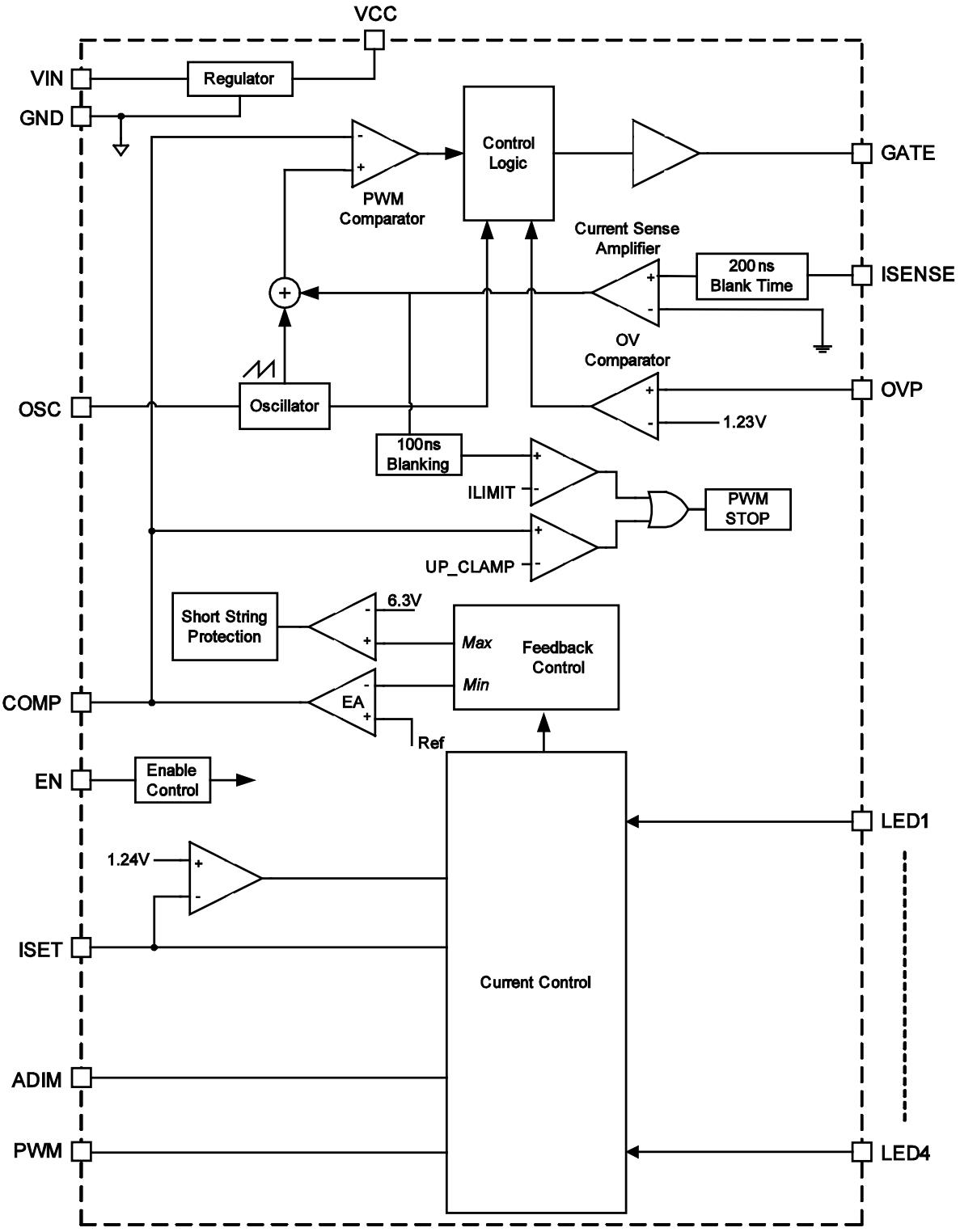

Figure 1: Functional Block Diagram

MPS Proprietary Information. Patent Protected. Unauthorized Photocopy and Duplication Prohibited.
© 2016 MPS. All Rights Reserved.

QISDA USE ONLY / DO NOT DISTRIBUTE

OPERATION

The MP3398D is a step-up converter with peak-current mode control. It employs four channels of current sources to drive up to four strings of white LEDs.

Internal 6V Regulator

The MP3398D includes an internal linear regulator (VCC). When VIN is greater than 6.5V, this regulator outputs a 6V power supply to the external MOSFET switch-gate driver and the internal control circuitry. The VCC voltage drops to 0V when the chip shuts down. The MP3398D also has under-voltage lockout (UVLO). The chip is disabled until VCC exceeds the UVLO threshold. The UVLO hysteresis is approximately 200mV.

System Start-Up

When enabled, the MP3398D checks the topology connection first. The chip monitors the over-voltage protection (OVP) to determine if the Schottky diode is not connected or if the boost output is shorted to GND. An OVP voltage less than 75mV will disable the chip.

The MP3398D also checks other safety limits after passing the OVP test, including UVLO, over-temperature protection (OTP), and over-current protection (OCP). If all protection tests pass, the chip starts boosting the step-up converter with an internal soft start.

It is recommended that the enable signal occurs after the establishment of the input voltage and the PWM dimming signal during the start-up sequence to prevent a large inrush current.

Step-Up Converter

The converter operating frequency is programmable from 100kHz to 500kHz with an external resistor connected to OSC. This helps optimize efficiency and the size of the external components.

At the beginning of each switching cycle, the internal clock turns on the external MOSFET. During normal operation, the minimum turn on time is 200ns. A stabilizing ramp added to the output of the current sense amplifier prevents subharmonic oscillations for duty cycles greater than 50%. This result is fed into the PWM comparator. When this resulting voltage reaches the output voltage of the error amplifier (V_{COMP}), the external MOSFET turns off.

The output voltage of the internal error amplifier is an amplified signal of the difference between the reference voltage and the feedback voltage. The converter chooses the lowest active LEDX pin voltage automatically to provide a sufficient bus voltage to power all of the LED arrays.

If the feedback voltage drops below the reference, the output of the error amplifier increases. This results in more current flowing through the MOSFET, increasing the power delivered to the output and forming a closed loop that regulates the output voltage.

Under light-load operation, especially in the case of $V_{OUT} \approx$ VIN, the converter runs in pulse-skipping mode. In this mode, the MOSFET turns on for a minimum on time of approximately 200ns, and then the converter discharges the power to the output for the remaining period. The external MOSFET remains off until the output voltage needs to be boosted again.

Dimming Control

The MP3398D provides two dimming methods: PWM and analog dimming mode.

For PWM dimming, apply a PWM signal to PWM. The LED current is chopped by this signal, and the average LED current is equal to ISET x D_{DIM}, where ISET is the LED current amplitude and D_{DIM} is the duty cycle of the PWM dimming signal.

For analog dimming, a PWM signal is applied to ADIM. When a PWM signal is applied to ADIM, this signal is filtered by the internal RC filter. The LED current amplitude is equal to ISET x D_{DIM}, where ISET is the LED current amplitude and D_{DIM} is the duty cycle of the PWM dimming signal. A PWM signal 20kHz or higher is recommended for better filtering.

MPS Proprietary Information. Patent Protected. Unauthorized Photocopy and Duplication Prohibited.
© 2016 MPS. All Rights Reserved.

QISDA USE ONLY / DO NOT DISTRIBUTE

Open-String Protection

Open-string protection is achieved through the OVP and LEDX (1 to 4) pins. If one or more strings are open, the respective LEDX pins are pulled to ground, and the IC continues charging the output voltage until it reaches the OVP threshold. If the OVP point has been triggered for more than 4μs, the chip stops switching and marks the strings that have an LEDX pin voltage lower than 200mV. Once marked, the remaining LED strings force the output voltage back into tight regulation. The string with the largest voltage drop determines the output regulation.

The MP3398D always attempts to light at least one string. If all strings are open, the MP3398D shuts down the step-up converter. The strings remain in this marked state until the chip resets.

Short-String Protection

The MP3398D monitors the LEDX pin voltages to determine if a short-string fault has occurred. If one or more strings are shorted, the respective LEDX pins tolerate high voltage stress. If an LEDX pin voltage is higher than 6.3V, this condition triggers the detection of a short string. When a short-string fault (LEDX over-voltage fault) remains for 4096 switching cycles, the fault string is marked off and disabled. Once a string is marked off, it disconnects from the output voltage loop. The marked LED strings shut off completely until the part restarts. Short LED protection can be mistriggered by two events: when open LED protection is triggered, or when the PWM duty on ADIM goes from high to low in a short amount of time. To prevent this, the short LED protection function is disabled when V_{LEDX} of all of the working LED channels are higher than 1.5V.

Inductor and Diode Short Protection

To protect the IC and external MOSFET from damage caused when the external inductor is shorted, the MP3398D uses two protection mode methods.

The first method occurs when the inductor is shorted. The output is unable to maintain enough energy to load the LED, causing the output voltage to drop. Thus, the COMP voltage (error amplifier output) rises until it is clamped high. When the COMP voltage lasts for more than 512 switching cycles, the IC turns off and latches.

The second method occurs in cases where the COMP voltage cannot be clamped high when the inductor is shorted. The IC detects the current flowing through the power MOSFET. When the current sense voltage across the sense resistor (connected between MOSFET and GND) reaches the V_{LMT} value and lasts for four switching cycles, the IC turns off and latches.

Thermal Shutdown

To prevent the IC from operating at exceedingly high temperatures, the MP3398D implements thermal shutdown by detecting the silicon die temperature. When the die temperature exceeds the upper threshold (T_{ST}), the IC shuts down and resumes normal operation when the die temperature drops below the lower threshold. Typically, the hysteresis value is 25°C.

MPS Proprietary Information. Patent Protected. Unauthorized Photocopy and Duplication Prohibited.
© 2016 MPS. All Rights Reserved.

QISDA USE ONLY / DO NOT DISTRIBUTE

APPLICATION INFORMATION

Selecting the Switching Frequency

The switching frequency of the step-up converter is recommended to be between 100kHz and 500kHz for most applications. An oscillator resistor on OSC sets the internal oscillator frequency for the step-up converter according to Equation (1):

$$F_{SW}(kHz) = \frac{67320}{R_{OSC}(k\Omega)} \quad (1)$$

When R_{OSC} = 374kΩ, the switching frequency is set to 180kHz.

Setting the LED Current

Each LED string current can be set through the current setting resistor on ISET and can be calculated with Equation (2):

$$I_{LED}(mA) = \frac{810 \times 1.24(V)}{R_{ISET}(k\Omega)} \quad (2)$$

When R_{ISET} = 8.37kΩ, the LED current is set to 120mA. Do not leave ISET open.

Selecting the Input Capacitor

The input capacitor reduces the surge current drawn from the input supply and the switching noise from the device. The input capacitor impedance at the switching frequency should be less than the input source impedance to prevent the high-frequency switching current from passing through to the input. Ceramic capacitors with X5R or X7R dielectrics are recommended for their low ESR and small temperature coefficients. For most applications, use a 4.7μF ceramic capacitor in parallel with a 220μF electrolytic capacitor.

Selecting the Inductor and Current Sensing Resistor

The MP3398D requires an inductor to supply a higher output voltage while being driven by the input voltage. A larger value inductor results in less ripple current, resulting in lower peak inductor current and reducing stress on the N-channel MOSFET. However, the larger value inductor also has a larger physical size, higher series resistance, and lower saturation current.

Choose an inductor that will not saturate under worst-case load conditions. Select a minimum inductor value that ensures that the boost converter works in continuous conduction mode with high efficiency and good EMI performance.

Calculate the required inductance value using Equation (3) and Equation (4):

$$L \geq \frac{\eta V_{OUT} D (1-D)^2}{2 \times f_{SW} \times I_{LOAD}} \quad (3)$$

$$D = 1 - \frac{V_{IN}}{V_{OUT}} \quad (4)$$

Where V_{IN} is the input voltage, V_{OUT} is the output voltage, f_{SW} is the switching frequency, I_{LOAD} is the LED load current, and η is the efficiency.

The switching current is used for peak-current-mode control, typically. To avoid hitting the current limit, the voltage across the sensing resistor (R_{SENSE}) must measure less than 80% of the worst-case current-limit voltage (V_{SENSE}). Calculate R_{SENSE} and $I_{L(PEAK)}$ with Equation (5) and Equation (6):

$$R_{SENSE} = \frac{0.8 \times VSENSE}{I_{L(PEAK)}} \quad (5)$$

$$I_{L(PEAK)} = \frac{V_{OUT} \times I_{LOAD}}{\eta V_{IN}} + \frac{V_{IN} \times (V_{OUT} - V_{IN})}{2 \times L \times F_{SW} \times V_{OUT}} \quad (6)$$

Where $I_{L(PEAK)}$ is the peak value of the inductor current. V_{SENSE} is shown in Figure 2.

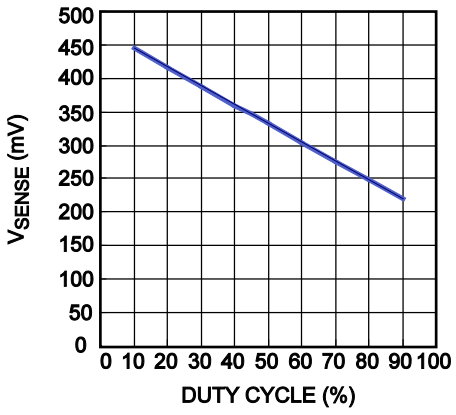

Figure 2: V_{SENSE} vs. Duty Cycle

MPS Proprietary Information. Patent Protected. Unauthorized Photocopy and Duplication Prohibited.
© 2016 MPS. All Rights Reserved.

QISDA USE ONLY / DO NOT DISTRIBUTE

Selecting the Power MOSFET

The MP3398D is capable of driving a wide variety of N-channel power MOSFETs. The critical parameters for selecting a MOSFET are maximum drain-to-source voltage ($V_{DS(MAX)}$), maximum current ($I_{D(MAX)}$), on-resistance ($R_{DS(ON)}$), gate-source charge (Q_{GS}) and gate-drain charge (Q_{GD}), and total gate charge (Q_G).

Ideally, the off-state voltage across the MOSFET should equal the output voltage. Considering the voltage spike when the MOSFET turns off, $V_{DS(MAX)}$ should be greater than 1.5 times the output voltage.

The maximum current through the power MOSFET occurs at the minimum input voltage and the maximum output power. The maximum RMS current through the MOSFET is given by Equation (7):

$$I_{RMS(MAX)} = I_{IN(MAX)} \times \sqrt{D_{MAX}} \quad (7)$$

D_{MAX} can be calculated with Equation (8):

$$D_{MAX} \approx \frac{V_{OUT} - V_{IN(MIN)}}{V_{OUT}} \quad (8)$$

The current rating of the MOSFET should be greater than 1.5 times I_{RMS}. The on resistance of the MOSFET determines the conduction loss, which is given by Equation (9):

$$P_{cond} = I_{RMS}^{\ 2} \times R_{DS(ON)} \times k \quad (9)$$

Where k is the temperature coefficient of the MOSFET.

The switching loss is related to Q_{GD} and Q_{GS1}, which determine the commutation time. Q_{GS1} is the charge between the threshold voltage and the plateau voltage when a driver charges the gate, which can be read in the V_{GS} vs. Q_G chart in the MOSFET datasheet. Q_{GD} is the charge during the plateau voltage. These two parameters are needed to estimate the turn-on and turn-off losses, and can be calculated with Equation (10):

$$P_{SW} = \frac{Q_{GS1} \times R_G}{V_{DR} - V_{TH}} \times V_{DS} \times I_{IN} \times f_{SW} + \frac{Q_{GD} \times R_G}{V_{DR} - V_{PLT}} \times V_{DS} \times I_{IN} \times f_{SW} \quad (10)$$

Where V_{TH} is the threshold voltage, V_{PLT} is the plateau voltage, R_G is the gate resistance, and V_{DS} is the drain-source voltage.

Please note that calculating the switching loss is the most difficult part in loss estimation. The formula above provides a simplified equation. For more accurate estimates, the equation becomes much more complex.

The total gate charge (Q_G) is used to calculate the gate drive loss and can be calculated with Equation (11):

$$P_{DR} = Q_G \times V_{DR} \times f_{SW} \quad (11)$$

Where V_{DR} is the drive voltage.

Selecting the Output Capacitor

The output capacitor keeps the output voltage ripple small and ensures feedback loop stability. The output capacitor impedance must be low at the switching frequency. Ceramic capacitors with X7R dielectrics are recommended for their low ESR characteristics. For most applications, a 4.7µF ceramic capacitor in parallel with a 22µF electrolytic capacitor is sufficient.

Setting the Over-Voltage Protection (OVP)

Open-string protection is achieved through the detection of the voltage on the OVP pin. In some cases, an LED string failure results in the feedback voltage always being zero. The part then continues boosting the output voltage higher and higher. If the output voltage reaches the programmed OVP threshold, the protection is triggered.

To ensure that the chip functions properly, select the resistor values for the OVP resistor divider to provide an appropriate set voltage. The recommended OVP point is about 1.1 to 1.2 times higher than the output voltage for normal operation. The OVP voltage can be calculated with Equation (12):

$$V_{OVP} = 1.23 \times (1 + \frac{R_{HIGH}}{R_{LOW}}) \quad (12)$$

MPS Proprietary Information. Patent Protected. Unauthorized Photocopy and Duplication Prohibited.
© 2016 MPS. All Rights Reserved.

QISDA USE ONLY / DO NOT DISTRIBUTE

Selecting the Dimming Control Mode

The MP3398D provides two different dimming methods: direct and analog.

1. Direct PWM Dimming

An external PWM dimming signal is employed to achieve PWM dimming control. Apply a PWM dimming signal between 200Hz to 20kHz to PWM. The minimum recommended amplitude of the PWM signal is 1.4V, and the low level should be less than 0.6V (see Table 1).

Table 1: The Range of PWM Dimming Duty

f_{PWM} (Hz)	D_{min}	D_{max}
100 < f ≤ 200	0.30%	100%
200 < f ≤ 500	0.75%	100%
500 < f ≤ 1k	1.50%	100%
1k < f ≤ 2k	3.00%	100%
2k < f ≤ 5k	7.50%	100%
5k < f ≤ 10k	15.00%	100%
10k < f ≤ 20k	30.00%	100%

2. Analog Dimming

For analog dimming, apply a PWM signal to ADIM. An internal RC filter (10MΩ resistor and 100pF capacitor) is integrated into ADIM. If a PWM signal is applied to ADIM, use a frequency greater than 20kHz to achieve a better PWM signal filtering performance and ensure that the amplitude voltage is higher than 1.4V and the low level voltage is less than 0.6V.

Expanding LED Channels

The MP3398D can expand the number of LED channels by using two or three devices in parallel. To connect two MP3398D devices for a total of eight LED strings, tie the VCC pins of the master IC and the slave IC together to power the slave IC internal logic circuitry. Tie the COMP pins of the slave IC and the master IC together to regulate the voltage of all eight LED strings. The slave IC MOSFET driving signals are not used; the boost converter can only be driven by the master IC. Do not leave ISENSE of the slave IC floating; tie it to ground. Apply the EN and DIM signals to both ICs.

PCB Layout Guidelines

Efficient PCB layout is critical for stable operation. The circuit layout for the MP3398D requires special attention to reduce EMI noise. For best results, refer to Figure 3 and follow the guidelines below.

1. Keep the loop from the external MOSFET (M1), through the output diode (D1) and the output capacitor (C2, C3) as small and short as possible, since it carries a high-frequency pulse current.
2. Separate the power ground (PGND) and signal ground (GND).
3. Connect PGND and GND together to reduce noise. All logic signals refer to the signal ground.

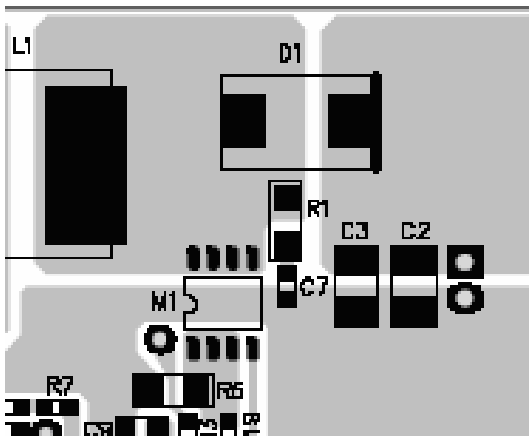

Figure 3: Layout Consideration

MPS Proprietary Information. Patent Protected. Unauthorized Photocopy and Duplication Prohibited.
© 2016 MPS. All Rights Reserved.

QISDA USE ONLY / DO NOT DISTRIBUTE

TYPICAL APPLICATION CIRCUIT

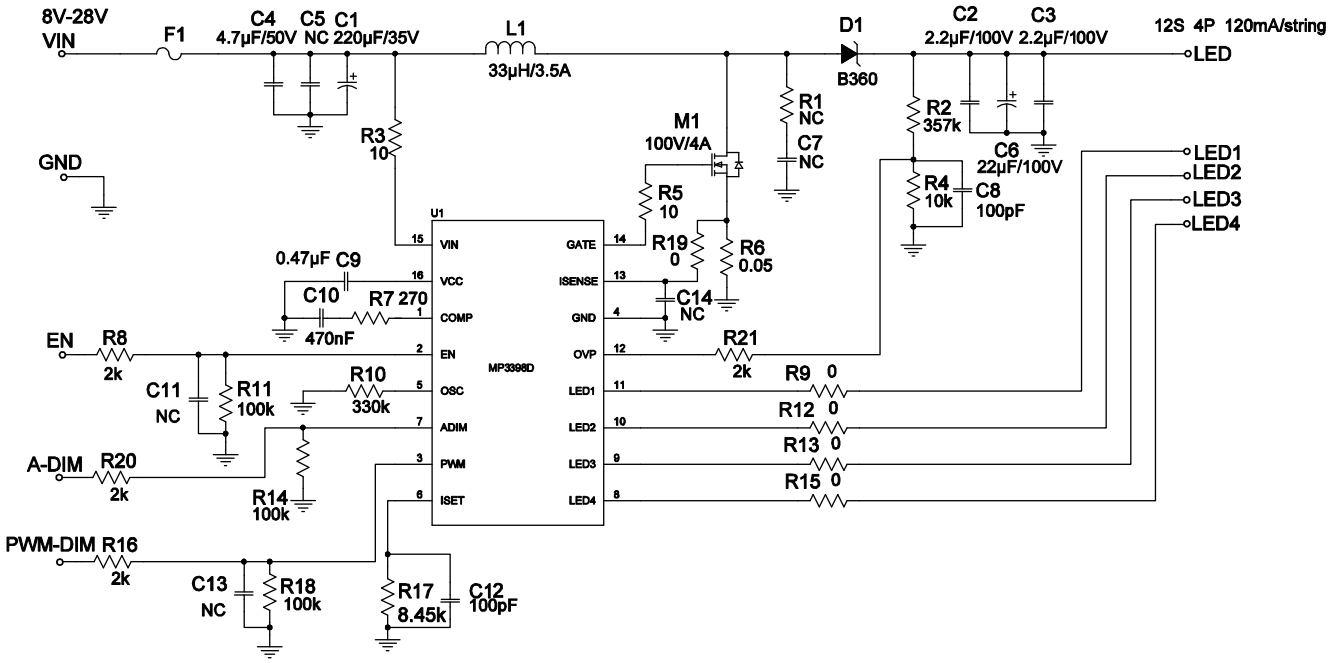

Figure 4: 4-String, 12 LEDs in Series, 120mA/String Application

NOTE:

Some components are reasonably adjustable based on real cases.

MPS Proprietary Information. Patent Protected. Unauthorized Photocopy and Duplication Prohibited.
© 2016 MPS. All Rights Reserved.

QISDA USE ONLY / DO NOT DISTRIBUTE

PACKAGE INFORMATION

SOIC16

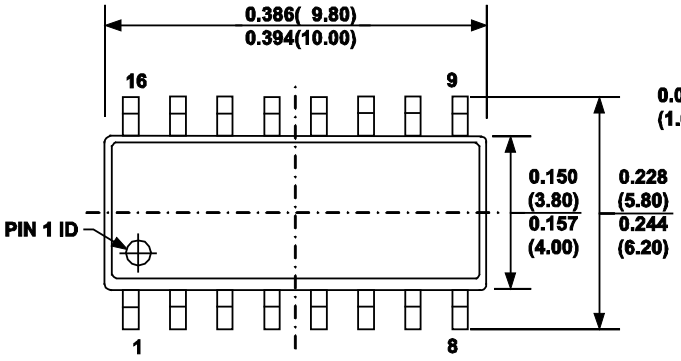

TOP VIEW

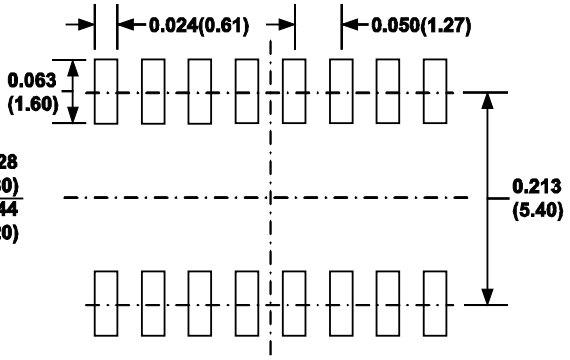

RECOMMENDED LAND PATTERN

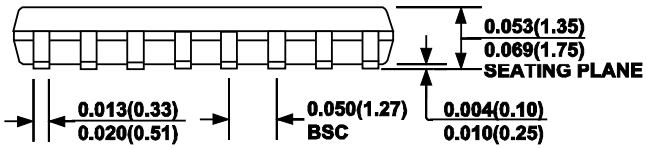

FRONT VIEW

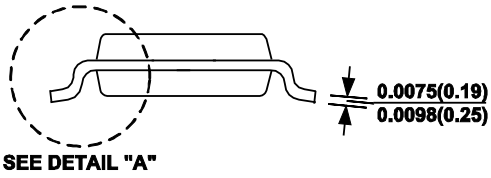

SIDE VIEW

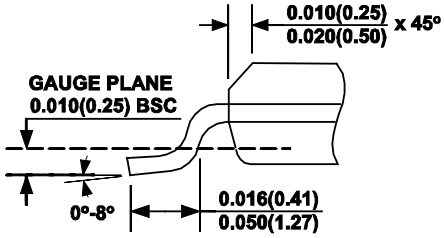

DETAIL "A"

NOTE:

1) CONTROL DIMENSION IS IN INCHES. DIMENSION IN BRACKET IS IN MILLIMETERS.
2) PACKAGE LENGTH DOES NOT INCLUDE MOLD FLASH, PROTRUSIONS OR GATE BURRS.
3) PACKAGE WIDTH DOES NOT INCLUDE INTERLEAD FLASH OR PROTRUSIONS.
4) LEAD COPLANARITY (BOTTOM OF LEADS AFTER FORMING) SHALL BE 0.004" INCHES MAX.
5) DRAWING CONFORMS TO JEDEC MS-012, VARIATION AC.
6) DRAWING IS NOT TO SCALE.

MPS Proprietary Information. Patent Protected. Unauthorized Photocopy and Duplication Prohibited.
© 2016 MPS. All Rights Reserved.

QISDA USE ONLY / DO NOT DISTRIBUTE

PACKAGE INFORMATION *(continued)*

SOIC20

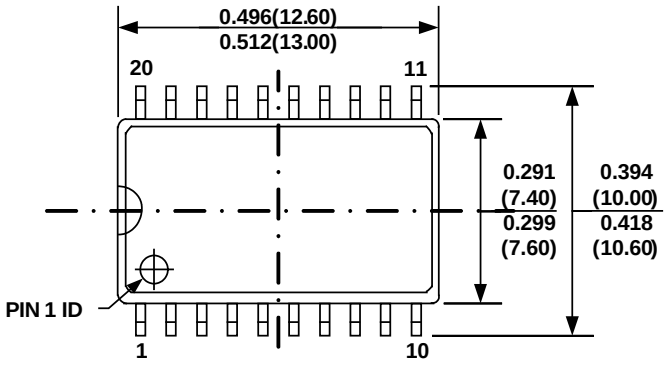

TOP VIEW

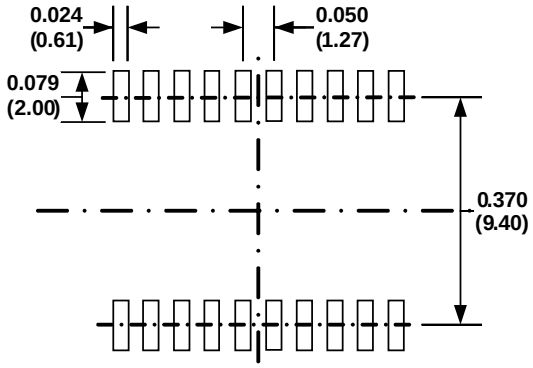

RECOMMENDED LAND PATTERN

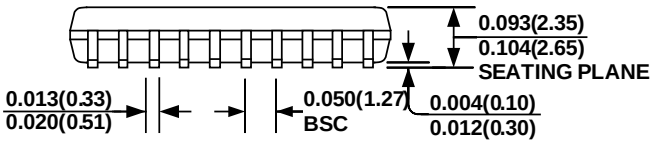

FRONT VIEW

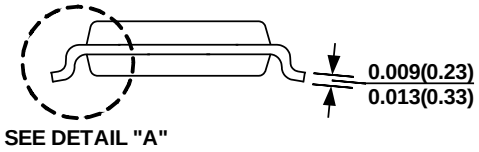

SIDE VIEW

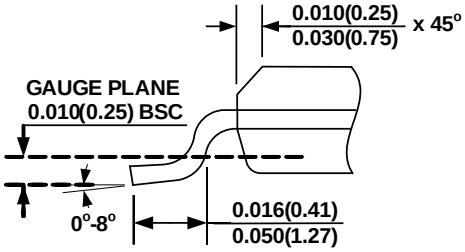

DETAIL "A"

NOTE:

1) CONTROL DIMENSION IS IN INCHES. DIMENSION IN BRACKET IS IN MILLIMETERS.
2) PACKAGE LENGTH DOES NOT INCLUDE MOLD FLASH, PROTRUSIONS OR GATE BURRS.
3) PACKAGE WIDTH DOES NOT INCLUDE INTERLEAD FLASH OR PROTRUSIONS.
4) LEAD COPLANARITY(BOTTOM OF LEADS AFTER FORMING) SHALL BE 0.10 MILLIMETERS MAX.
5) DRAWING CONFORMS TO JEDEC MS-013, VARIATION AC.
6) DRAWING IS NOT TO SCALE.

NOTICE: The information in this document is subject to change without notice. Please contact MPS for current specifications. Users should warrant and guarantee that third party Intellectual Property rights are not infringed upon when integrating MPS products into any application. MPS will not assume any legal responsibility for any said applications.

MPS Proprietary Information. Patent Protected. Unauthorized Photocopy and Duplication Prohibited.
© 2016 MPS. All Rights Reserved.