REV.	DATE	DESCRIPTION	BY	APVD
-	2024-10-17	FIRST RELEASE		-

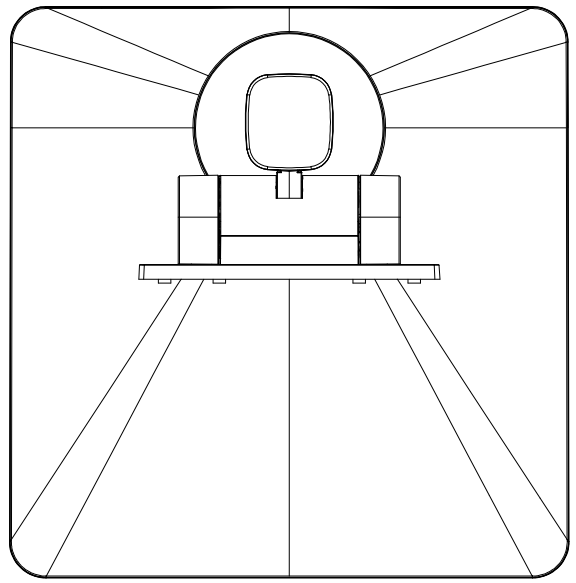

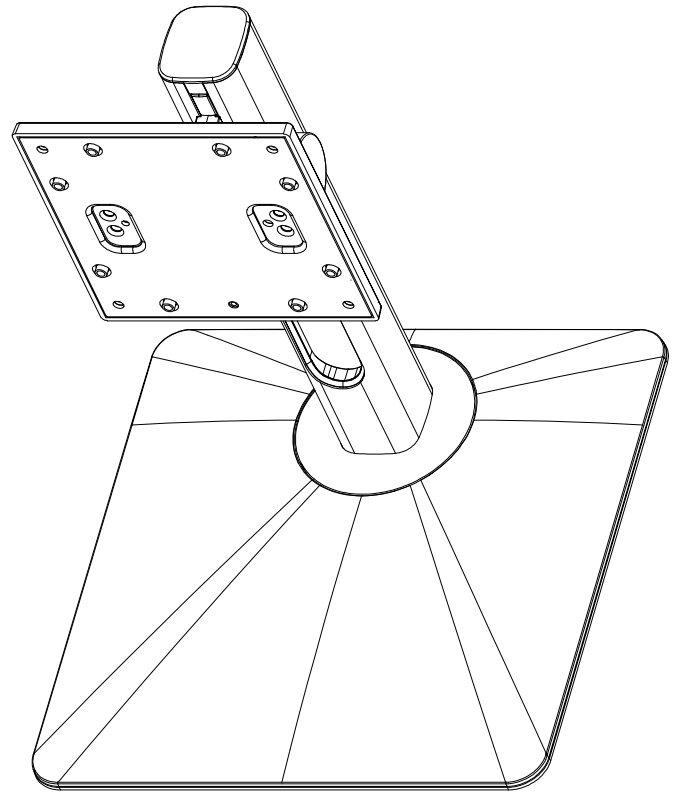

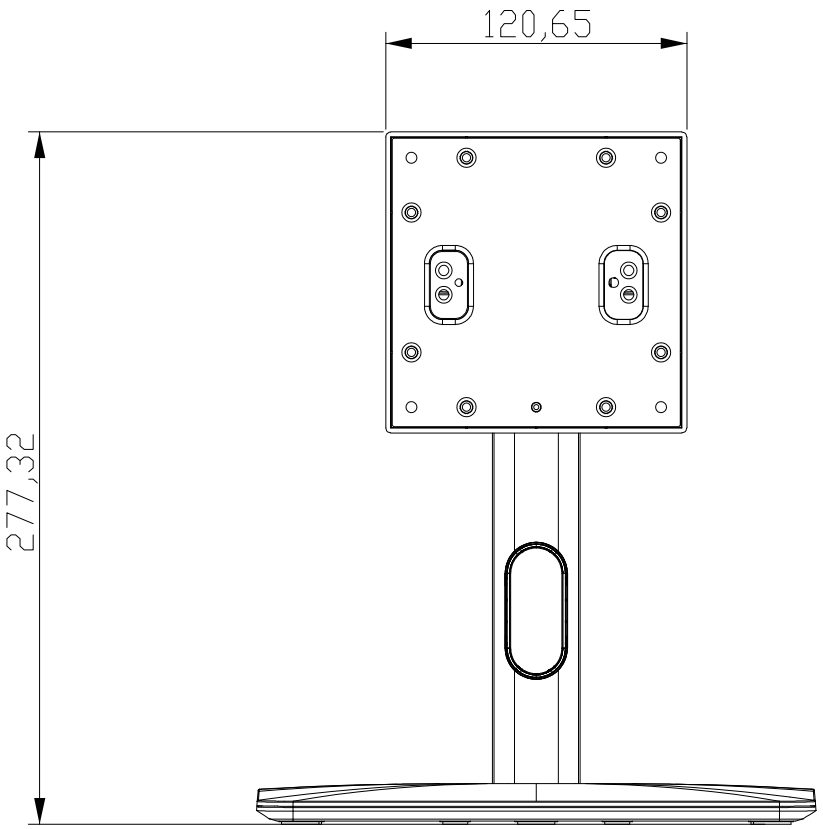

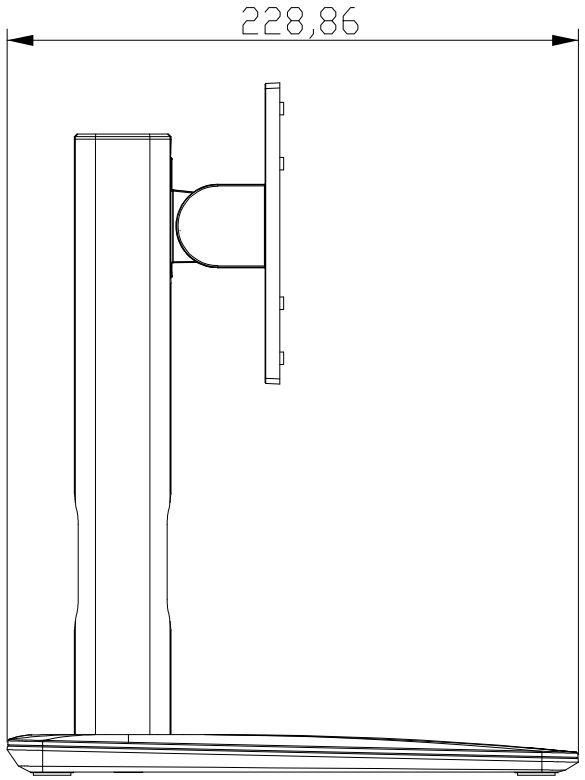

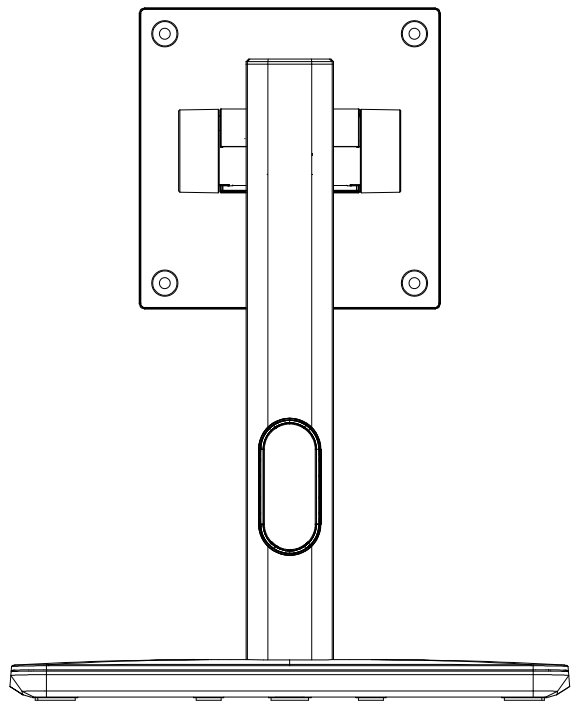

RANGE OF DIMENSION	TOLERANCE CLASS DESIGNATION				THIRD ANGLE PROJECTION	UNITS: mm	SCALE: 1/1	SHEET: 1 OF 1	MODEL NO.: QD2481AI-P
	fine	V medium	coarse	Rubber/Sponge/Mylar/Gasket		MATERIAL:		TREATMENT:	
0.5 UP TO 3	±0.05	±0.1	±0.2	±0.2	DSGD by		2024-10-17	PART NAME:	
OVER 3~6	±0.05	±0.1	±0.3	±0.2	CHK by			DIVA P/N:3MD693ME020	
OVER 6~30	±0.1	±0.2	±0.5	±0.25	APVD by			Qisda NO.:6E.6G601.001	
OVER 30~120	±0.15	±0.3	±0.8	±0.3					
OVER 120~400	±0.2	±0.5	±1.2	±0.5					
OVER 400~1000	±0.3	±0.8	±2.0	±0.8					
ANGLE ±1° (±1.75/100)					APVD NO.:	3D FILE NAME: DRW0008		DIVA Laboratories ,Ltd.	