陞曜國際企業有限公司

產品規格書

(P/N: 3MDL4XLB430)

(M3497)

Files No: SY1131101006

Material: HSYL80#3

SUM YAO International Enterprise Co., LTD.

聯絡人：高左宇

TEL: 02-8693-2883

Fax : 02-8693-2993

APPROVAL SHEET

File No.：**SY1131101006**

Customer:	鈺緯科技發展股份有限公司	Part No.:	3MDL4XLB430 (M3497)
Description	珠光紙高黏商標格底 27mm*4mm	Material Code	HSYL80#3

Yi Hao Precision

奕郝精密股份有限公司　　產品說明書

YH PRECISION CO., LTD.　　SPECIFICATION

型　號(CODE)：HSYL80#3

品　名(PRODUCT NAME)：80umPP 珠光合成紙高黏商標紙自動貼標用

80um PEARLY PP SYNTHETIC PAPER HIGH ADHESION LABEL FOR AUTO-STICKING

產品架構(PRODUCT CONSTRUCTION)

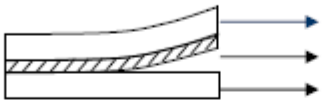

SURFACE MATERIAL

PRESSURE SENSITIVE ADHESIVE

LINER

面　材　SURFACE　MATERIAL		感　壓　膠　PRESSURE SENSITIVE ADHESIVE	
材料名稱 ARTICLE NAME	PP 珠光合成紙 PEARLY PP SYNTHETIC PAPER	膠　系 ADHESIVE BASE	壓克力系 ACRYLIC
厚　度　mm THICKNESS	0.075± 0.005	上　膠　厚　度　mm COATING THICKNESS	0.020±0.002
基　重　g/m² BASIC WEIGHT	64± 5	上　膠　量　g/m² COATING WEIGHT	22 ± 2
顏　色 COLOR	白色 WHITE	黏　著　力 kg/25mm ∠180°PEEL ADHESION	1.4 ↑
底　材　LINER		剝　離　力　g/25mm RELEASE FORCE	4 ~ 10
材料名稱 ARTICLE NAME	格拉辛離型紙 GLASSINE RELEASE PAPER	保持力 hr/Kgx25mm² HOLDING POWER	24 ↑
厚　度　mm THICKNESS	0.066± 0.006	適　用　溫　度℃ TEMPERATURE RANGE	－5 ～ 80
基　重　g/m² BASIC WEIGHT	78 ± 5	適　貼　溫　度℃ TEMPERATURE RANGE	10 ～ 40
顏　色 COLOR	白色 WHITE	保　存　環　境 STOCK ENVIRONMENT	通風、乾燥、避免日光 25℃x60% RH↓ IN A COOL、DRY PLACE
保　存　期　限 STOCK PERIOD	1 年 ONE YEAR		

備　　註：以上技術資料為本公司採用公認可靠的檢驗方法所得平均數值。但為確保正確選擇與使用本公司產品，請您先針對使用條件與目的進行詳細瞭解與試用，或與我們聯繫以為您提供進一步說明與服務。

REMARK：THE TECHNICAL DATA ARE BASED ON THE RELIABLE EXPERIMENT CARRIED BY THE COMPANY. IN ORDER TO USE SUITABLE LABEL, PLEASE COMPLETELY UNDERSTAND ABOUT YOUR CONDITION AND PURPOSE, OR CONTACT US TO PROVIDE FURTHER SERVICE.

奕郝精密股份有限公司 統一編號 28903937 說明書專用章

制訂日期　2022/7/7　　版本 1.1 版

1. **Label Description**
   - Label Size：23mm(W) (+0.2/-0..2mm)*11mm(L) (+0.2/-0.2mm) R=Right angle
   - Color Printed：Blank
   - P/N：3MDL4XLB430

2. **Drawing**

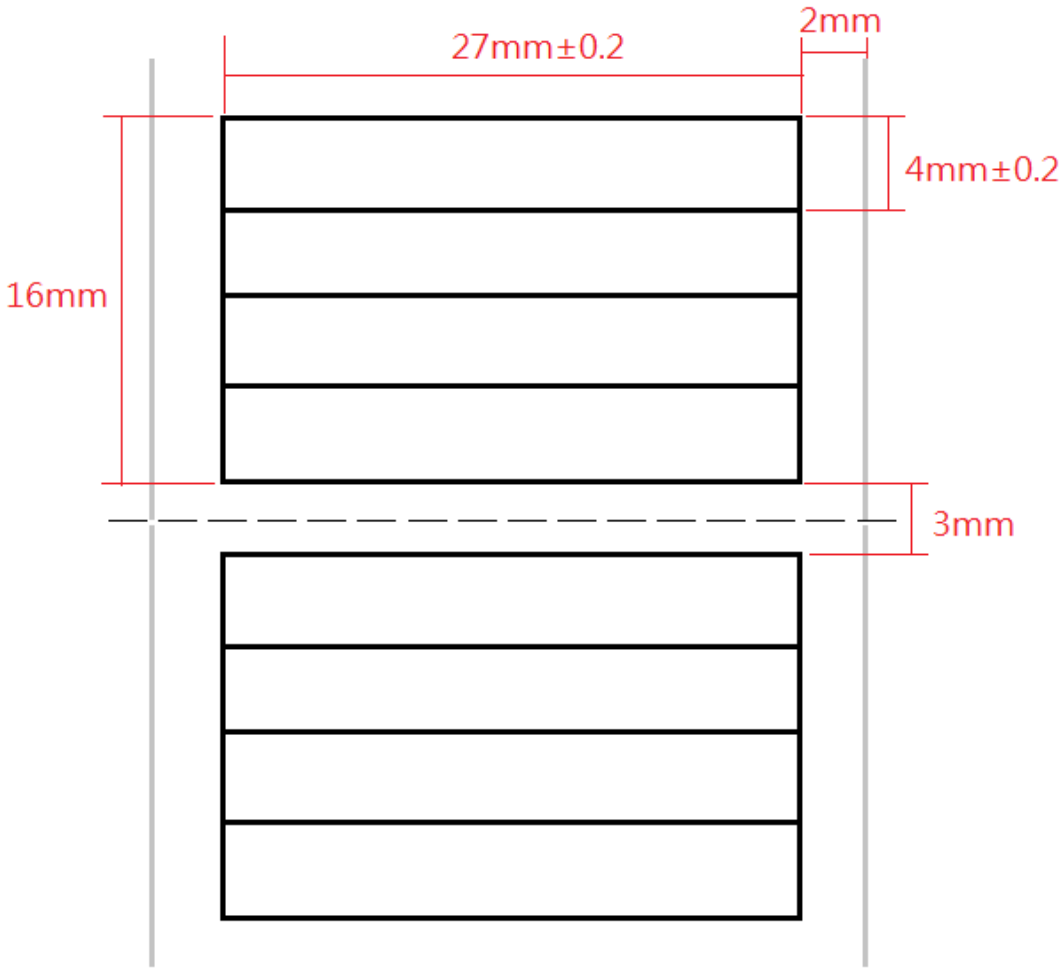

Remark

Customer Approval By	Customer Check By	SumYao Check By	SumYao List By
		高左宇	陳妙真

REV.	DATE	DESCRIPTION	BY	APVD

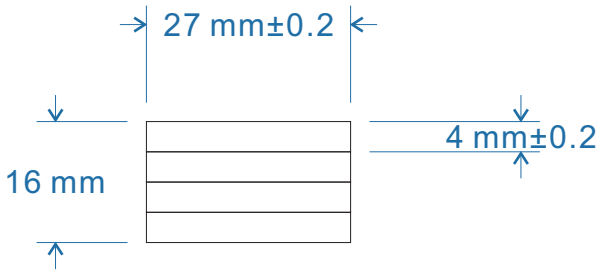

Notes:
1.Material:Pearly pp synthetic paper, Highly sticky adhesive.
2.Color: White.

SALES		THIRD ANGLE PROJECTION	UNITS:mm	SCALE : 1 / 1	SHEET: 1 / 1	MODEL NO.: 3MDL4XLB430
			MATERIAL: See notes		TREATMENT: See notes	
PE	PCD	DSGD by COCO	2024/11/04	PART NAME: CABLELABEL-2(#27*4mm,BLANK)	
		APVD by	2024/11/04	PART NO.: 3MDL4XLB430	VER. 0
		APVD No.: (M3497)	FILE NAME: 3MDL4XLB430.cdr	DIVA Laboratories,Ltd.	