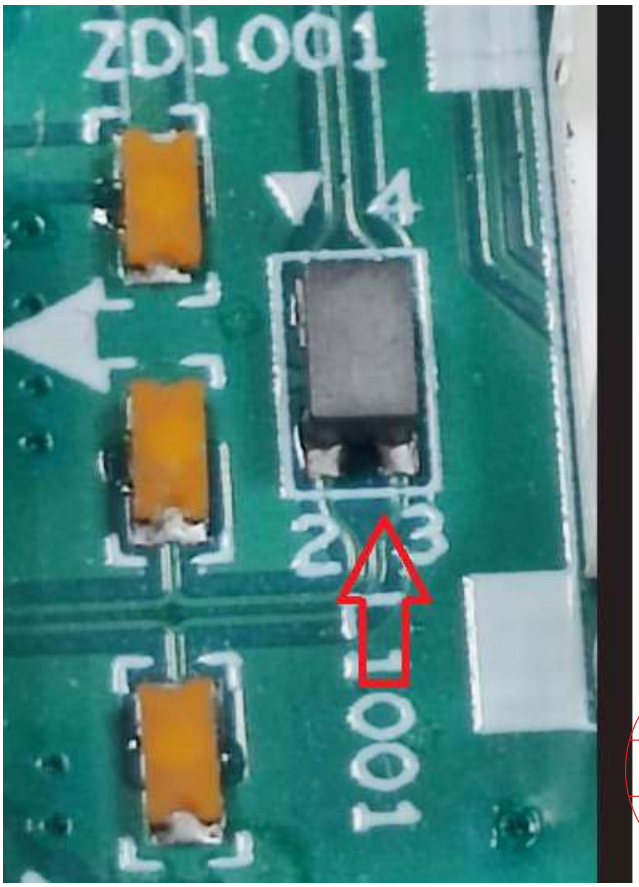

設計驗證
工程課
2024-12-19
發行

RoHS & Halogen Free & REACH Compliance.

SPECIFICATION FOR APPROVAL

Customer :	鈺緯
Customer P/N:	**6J.10280.001 / 3LFBC00661Y** (L0195)
Drawing No :	**QC010241205456**
Quantity :	**0** **Pcs.** **Date :** **2024/12/04**
Pulse P/N :	**CUW21T-900M-N**

SPECIFICATION ACCEPTED BY:	
COMPONENT ENGINEER	設計驗證 工程課 2024-12-19 發行 鈺緯科技開發股份有限公司
ELECTRICAL ENGINEER	
MECHANICAL ENGINEER	
APPROVED	
REJECTED	

Chilisin Electronics Corp
No. 29, Alley 301, Tehhsin Rd.,
Hukou,Hsinchu 303, Taiwan
TEL：+886-3- 599-2646
FAX：+886-3- 599-9176
E-mail：sales@chilisin.com
http：//www.chilisin.com

Chilisin Electronics (Dongguan) Co., Ltd.
No. 78, Puxing Rd., Yuliangwei Administration Area,
Qingxi Town, Dongguan City, Guangdong,China
TEL：+86-769-8773-0251~3
FAX： +86-769-8773-0232
E-mail：cect@chilisin.com

Chilisin Electronics (Vietnam) Limited
No 143 - 145, Road No 10, VSIP Hai Phong,
Lap Le Commune, Thuy Nguyen Dist,
Haiphong City, Vietnam
Tel：84-316 255 688
Fax：84-316 255 689
E-mail：sales@chilisin.com

HuNan Chilisin Electronics Technology Co., Ltd
No. 8, Shaziao Liangshuijing Town, Yuanling
County, Huaihua City, Hunan Province 419601,
China
Tel：86-745-867-5882
E-mail：cect@chilisin.com

Applied by	Checked by	Approved by

CUW21T Series Specification

1 Scope:

This specification applies to CUW Wire Wound Common Mode Choke Coil

2 Part Numbering:

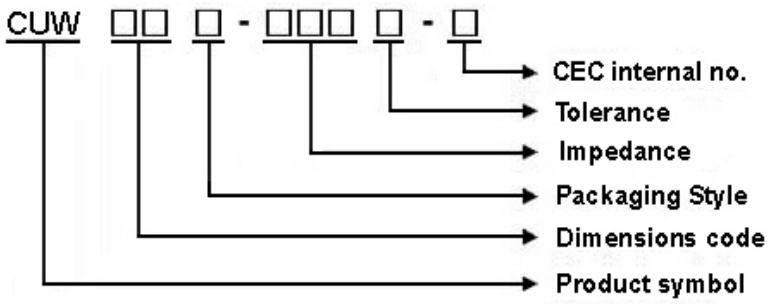

3 Rating:

Operating Temperature: - 40℃ ~ 105℃
(Including self - temperature rise)

Storage Temperature: - 40℃ ~ 105℃
(The storage temperature range is for after the assembly)

4 Marking:

No Marking

5 Standard Testing Condition

	Unless otherwise specified	In case of doubt
Temperature	Ordinary Temperature(15 to 35℃)	20 to 30℃
Humidity	Ordinary Humidity(25 to 85% RH)	50 to 80 %RH

CUW21T Series Specification

6 Configuration and Dimensions and Unit Weight:

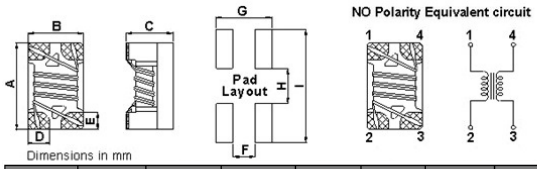

Dimensions in mm

TYPE	A	B	C	D	E	F	G	H	I
CUW21	2.05±0.2	1.25±0.2	1.20±0.2	0.50	0.5	0.4	1.27	1.1	2.6

Net Weight (grms)

SIZE CODE	Net Weight (grms)
CUW21	0.0129 (typ.)

7 Electrical Characteristics:

Part No.	Z (Ω)	RDC (Ω)Max.	IDC (mA)	Rated Voltage (Vdc)	Withstanding Voltage (Vdc)	Insulation Resistance (MΩ)(min)	Tolerance (±%)	Test Freq. (MHz)
CUW21T-300□-N	30	0.2	450	50	125	10	M,Y	100
CUW21T-670□-N	67	0.25	400	50	125	10	M,Y	100
CUW21T-750□-N	75	0.3	360	50	125	10	M,Y	100
CUW21T-900M-N	90	0.35	330	50	125	10	M,Y	100
CUW21T-121□-N	120	0.3	400	50	125	10	M,Y	100
CUW21T-161□-N	160	0.35	350	50	125	10	M,Y	100
CUW21T-181□-N	180	0.35	330	50	125	10	M,Y	100
CUW21T-201□-N	200	0.35	330	50	125	10	M,Y	100
CUW21T-221□-N	220	0.35	310	50	125	10	M,Y	100
CUW21T-261□-N	260	0.4	300	50	125	10	M,Y	100
CUW21T-301□-N	300	0.4	290	50	125	10	M,Y	100
CUW21T-361□-N	360	0.45	280	50	125	10	M,Y	100
CUW21T-371□-N	370	0.45	280	50	125	10	M,Y	100
CUW21T-391□-N	390	0.45	280	50	125	10	M,Y	100
CUW21T-491□-N	490	0.55	170	50	125	10	M,Y	100
CUW21T-501□-N	500	0.55	170	50	125	10	M,Y	100
CUW21T-671□-N	670	0.6	140	50	125	10	M,Y	100
CUW21T-801□-N	800	0.88	300	50	125	10	M,Y	100
CUW21T-901□-N	900	0.6	80	50	125	10	M,Y	100
CUW21T-921□-N	920	0.75	80	50	125	10	M,Y	100
CUW21T-102□-N	1000	0.8	150	50	125	10	M,Y	100
CUW21T-202□-N	2000	2.2	150	50	125	10	M,Y	100

NOTE: □-tolerance M=±20%/Y=±25%

1.Operating temperature range - 40℃ ~ 105℃(Including self - temperature rise)

2.RDC: SINGLE WIRE TEST VALUE

3.IDC for Inductance drop 10% from its value without current.

CUW21T Series Specification

8 CUW21 Series

8.1 Construction:

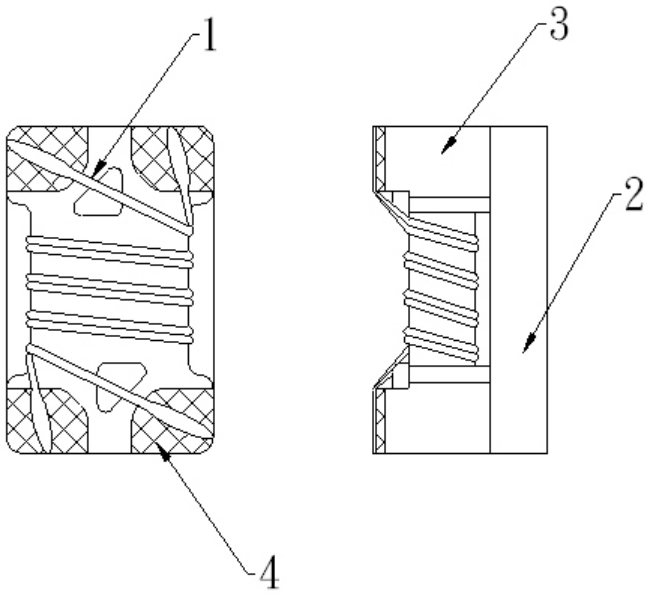

8.2 Material List:

NO	PART	MATERIAL
1	WIRE	Grade 180
2	COVER SHEET	FERRITE CORE
3	CORE	FERRITE CORE
4	TERMINAL	Ag/Cu/Ni/Sn

CUW21T Series Specification

9 Common Mode Choke / RELIABILITY TEST

1-1.Environmental Performance

No	Item	Specification	Test Method
1-1-1	Temperature Cycle	Appearance: No Damage Impedance: within±20% of initial value	One cycle: Step / Temperature (℃) / Time (min) 1 / -40±3 / 30 2 / 25±2 / 3 3 / 105±3 / 30 4 / 25±2 / 3 Total: 5 cycles Measured After Exposure in The Room Condition For 1hrs
1-1-2	High Temperature Resistance		Temperature: 105±3℃ Time: 1000Hrs Measured After Exposure In The Room Condition For 1Hrs
1-1-3	Low Temperature Resistance		Temperature: -40±3℃ Time: 1000Hrs Measured After Exposure In The Room Condition For 1Hrs
1-1-4	Humidity Load Life	There should be no evidence of short or open circle	Temperature: 40±2℃ Relative Humidity: 90~95% Load: Allowed DC Current Time: 96Hrs

1-2.Mechanical Performance

No	Item	Specification	Test Method
1-2-1	Resistance To Soldering Heat	Appearance: No Damage	1. The device should be reflow soldered on PCB (peak 260℃±5℃ for 10 seconds) 2. Solder Composition: Sn/Ag3.0/Cu0.5 3. Test time: 6 minutes
1-2-2	Solder ability	The electrodes shall be at least 95% covered with new solder coating	1. Pre-Heating: 150℃,1min. 2. Solder Composition: Sn/Ag3.0/Cu0.5 3. Solder Temperature: 245±5℃. 4. Immersion Time: 4±1 sec.
1-2-3	Commponent Adhesion (Push Test)	1 Lbs. For 1210 Size 2 Lbs. For other	The device should be reflow soldered (245±5℃ For 10 seconds) to a tinned copper substrate. A force guauge should be applied to the side of the component. The device must withstand a minimum force of 2 pounds without a failure of the termination attached to component

CUW21T Series Specification

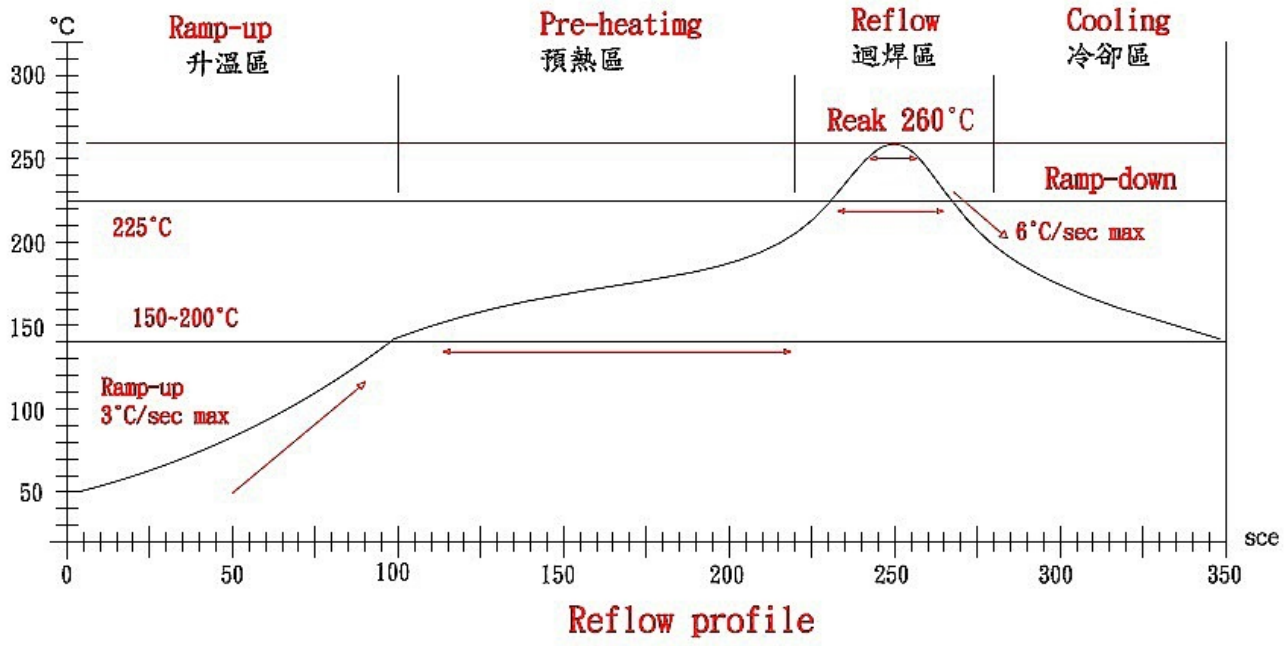

Reflow profile

Lead-Free(LF)標準溫度分析範圍 Refer to J-STD-020C

管制項目 Item.	升溫區 Ramp-up	預熱區 Pre-heating	迴焊區 Reflow	Reak Temp	冷卻區 Cooling
溫度範圍 Temp. scope	R.T.~150℃	150℃~200℃	Above 217°C	260±5℃	Reak Temp.~150℃
實際時間 Time result	—	60~180 sec	20~60 sec	5~10 sec	—

NOTE:

1.Re-flow possible times : within 3 times
2.Nitrogen adopted is recommendes while in re-flow
3.Products can only be soldered with reflow

CUW21T Series Specification

10 Packaging:

10.1 Packaging -Cover Tape

The force for tearing off cover tape is 10 to 100 grams in the arrow direction.

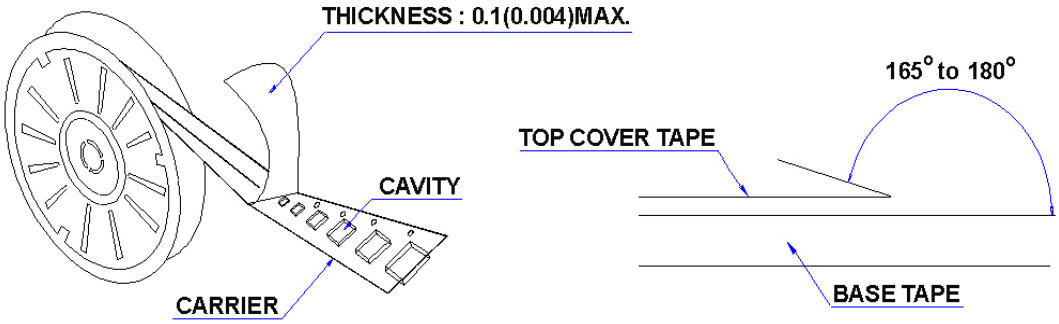

10.2 Packaging Quantity

TYPE	PCS/REEL
CUW21	2000

10.3 Reel Dimensions

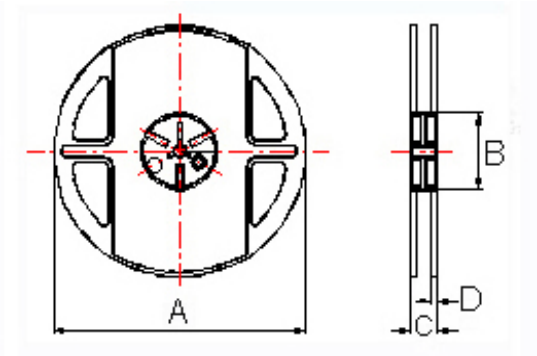

Dimensions in mm

TYPE	A	B	C	D
CUW21	178±1	60±0.5	12±0.5	1.5±0.5

CUW21T Series Specification

10 Packaging:

10.4 Tape Dimensions in mm

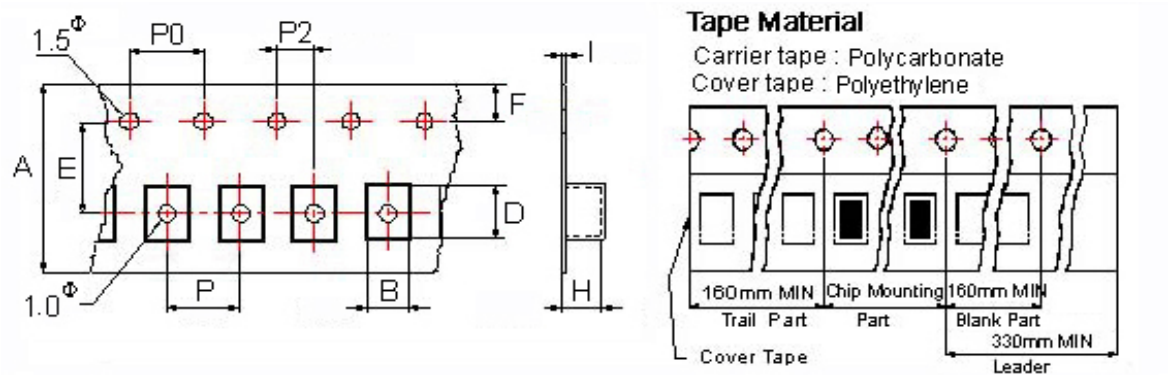

TYPE	A	B	D	E	F	H	I	P	P0	P2
CUW21	8	1.50	2.25	3.5	1.75	1.35	0.24	4	4	2

11 Note:

1. Please make sure that your product has been evaluated and confirmed against your specifications when our product is mounted to your product.
2. Do not knock nor drop.
3. All the items and parameters in this product specification have been prescribed on the premise that our product is used for the purpose,under the condition and in the environment agreed upon between you and us. You are requested not to use our product deviating from such agreement.
4. The storage period is less than 12 months. Be sure to follow the storage conditions (Temperature: 5 to 40°C, Humidity: 10 to 75% RHor less).
   If the storage period elapses, the soldering of the terminal electrodes may deteriorate.
5. Do not use or store in locations where there are conditions such as gas corrosion (salt, acid, alkali, etc.).
6. The moisture sensitivity level (MSL) of products is classified as level 1.

CUW21T Series Specification

12 Graph: CUW21T-900-N

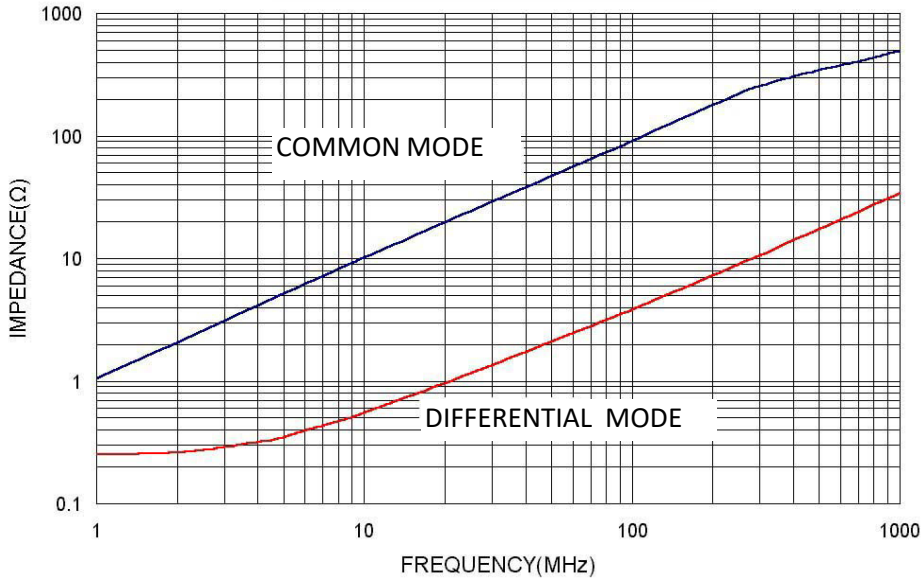

CUW21T Series Specification

13 TDR For HDMI2.0 Testing:

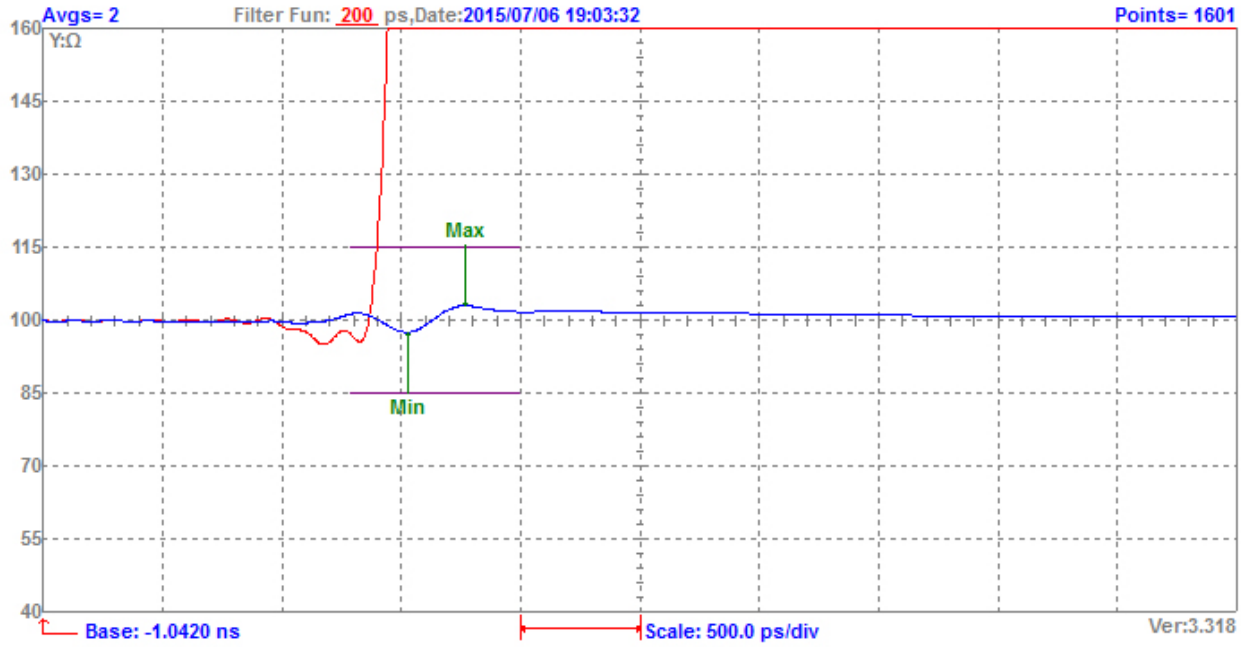

Parameter Name: HDMI Choke Impedance C1	
Spc Max: 115 Ω	Spc Min: 85 Ω
Max:103.05 Ohms at 0.7237 ns	Min:97.62 Ohms at 0.4830 ns
ΔΩ: 5.43	Avg: 100.34 Ohms
	Result: Pass

14 Eye DiagramFor USB2.0 HDMI Testing:

Typical Differential Mode Attenuation

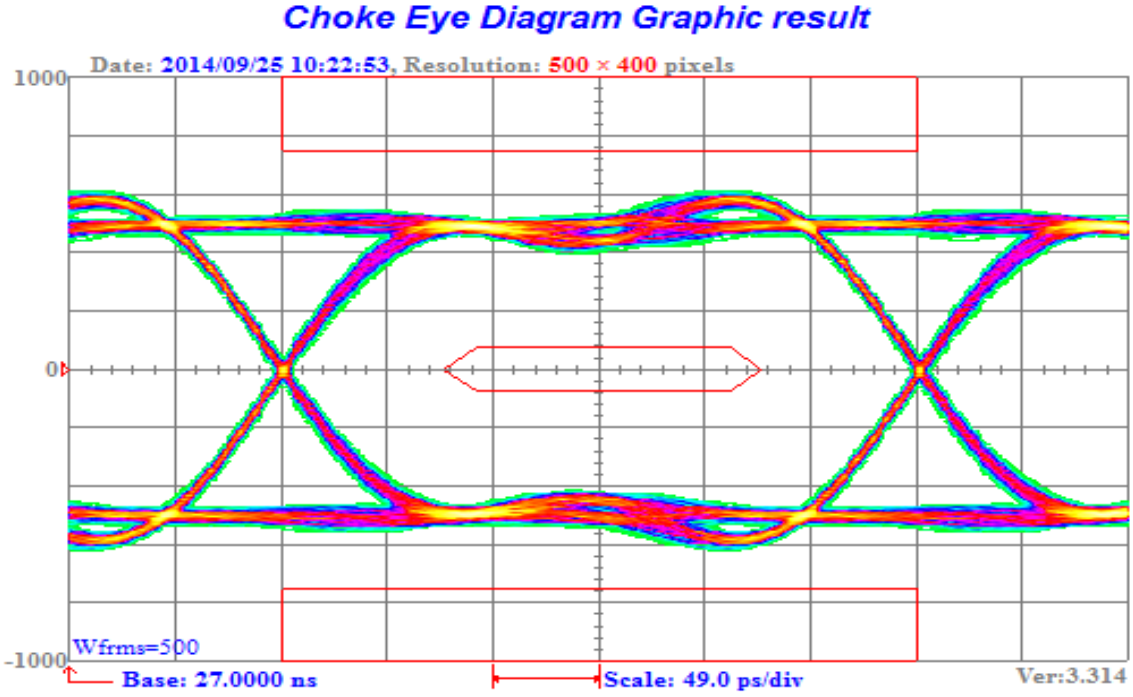

Parameter Name: Choke Eye Diagram C1	
Display Mode: Not a standard mode	
dRate: 3.4 Gbits/s; 294.1 ps	V: 500 mV;Gain: 0 dB;Off: 0 mV
CAL: DONE,JGen: OFF	Result: Pass

CUW21T Series Specification

15 Typical Dfferential Mode Attenuation

