承 認 書

客戶名稱	鈺緯科技	品名規格	EPIQ(VM14.0)LVDS Cable
客戶料號	3KH00307000	稳德料号	
使用機型		成品單重	
認可日期	2024年11月26日	材料種類	

客戶簽認		
核　准	核對	經辦

廠商簽認		
核　准	核 對	經 辦
	陳熙偉	曾貴梅

东莞穩德電子有限公司

地址：廣東省東莞市虎門鎮新聯高科技工業區

TEL:(0769)85509740　　FAX:(0769)85504618

http://www.wentek.com.tw　　E-mail:sales@dgwender.com.cn

RoHS Compliant

DRAWING:
(成品圖)

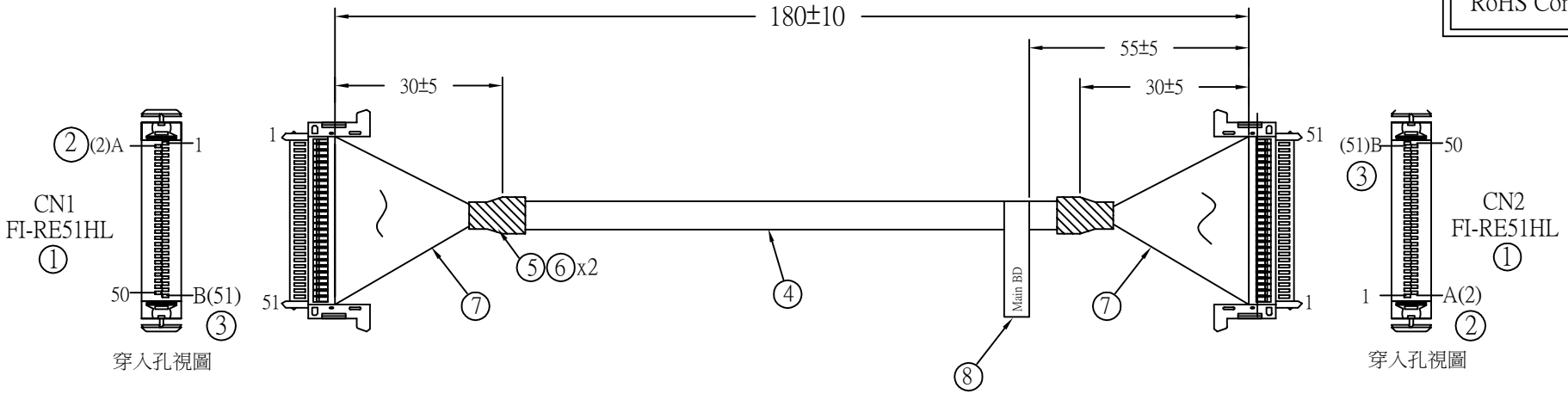

	CN 1	COLOR	CN 2
對絞	12	黑	23
	13	黑/白	22
對絞	14	棕	20
	15	棕/白	19
對絞	16	紅	17
	17	紅/白	16
對絞	19	橙/白	15
	20	橙	14
對絞	22	黃	13
	23	黃/白	12
對絞	28	綠	36
	29	綠/白	35
對絞	30	藍	33
	31	藍/白	32
對絞	32	紫	31
	33	紫/白	30
對絞	35	灰/白	29
	36	灰	28
對絞	38	粉	25
	39	粉/白	24

CN 1	COLOR	CN 2
1	黑+編織	1
11	黑+編織	11
18	黑+編織	18
21	黑+編織	21
26	黑+編織	26
27	黑+編織	27
34	黑+編織	34
37	黑+編織	37
42	黑+編織	42
43	黑+編織	43
44	黑+編織	44
45	黑+編織	45
46	黑+編織	46
48	黑	48
49	棕	49
50	紅	50
51	橙	51

備註：
1、裁線長度：1.5 x 192 x 1.5
1.5 x 35 x 4.0
剝皮尺寸：35 x 192 x 35
2、多餘芯線：黃,綠,藍,紫,灰,白,剪除
3、測試條件:
>測試電壓:300 V.DC.
>導通阻抗:2Ω(MAX).
>絕緣阻抗:20MΩ(MIN).

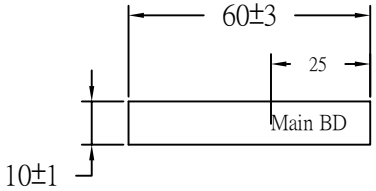

NO. 項次	Description 規格說明	Unit 單位	Q"TY 單用量	Remark 備注
8	標籤:10*60 內容 : Main BD	PCS	1	
7	1571#28 OD:0.6 黑, L=35	PCS	26	眾達
6	黑色熱縮套管：⌀4.0x10	PCS	2	領飛
5	黑色熱縮套管: § 8.0x20	PCS	2	領飛
4	UL20276#30(10P+10C)+AB OD:5.9 黑 L=192mm	PCS	1	慶龍
3	TER:FI-RC3-1B-1E-15000	PCS	38	JAE
2	TER:FI-RC3-1A-1E-15000	PCS	36	JAE
1	HSG:FI-RE51HL	PCS	2	JAE

No. 項次	Date 日期	Design Change Record 變更記錄	Confirm 確認

Approval 檢查規范			
Approve 核准	Check 复核	Confirm 確認	Draw By 繪圖

ISSUE NO. 版次	第三角畫法 3RD ANGLE PROJ Unit : mm 單位	Customer 客戶名稱	鈺緯科技
		Drawing No. 品名	EPIQ(VM14.0)LVDS Cable
A	Date of drawing : 製圖日期 2024.11.25	PART NO. 料號	3KH00307000
		DRAW NO. 繪圖編號	

WEN DE ELECTRONICS CO.,LTD

NEW

内部シリアル伝送用ｺﾈｸﾀ
FI-Rｼﾘｰｽﾞ

CONNECTOR
MB-0153-4
2013/6

RoHS対応品

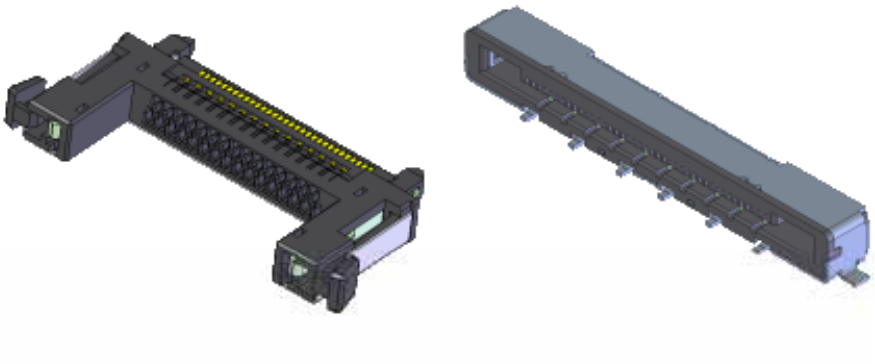

《概要》LVDS、TMDS（HDMI）、PCIｴｸｽﾌﾟﾚｽを始めとした高速ｼﾘｱﾙ伝送は、PC市場のみならず、TVを始めとする民生機器、PPC、医療機器等の市場でも、多く使用されるようになってきました。高速ﾃﾞｼﾞﾀﾙ信号の伝送に加え、ｺﾈｸﾀ嵌合の容易さや強度面等の機械的な要求もｺﾈｸﾀに求められております。FI-Rｺﾈｸﾀは、まさにこれらのﾆｰｽﾞを満足させるｺﾈｸﾀです。

特　　長

■端子ピッチ 0.5 ㎜。ｺﾈｸﾀ高さ 3.8 ㎜。21、31、41、51芯に対応したｺﾝﾊﾟｸﾄ設計。

■ﾌﾟﾗｸﾞ側の大きな嵌合ｶﾞｲﾄﾞで、嵌合性良好。

■基板側には、嵌合側へも半田付け固定部があり、基板保持強度良好。

■差動特性ｲﾝﾋﾟｰﾀﾞﾝｽ 100 Ωにﾏｯﾁﾝｸﾞ。また、ｼｪﾙ及びﾎｰﾙﾄﾞﾀﾞｳﾝの構造を工夫し、ｸﾞﾗﾝﾄﾞを強化。

■基板側ﾗｲﾄｱﾝｸﾞﾙﾀｲﾌﾟまたはｽﾄﾚｰﾄﾀｲﾌﾟ、自由に選択でき、基板ﾊﾟﾀｰﾝ共用可。

■未嵌合防止及び嵌合抜け防止の為のﾒｶﾆｶﾙﾛｯｸﾀｲﾌﾟ。

■ｹｰﾌﾞﾙ側は、圧着ﾃﾞｨｽｸﾘｰﾄ、半田付け細線同軸、FFCﾀｲﾌﾟ等用途に合わせて選択可。

■液晶TV用LCDｲﾝﾀｰﾌｪｲｽにおいて、VESAｽﾀﾝﾀﾞｰﾄﾞｺﾈｸﾀに採用されております。

JAE PMK Div. Proprietary. Copyright © 2013, Japan Aviation Electronics Industry, Ltd.

一 般 仕 様



基板側ｺﾈｸﾀ

A1．FI-RE**S-HF（基板側　ﾗｲﾄｱﾝｸﾞﾙ ｼｪﾙﾀｲﾌﾟ）

A2．FI-RE**S-VF（基板側　ｽﾄﾚｰﾄ ｼｪﾙﾀｲﾌﾟ ）

■極数　：21、31、41、51芯　■定格電流　：AC,DC各0.8A/1端子当たり

■接触抵抗　：50mΩ以下　■絶縁抵抗　：100MΩ以上

■耐電圧　：AC500Vr.m.s一分間　■ﾋﾟｯﾁ　：0.5mm

■使用温度　：-40℃～+80℃



ｹｰﾌﾞﾙ側圧着ﾀｲﾌﾟ

B1．　FI-RE**HL　（圧着ﾊｳｼﾞﾝｸﾞ、ﾒｶﾆｶﾙﾛｯｸ及びｼｪﾙﾀｲﾌﾟ）

B2．　FI-RC3-1A-1E-15000　（圧着ﾊｳｼﾞﾝｸﾞ用上段ｺﾝﾀｸﾄ）

B3．　FI-RC3-1B-1E-15000　（圧着ﾊｳｼﾞﾝｸﾞ用下段ｺﾝﾀｸﾄ）

■極数　：21、31、41、51芯　■定格電流　：AC,DC各0.7A/1端子当たり

■接触抵抗　：50mΩ以下　■絶縁抵抗　：100MΩ以上

■耐電圧　：AC500Vr.m.s一分間　■ﾋﾟｯﾁ　：0.5mm

■使用温度　：-40℃～+80℃　■適合電線　：　AWG#30,32,36



ｹｰﾌﾞﾙ側半田付けﾀｲﾌﾟ

C1．　FI-RE**CL　（半田付け、ﾒｶﾆｶﾙﾛｯｸ及びｼｪﾙﾀｲﾌﾟ ）

C2．　FI-RE**CL-SH2-3000　（ｹｰﾌﾞﾙ側　半田付けﾀｲﾌﾟ用ｶﾊﾞｰｼｪﾙ）

■極数　：21、31、41、51芯　■定格電流　：AC,DC各0.7A/1端子当たり

■接触抵抗　：50mΩ以下　■絶縁抵抗　：100MΩ以上

■耐電圧　：AC500Vr.m.s一分間　■ﾋﾟｯﾁ　：0.5mm

■使用温度　：-40℃～+80℃　■適合電線　：COAXIAL CABLE AWG#40

JAE PMK Div. Proprietary. Copyright © 2013, Japan Aviation Electronics Industry, Ltd.

材料 ・ 仕上

基板側ｺﾈｸﾀ

A1.　FI-RE**S-HF　（基板側　ﾗｲﾄｱﾝｸﾞﾙ ｼｪﾙﾀｲﾌﾟ）

構成部品	材料／仕上
ｺﾝﾀｸﾄ	銅合金／接触部 金、SMT端子部 ｽｽﾞﾒｯｷ
ｲﾝｼｭﾚｰﾀ	耐熱性ﾌﾟﾗｽﾃｨｯｸ／無し
ｼｪﾙ	ｽﾃﾝﾚｽ／無し



A2.　FI-RE**S-VF　（基板側　ｽﾄﾚｰﾄ ｼｪﾙﾀｲﾌﾟ）

構成部品	材料／仕上
ｺﾝﾀｸﾄ	銅合金／接触部 金、SMT端子部 ｽｽﾞﾒｯｷ
ｲﾝｼｭﾚｰﾀ	耐熱性ﾌﾟﾗｽﾃｨｯｸ／無し
ｼｪﾙ	ｽﾃﾝﾚｽ／無し



ｹｰﾌﾞﾙ側圧着ﾀｲﾌﾟ

B1.　FI-RE**HL　（圧着ﾊｳｼﾞﾝｸﾞ　ﾒｶﾆｶﾙﾛｯｸ及びｼｪﾙﾀｲﾌﾟ）

構成部品	材料／仕上
圧入ｼｪﾙ	銅合金／ｽｽﾞﾒｯｷ
ｲﾝｼｭﾚｰﾀ	耐熱性ﾌﾟﾗｽﾃｨｯｸ／無し
ﾛｯｸｽﾌﾟﾘﾝｸﾞ	ｽﾃﾝﾚｽ／無し



ｹｰﾌﾞﾙ側圧着ﾀｲﾌﾟ

B2.　FI-RC3-1A-1E-15000　（圧着ﾊｳｼﾞﾝｸﾞ用上段ｺﾝﾀｸﾄ）

構成部品	材料／仕上
ｺﾝﾀｸﾄ	りん青銅／接触部 金、結線部 ｽﾞｽﾞﾒｯｷ



B3.　FI-RC3-1B-1E-15000　（圧着ﾊｳｼﾞﾝｸﾞ用下段ｺﾝﾀｸﾄ）

構成部品	材料／仕上
ｺﾝﾀｸﾄ	りん青銅／接触部 金、結線部 ｽﾞｽﾞﾒｯｷ



JAE PMK Div. Proprietary. Copyright © 2013, Japan Aviation Electronics Industry, Ltd.

材料 ・ 仕上

ｹｰﾌﾞﾙ側半田付けﾀｲﾌﾟ

C1. FI-RE**CL （半田付け、ﾒｶﾆｶﾙﾛｯｸおよびShellﾀｲﾌﾟ）

構成部品	材料／仕上
ｺﾝﾀｸﾄ	銅合金／接触部 金、結線部 ｽｽﾞﾒｯｷ
圧入ｼｪﾙ	銅合金／ｽｽﾞﾒｯｷ
ｲﾝｼｭﾚｰﾀ	耐熱性ﾌﾟﾗｽﾃｨｯｸ／無し
ﾛｯｸｽﾌﾟﾘﾝｸﾞ	ｽﾃﾝﾚｽ／無し

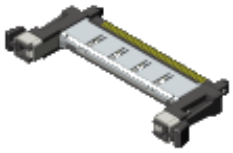

C2. FI-RE**CL-SH2-3000 （半田付けﾀｲﾌﾟ用ｶﾊﾞｰｼｪﾙ）

構成部品	材料／仕上
ｶﾊﾞｰｼｪﾙ	ｽﾃﾝﾚｽ／無し



JAE PMK Div. Proprietary. Copyright © 2013, Japan Aviation Electronics Industry, Ltd.

品 名 構 成

基板側ﾗｲﾄｱﾝｸﾞﾙShellﾀｲﾌﾟ 単品 (SJ102934)

命名法

FI-R E ** S - HF

- FI-R：ｼﾘｰｽﾞ名
- E：ｼｪﾙﾀｲﾌﾟ
- **：極数：21,31,41,51芯
- S：基板側
- HF：ﾗｲﾄｱﾝｸﾞﾙﾀｲﾌﾟ



A1

単位：mm

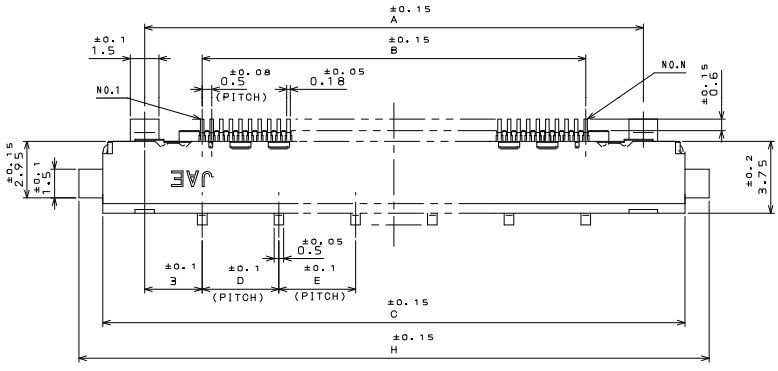

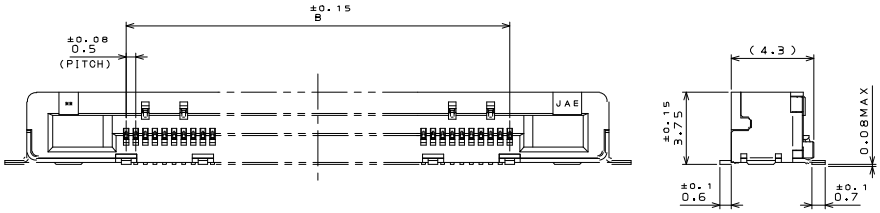

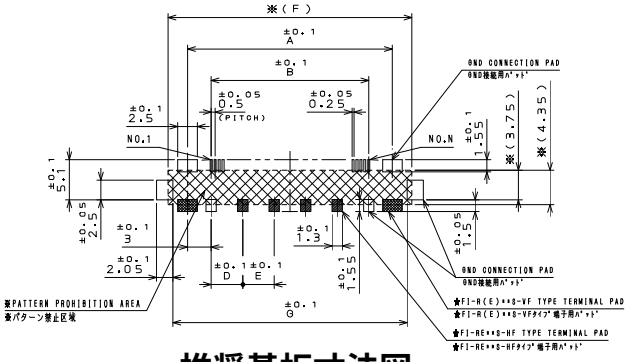

推奨基板寸法図

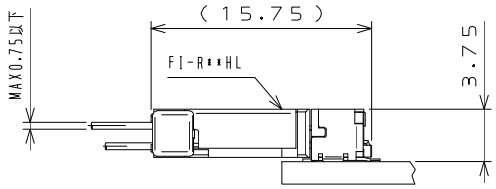

嵌合状態図 (参考)

寸法表

NO.OF CONTACTS(N) \ DEMENSION	A	B	C	D	E	F	G	H
21	16	10	20.35	3	—	20.95	19.75	22.85
31	21	15	25.35	4	—	25.95	24.75	27.85
41	26	20	30.35	4	4	30.95	29.75	32.85
51	31	25	35.35	5	5	35.95	34.75	37.85

JAE PMK Div. Proprietary. Copyright © 2013, Japan Aviation Electronics Industry, Ltd.

品 名 構 成　基板側ﾗｲﾄｱﾝｸﾞﾙShellﾀｲﾌﾟ　ｴﾝﾎﾞｽ(SJ102937)

命名法

FI-R　E　**　S　-HF　–　R1500

- FI-R：ｼﾘｰｽﾞ名
- E：ｼｪﾙﾀｲﾌﾟ
- **：極数：21,31,41,51芯
- S：基板側
- HF：ﾗｲﾄｱﾝｸﾞﾙﾀｲﾌﾟ
- R1500：ｴﾝﾎﾞｽ1500個巻



A1

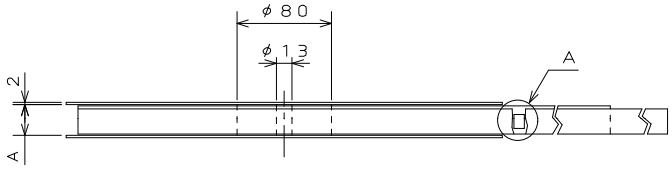

単位：mm

寸法表

NO.OF CONTACT	A	B	C	D	E
21	46	44	20.2	40.4	23.85
31	46	44	20.2	40.4	28.85
41	58	56	26.2	52.4	33.85
51	58	56	26.2	52.4	38.85

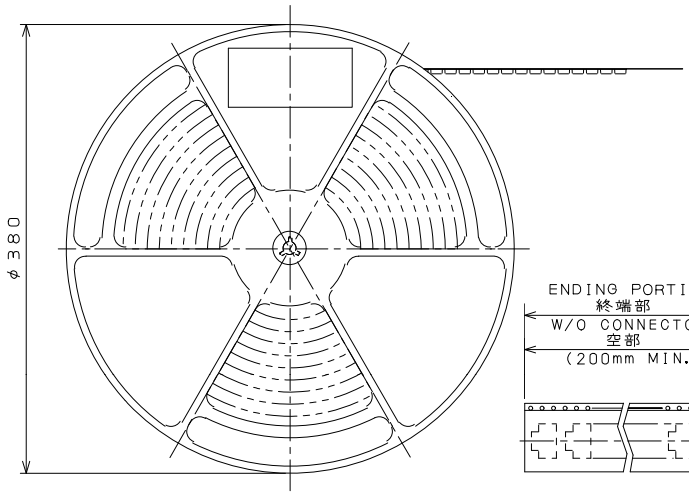

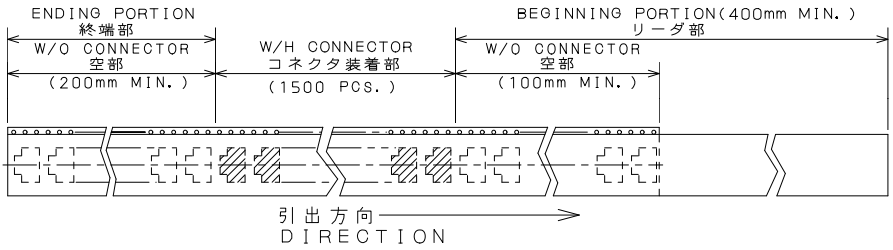

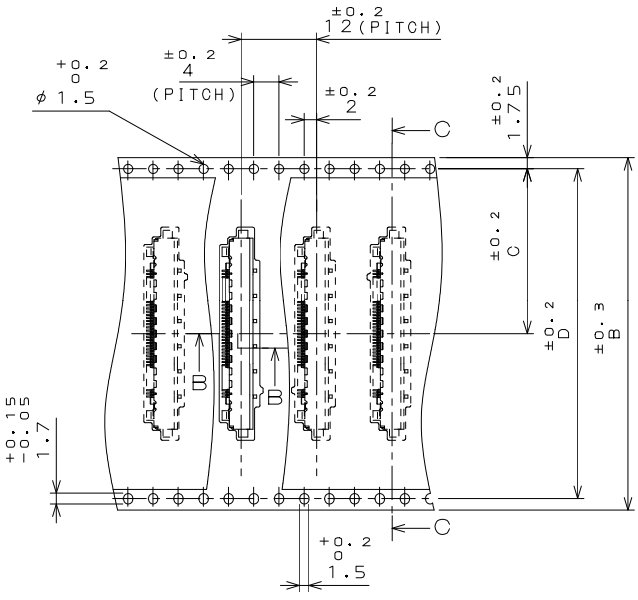

DETAIL A
A部詳細図
(SCALE 1:1)

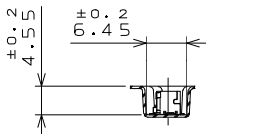

SECT. B−B
断面B−B
(SCALE 1:1)

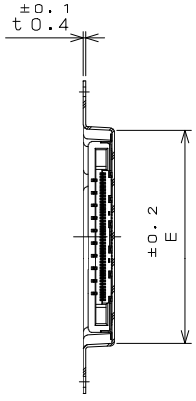

SECT. C−C
断面C−C
(SCALE 1:1)

JAE PMK Div. Proprietary. Copyright © 2013, Japan Aviation Electronics Industry, Ltd.

品 名 構 成

基板側ｽﾄﾚｰﾄShellﾀｲﾌﾟ 単品 (SJ102933)

命名法

FI-R E ** S - VF

- FI-R E: ｼﾘｰｽﾞ名
- E: ｼｪﾙﾀｲﾌﾟ
- **: 極数：21,31,41,51芯
- S: 基板側
- VF: ｽﾄﾚｰﾄﾀｲﾌﾟ



A2

単位：mm

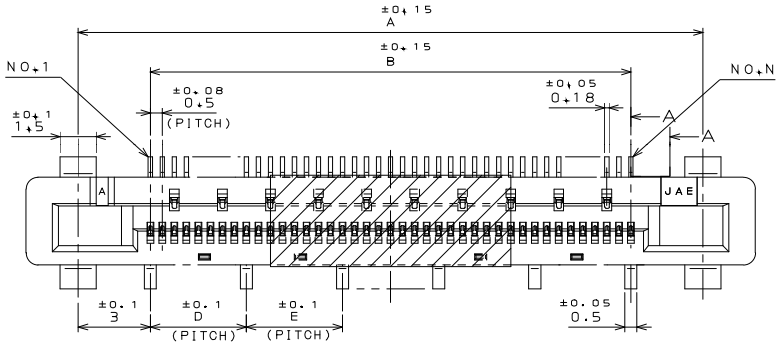

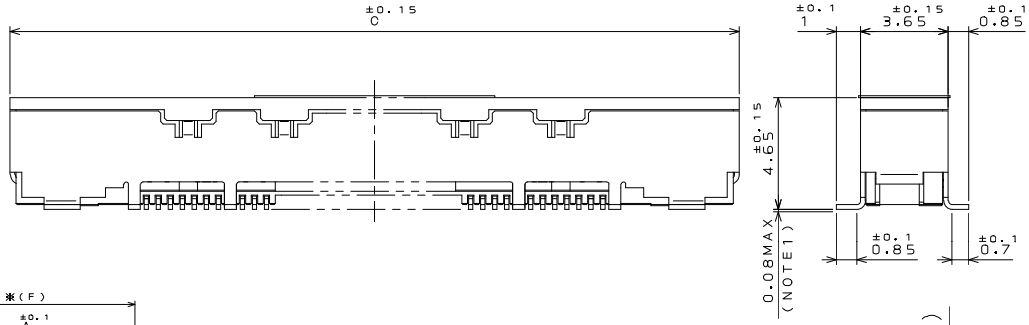

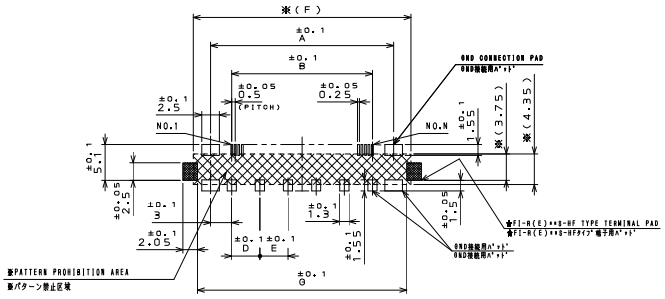

推奨基板寸法図

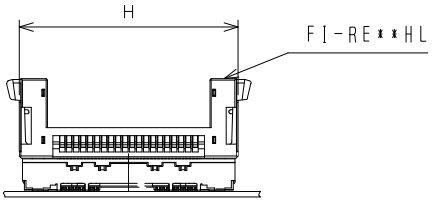

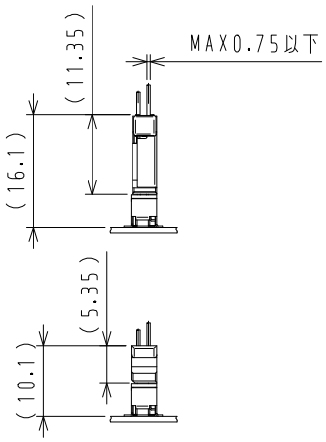

嵌合状態図 (参考)

寸法表

DEMENSION / NO.OF CONTACTS(N)	A	B	C	D	E	F	G	H
21	16	10	20.35	3	——	20.95	19.75	21.25
31	21	15	25.35	4	——	25.95	24.75	26.25
41	26	20	30.35	4	4	30.95	29.75	31.25
51	31	25	35.35	5	5	35.95	34.75	36.25

JAE PMK Div. Proprietary. Copyright © 2013, Japan Aviation Electronics Industry, Ltd.

品 名 構 成

基板側Shellタイプ エンボス(SJ102936)

命名法

FI-R E ** S - VF – R1300

- FI-R: シリーズ名
- E: シェルタイプ
- **: 極数：21,31,41,51芯
- S: 基板側
- VF: ストレートタイプ
- R1300: エンボス1300個巻



A2

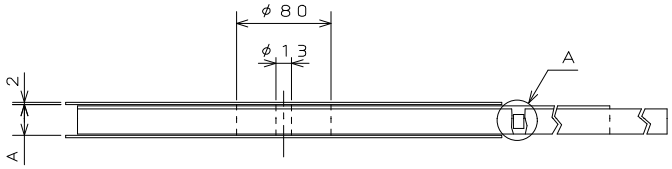

単位：mm

寸法表

NO.OF CONTACT	A	B	C	D	E
21	46	44	20.2	40.4	20.6
31	46	44	20.2	40.4	25.6
41	58	56	26.2	52.4	30.6
51	58	56	26.2	52.4	35.6

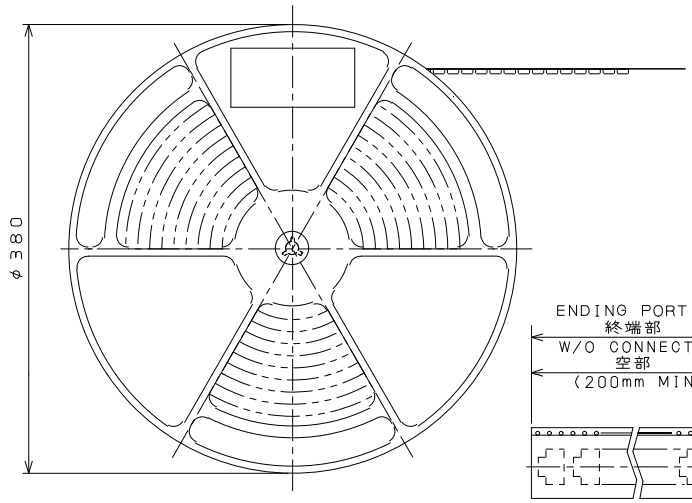

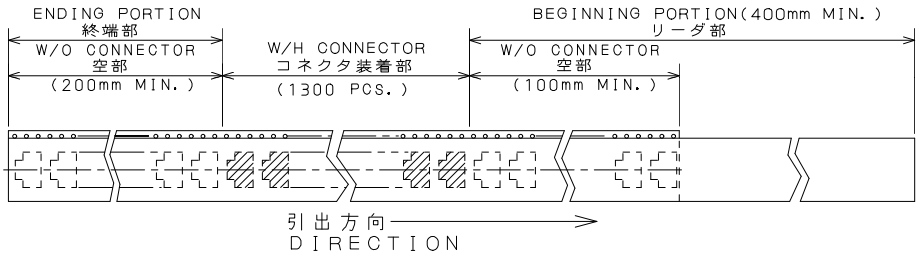

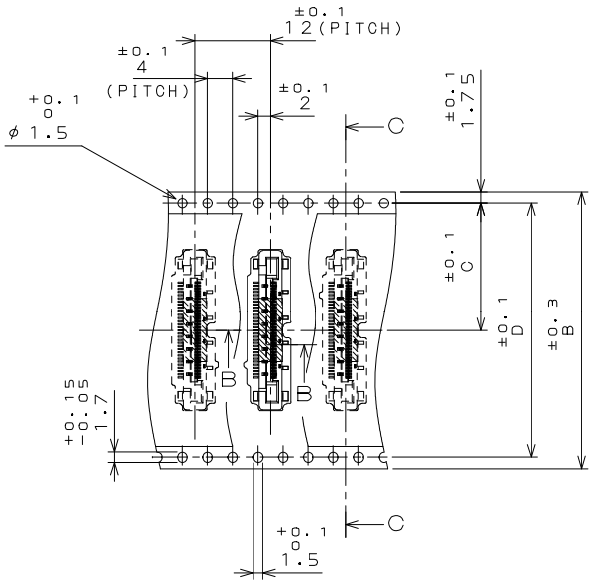

DETAIL A
A部詳細図
(SCALE 1:1)

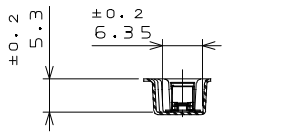

SECT. B−B
断面B−B
(SCALE 1:1)

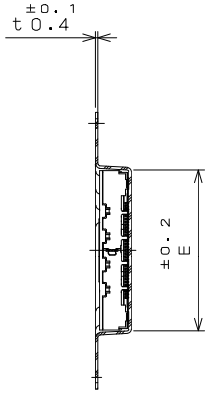

SECT. C−C
断面C−C
(SCALE 1:1)

JAE PMK Div. Proprietary. Copyright © 2013, Japan Aviation Electronics Industry, Ltd.

品 名 構 成　圧着ﾊｳｼﾞﾝｸﾒｶﾆｶﾙﾛｯｸ及びShellﾀｲﾌﾟ 単品 (SJ103279)

命名法

FI-R　E　**　H　L

- FI-R：ｼﾘｰｽﾞ名
- E：ｼｪﾙﾀｲﾌﾟ
- **：極数：21,31,41,51芯
- H：ｹｰﾌﾞﾙ側圧着ﾀｲﾌﾟ
- L　：ﾒｶﾆｶﾙﾛｯｸあり



B1

単位：mm

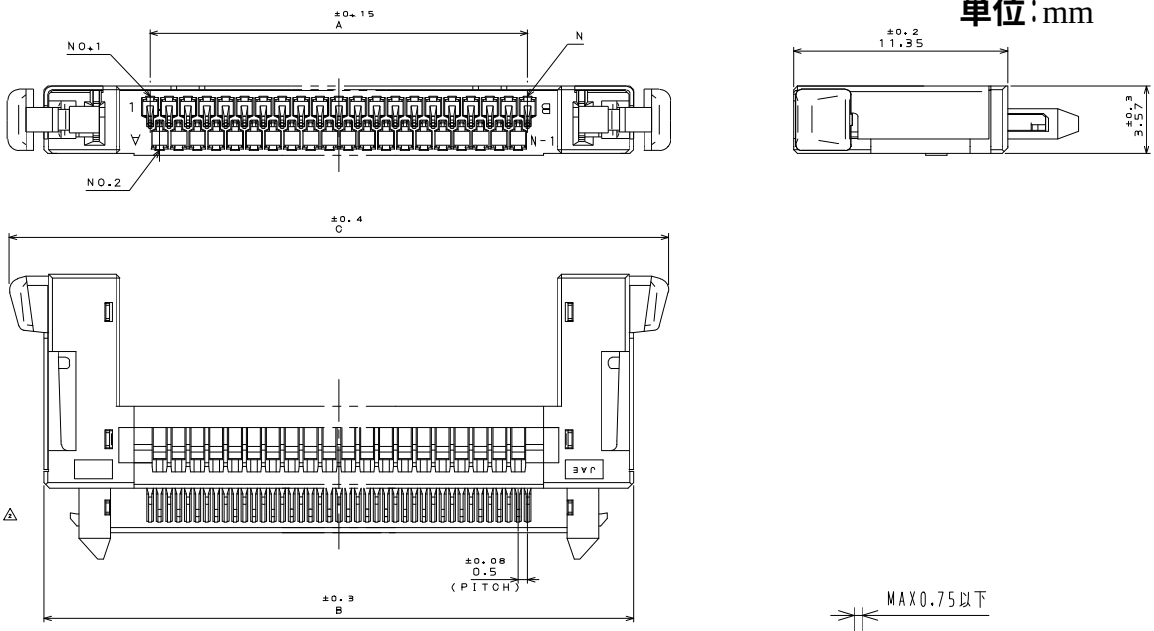

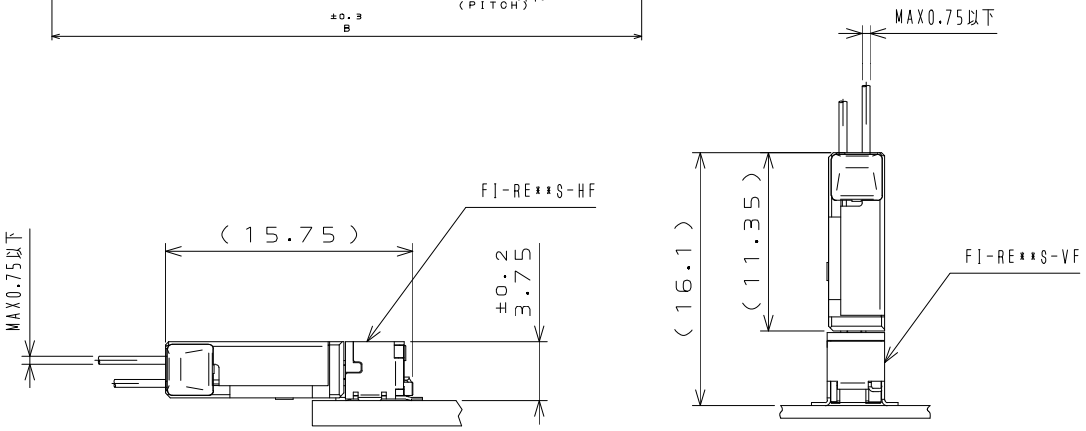

嵌合状態図(参考)

寸法表

NO.OF CONTACTS(N) \ DEMENSION	A	B	C
21	10	21.25	24.95
31	15	26.25	29.95
41	20	31.25	34.95
51	25	36.25	39.95

JAE PMK Div. Proprietary. Copyright © 2013, Japan Aviation Electronics Industry, Ltd.

品 名 構 成

圧着ﾊｳｼﾞﾝｸﾞ用上段ｺﾝﾀｸﾄ(SJ103060)



命名法

FI-R C3 – 1A – 1E – 15000

- FI-R：ｼﾘｰｽﾞ名
- C3：圧着ﾊｳｼﾞﾝｸﾞ用ｺﾝﾀｸﾄ
- 1A：上段ｺﾝﾀｸﾄ
- 1E：ﾓﾃﾞｨﾌｨｹｰｼｮﾝｺｰﾄﾞ **B2**
- 15000：ﾏｶﾞｼﾞﾝｱｾﾝﾌﾞﾘ15000本/ﾘｰﾙ

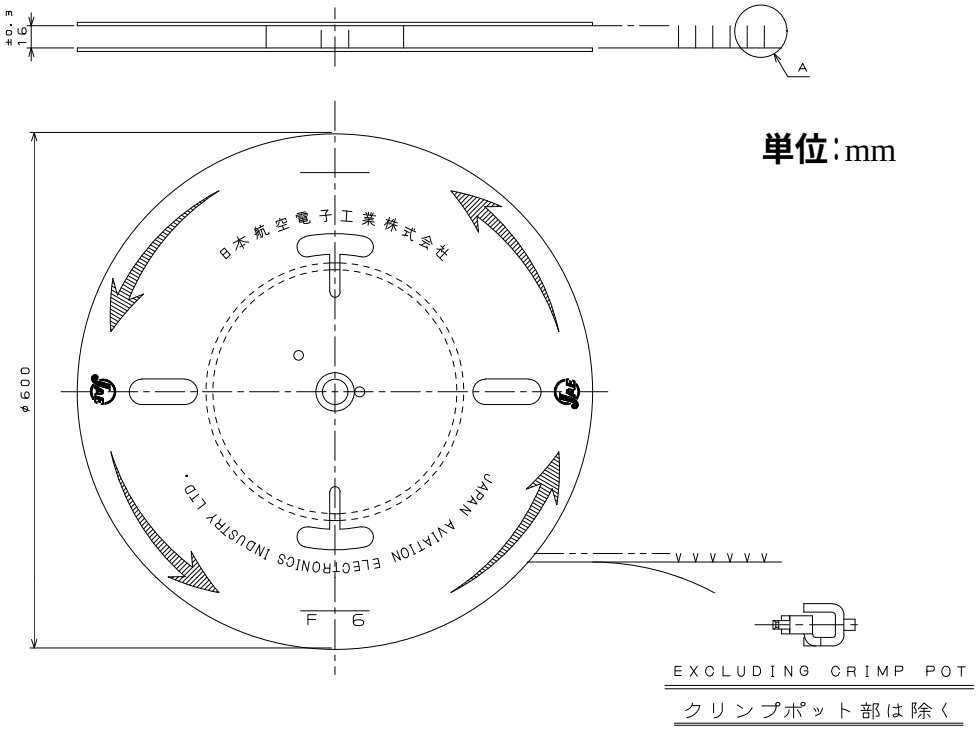

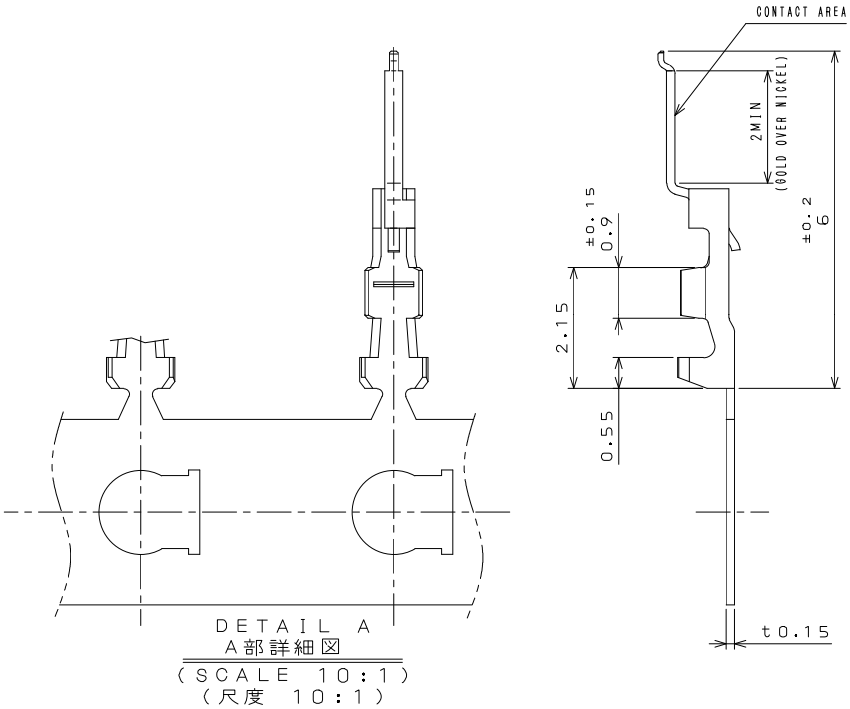

JAE PMK Div. Proprietary. Copyright © 2013, Japan Aviation Electronics Industry, Ltd.

品 名 構 成

圧着ﾊｳｼﾞﾝｸﾞ用下段ｺﾝﾀｸﾄ(SJ103061)



命名法

FI-R C3 – 1B – 1E – 15000

- FI-R：ｼﾘｰｽﾞ名
- C3：圧着ﾊｳｼﾞﾝｸﾞ用ｺﾝﾀｸﾄ
- 1B：下段ｺﾝﾀｸﾄ
- 1E：ﾓﾃﾞｨﾌｨｹｰｼｮﾝｺｰﾄﾞ **B3**
- 15000：ﾏｶﾞｼﾞﾝｱｾﾝﾌﾞﾘ15000本/ﾘｰﾙ

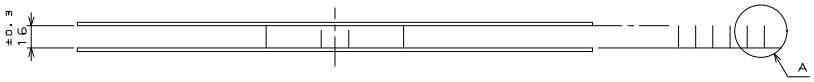

単位：mm

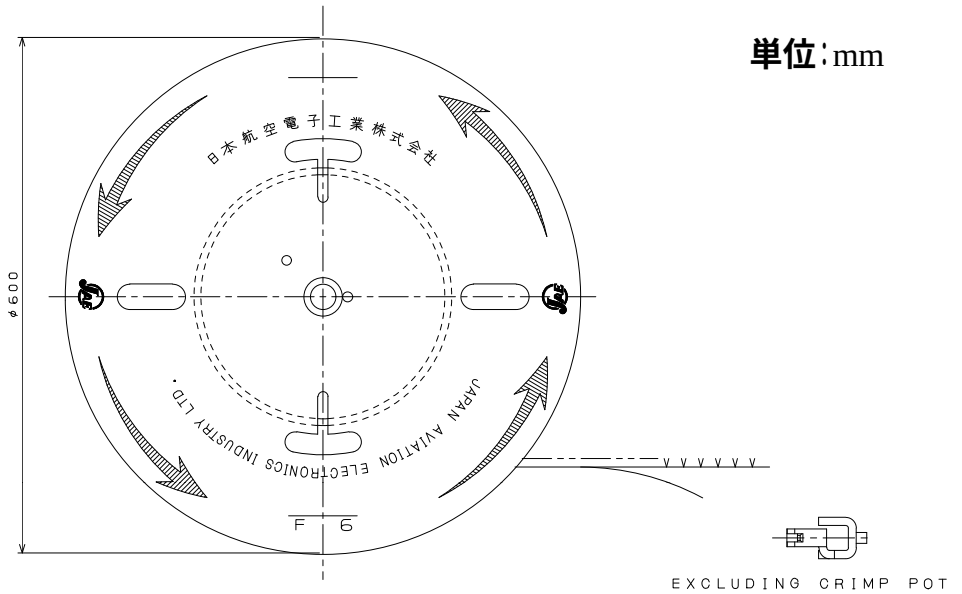

EXCLUDING CRIMP POT
クリンプポット部は除く

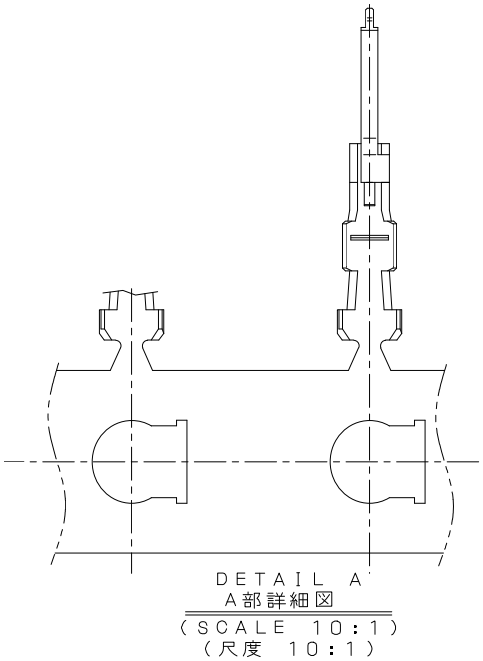

DETAIL A
A部詳細図
（SCALE 10：1）
（尺度 10：1）

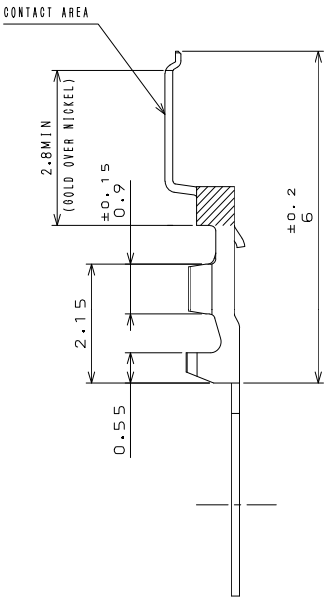

JAE PMK Div. Proprietary. Copyright © 2013, Japan Aviation Electronics Industry, Ltd.

品 名 構 成

半田付けﾒｶﾆｶﾙﾛｯｸ及びShellﾀｲﾌﾟ(SJ104311)

命名法

FI-R E ** C L

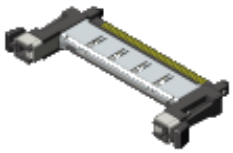

- FI-R：ｼﾘｰｽﾞ名
- E：ｼｪﾙﾀｲﾌﾟ
- **極数**：21,31,41,51芯
- C：ｹｰﾌﾞﾙ側半田付けﾀｲﾌﾟ **C1**
- L　：ﾒｶﾆｶﾙﾛｯｸあり

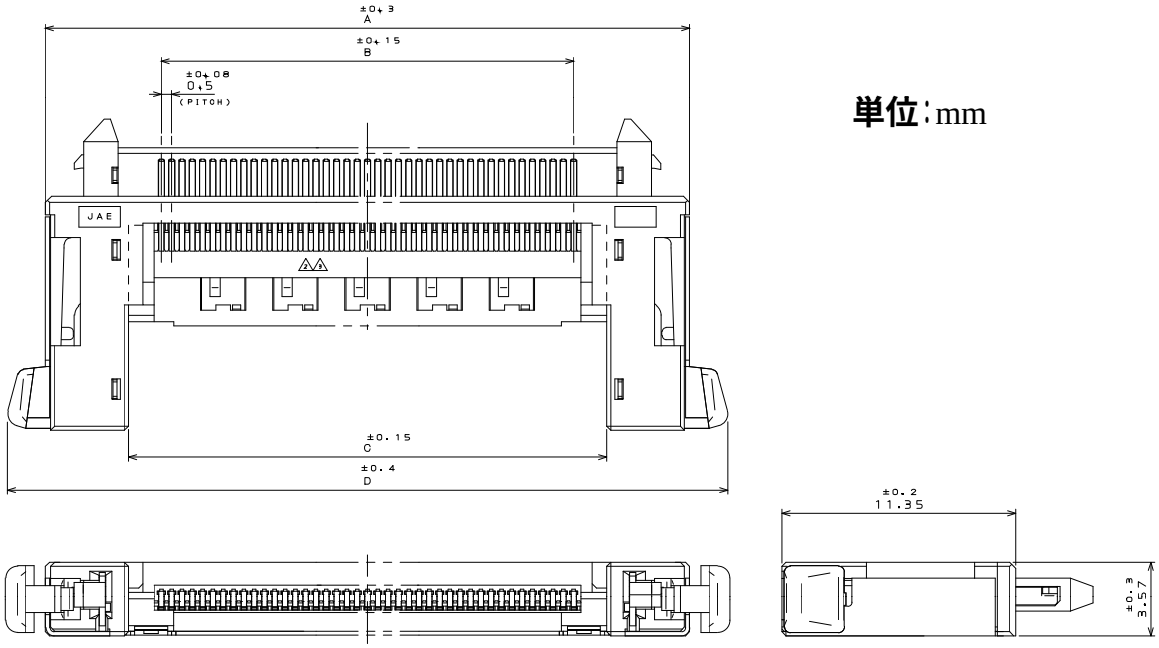

単位：mm

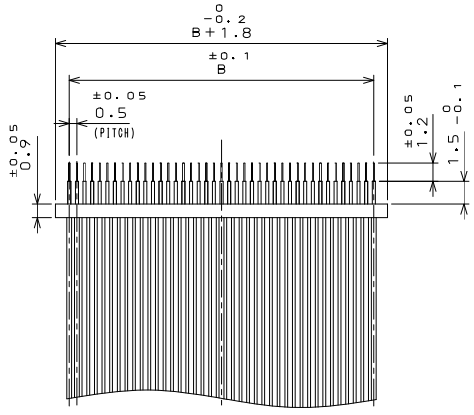

ｹｰﾌﾞﾙ結線状態図(参考)

寸法表

DIMENSION / NO.OF CONTACTS(N)	A	B	C	D
21	21.25	10.0	13.2	24.95
31	26.25	15.0	18.2	29.95
41	31.25	20.0	23.2	34.95
51	36.25	25.0	28.2	39.95

JAE PMK Div. Proprietary. Copyright © 2013, Japan Aviation Electronics Industry, Ltd.

品 名 構 成

半田付けﾀｲﾌﾟ用ｶﾊﾞｰｼｪﾙ (SJ104716)

命名法

FI-R E ** C L - SH2 - 3000

- FI-R：ｼﾘｰｽﾞ名
- E：E:ｼｪﾙﾀｲﾌﾟ
- **：極数：21,31,41,51芯
- C：ｹｰﾌﾞﾙ側半田付けﾀｲﾌﾟ
- L：L :ﾒｶﾆｶﾙﾛｯｸあり
- SH2：ｶﾊﾞｰｼｪﾙ
- 3000：エンボス3000個巻

C2



単位：mm

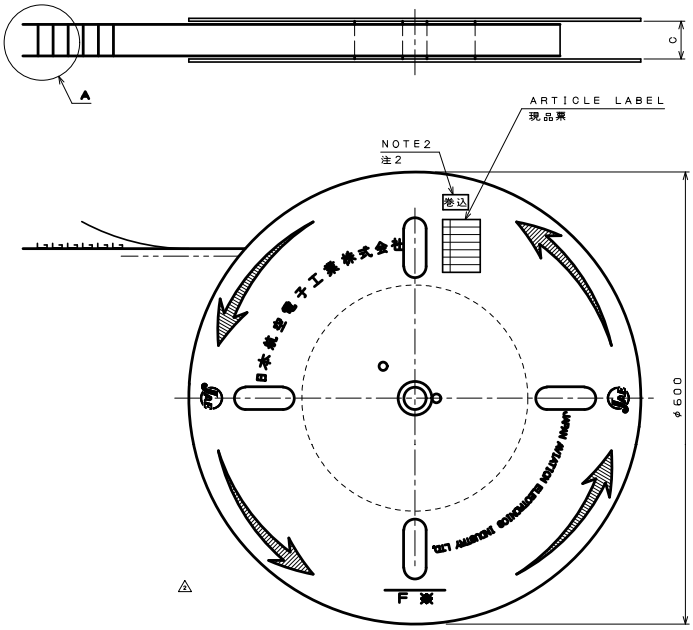

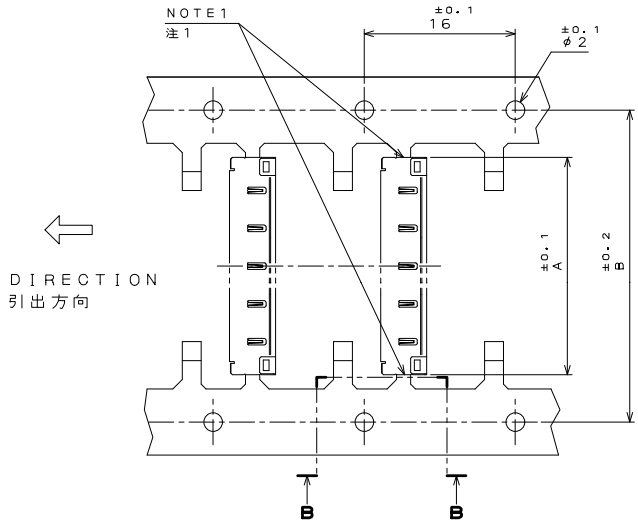

寸法表

NO.OF CONTACT 芯数	A	B	C
21	13.0	19.0	26.0
31	18.0	28.0	40.0
41	23.0	35.0	50.0
51	28.0	34.0	40.0

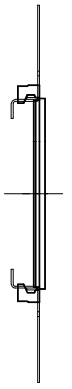

DETAIL A
A部詳細図
(SCALE 2:1)
(尺度 2:1)

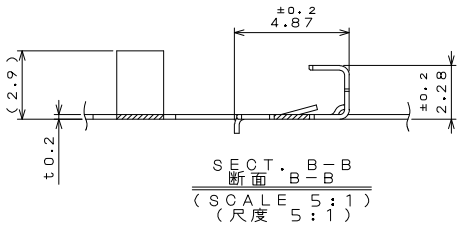

SECT. B-B
断面 B-B
(SCALE 5:1)
(尺度 5:1)

JAE PMK Div. Proprietary. Copyright © 2013, Japan Aviation Electronics Industry, Ltd.

製品ﾊﾞﾘｴｰｼｮﾝ

【基板側】



芯数	実装方向	品名	ﾘｰﾙ品名
21	ﾗｲﾄｱﾝｸﾞﾙ	FI-RE21S-HF	FI-RE21S-HF-R1500
	ｽﾄﾚｰﾄ	FI-RE21S-VF	FI-RE21S-VF-R1300
31	ﾗｲﾄｱﾝｸﾞﾙ	FI-RE31S-HF	FI-RE31S-HF-R1500
	ｽﾄﾚｰﾄ	FI-RE31S-VF	FI-RE31S-VF-R1300
41	ﾗｲﾄｱﾝｸﾞﾙ	FI-RE41S-HF	FI-RE41S-HF-R1500
	ｽﾄﾚｰﾄ	FI-RE41S-VF	FI-RE41S-VF-R1300
51	ﾗｲﾄｱﾝｸﾞﾙ	FI-RE51S-HF	FI-RE51S-HF-R1500
	ｽﾄﾚｰﾄ	FI-RE51S-VF	FI-RE51S-VF-R1300

【ｹｰﾌﾞﾙ側圧着ﾀｲﾌﾟ】



芯数	ﾀｲﾌﾟ	ﾒｶﾆｶﾙﾛｯｸ	品名
21	ｼｪﾙ	有	FI-RE21HL
31	ｼｪﾙ	有	FI-RE31HL
41	ｼｪﾙ	有	FI-RE41HL
51	ｼｪﾙ	有	FI-RE51HL

【ｹｰﾌﾞﾙ側半田付けﾀｲﾌﾟ】

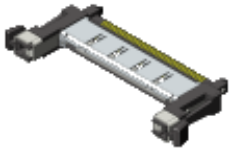

芯数	ﾀｲﾌﾟ	ﾒｶﾆｶﾙﾛｯｸ	品名	ｶﾊﾞｰｼｪﾙ品名
21	ｼｪﾙ	有	FI-RE21CL	FI-RE21CL-SH2-3000
31			FI-RE31CL	FI-RE31CL-SH2-3000
41			FI-RE41CL	FI-RE41CL-SH2-3000
51			FI-RE51CL	FI-RE51CL-SH2-3000

JAE PMK Div. Proprietary. Copyright © 2013, Japan Aviation Electronics Industry, Ltd.

関連資料番号

・ｺﾝﾀｸﾄ圧着治具（手動）	品名：CT150-4C-FIR 取り扱い説明書：T700276
・ｺﾝﾀｸﾄ圧着治具（半自動機） ﾌﾟﾚｽ機	品名：CP215-4B 取り扱い説明書：T707064
ｱﾌﾟﾘｹｰﾀ	品名：350-FI-2B 取り扱い説明書：T703263

ご注文に際してのお願い

①本カタログに記載の仕様は、参考値です。製品及び仕様については、予告無く変更する場合があります。
記載製品のご採用のご検討やご注文に際しては、予め弊社販売窓口までお問い合わせのうえ、「納入仕様書」の取交わしをお願いします。

②お客様におかれましては、保護回路や冗長回路等を設けて機器の安全を図られると共に、弊社製品の適合性について十分なご確認をお願いします。

③本カタログ記載の製品は、下記の推奨用途に使用されることを意図しております。従いまして、推奨用途以外へのご使用又は極めて高い信頼性が要求される特定用途へのご使用をお考えの場合は、必ず事前に弊社販売窓口までご相談下さいますようお願い申し上げます。

⑴ **ご相談いただく用途例**

（イ）下記用途でお客様指定又は産業分野固有の品質保証プログラムが有る場合は、ご相談下さい。

*__用途例__：自動車電装、列車制御、通信機器（幹線）、交通信号制御、電力、燃焼制御、防火・防犯装置、防災機器、等。

（ロ）下記特定用途へのご使用をお考えの場合は、お客様指定の品質保証プログラムにて別途承る場合が有ります。

*__特定用途例__：航空宇宙機器、海底中継機器、原子力制御システム、生命維持のための医療機器、等。

⑵ **推奨用途例**：電算機、事務機、通信機器（端末、移動体）、計測機器、AV機器、家電、FA機器、等。

日本航空電子工業株式会社

プロダクトマーケティング本部
〒153-8539　東京都目黒区青葉台 3-1-19（青葉台ビル）
TEL：03-3780-2882　FAX：03-3780-2946

■ご注意

電気用品安全法の適合品をお求めの場合は、電気用品安全法で定める基準を満たした認証品をお選びください。認証品については弊社販売窓口までお問い合わせください。

※　改良の為、予告なく形状・仕様等変更することが有ります。ご検討の際はお問合せ下さい。

JAE PMK Div. Proprietary. Copyright © 2013, Japan Aviation Electronics Industry, Ltd.

図面番号(DRAWING NO.)
SJ103060

版数 REV.	年月日 DATE	DCN NO.	変更内容 DESCRIPTION	製図 DR.	担当 CHK.	査閲 APPD.	承認 APPD.

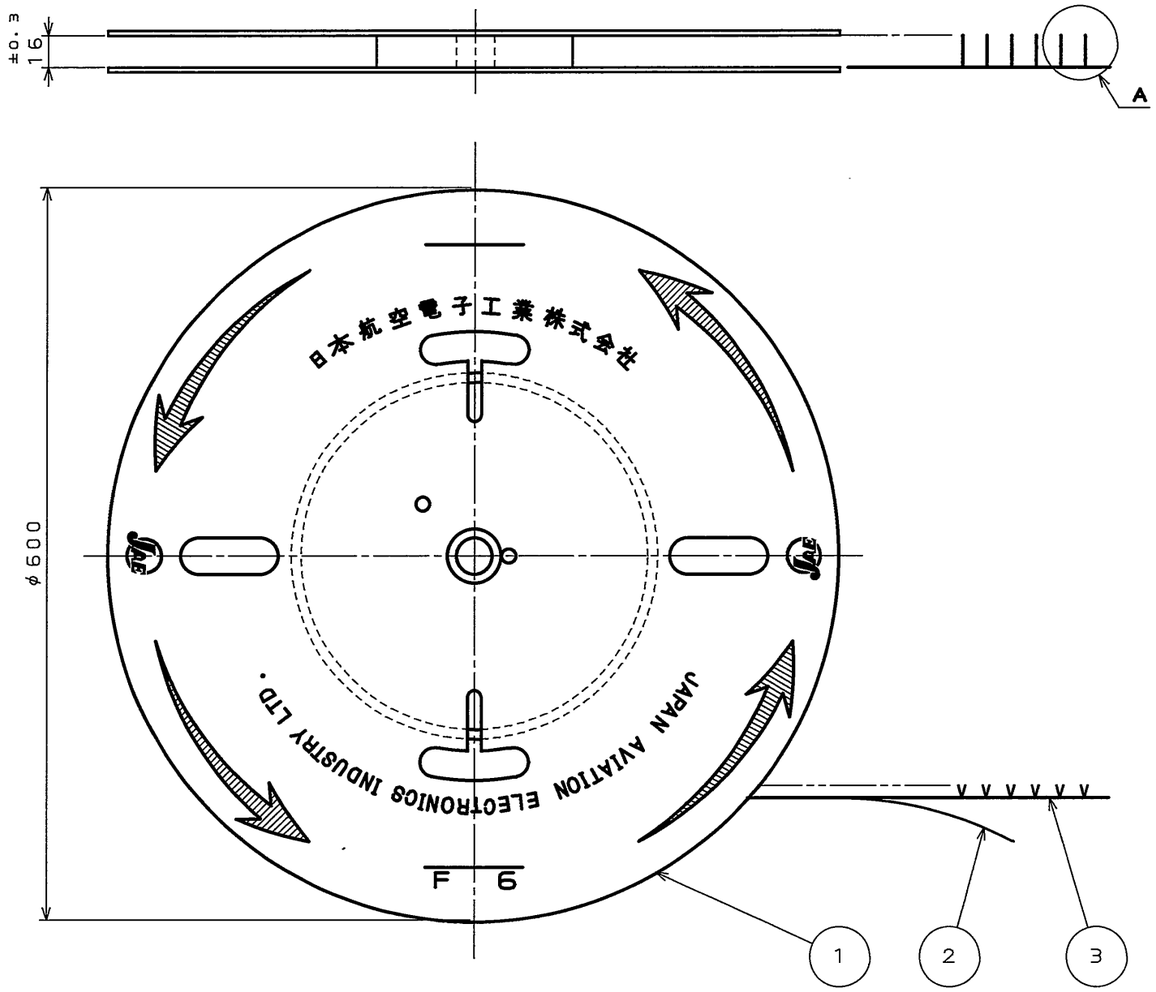

EXCLUDING CRIMP POT
クリンプポット部は除く

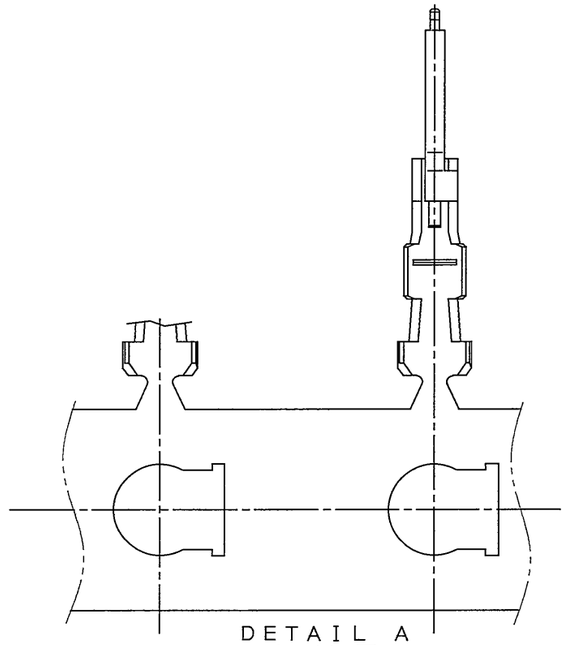

DETAIL A
A部詳細図
(SCALE 10:1)
(尺度 10:1)

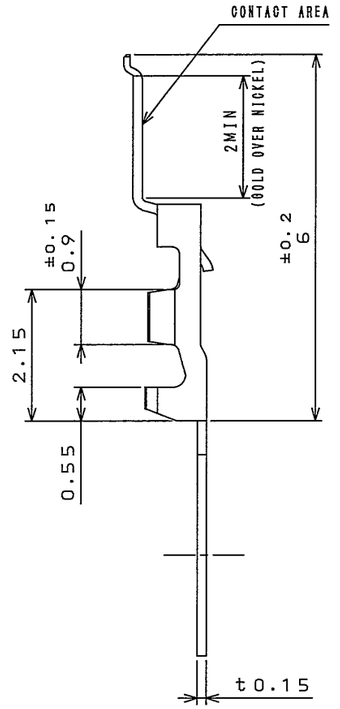

符号 NO.	名称 DESCRIPTION	個数 QTY.	材料 MATERIAL	仕上 FINISH	備考 REMARKS
3	CONTACT コンタクト	15000	PHOSPHOR BRONZE リン青銅	CONTACT AREA :GOLD(0.1μm MIN) OVER NICKEL NI上Auメッキ(0.1μm以上)	CRIMP AREA:TIN PLATING Snメッキ
2	PAPER TAPE 紙リール	1	PAPER 紙	———	———
1	MAGAZINE マガジン	1	PAPER 紙	———	———

NOTE1. APPLICABLE WIRE: #30～#36 AWG. STANDERD.
2. INSULATION OUTER DIA. φ0.75～0.27mm
3. USE THE APPLICATOR MADE BY JAE.

注1．使用電線は，AWG#30～#36の撚線とする。
2．被覆外径はφ0.75～0.27mmとする。
3．アプリケータはＪＡＥオリジナルを使用とする。

仕様書(SPECIFICATION)	第1版(ORIGINAL DATE) 14.Mar.2005	尺度(SCALE) ———	シリーズ(SERIES) FI-R
一般公差(GENERAL TOLERANCE) 寸法(DIMENSION) ・ ±0.8 ・X ±0.4 ・XX ±0.1 ・XXX± 角度(ANGLES) X° ± X°X'±	製図 DR.	名称(TITLE) FI-RC3-1A-1E -15000 MAGAZINE ASSEMBLY	日本航空電子工業株式会社 JAPAN AVIATION ELECTRONICS INDUSTRY, LTD.
	担当 CHK. K.HISAMATSU		
	査閲 APPD. M. Suzuki		
	承認 APPD. K. Hisatomi	質量(MASS)	図面番号(DRAWING NO.) SJ103060
			版数(REV.) 1

SIZE A3

JAE-CONNECTOR.COM
Reference Only

DOF-0-212E(03.08)

JAE CONNECTOR DIV. PROPRIETARY.
COPYRIGHT (C) 2005, JAPAN AVIATION ELECTRONICS INDUSTRY, LTD.

図面番号(DRAWING NO.)
SJ103061

版数 REV.	年月日 DATE	DCN NO.	変更内容 DESCRIPTION	製図 DR.	担当 CHK.	査閲 APPD.	承認 APPD.

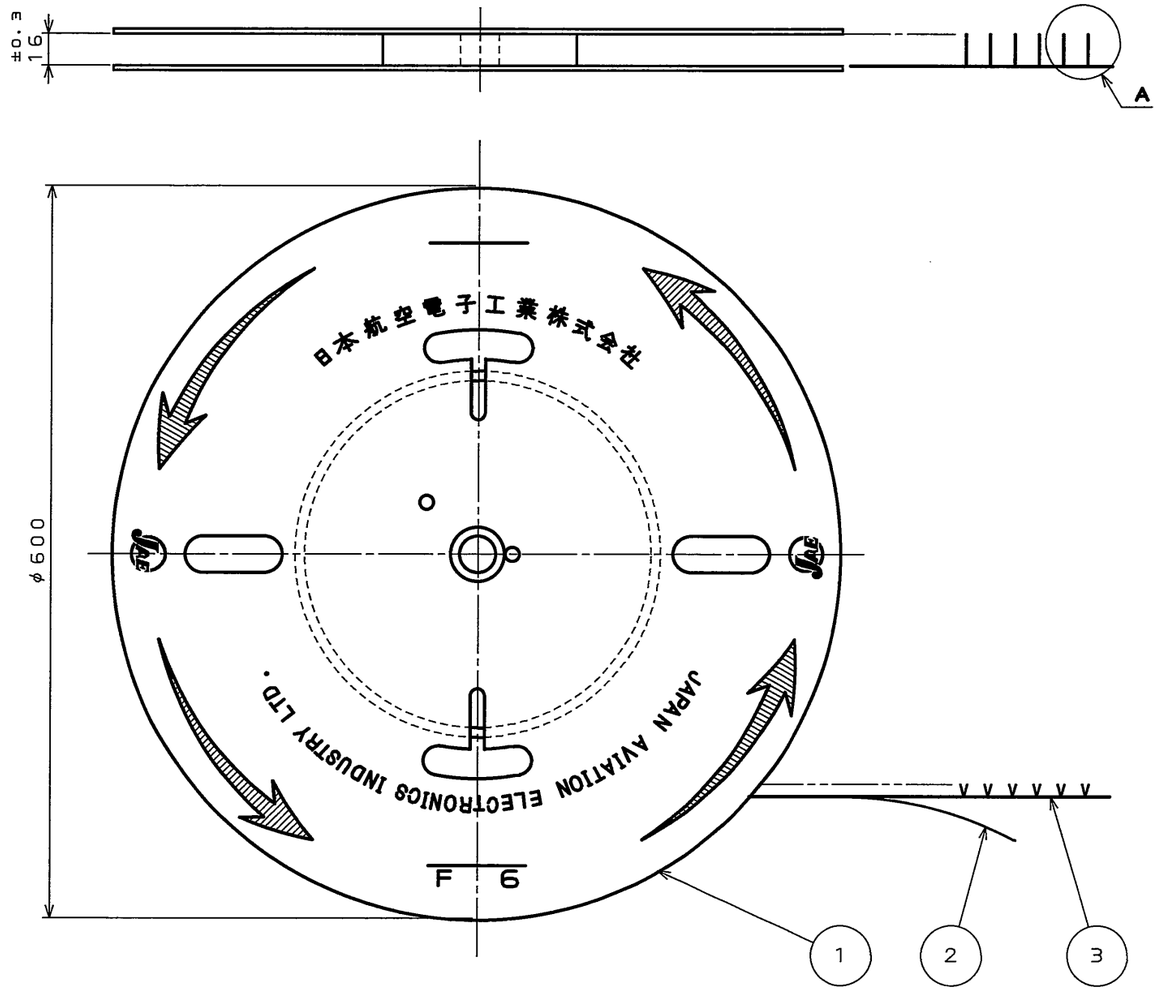

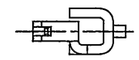

EXCLUDING CRIMP POT

クリンプポット部は除く

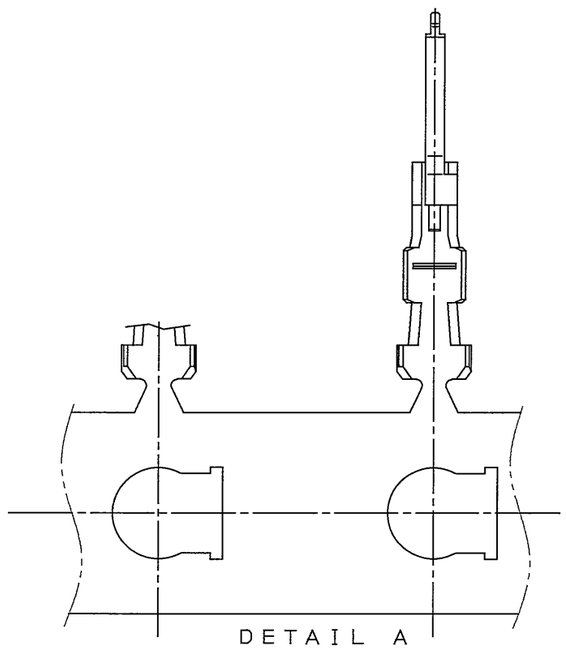

DETAIL A

A部詳細図

(SCALE 10:1)

(尺度 10:1)

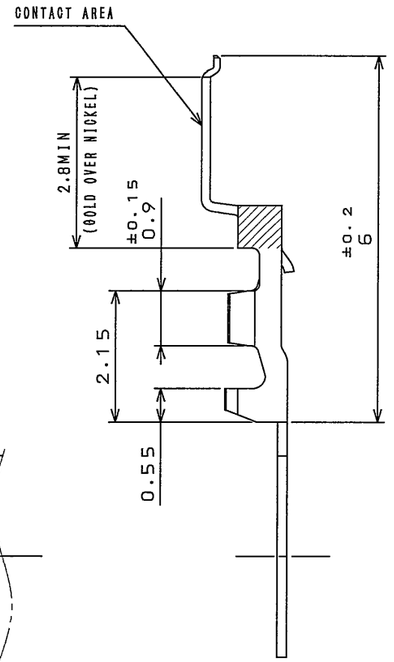

符号 NO.	名称 DESCRIPTION	個数 QTY.	材料 MATERIAL	仕上 FINISH	備考 REMARKS
3	CONTACT コンタクト	15000	PHOSPHOR BRONZE リン青銅	CONTACT AREA :GOLD(0.1μm MIN) OVER NICKEL Ni上Auメッキ(0.1μm以上)	CRIMP AREA:TIN PLATING Snメッキ
2	PAPER TAPE 紙リール	1	PAPER 紙	———	———
1	MAGAZINE マガジン	1	PAPER 紙	———	———

NOTE1. APPLICABLE WIRE: #30～#36 AWG. STANDERD.
2. INSULATION OUTER DIA. φ0.75～0.27mm
3. USE THE APPLICATOR MADE BY JAE.

注1．使用電線は，AWG#30～#36の撚線とする。
2．被覆外径はφ0.75～0.27mmとする。
3．アプリケータはＪＡＥオリジナルを使用とする。

JAE-CONNECTOR.COM
Reference Only

仕様書(SPECIFICATION)		第1版(ORIGINAL DATE) 14.Mar.2005	尺度(SCALE) ———
		製図 DR.	シリーズ(SERIES) FI-R
一般公差(GENERAL TOLERANCE)		担当 CHK. K.HISAMATSU	名称(TITLE) FI-RC3-1B-1E -15000 MAGAZINE ASSEMBLY
寸法(DIMENSION)	角度(ANGLES)	査閲 APPD. M.Suzuki	
. ±0.8	X° ±	承認 APPD. K.Hisatomi	
.X ±0.4	X°X' ±		質量(MASS)
.XX ±0.1			
.XXX±			

日本航空電子工業株式会社
JAPAN AVIATION ELECTRONICS INDUSTRY, LTD.

図面番号(DRAWING NO.) SJ103061

版数(REV.) 1

SIZE A3

DOF-0-212E(03.08)

JAE CONNECTOR DIV. PROPRIETARY.
COPYRIGHT (C) 2005, JAPAN AVIATION ELECTRONICS INDUSTRY, LTD.

東莞市廣蒲電子有限公司

SPECIFCATION	UL20276 30AWG/10P+30AWG/10C+AL/MY+BRAID+JACKET		
ITEM		**SPECIFCATION**	
CONDUCTOR	AWG	30AWG/10P	30AWG/10C
	MATERIAL	TINNED COPPER	TINNED COPPER
	COND.SIZE	7/0.10mm	7/0.10mm
INSULATION	AVG.THICK	0.14mm	0.14mm
	MATERIAL	PP+HD-PE	PP+HD-PE
	OD	0.58±0.05mm	0.58±0.05mm
SHIELD	MATERIAL	AL/MY (Face Outside)	
	COVERAGE	100%	
	OVERLAP	25%	
BRAID	MATERIAL	TINNED COPPER	
	COND.SIZE	16/10/0.10mm	
	COVERAGE	90%	
JACKET	AVG.THICK	0.50mm	
	MATERIAL	80℃ 70P PVC	
	COLOR	BLACK/HALF MATT (CUL01001)	
	OD	5.90±0.15mm	

30AWG/10P芯线对绞绞距为5～6mm

芯线材质为PP+HD-PE,比例为：30%PP+70%HD-PE

CROSS SECTION

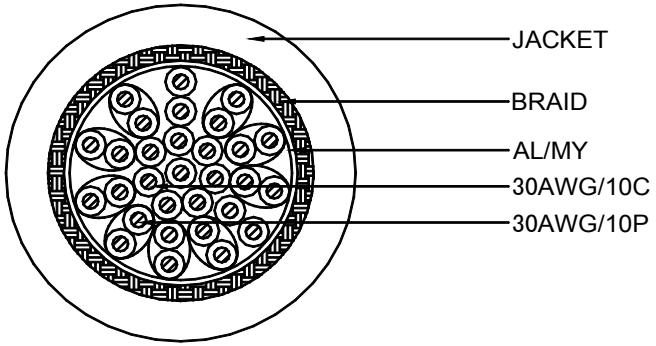

COLOR CODE

30AWG/10P:

1.BLACK-BLACK/WHITE 2.BROWN-BROWN/WHITE 3.RED-RED/WHITE
4.ORANGE-ORANGE/WHITE 5.YELLOW-YELLOW/WHITE 6.GREEN-GREEN/WHITE
7.BLUE-BLUE/WHITE 8.PURPLE-PURPLE/WHITE 9.GRAY-GRAY/WHITE 10.PINK-PINK/WHITE

30AWG/10C:

1.BLACK 2.BROWN 3.RED 4.ORANGE 5.YELLOWN 6.GREEN
7.BLUE 8.PURPLE 9.GRAY 10.WHITE

MARKING

E238846 AWM 20276 80℃ 30V VW-1
CHINGLUNG

PRINTING COLOR		WHITE	
APPROVED		CUSTOMER	稳德
CHECKED		REV	0994-30001-B
DRAWING	王应祥	DATE	8-Sep-15

ELECTRICAL CHARACTERISTICS

1.Rating: TEMP 80℃ Rating voltage:30V
2.Conductor Resistance: AT 20℃ MAX
30AWG:376.96Ω/KM
3.Impedance:100±10Ω

PHYSICAL PROPERTIES

TEL: 0769-83665661 83665662 FAX: 83665663

标准型(S-901)热缩套管尺寸检验标准

产品规格	收缩前尺寸(mm)		完全收缩后尺寸(mm)		包装长度 M
	内径(D)	壁厚(T)	内径(D)	壁厚(T)	
Φ0.8	0.9±0.2	0.15±0.08	≤0.4	0.30±0.06	400±2
Φ1.0	1.5±0.2	0.15±0.08	≤0.6	0.36±0.06	400±2
Φ1.5	2.0±0.2	0.18±0.08	≤0.8	0.40±0.08	400±2
Φ2.0	2.5±0.2	0.18±0.08	≤1.00	0.42±0.08	400±2
Φ2.5	3.0±0.2	0.18±0.08	≤1.25	0.42±0.08	400±2
Φ3.0	3.5±0.3	0.22±0.10	≤1.5	0.46±0.08	400±2
Φ3.5	4.0±0.3	0.25±0.10	≤1.75	0.46±0.08	400±2
Φ4.0	4.5±0.3	0.25±0.10	≤2.0	0.48±0.08	400±2
Φ4.5	5.0±0.3	0.25±0.10	≤2.25	0.50±0.10	400±1
Φ5.0	5.5±0.4	0.25±0.10	≤2.5	0.50±0.10	200±1
Φ6.0	6.5±0.4	0.28±0.12	≤3.0	0.56±0.10	200±1
Φ6.5	7.0±0.4	0.28±0.12	≤3.25	0.56±0.10	200±1
Φ7.0	7.5±0.4	0.28±0.12	≤3.5	0.58±0.10	100±1
Φ8.0	8.5±0.5	0.28±0.12	≤4.0	0.60±0.10	100±1
Φ9.0	9.5±0.5	0.30±0.12	≤4.5	0.60±0.10	100±1
Φ10	10.5±0.5	0.30±0.12	≤5.0	0.60±0.10	100±1
Φ11	11.5±0.5	0.30±0.12	≤5.5	0.60±0.10	100±1
Φ12	12.5±0.5	0.30±0.12	≤6.0	0.60±0.10	100±1
Φ13	13.5±0.5	0.35±0.12	≤6.5	0.65±0.12	100±1
Φ14	14.5±0.5	0.35±0.12	≤7.0	0.65±0.12	100±1
Φ15	15.5±0.5	0.40±0.12	≤7.5	0.65±0.12	100±1
Φ16	16.5±0.5	0.36±0.12	≤8.0	0.65±0.12	50±0.5
Φ17	17.5±0.5	0.36±0.12	≤8.5	0.65±0.12	50±0.5
Φ18	18.7±0.6	0.40±0.15	≤9.0	0.70±0.12	50±0.5
Φ20	20.6±0.6	0.40±0.15	≤10.0	0.75±0.15	50±0.5
Φ22	22.7±0.6	0.40±0.15	≤11.0	0.80±0.15	50±0.5
Φ25	25.5±0.7	0.40±0.15	≤12.5	0.90±0.15	50±0.5
Φ28	29.0±0.7	0.45±0.20	≤14.0	0.95±0.15	50±0.5
Φ30	31.0±0.7	0.45±0.20	≤15.0	0.95±0.15	50±0.5
Φ35	36.0±1.0	0.50±0.22	≤17.5	1.00±0.20	50±0.5
Φ40	41.0±1.0	0.55±0.25	≤20.0	1.10±0.25	50±0.5
Φ45	46.0±1.0	0.55±0.25	≤22.5	1.10±0.25	50±0.5
Φ50	51.5±1.5	0.60±0.25	≤26.0	1.20±0.25	50±0.5
Φ55	≥55	0.60±0.25	≤28.0	1.20±0.25	50±0.5
Φ60	≥60	0.60±0.25	≤30.0	1.20±0.25	50±0.5
Φ70	≥70	0.70±0.30	≤35.0	1.45±0.25	50±0.5
Φ80	≥80	0.70±0.30	≤40.0	1.45±0.25	50±0.5
Φ95	≥95	0.70±0.30	≤45.0	1.45±0.25	50±0.5
Φ100	≥100	0.70±0.30	≤50.0	1.45±0.25	50±0.5

附产品图示:

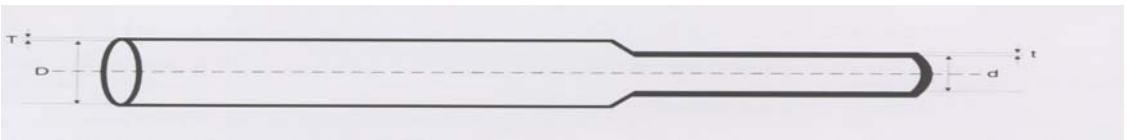

薄壁型(S-901A)热缩套管尺寸检验标准

产品规格	收缩前尺寸(mm)		完全收缩后尺寸(mm)		包装长度 M
	内径(D)	壁厚(T)	内径(D)	壁厚(T)	
Φ0.5	0.7±0.2	0.09±0.05	≤0.4	0.22±0.06	400±2
Φ0.6	0.8±0.2	0.12±0.05	≤0.4	0.22±0.06	400±2
Φ0.8	0.9±0.2	0.12±0.05	≤0.4	0.25±0.06	400±2
Φ1.0	1.5±0.2	0.10±0.05	≤0.6	0.25±0.06	400±2
Φ1.5	2.0±0.2	0.10±0.05	≤0.8	0.25±0.06	400±2
Φ2.0	2.5±0.2	0.13±0.06	≤1.00	0.28±0.06	400±2
Φ2.5	3.0±0.2	0.15±0.06	≤1.25	0.28±0.06	400±2
Φ3.0	3.5±0.3	0.15±0.06	≤1.5	0.30±0.06	400±2
Φ3.5	4.0±0.3	0.15±0.06	≤1.75	0.30±0.06	400±2
Φ4.0	4.5±0.3	0.15±0.06	≤2.0	0.30±0.06	400±2
Φ4.5	5.0±0.3	0.15±0.06	≤2.25	0.30±0.06	400±1
Φ5.0	5.5±0.4	0.15±0.06	≤2.5	0.30±0.06	200±1
Φ6.0	6.5±0.4	0.15±0.06	≤3.0	0.30±0.06	200±1
Φ7.0	7.5±0.4	0.18±0.08	≤3.5	0.36±0.08	200±1
Φ8.0	8.5±0.5	0.18±0.08	≤4.0	0.36±0.08	200±1
Φ9.0	9.5±0.5	0.18±0.08	≤4.5	0.36±0.08	200±1
Φ10	10.5±0.5	0.18±0.08	≤5.0	0.36±0.08	200±1
Φ11	11.5±0.5	0.18±0.08	≤5.5	0.36±0.08	200±1
Φ12	12.5±0.5	0.18±0.08	≤6.0	0.36±0.08	100±1
Φ13	13.5±0.5	0.20±0.08	≤6.5	0.40±0.10	100±1
Φ14	14.5±0.5	0.20±0.08	≤7.0	0.40±0.10	100±1
Φ15	15.5±0.5	0.20±0.08	≤7.5	0.40±0.10	100±1

附产品图示:

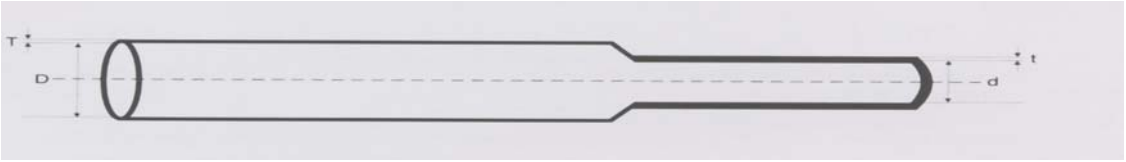

说明：我公司生产的热缩套管**产品铅、镉、汞、六价铬、PBB、PBDE等环境管理物质含量**符合欧盟 **RoHS** 指令和 **SONY SS-00259** 环境技术标准，其中黑色热缩套管是无卤环保产品。

UL 热缩套管性能特性表

阻燃、柔软、绝缘、低温收缩
收缩比率：2：1
纵向收缩率：≤5%
最低收缩温度：90℃
连续使用温度：-55℃~125℃

性能 Properties

性能 Properties	测试条件 Condition	指标 Value
物理性能：抗张强度 Physical: Tensile strength		≥10.4Mpa
断裂伸长率 Elongation		≥200%
老化后抗张强度 Tensile strength afrer aging	158±1℃,168hr	不小于老化前的 70% ≥70% of original
老化后断裂伸长率 Elongation after aging		≥100%
热冲击 Heat shock	250℃,1hr	无裂纹 No cracking
冷弯曲 Cold bend	-30℃,1hr	无裂纹 No cracking
电性能： 绝缘耐压 Electrical: DielectricVoltage withstan	60sec	≥2500V
体积电阻率 Volume resistivity		≥10^{14} Ω·cm
化学性能：铜腐蚀 Corrosion	158±1℃,168hr	Pass
Chemical: 铜稳定性 Copper stability	158±1℃,168hr	伸长率≥100%
阻燃性 Flammability	VW-1	Pass
电压等级 Voltage rating	600V/300V	
温度等级 Temperature rating	125℃	

材 质 说 明

我司热缩环保热缩套管是一种阻燃型的热收缩套管，组成材料为聚烯烃材料附加适量助剂，具体组成如下，

产品铅、镉、汞、六价铬、PBB、PBDE 等环境管理物质含量符合 SONY 及欧盟 RoHS 法令环保要求。

原料名称			使用目的	含量	CAS No.
中文	ENGLISH	分子式			
乙烯醋酸乙烯酯	EVA	（CH_2-CH_2）m -(CH_2-CH-$COOCH_3$)n	主剂	50%	24937-78-7
氢氧化镁	ATH	$Mg(OH)_2$	阻燃剂	40%	1309-42-8
磷系阻燃剂	MP	$P_mN_nH_xO_y$	阻燃剂	6%	7723-14-0
色母	pigment	色粉+EVA+填充剂	着色剂	4%	

UL 1571 HOOK-UP WIRE
80℃ 30V PVC 電子線

UL Subject 758

UL FILE NO：E309338

▲說明：

- 導體使用單條或絞線最少至 50AWG 裸銅或鍍錫銅
- PVC 絕緣
- 額定溫度：80℃，額定電壓：30 Volts
- 使用標準厚度,易剝,截斷容易
- 可通過 UL 垂直型耐燃測試

Product Description:

- Tinned,annealed,stranded or Solid copper conductor,MIN,50AWG
- Color-coded PVC insulation
- Rated temperature: 80℃,Rated voltage: 30 Volts
- Uniform thickness of wire to ensure easy stripping and cutting
- Passed UL VW-1 vertical flame test

▲ 應用：

- 電子設備二次回路中內部連接用線。

Applications:

- Internal wiring of class 2circuits electronic epuipment

構造和電氣性能

Structure & electric properties



UL 1571	額 定 Range		導 體 Conducor		絕 緣 體 Insulation		公差值 Tolerance mm	最大導體阻抗 Maximum Conductor Resistance Ω/km	最小絕緣阻抗 Minimum Insulation Resistance Ω/km	絕緣耐電壓 (VAC/min) Insulation Potential Strength
	溫度 Temp °C	電壓 Voltage V	線號 AWG	構成 No./mm	厚度 Thickness mm	外徑 O.D. mm				
多股芯線 Stranded	80°C	30V	28	7/0.127	0.10	0.60	±0.05	248	15	500

UL 1571 HOOK-UP WIRE
80℃ 30V PVC 電子線

Z D

UL Subject 758

UL FILE NO：E309338

STYLE			UL 1571		CSA
RATING TEMP / VOLT			80℃/30V		
CONDUCTOR	SIZE		AWG	28	
	NUMBER		NO.	7	
	DIAMETER		MM	0.127	
	MIN.DIAMETER		MM	0.120	
	CROSS SEC AREA OF COND	AVG.	CM	253	
		MIN		248	
	LAY OF BUNCH		INCH	0.50	
	MAX.RESISTANCE		Ω/KM	248	
INSULATION	O.D.(±0.05)		MM	0.60	
	INSULATION THICKNESS	AVG	MIL	4	
		MIN		3	
	JACKET THICKNESS	AVG	MIL		
		MI			
ADHESIVE TEST			KG		
INSULATION RESISTANCE			MΩ/KM	15	
SPARK TEST			KV	2	
ELONGATION			%	100	
TENSIL STRENGTH			PSI	1500	
ELO.(AFTER AGING)			%	OF UNAGED 65	
TEN.ST.(AFTER AGING)			%	OF UNAGED 70	
AGING TEMP TIME				113℃/168HRS	
OIL LMMERSION TEST					
FIAME TEST				VW-1	
HEAT SHOCK TEST				121℃/1HR 1.60MM MANDREL	
DEFORMATION TEST				113℃/1HR 50%	
COLD BEND TEST				-10℃/1HR 0.4MM MANDREL	
INSULATION POTENTIALST				500VAC/MIN	

印 字 內 容： 不印字

检测报告
Test Report

****

结论 Conclusion

测试样品 Tested Sample	依据标准/指令 According to standard/directive	结果 Result
提交样品 Submitted Sample	欧盟RoHS指令2011/65/EU及其修订指令(EU) 2015/863 RoHS Directive 2011/65/EU with amendment (EU) 2015/863	符合 PASS

****

符合表示检测结果满足欧盟RoHS指令2011/65/EU及其修订指令(EU) 2015/863要求的限值。
PASS means that the results shown on the report comply with the limits set by RoHS Directive 2011/65/EU with amendment (EU) 2015/863.

检测报告
Test Report

检测依据 Test Method

测试项目 Test Item(s)	测试方法 Test Method	测试仪器 Measured Equipment(s)
铅 Lead (Pb)	IEC 62321-5:2013	ICP-OES
镉 Cadmium (Cd)	IEC 62321-5:2013	ICP-OES
汞 Mercury (Hg)	IEC 62321-4:2013+AMD1:2017 CSV	ICP-OES
六价铬 Hexavalent Chromium (Cr(VI))	IEC 62321-7-2:2017和/或IEC 62321-5:2013测试总铬含量 IEC 62321-7-2:2017 and/or determination of Total Chromium by IEC 62321-5:2013	UV-Vis/ICP-OES
多溴联苯 Polybrominated Biphenyls (PBBs)	IEC 62321-6:2015	GC-MS
多溴二苯醚 Polybrominated Diphenyl Ethers (PBDEs)	IEC 62321-6:2015	GC-MS
邻苯二甲酸酯 Phthalates (DBP, BBP, DEHP, DIBP)	IEC 62321-8:2017	GC-MS

检测报告
Test Report

检测结果 Test Result(s)

测试项目 Tested Item(s)	结果 Result	方法检出限 MDL	限值 Limit
	001		
铅 Lead (Pb)	N.D.	2 mg/kg	1000 mg/kg
镉 Cadmium (Cd)	N.D.	2 mg/kg	100 mg/kg
汞 Mercury (Hg)	N.D.	2 mg/kg	1000 mg/kg
六价铬 Hexavalent Chromium (Cr(VI))	N.D.	8 mg/kg	1000 mg/kg

测试项目 Tested Item(s)	结果 Result	方法检出限 MDL	限值 Limit
	001		
多溴联苯 Polybrominated Biphenyls (PBBs)			
一溴联苯 Monobromobiphenyl	N.D.	5 mg/kg	1000 mg/kg
二溴联苯 Dibromobiphenyl	N.D.	5 mg/kg	
三溴联苯 Tribromobiphenyl	N.D.	5 mg/kg	
四溴联苯 Tetrabromobiphenyl	N.D.	5 mg/kg	
五溴联苯 Pentabromobiphenyl	N.D.	5 mg/kg	
六溴联苯 Hexabromobiphenyl	N.D.	5 mg/kg	
七溴联苯 Heptabromobiphenyl	N.D.	5 mg/kg	
八溴联苯 Octabromobiphenyl	N.D.	5 mg/kg	
九溴联苯 Nonabromobiphenyl	N.D.	5 mg/kg	
十溴联苯 Decabromobiphenyl	N.D.	5 mg/kg	

测试项目 Tested Item(s)	结果 Result	方法检出限 MDL	限值 Limit
	001		
多溴二苯醚 Polybrominated Diphenyl Ethers (PBDEs)			
一溴二苯醚 Monobromodiphenyl ether	N.D.	5 mg/kg	1000 mg/kg
二溴二苯醚 Dibromodiphenyl ether	N.D.	5 mg/kg	
三溴二苯醚 Tribromodiphenyl ether	N.D.	5 mg/kg	
四溴二苯醚 Tetrabromodiphenyl ether	N.D.	5 mg/kg	
五溴二苯醚 Pentabromodiphenyl ether	N.D.	5 mg/kg	
六溴二苯醚 Hexabromodiphenyl ether	N.D.	5 mg/kg	
七溴二苯醚 Heptabromodiphenyl ether	N.D.	5 mg/kg	
八溴二苯醚 Octabromodiphenyl ether	N.D.	5 mg/kg	
九溴二苯醚 Nonabromodiphenyl ether	N.D.	5 mg/kg	
十溴二苯醚 Decabromodiphenyl ether	N.D.	5 mg/kg	

检测报告
Test Report

检测结果 Test Result(s)

测试项目 Tested Item(s)	结果 Result	方法检出限 MDL	限值 Limit
	001		
邻苯二甲酸酯 Phthalates (DBP, BBP, DEHP, DIBP)			
邻苯二甲酸二丁酯 Dibutyl phthalate (DBP) CAS#:84-74-2	N.D.	50 mg/kg	1000 mg/kg
邻苯二甲酸丁基苄基酯 Butyl benzyl phthalate (BBP) CAS#:85-68-7	N.D.	50 mg/kg	1000 mg/kg
邻苯二甲酸二(2-乙基)己酯 Di-(2-ethylhexyl) phthalate (DEHP) CAS#:117-81-7	N.D.	50 mg/kg	1000 mg/kg
邻苯二甲酸二异丁酯 Diisobutyl phthalate (DIBP) CAS#:84-69-5	N.D.	50 mg/kg	1000 mg/kg

样品/部位描述Sample/Part Description

序号 No.	CTI样品ID CTI Sample ID	描述 Description
1	001	黑色塑料颗粒 Black plastic grains

备注: **对于检测铅，镉，汞之样品已消解完全。**
-N.D. = 未检出（小于方法检出限）
-mg/kg = ppm = 百万分之一
-1000 mg/kg = 0.1%

Remark: **The sample(s) had been dissolved totally tested for Lead, Cadmium, Mercury.**
-MDL = Method Detection Limit
-N.D. = Not Detected (<MDL)
-mg/kg = ppm = parts per million
-1000 mg/kg = 0.1%

检测报告
Test Report

检测流程 Test Process

1. **铅(Pb)，镉(Cd)，铬(Cr)**

Lead (Pb), Cadmium (Cd), Chromium (Cr)

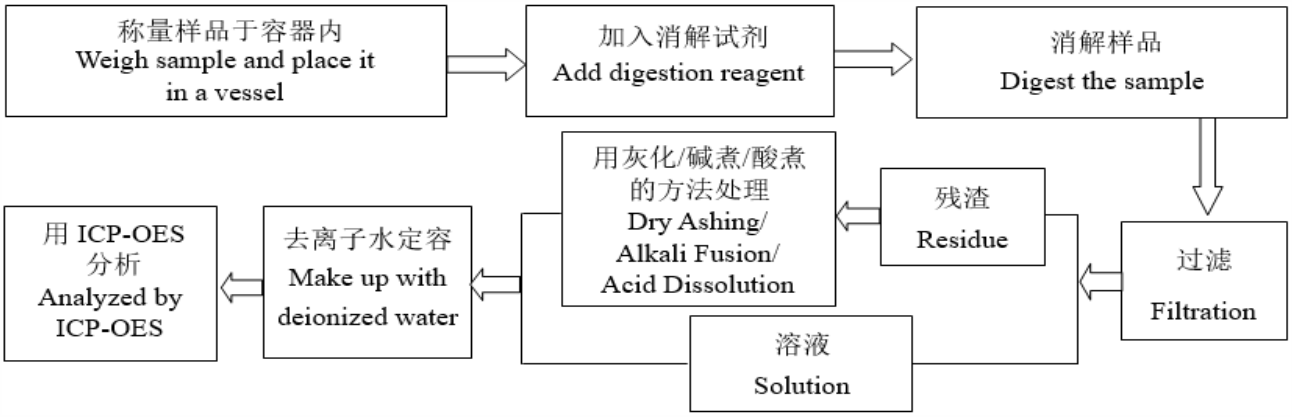

2. **汞(Hg)**

Mercury (Hg)

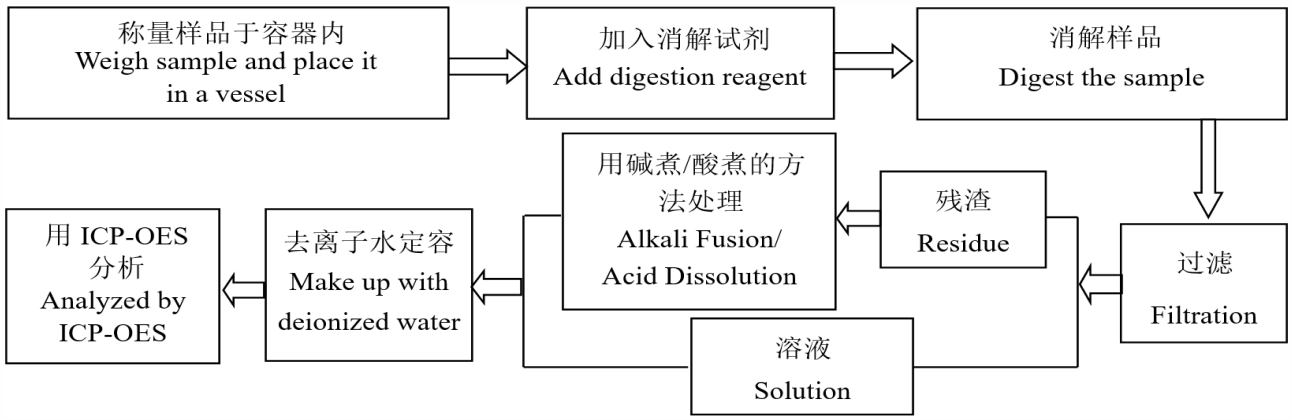

3. **六价铬(Cr(VI))**

Hexavalent Chromium (Cr(VI))

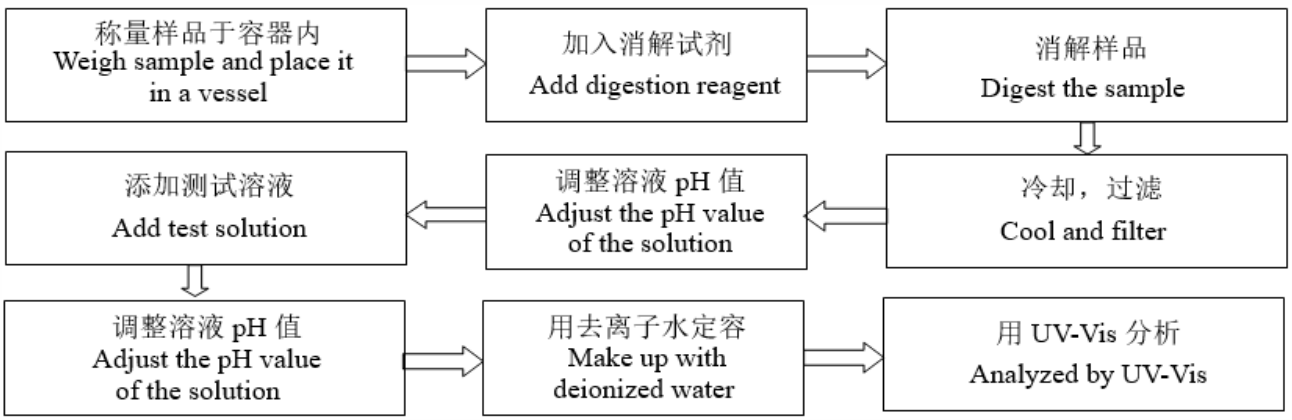

4. 多溴联苯(PBBs)， 多溴二苯醚(PBDEs)

Polybrominated Biphenyls (PBBs), Polybrominated Diphenyl Ethers (PBDEs)

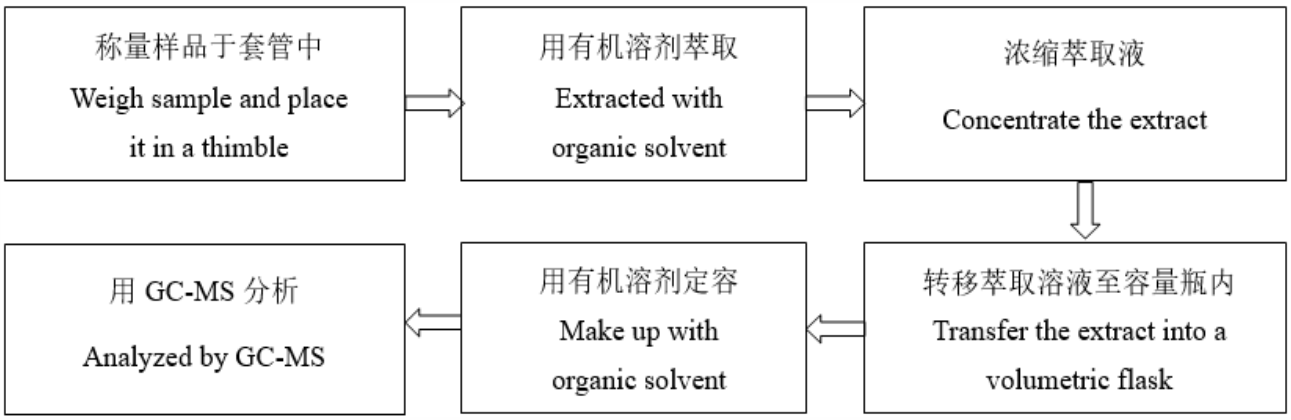

5. 邻苯二甲酸酯(DBP， BBP， DEHP， DIBP)

Phthalates (DBP, BBP, DEHP, DIBP)

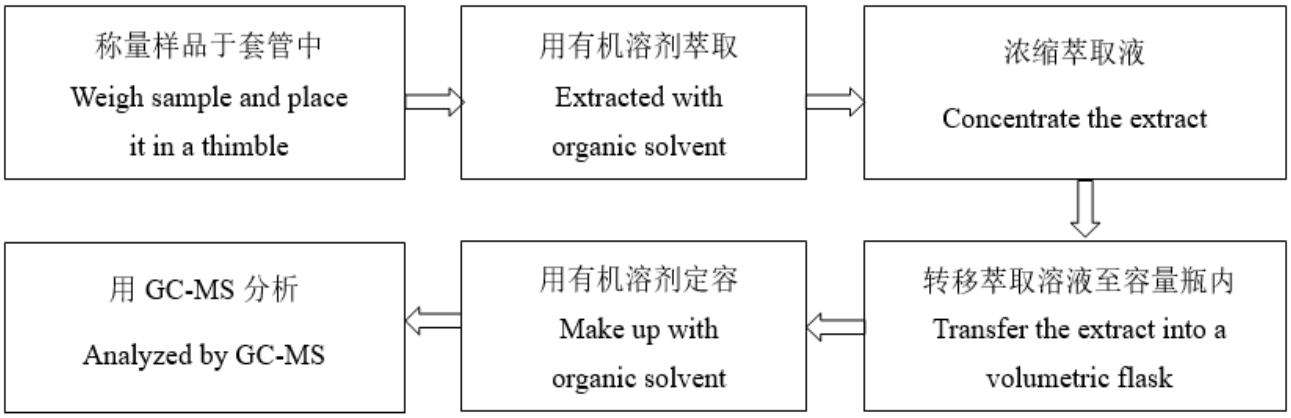

检测报告
Test Report

样品图片
Photo(s) of the sample(s)



声明Statement：

1. 检测报告无批准人签字、“专用章”及报告骑缝章无效；
   This report is considered invalid without approved signature, special seal and the seal on the perforation;
2. 报告抬头公司名称及地址、样品及样品信息由申请者提供，申请者应对其真实性负责，CTI未核实其真实性；
   The Company Name shown on Report and Address, the sample(s) and sample information was/were provided by the applicant who should be responsible for the authenticity which CTI hasn’t verified;
3. 本报告检测结果仅对受测样品负责；
   The result(s) shown in this report refer(s) only to the sample(s) tested;
4. 除非另有说明，报告参照ILAC-G8:09/2019 / CNAS-GL015:2022使用简单接受(w=0)二元判定规则进行符合性判定;
   Unless otherwise stated, the decision rule for conformity reporting is based on Binary Statement for Simple Acceptance Rule (w=0) stated in ILAC-G8:09/2019 / CNAS-GL015:2022;
5. 未经CTI书面同意，不得部分复制本报告；
   Without written approval of CTI, this report can’t be reproduced except in full;
6. 如检测报告中的英文内容与中文内容有差异，以中文为准。
   In case of any discrepancy between the English version and Chinese version of the testing reports (if generated), the Chinese version shall prevail.

报告结束

*** End of report ***

Test Report

No.: CANEC24002065602 **Date:** Feb 04, 2024

Client Name: DONGGUAN LUCKY FLY CONDUCTORCO.LTD

Client Address: QIAO ZI REGION CHANGPING TOWN DONGGUAN CITY GUANGDONG PROVINCE

Sample Name: TINNED COPPER WIRE

The above sample(s) and information were provided by the client.

SGS Job No.: GZP24-002885

Sample Receiving Date: Jan 26, 2024

Testing Period: Jan 26, 2024 ~ Feb 03, 2024

Test Requested: Select test(s) as requested by the client.

Test Method(s): Please refer to next page(s).

Test Result(s): Please refer to next page(s).

Test Requirement	Conclusion
EU RoHS Directive (EU) 2015/863 amending Annex II to Directive 2011/65/EU - Lead, Mercury, Cadmium, Hexavalent chromium, Polybrominated biphenyls (PBB), Polybrominated diphenyl ethers (PBDE), Bis(2-ethylhexyl) phthalate (DEHP), Butyl benzyl phthalate (BBP), Dibutyl phthalate (DBP) and Diisobutyl phthalate (DIBP)	Pass
AfPS GS 2019:01 PAK-Polycyclic Aromatic Hydrocarbons (PAHs)	See Results
Perfluorooctane Sulfonates (PFOS) and its derivatives	See Results
Element(s)	See Results

Signed for and on behalf of
SGS-CSTC Standards Technical Services Co., Ltd. Guangzhou Branch

Arsene Ye

Arsene Ye
Approved Signatory

scan to see the report
8CF560E7

Unless otherwise agreed in writing, this document is issued by the Company subject to its General Conditions of Service printed overleaf, available on request or accessible at https://www.sgs.com/en/Terms-and-Conditions. Attention is drawn to the limitation of liability, indemnification and jurisdiction issues defined therein. Any holder of this document is advised that information contained hereon reflects the Company's findings at the time of its intervention only and within the limits of Client's instructions, if any. The Company's sole responsibility is to its Client and this document does not exonerate parties to a transaction from exercising all their rights and obligations under the transaction documents. This document cannot be reproduced except in full, without prior written approval of the Company. Any unauthorized alteration, forgery or falsification of the content or appearance of this document is unlawful and offenders may be prosecuted to the fullest extent of the law. Unless otherwise stated the results shown in this test report refer only to the sample(s) tested.
Attention: To check the authenticity of testing /inspection report & certificate, please contact us at telephone: (86-755) 8307 1443, or email: CN.Doccheck@sgs.com

SGS-CSTC Standards Technical Services Co., Ltd. Guangzhou Branch Technical Services Technical Laboratory
No.198, Kezhu Road, Science City, Economic & Technological Development Area, Guangzhou, Guangdong, China 510663
中国·广东·广州高新技术产业开发区科学城科珠路198号 邮编: 510663
t (86-20) 82155555 www.sgsgroup.com.cn
t (86-20) 82155555 sgs.china@sgs.com

Test Result(s):

Test Part Description：

SN ID	Sample No.	SGS Sample ID	Description
SN1	A2	CAN24-0020656-0001.C002	Silvery plated metal wire

Remarks:

(1) 1 mg/kg = 1 ppm = 0.0001%
(2) MDL = Method Detection Limit
(3) ND = Not Detected (< MDL)
(4) "-" = Not Regulated

EU RoHS Directive (EU) 2015/863 amending Annex II to Directive 2011/65/EU - Lead, Mercury, Cadmium, Hexavalent chromium, Polybrominated biphenyls (PBB), Polybrominated diphenyl ethers (PBDE), Bis(2-ethylhexyl) phthalate (DEHP), Butyl benzyl phthalate (BBP), Dibutyl phthalate (DBP) and Diisobutyl phthalate (DIBP)

Test Method: With reference to IEC 62321-4:2013+AMD1:2017, IEC 62321-5:2013, IEC 62321-7-1:2015, IEC 62321-6:2015 and IEC62321-8:2017, analysis was performed by ICP-OES/AAS, UV-Vis and GC-MS.

Test Item(s)	Limit	Unit(s)	MDL	A2
Lead (Pb)	1000	mg/kg	2	ND
Mercury (Hg)	1000	mg/kg	2	ND
Cadmium (Cd)	100	mg/kg	2	ND
Hexavalent Chromium (Cr(VI))▼	-	µg/cm²	0.10	ND
Polybrominated biphenyls (PBB)	1000	mg/kg	-	ND
Monobrominated biphenyl (MonoBB)	-	mg/kg	5	ND
Dibrominated biphenyl (DiBB)	-	mg/kg	5	ND
Tribrominated biphenyl (TriBB)	-	mg/kg	5	ND
Tetrabrominated biphenyl (TetraBB)	-	mg/kg	5	ND
Pentabrominated biphenyl (PentaBB)	-	mg/kg	5	ND
Hexabrominated biphenyl (HexaBB)	-	mg/kg	5	ND
Heptabrominated biphenyl (HeptaBB)	-	mg/kg	5	ND
Octabrominated biphenyl (OctaBB)	-	mg/kg	5	ND
Nonabrominated biphenyl (NonaBB)	-	mg/kg	5	ND
Decabrominated biphenyl (DecaBB)	-	mg/kg	5	ND
Polybrominated diphenyl ethers (PBDE)	1000	mg/kg	-	ND
Monobrominated diphenyl ether (MonoBDE)	-	mg/kg	5	ND
Dibrominated diphenyl ether (DiBDE)	-	mg/kg	5	ND
Tribrominated diphenyl ether (TriBDE)	-	mg/kg	5	ND
Tetrabrominated diphenyl ether (TetraBDE)	-	mg/kg	5	ND
Pentabrominated diphenyl ether (PentaBDE)	-	mg/kg	5	ND
Hexabrominated diphenyl ether (HexaBDE)	-	mg/kg	5	ND
Heptabrominated diphenyl ether (HeptaBDE)	-	mg/kg	5	ND

SGS-CSTC Standards Technical Services Co., Ltd. Guangzhou Branch Testing Center, Chemical Laboratory
检验检测专用章 Inspection & Testing Services

Unless otherwise agreed in writing, this document is issued by the Company subject to its General Conditions of Service printed overleaf, available on request or accessible at https://www.sgs.com/en/Terms-and-Conditions. Attention is drawn to the limitation of liability, indemnification and jurisdiction issues defined therein. Any holder of this document is advised that information contained hereon reflects the Company's findings at the time of its intervention only and within the limits of Client's instructions, if any. The Company's sole responsibility is to its Client and this document does not exonerate parties to a transaction from exercising all their rights and obligations under the transaction documents. This document cannot be reproduced except in full, without prior written approval of the Company. Any unauthorized alteration, forgery or falsification of the content or appearance of this document is unlawful and offenders may be prosecuted to the fullest extent of the law. Unless otherwise stated the results shown in this test report refer only to the sample(s) tested.
Attention: To check the authenticity of testing /inspection report & certificate, please contact us at telephone: (86-755) 8307 1443, or email: CN.Doccheck@sgs.com

No.198, Kezhu Road, Science City, Economic & Technological Development Area, Guangzhou, Guangdong, China 510663 t (86–20) 82155555 www.sgsgroup.com.cn
中国·广东·广州高新技术产业开发区科学城科珠路198号 邮编: 510663 t (86–20) 82155555 sgs.china@sgs.com

Test Item(s)	Limit	Unit(s)	MDL	A2
Octabrominated diphenyl ether (OctaBDE)	-	mg/kg	5	ND
Nonabrominated diphenyl ether (NonaBDE)	-	mg/kg	5	ND
Decabrominated diphenyl ether (DecaBDE)	-	mg/kg	5	ND
Bis(2-ethylhexyl) phthalate (DEHP)	1000	mg/kg	50	ND
Butyl benzyl phthalate (BBP)	1000	mg/kg	50	ND
Dibutyl phthalate (DBP)	1000	mg/kg	50	ND
Diisobutyl phthalate (DIBP)	1000	mg/kg	50	ND

Notes:
(1) The maximum permissible limit is quoted from RoHS Directive (EU) 2015/863.
(2) IEC 62321 series is equivalent to EN 62321 series.
(3) ▼ =
a. The sample is positive for Cr(VI) if the Cr(VI)concentration is greater than 0.13 μg/cm^2. The sample coating is considered to contain Cr(VI).
b. The sample is negative for Cr(VI) if Cr(VI) is ND (concentration less than 0.10 μg/cm^2). The coating is considered a non-Cr(VI) based coating.
c. The result between 0.10 μg/cm^2 and 0.13 μg/cm^2 is considered to be inconclusive-unavoidable coating variations may influence the determination.

Information on storage conditions and production date of the tested sample is unavailable and thus Cr(VI) results represent status of the sample at the time of testing.

AfPS GS 2019:01 PAK-Polycyclic Aromatic Hydrocarbons (PAHs)

Test Method: With reference to AfPS GS 2019:01 PAK, analysis was performed by GC-MS.

Test Item(s)	CAS No.	Unit(s)	MDL	A2
Benzo(a)pyrene(BaP)	50-32-8	mg/kg	0.1	ND
Benzo(e)pyrene(BeP)	192-97-2	mg/kg	0.1	ND
Benzo(a)anthracene(BaA)	56-55-3	mg/kg	0.1	ND
Benzo(b)Fluoranthene(BbF)	205-99-2	mg/kg	0.1	ND
Benzo(j)fluoranthene(BjF)	205-82-3	mg/kg	0.1	ND
Benzo(k)Fluoranthene(BkF)	207-08-9	mg/kg	0.1	ND
Chrysene(CHR)	218-01-9	mg/kg	0.1	ND
Dibenzo(a,h)Anthracene(DBA)	53-70-3	mg/kg	0.1	ND
Benzo(g,h,i)perylene(BPE)	191-24-2	mg/kg	0.1	ND
Indeno(1,2,3-c,d)pyrene(IPY)	193-39-5	mg/kg	0.1	ND
Phenanthrene(PHE)	85-01-8	mg/kg	0.1	ND
Pyrene(PYR)	129-00-0	mg/kg	0.1	ND
Anthracene(ANT)	120-12-7	mg/kg	0.1	ND
Fluoranthene(FLT)	206-44-0	mg/kg	0.1	ND
Sum of Phenanthrene(PHE), Pyrene(PYR), Anthracene(ANT), Fluoranthene(FLT)	-	mg/kg	-	ND
Naphthalene(NAP)	91-20-3	mg/kg	0.1	ND
Sum of 15 PAHs	-	mg/kg	-	ND

检验检测专用章 Inspection & Testing Services
SGS-CSTC Standards Technical Services Co., Ltd. Guangzhou Branch Technical Services Co., Ltd. Chemical Laboratory

Unless otherwise agreed in writing, this document is issued by the Company subject to its General Conditions of Service printed overleaf, available on request or accessible at https://www.sgs.com/en/Terms-and-Conditions. Attention is drawn to the limitation of liability, indemnification and jurisdiction issues defined therein. Any holder of this document is advised that information contained hereon reflects the Company's findings at the time of its intervention only and within the limits of Client's instructions, if any. The Company's sole responsibility is to its Client and this document does not exonerate parties to a transaction from exercising all their rights and obligations under the transaction documents. This document cannot be reproduced except in full, without prior written approval of the Company. Any unauthorized alteration, forgery or falsification of the content or appearance of this document is unlawful and offenders may be prosecuted to the fullest extent of the law. Unless otherwise stated the results shown in this test report refer only to the sample(s) tested.
Attention: To check the authenticity of testing /inspection report & certificate, please contact us at telephone: (86-755) 8307 1443, or email: CN.Doccheck@sgs.com

No.198, Kezhu Road, Science City, Economic & Technological Development Area, Guangzhou, Guangdong, China 510663 t (86–20) 82155555 www.sgsgroup.com.cn
中国·广东·广州高新技术产业开发区科学城科珠路198号 邮编: 510663 t (86–20) 82155555 sgs.china@sgs.com

Test Item(s)	CAS No.	Unit(s)	MDL	A2
Material Category	-	-	-	-

Notes:

AfPS（German commission for Product Safety）: PAHs requirements

Parameter	Category 1	Category 2		Category 3	
	Materials intended to be placed in the mouth, or materials coming into long-term contact with skin (more than 30s) during the intended use -in toys according to Directive 2009/48/EC or -for the use by children[a,b] up to 3 years of age.	Materials not covered by category 1, coming into long-term contact (more than 30s) or short-term repetitive contact[c] with skin during the intended or foreseeable use[d].		Materials covered neither by category 1 nor by category 2, coming into short-term contact (up to 30s) with skin during the intended or foreseeable use.	
		a. use by children	b. other consumer products	a. use by children	b. other consumer products
Benzo(a)pyrene (BaP) mg/kg	< 0.2	< 0.2	< 0.5	< 0.5	< 1
Benzo(e)pyrene (BeP) mg/kg	< 0.2	< 0.2	< 0.5	< 0.5	< 1
Benzo(a)anthracene (BaA) mg/kg	< 0.2	< 0.2	< 0.5	< 0.5	< 1
Benzo(b)fluoranthene (BbF) mg/kg	< 0.2	< 0.2	< 0.5	< 0.5	< 1
Benzo(j)fluoranthene (BjF) mg/kg	< 0.2	< 0.2	< 0.5	< 0.5	< 1
Benzo(k)fluoranthene (BkF)mg/kg	< 0.2	< 0.2	< 0.5	< 0.5	< 1
Chrysene (CHR) mg/kg	< 0.2	< 0.2	< 0.5	< 0.5	< 1
Dibenzo(a,h)anthracene (DBA) mg/kg	< 0.2	< 0.2	< 0.5	< 0.5	< 1
Benzo(g,h,i)perylene (BPE) mg/kg	< 0.2	< 0.2	< 0.5	< 0.5	< 1
Indeno(1,2,3-cd)pyrene (IPY) mg/kg	< 0.2	< 0.2	< 0.5	< 0.5	< 1

SGS-CSTC Standards Technical Services Co., Ltd. Guangzhou Branch Testing Center Chemical Laboratory
检验检测专用章 Inspection & Testing Services

Unless otherwise agreed in writing, this document is issued by the Company subject to its General Conditions of Service printed overleaf, available on request or accessible at https://www.sgs.com/en/Terms-and-Conditions. Attention is drawn to the limitation of liability, indemnification and jurisdiction issues defined therein. Any holder of this document is advised that information contained hereon reflects the Company's findings at the time of its intervention only and within the limits of Client's instructions, if any. The Company's sole responsibility is to its Client and this document does not exonerate parties to a transaction from exercising all their rights and obligations under the transaction documents. This document cannot be reproduced except in full, without prior written approval of the Company. Any unauthorized alteration, forgery or falsification of the content or appearance of this document is unlawful and offenders may be prosecuted to the fullest extent of the law. Unless otherwise stated the results shown in this test report refer only to the sample(s) tested.
Attention: To check the authenticity of testing /inspection report & certificate, please contact us at telephone: (86-755) 8307 1443, or email: CN.Doccheck@sgs.com

No.198, Kezhu Road, Science City, Economic & Technological Development Area, Guangzhou, Guangdong, China 510663 t (86–20) 82155555 www.sgsgroup.com.cn
中国・广东・广州高新技术产业开发区科学城科珠路198号 邮编: 510663 t (86–20) 82155555 sgs.china@sgs.com

Member of the SGS Group (SGS SA)

Phenanthrene (PHE), pyrene (PYR), anthracene (ANT), fluoranthene (FLT), mg/kg	< 1 Sum	< 5 Sum	< 10 Sum	< 20 Sum	< 50 Sum
Naphthalene (NAP) mg/kg	< 1	< 2		< 10	
Sum of 15 PAHs	<1	< 5	< 10	< 20	< 50

Notes:
[a] A "Child" is legally defined as a person before reaching the age of 14 years.
[b] Use by children includes both active and passive contact by children.
[c] Definition "short-term repetitive contact" taken from REACH Annex XVII entry 50 amendment (Regulation (EC) No.1272/2013)
[d] According to the definition of the German Product Safety Act (ProdSG) (chapter 1 Article 2 No. 28) "foreseeable use" shall mean the use of a product in a manner that the person placing it on the market, has not intended, but which could be reasonably foreseeable.

Remark:
The German committee on Product Safety (AfPS) published a new PAHs document (AfPS GS 2019:01 PAK) on April 10, 2020, which will be binding for the issue of GS mark certificate from July 1, 2020.

Perfluorooctane Sulfonates (PFOS) and its derivatives

Test Method: Modified CEN/TS 15968:2010, analysis was performed by LC-MS or LC-MS/MS.

Test Item(s)	CAS No.	Unit(s)	MDL	A2
PFOS and its derivatives	-	mg/kg	-	ND
Perfluorooctane Sulfonates (PFOS) and its salts*	1763-23-1	mg/kg	0.010	ND
N-ethylperfluoro-1-octanesulfonamide (N-EtFOSA)	4151-50-2	mg/kg	0.010	ND
N-methylperfluoro-1-octanesulfonamide (N-MeFOSA)	31506-32-8	mg/kg	0.010	ND
2-(N-ethylperfluoro-1-octanesulfonamido) -ethanol (N-EtFOSE)	1691-99-2	mg/kg	0.010	ND
2-(N-methylperfluoro-1-octanesulfonamido) -ethanol (N-MeFOSE)	24448-09-7	mg/kg	0.010	ND
Perfluorooctane Sulfonamide (PFOSA)	754-91-6	mg/kg	0.010	ND

Notes:
(1) Perfluorooctane sulfonates (PFOS) and its salts* including PFOS (CAS No. 1763-23-1), POSF(CAS No. 307-35-7), PFOS-K (CAS No. 2795-39-3), PFOS-NH_4 (CAS No. 29081-56-9), PFOS-$N(C_{10}H_{21})_2(CH_3)_2$ (CAS No. 251099-16-8), PFOS-$NH_2(C_2H_4OH)_2$ (CAS No. 70225-14-8), PFOS-Li (CAS No. 29457-72-5), PFOS-$N(C_2H_5)_4$ (CAS No. 56773-42-3) and PFOS-Na (CAS No. 4021-47-0). The result of PFOS is used to represent PFOS and its salts.

检验检测专用章 Inspection & Testing Services
SGS-CSTC Standards Technical Services Co., Ltd. Guangzhou Branch Testing Center Chemical Laboratory

Unless otherwise agreed in writing, this document is issued by the Company subject to its General Conditions of Service printed overleaf, available on request or accessible at https://www.sgs.com/en/Terms-and-Conditions. Attention is drawn to the limitation of liability, indemnification and jurisdiction issues defined therein. Any holder of this document is advised that information contained hereon reflects the Company's findings at the time of its intervention only and within the limits of Client's instructions, if any. The Company's sole responsibility is to its Client and this document does not exonerate parties to a transaction from exercising all their rights and obligations under the transaction documents. This document cannot be reproduced except in full, without prior written approval of the Company. Any unauthorized alteration, forgery or falsification of the content or appearance of this document is unlawful and offenders may be prosecuted to the fullest extent of the law. Unless otherwise stated the results shown in this test report refer only to the sample(s) tested.
Attention: To check the authenticity of testing /inspection report & certificate, please contact us at telephone: (86-755) 8307 1443, or email: CN.Doccheck@sgs.com

No.198, Kezhu Road, Science City, Economic & Technological Development Area, Guangzhou, Guangdong, China 510663 t (86–20) 82155555 www.sgsgroup.com.cn
中国·广东·广州高新技术产业开发区科学城科珠路198号 邮编: 510663 t (86–20) 82155555 sgs.china@sgs.com

Element(s)

Test Method: With reference to US EPA 3050B:1996, analysis was performed by ICP-OES/AAS.

Test Item(s)	Unit(s)	MDL	A2
Beryllium(Be)	mg/kg	5	ND

Unless otherwise stated, the decision rule for conformity reporting is based on Binary Statement for Simple Acceptance Rule (*w*=0) stated in ILAC-G8:09/2019.

SGS-CSTC Standards Technical Services Co., Ltd. Guangzhou Branch Testing Center / Chemical Laboratory.

Unless otherwise agreed in writing, this document is issued by the Company subject to its General Conditions of Service printed overleaf, available on request or accessible at https://www.sgs.com/en/Terms-and-Conditions. Attention is drawn to the limitation of liability, indemnification and jurisdiction issues defined therein. Any holder of this document is advised that information contained hereon reflects the Company's findings at the time of its intervention only and within the limits of Client's instructions, if any. The Company's sole responsibility is to its Client and this document does not exonerate parties to a transaction from exercising all their rights and obligations under the transaction documents. This document cannot be reproduced except in full, without prior written approval of the Company. Any unauthorized alteration, forgery or falsification of the content or appearance of this document is unlawful and offenders may be prosecuted to the fullest extent of the law. Unless otherwise stated the results shown in this test report refer only to the sample(s) tested.
Attention: To check the authenticity of testing /inspection report & certificate, please contact us at telephone: (86-755) 8307 1443, or email: CN.Doccheck@sgs.com

No.198, Kezhu Road, Science City, Economic & Technological Development Area, Guangzhou, Guangdong, China 510663 t (86–20) 82155555 www.sgsgroup.com.cn
中国·广东·广州高新技术产业开发区科学城科珠路198号 邮编: 510663 t (86–20) 82155555 sgs.china@sgs.com

Member of the SGS Group (SGS SA)

ATTACHMENTS

Elements Testing Flow Chart

These samples were dissolved totally by pre-conditioning method according to below flow chart.

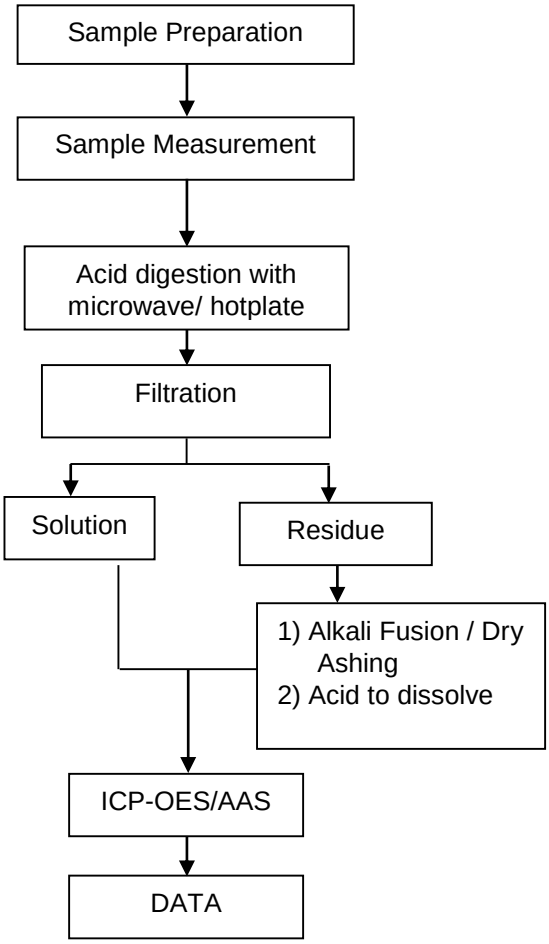

Unless otherwise agreed in writing, this document is issued by the Company subject to its General Conditions of Service printed overleaf, available on request or accessible at https://www.sgs.com/en/Terms-and-Conditions. Attention is drawn to the limitation of liability, indemnification and jurisdiction issues defined therein. Any holder of this document is advised that information contained hereon reflects the Company's findings at the time of its intervention only and within the limits of Client's instructions, if any. The Company's sole responsibility is to its Client and this document does not exonerate parties to a transaction from exercising all their rights and obligations under the transaction documents. This document cannot be reproduced except in full, without prior written approval of the Company. Any unauthorized alteration, forgery or falsification of the content or appearance of this document is unlawful and offenders may be prosecuted to the fullest extent of the law. Unless otherwise stated the results shown in this test report refer only to the sample(s) tested.
Attention: To check the authenticity of testing /inspection report & certificate, please contact us at telephone: (86-755) 8307 1443, or email: CN.Doccheck@sgs.com

SGS-CSTC Standards Technical Services Co., Ltd. Guangzhou Branch Testing Center / Chemical Laboratory
No.198, Kezhu Road, Science City, Economic & Technological Development Area, Guangzhou, Guangdong, China 510663 t (86–20) 82155555 www.sgsgroup.com.cn
中国·广东·广州高新技术产业开发区科学城科珠路198号 邮编: 510663 t (86–20) 82155555 sgs.china@sgs.com
Member of the SGS Group (SGS SA)

ATTACHMENTS

Hexavalent Chromium (Cr(VI)) Testing Flow Chart

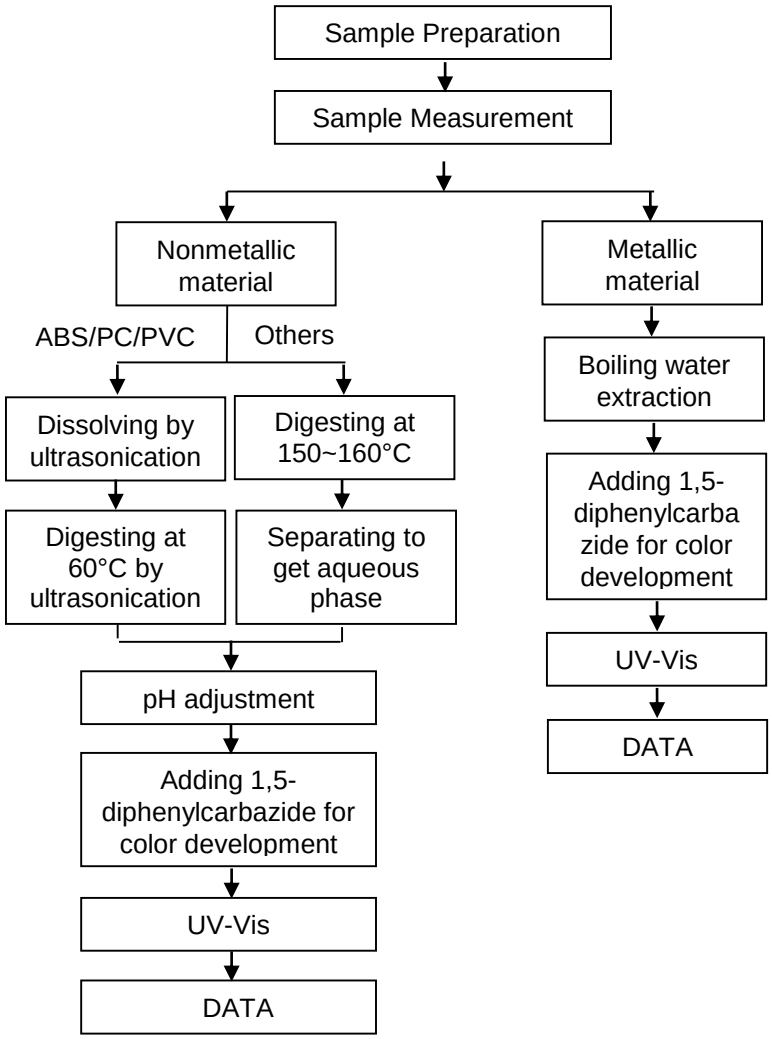

Unless otherwise agreed in writing, this document is issued by the Company subject to its General Conditions of Service printed overleaf, available on request or accessible at https://www.sgs.com/en/Terms-and-Conditions. Attention is drawn to the limitation of liability, indemnification and jurisdiction issues defined therein. Any holder of this document is advised that information contained hereon reflects the Company's findings at the time of its intervention only and within the limits of Client's instructions, if any. The Company's sole responsibility is to its Client and this document does not exonerate parties to a transaction from exercising all their rights and obligations under the transaction documents. This document cannot be reproduced except in full, without prior written approval of the Company. Any unauthorized alteration, forgery or falsification of the content or appearance of this document is unlawful and offenders may be prosecuted to the fullest extent of the law. Unless otherwise stated the results shown in this test report refer only to the sample(s) tested.
Attention: To check the authenticity of testing /inspection report & certificate, please contact us at telephone: (86-755) 8307 1443, or email: CN.Doccheck@sgs.com

SGS-CSTC Standards Technical Services Co., Ltd. Guangzhou Branch Testing Center
No.198, Kezhu Road, Science City, Economic & Technological Development Area, Guangzhou, Guangdong, China 510663
中国·广东·广州高新技术产业开发区科学城科珠路198号 邮编: 510663
t (86-20) 82155555 www.sgsgroup.com.cn
t (86-20) 82155555 sgs.china@sgs.com

ATTACHMENTS

PBB/PBDE Testing Flow Chart

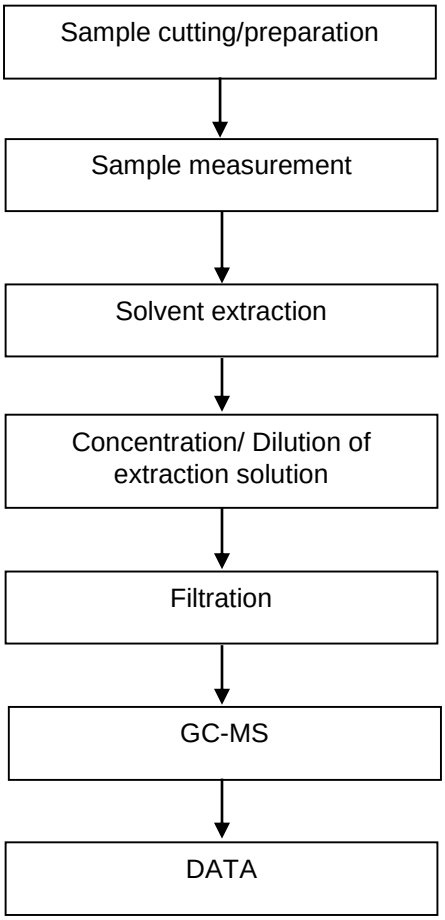

Unless otherwise agreed in writing, this document is issued by the Company subject to its General Conditions of Service printed overleaf, available on request or accessible at https://www.sgs.com/en/Terms-and-Conditions. Attention is drawn to the limitation of liability, indemnification and jurisdiction issues defined therein. Any holder of this document is advised that information contained hereon reflects the Company's findings at the time of its intervention only and within the limits of Client's instructions, if any. The Company's sole responsibility is to its Client and this document does not exonerate parties to a transaction from exercising all their rights and obligations under the transaction documents. This document cannot be reproduced except in full, without prior written approval of the Company. Any unauthorized alteration, forgery or falsification of the content or appearance of this document is unlawful and offenders may be prosecuted to the fullest extent of the law. Unless otherwise stated the results shown in this test report refer only to the sample(s) tested.
Attention: To check the authenticity of testing /inspection report & certificate, please contact us at telephone: (86-755) 8307 1443, or email: CN.Doccheck@sgs.com

SGS-CSTC Standards Technical Services Co., Ltd. Guangzhou Branch Testing Center / Chemical Laboratory
No.198, Kezhu Road, Science City, Economic & Technological Development Area, Guangzhou, Guangdong, China 510663 t (86–20) 82155555 www.sgsgroup.com.cn
中国·广东·广州高新技术产业开发区科学城科珠路198号 邮编: 510663 t (86–20) 82155555 sgs.china@sgs.com

ATTACHMENTS

Phthalates Testing Flow Chart

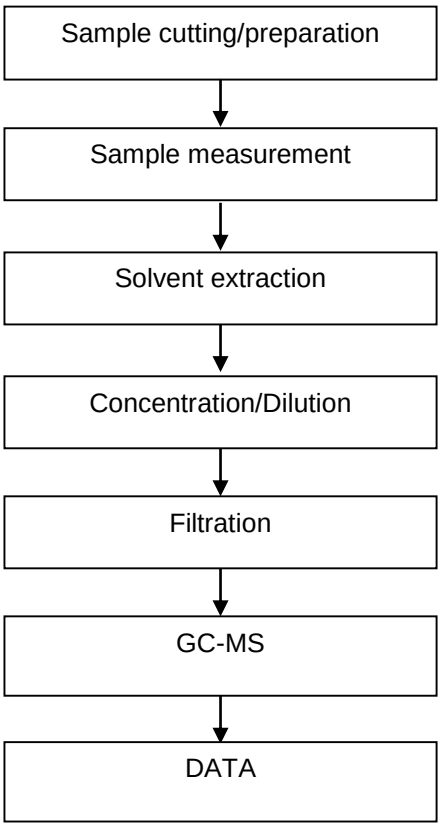

Unless otherwise agreed in writing, this document is issued by the Company subject to its General Conditions of Service printed overleaf, available on request or accessible at https://www.sgs.com/en/Terms-and-Conditions. Attention is drawn to the limitation of liability, indemnification and jurisdiction issues defined therein. Any holder of this document is advised that information contained hereon reflects the Company's findings at the time of its intervention only and within the limits of Client's instructions, if any. The Company's sole responsibility is to its Client and this document does not exonerate parties to a transaction from exercising all their rights and obligations under the transaction documents. This document cannot be reproduced except in full, without prior written approval of the Company. Any unauthorized alteration, forgery or falsification of the content or appearance of this document is unlawful and offenders may be prosecuted to the fullest extent of the law. Unless otherwise stated the results shown in this test report refer only to the sample(s) tested.
Attention: To check the authenticity of testing /inspection report & certificate, please contact us at telephone: (86-755) 8307 1443, or email: CN.Doccheck@sgs.com

SGS-CSTC Standards Technical Services Co., Ltd. Guangzhou Branch Testing Center / Chemical Laboratory
No.198, Kezhu Road, Science City, Economic & Technological Development Area, Guangzhou, Guangdong, China 510663 t (86–20) 82155555 www.sgsgroup.com.cn
中国·广东·广州高新技术产业开发区科学城科珠路198号 邮编: 510663 t (86–20) 82155555 sgs.china@sgs.com
Member of the SGS Group (SGS SA)

ATTACHMENTS

PAHs Testing Flow Chart

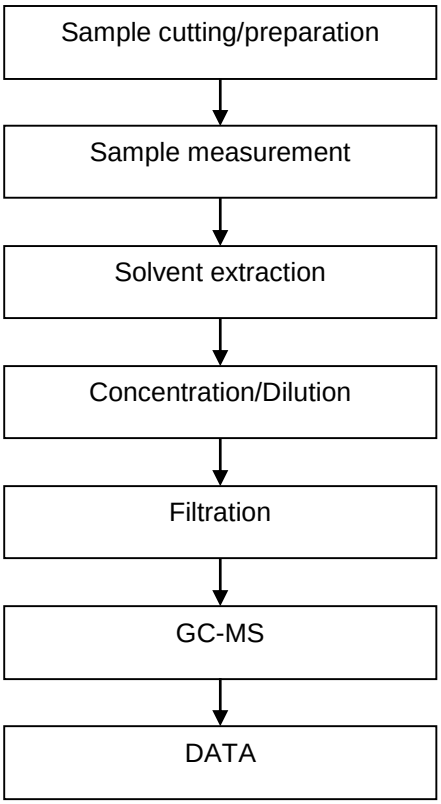

Unless otherwise agreed in writing, this document is issued by the Company subject to its General Conditions of Service printed overleaf, available on request or accessible at https://www.sgs.com/en/Terms-and-Conditions. Attention is drawn to the limitation of liability, indemnification and jurisdiction issues defined therein. Any holder of this document is advised that information contained hereon reflects the Company's findings at the time of its intervention only and within the limits of Client's instructions, if any. The Company's sole responsibility is to its Client and this document does not exonerate parties to a transaction from exercising all their rights and obligations under the transaction documents. This document cannot be reproduced except in full, without prior written approval of the Company. Any unauthorized alteration, forgery or falsification of the content or appearance of this document is unlawful and offenders may be prosecuted to the fullest extent of the law. Unless otherwise stated the results shown in this test report refer only to the sample(s) tested.
Attention: To check the authenticity of testing /inspection report & certificate, please contact us at telephone: (86-755) 8307 1443, or email: CN.Doccheck@sgs.com

SGS-CSTC Standards Technical Services Co., Ltd. Guangzhou Branch Testing Center
No.198, Kezhu Road, Science City, Economic & Technological Development Area, Guangzhou, Guangdong, China 510663 t (86–20) 82155555 www.sgsgroup.com.cn
中国·广东·广州高新技术产业开发区科学城科珠路198号 邮编: 510663 t (86–20) 82155555 sgs.china@sgs.com

ATTACHMENTS

PFASs/ PFOS/PFOA Testing Flow Chart

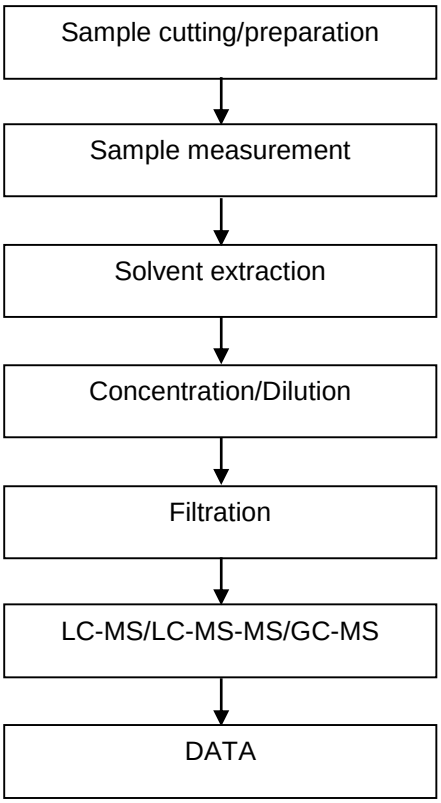

Unless otherwise agreed in writing, this document is issued by the Company subject to its General Conditions of Service printed overleaf, available on request or accessible at https://www.sgs.com/en/Terms-and-Conditions. Attention is drawn to the limitation of liability, indemnification and jurisdiction issues defined therein. Any holder of this document is advised that information contained hereon reflects the Company's findings at the time of its intervention only and within the limits of Client's instructions, if any. The Company's sole responsibility is to its Client and this document does not exonerate parties to a transaction from exercising all their rights and obligations under the transaction documents. This document cannot be reproduced except in full, without prior written approval of the Company. Any unauthorized alteration, forgery or falsification of the content or appearance of this document is unlawful and offenders may be prosecuted to the fullest extent of the law. Unless otherwise stated the results shown in this test report refer only to the sample(s) tested.
Attention: To check the authenticity of testing /inspection report & certificate, please contact us at telephone: (86-755) 8307 1443, or email: CN.Doccheck@sgs.com

SGS-CSTC Standards Technical Services Co., Ltd. Guangzhou Branch Testing Center / Chemical Laboratory
No.198, Kezhu Road, Science City, Economic & Technological Development Area, Guangzhou, Guangdong, China 510663 t (86–20) 82155555 www.sgsgroup.com.cn
中国·广东·广州高新技术产业开发区科学城科珠路198号 邮编: 510663 t (86–20) 82155555 sgs.china@sgs.com
Member of the SGS Group (SGS SA)

ATTACHMENTS

Elements Testing Flow Chart

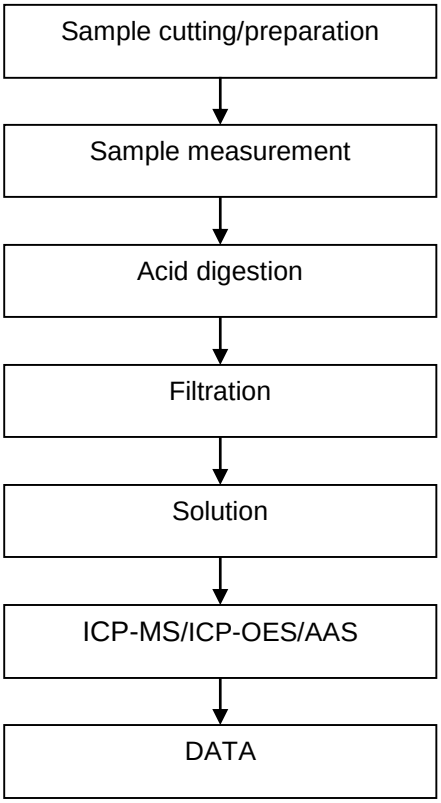

Unless otherwise agreed in writing, this document is issued by the Company subject to its General Conditions of Service printed overleaf, available on request or accessible at https://www.sgs.com/en/Terms-and-Conditions. Attention is drawn to the limitation of liability, indemnification and jurisdiction issues defined therein. Any holder of this document is advised that information contained hereon reflects the Company's findings at the time of its intervention only and within the limits of Client's instructions, if any. The Company's sole responsibility is to its Client and this document does not exonerate parties to a transaction from exercising all their rights and obligations under the transaction documents. This document cannot be reproduced except in full, without prior written approval of the Company. Any unauthorized alteration, forgery or falsification of the content or appearance of this document is unlawful and offenders may be prosecuted to the fullest extent of the law. Unless otherwise stated the results shown in this test report refer only to the sample(s) tested.
Attention: To check the authenticity of testing /inspection report & certificate, please contact us at telephone: (86-755) 8307 1443, or email: CN.Doccheck@sgs.com

SGS-CSTC Standards Technical Services Co., Ltd. Guangzhou Branch Testing Center / Chemical Laboratory
No.198, Kezhu Road, Science City, Economic & Technological Development Area, Guangzhou, Guangdong, China 510663 t (86–20) 82155555 www.sgsgroup.com.cn
中国·广东·广州高新技术产业开发区科学城科珠路198号 邮编: 510663 t (86–20) 82155555 sgs.china@sgs.com
Member of the SGS Group (SGS SA)

Sample Photo:

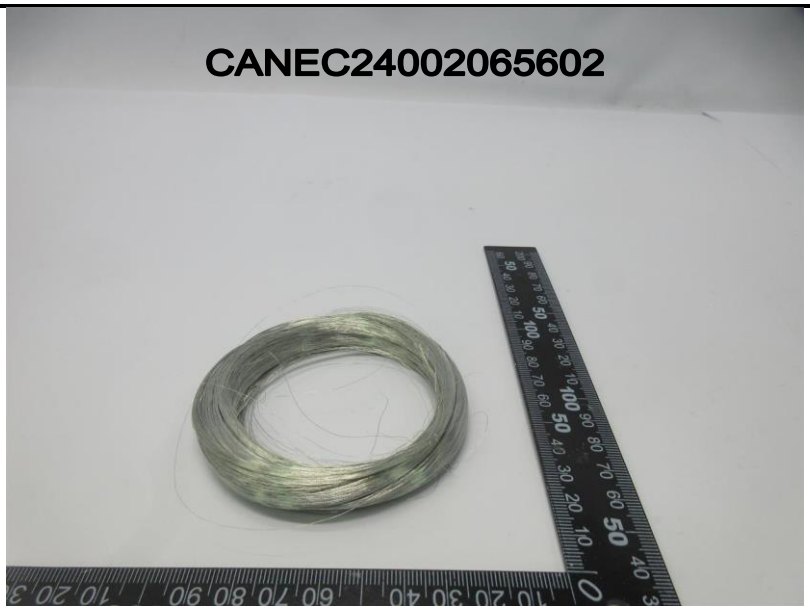

CAN24-0020656-0001.C002

SGS authenticate the photo on original report only

*** End of Report ***

Unless otherwise agreed in writing, this document is issued by the Company subject to its General Conditions of Service printed overleaf, available on request or accessible at https://www.sgs.com/en/Terms-and-Conditions. Attention is drawn to the limitation of liability, indemnification and jurisdiction issues defined therein. Any holder of this document is advised that information contained hereon reflects the Company's findings at the time of its intervention only and within the limits of Client's instructions, if any. The Company's sole responsibility is to its Client and this document does not exonerate parties to a transaction from exercising all their rights and obligations under the transaction documents. This document cannot be reproduced except in full, without prior written approval of the Company. Any unauthorized alteration, forgery or falsification of the content or appearance of this document is unlawful and offenders may be prosecuted to the fullest extent of the law. Unless otherwise stated the results shown in this test report refer only to the sample(s) tested.
Attention: To check the authenticity of testing /inspection report & certificate, please contact us at telephone: (86-755) 8307 1443, or email: CN.Doccheck@sgs.com

SGS-CSTC Standards Technical Services Co., Ltd. Guangzhou Branch Testing Center
No.198, Kezhu Road, Science City, Economic & Technological Development Area, Guangzhou, Guangdong, China 510663 t (86–20) 82155555 www.sgsgroup.com.cn
中国·广东·广州高新技术产业开发区科学城科珠路198号 邮编: 510663 t (86–20) 82155555 sgs.china@sgs.com

检测报告
Test Report

****

结论 Conclusion

测试样品 Tested Sample	依据标准/指令 According to standard/directive	结果 Result
提交样品 Submitted Sample	欧盟RoHS指令2011/65/EU及其修订指令(EU) 2015/863 RoHS Directive 2011/65/EU with amendment (EU) 2015/863	符合 PASS

****

符合表示检测结果满足欧盟RoHS指令2011/65/EU及其修订指令(EU) 2015/863要求的限值。
PASS means that the results shown on the report comply with the limits set by RoHS Directive 2011/65/EU with amendment (EU) 2015/863.

检测报告
Test Report

检测依据 Test Method

测试项目 Test Item(s)	测试方法 Test Method	测试仪器 Measured Equipment(s)
铅 Lead (Pb)	IEC 62321-5:2013	ICP-OES
镉 Cadmium (Cd)	IEC 62321-5:2013	ICP-OES
汞 Mercury (Hg)	IEC 62321-4:2013+AMD1:2017 CSV	ICP-OES
六价铬 Hexavalent Chromium (Cr(VI))	IEC 62321-7-2:2017和/或IEC 62321-5:2013测试总铬含量 IEC 62321-7-2:2017 and/or determination of Total Chromium by IEC 62321-5:2013	UV-Vis/ICP-OES
多溴联苯 Polybrominated Biphenyls (PBBs)	IEC 62321-6:2015	GC-MS
多溴二苯醚 Polybrominated Diphenyl Ethers (PBDEs)	IEC 62321-6:2015	GC-MS
邻苯二甲酸酯 Phthalates (DBP, BBP, DEHP, DIBP)	IEC 62321-8:2017	GC-MS

检测报告
Test Report

检测结果 Test Result(s)

测试项目 Tested Item(s)	结果 Result	方法检出限 MDL	限值 Limit
	001		
铅 Lead (Pb)	N.D.	2 mg/kg	1000 mg/kg
镉 Cadmium (Cd)	N.D.	2 mg/kg	100 mg/kg
汞 Mercury (Hg)	N.D.	2 mg/kg	1000 mg/kg
六价铬 Hexavalent Chromium (Cr(VI))	N.D.	8 mg/kg	1000 mg/kg

测试项目 Tested Item(s)	结果 Result	方法检出限 MDL	限值 Limit
	001		
多溴联苯 Polybrominated Biphenyls (PBBs)			
一溴联苯 Monobromobiphenyl	N.D.	5 mg/kg	1000 mg/kg
二溴联苯 Dibromobiphenyl	N.D.	5 mg/kg	
三溴联苯 Tribromobiphenyl	N.D.	5 mg/kg	
四溴联苯 Tetrabromobiphenyl	N.D.	5 mg/kg	
五溴联苯 Pentabromobiphenyl	N.D.	5 mg/kg	
六溴联苯 Hexabromobiphenyl	N.D.	5 mg/kg	
七溴联苯 Heptabromobiphenyl	N.D.	5 mg/kg	
八溴联苯 Octabromobiphenyl	N.D.	5 mg/kg	
九溴联苯 Nonabromobiphenyl	N.D.	5 mg/kg	
十溴联苯 Decabromobiphenyl	N.D.	5 mg/kg	

测试项目 Tested Item(s)	结果 Result	方法检出限 MDL	限值 Limit
	001		
多溴二苯醚 Polybrominated Diphenyl Ethers (PBDEs)			
一溴二苯醚 Monobromodiphenyl ether	N.D.	5 mg/kg	1000 mg/kg
二溴二苯醚 Dibromodiphenyl ether	N.D.	5 mg/kg	
三溴二苯醚 Tribromodiphenyl ether	N.D.	5 mg/kg	
四溴二苯醚 Tetrabromodiphenyl ether	N.D.	5 mg/kg	
五溴二苯醚 Pentabromodiphenyl ether	N.D.	5 mg/kg	
六溴二苯醚 Hexabromodiphenyl ether	N.D.	5 mg/kg	
七溴二苯醚 Heptabromodiphenyl ether	N.D.	5 mg/kg	
八溴二苯醚 Octabromodiphenyl ether	N.D.	5 mg/kg	
九溴二苯醚 Nonabromodiphenyl ether	N.D.	5 mg/kg	
十溴二苯醚 Decabromodiphenyl ether	N.D.	5 mg/kg	

检测报告
Test Report

检测结果 Test Result(s)

测试项目 Tested Item(s)	结果 Result	方法检出限 MDL	限值 Limit
	001		
邻苯二甲酸酯 Phthalates (DBP, BBP, DEHP, DIBP)			
邻苯二甲酸二丁酯 Dibutyl phthalate (DBP) CAS#:84-74-2	N.D.	50 mg/kg	1000 mg/kg
邻苯二甲酸丁基苄基酯 Butyl benzyl phthalate (BBP) CAS#:85-68-7	N.D.	50 mg/kg	1000 mg/kg
邻苯二甲酸二(2-乙基)己酯 Di-(2-ethylhexyl) phthalate (DEHP) CAS#:117-81-7	N.D.	50 mg/kg	1000 mg/kg
邻苯二甲酸二异丁酯 Diisobutyl phthalate (DIBP) CAS#:84-69-5	N.D.	50 mg/kg	1000 mg/kg

样品/部位描述Sample/Part Description

序号 No.	CTI样品ID CTI Sample ID	描述 Description
1	001	黑色塑料颗粒 Black plastic grains

备注: **对于检测铅，镉，汞之样品已消解完全。**
-N.D. = 未检出（小于方法检出限）
-mg/kg = ppm = 百万分之一
-1000 mg/kg = 0.1%

Remark: **The sample(s) had been dissolved totally tested for Lead, Cadmium, Mercury.**
-MDL = Method Detection Limit
-N.D. = Not Detected (<MDL)
-mg/kg = ppm = parts per million
-1000 mg/kg = 0.1%

检测报告
Test Report

检测流程 Test Process

1. **铅(Pb)，镉(Cd)，铬(Cr)**

Lead (Pb), Cadmium (Cd), Chromium (Cr)

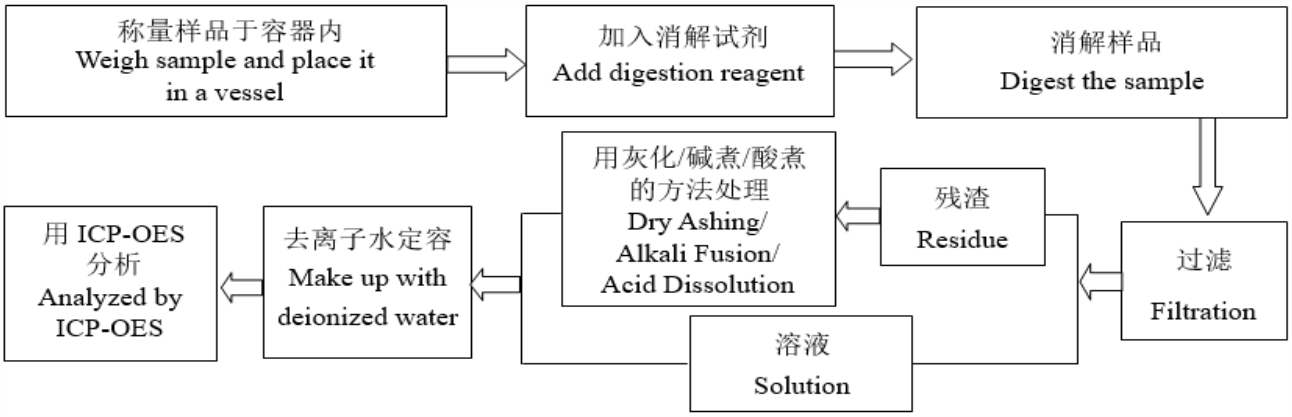

2. **汞(Hg)**

Mercury (Hg)

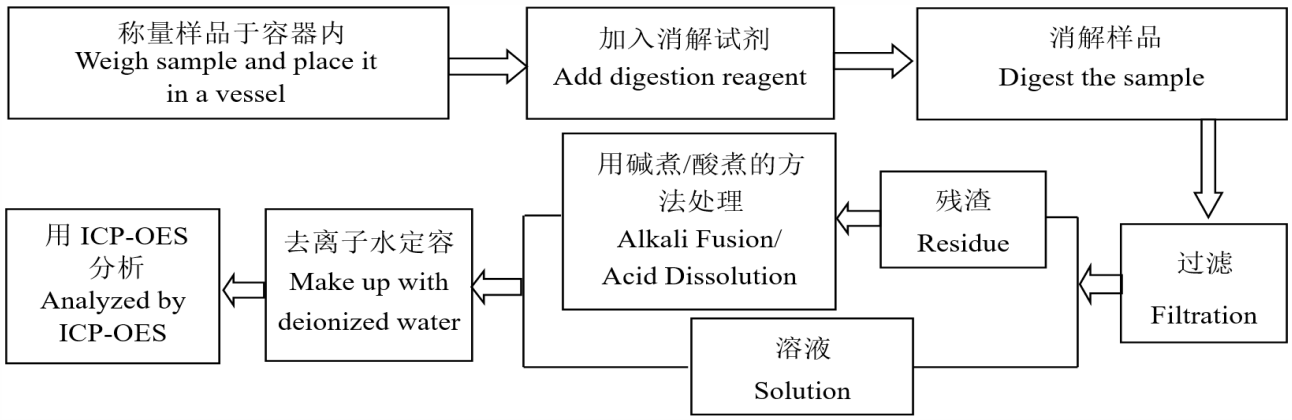

3. **六价铬(Cr(VI))**

Hexavalent Chromium (Cr(VI))

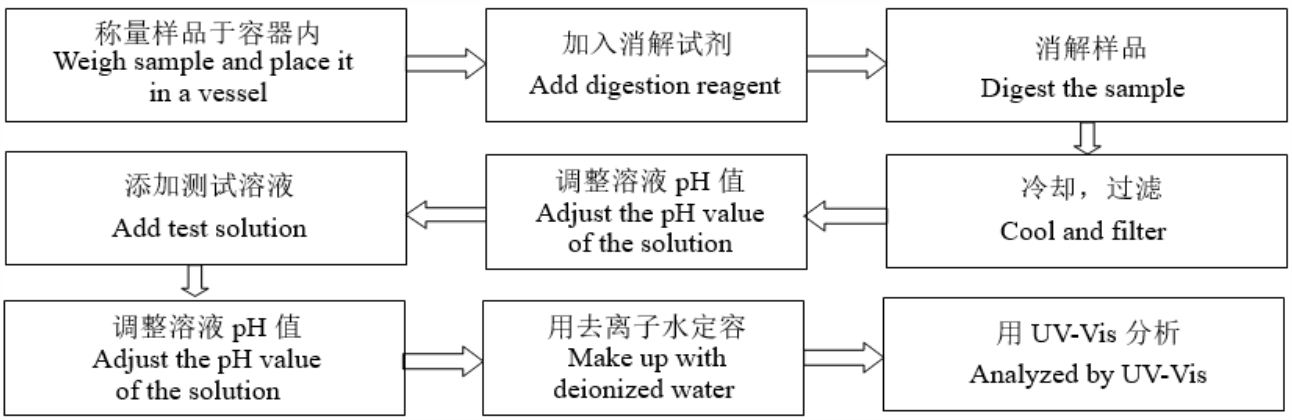

4. 多溴联苯(PBBs)， 多溴二苯醚(PBDEs)

Polybrominated Biphenyls (PBBs), Polybrominated Diphenyl Ethers (PBDEs)

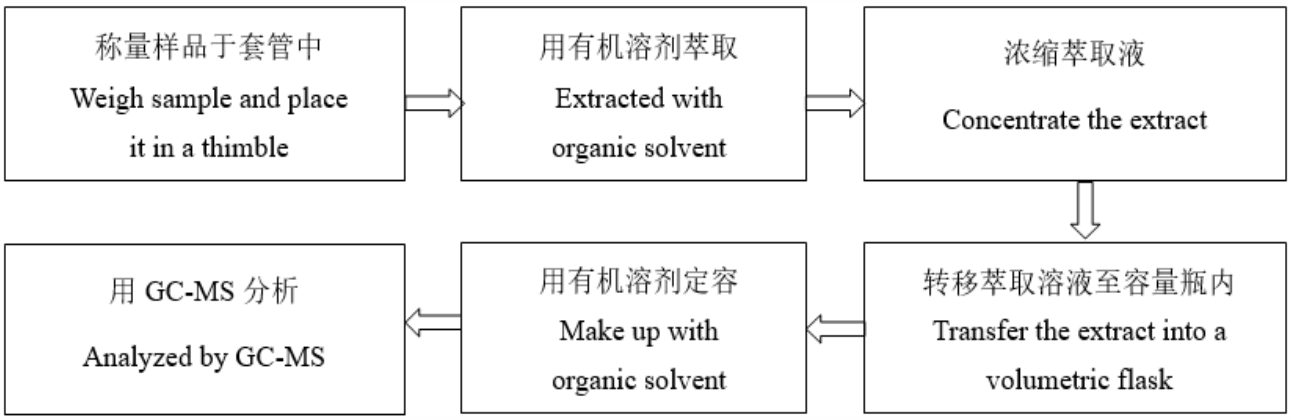

5. 邻苯二甲酸酯(DBP， BBP， DEHP， DIBP)

Phthalates (DBP, BBP, DEHP, DIBP)

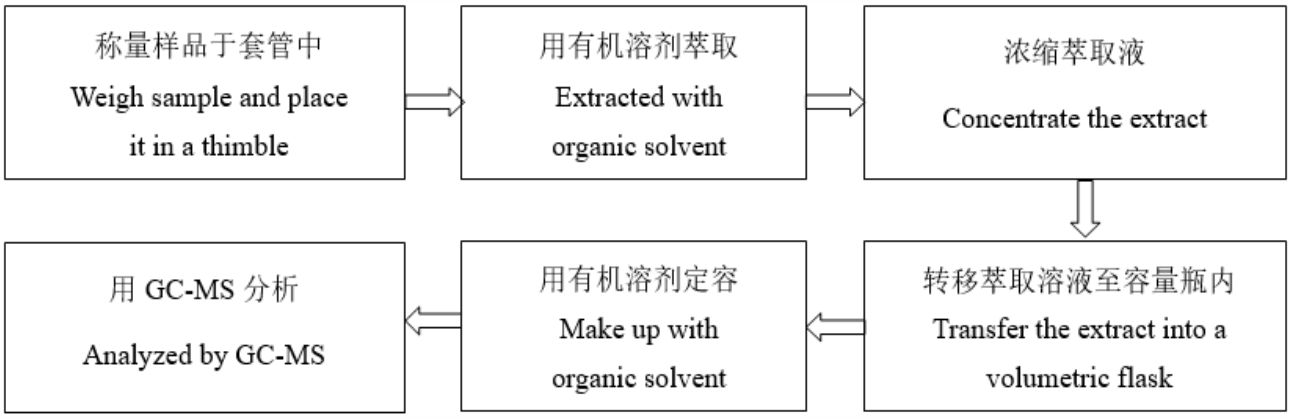

检测报告
Test Report

样品图片
Photo(s) of the sample(s)



声明Statement：

1. 检测报告无批准人签字、“专用章”及报告骑缝章无效；
   This report is considered invalid without approved signature, special seal and the seal on the perforation;
2. 报告抬头公司名称及地址、样品及样品信息由申请者提供，申请者应对其真实性负责，CTI未核实其真实性；
   The Company Name shown on Report and Address, the sample(s) and sample information was/were provided by the applicant who should be responsible for the authenticity which CTI hasn’t verified;
3. 本报告检测结果仅对受测样品负责；
   The result(s) shown in this report refer(s) only to the sample(s) tested;
4. 除非另有说明，报告参照ILAC-G8:09/2019 / CNAS-GL015:2022使用简单接受(w=0)二元判定规则进行符合性判定;
   Unless otherwise stated, the decision rule for conformity reporting is based on Binary Statement for Simple Acceptance Rule (w=0) stated in ILAC-G8:09/2019 / CNAS-GL015:2022;
5. 未经CTI书面同意，不得部分复制本报告；
   Without written approval of CTI, this report can’t be reproduced except in full;
6. 如检测报告中的英文内容与中文内容有差异，以中文为准。
   In case of any discrepancy between the English version and Chinese version of the testing reports (if generated), the Chinese version shall prevail.

报告结束

*** End of report ***

Test Report

No.: CANEC24002065602 **Date:** Feb 04, 2024

Client Name: DONGGUAN LUCKY FLY CONDUCTORCO.LTD

Client Address: QIAO ZI REGION CHANGPING TOWN DONGGUAN CITY GUANGDONG PROVINCE

Sample Name: TINNED COPPER WIRE

The above sample(s) and information were provided by the client.

SGS Job No.: GZP24-002885

Sample Receiving Date: Jan 26, 2024

Testing Period: Jan 26, 2024 ~ Feb 03, 2024

Test Requested: Select test(s) as requested by the client.

Test Method(s): Please refer to next page(s).

Test Result(s): Please refer to next page(s).

Test Requirement	Conclusion
EU RoHS Directive (EU) 2015/863 amending Annex II to Directive 2011/65/EU - Lead, Mercury, Cadmium, Hexavalent chromium, Polybrominated biphenyls (PBB), Polybrominated diphenyl ethers (PBDE), Bis(2-ethylhexyl) phthalate (DEHP), Butyl benzyl phthalate (BBP), Dibutyl phthalate (DBP) and Diisobutyl phthalate (DIBP)	Pass
AfPS GS 2019:01 PAK-Polycyclic Aromatic Hydrocarbons (PAHs)	See Results
Perfluorooctane Sulfonates (PFOS) and its derivatives	See Results
Element(s)	See Results

Signed for and on behalf of
SGS-CSTC Standards Technical Services Co., Ltd. Guangzhou Branch

Arsene Ye

Arsene Ye
Approved Signatory

scan to see the report
8CF560E7

Unless otherwise agreed in writing, this document is issued by the Company subject to its General Conditions of Service printed overleaf, available on request or accessible at https://www.sgs.com/en/Terms-and-Conditions. Attention is drawn to the limitation of liability, indemnification and jurisdiction issues defined therein. Any holder of this document is advised that information contained hereon reflects the Company's findings at the time of its intervention only and within the limits of Client's instructions, if any. The Company's sole responsibility is to its Client and this document does not exonerate parties to a transaction from exercising all their rights and obligations under the transaction documents. This document cannot be reproduced except in full, without prior written approval of the Company. Any unauthorized alteration, forgery or falsification of the content or appearance of this document is unlawful and offenders may be prosecuted to the fullest extent of the law. Unless otherwise stated the results shown in this test report refer only to the sample(s) tested.
Attention: To check the authenticity of testing /inspection report & certificate, please contact us at telephone: (86-755) 8307 1443, or email: CN.Doccheck@sgs.com

SGS-CSTC Standards Technical Services Co., Ltd. Guangzhou Branch Technical Services Technical Laboratory
No.198, Kezhu Road, Science City, Economic & Technological Development Area, Guangzhou, Guangdong, China 510663
中国·广东·广州高新技术产业开发区科学城科珠路198号 邮编: 510663
t (86-20) 82155555 www.sgsgroup.com.cn
t (86-20) 82155555 sgs.china@sgs.com

Test Result(s):

Test Part Description：

SN ID	Sample No.	SGS Sample ID	Description
SN1	A2	CAN24-0020656-0001.C002	Silvery plated metal wire

Remarks:

(1) 1 mg/kg = 1 ppm = 0.0001%
(2) MDL = Method Detection Limit
(3) ND = Not Detected (< MDL)
(4) "-" = Not Regulated

EU RoHS Directive (EU) 2015/863 amending Annex II to Directive 2011/65/EU - Lead, Mercury, Cadmium, Hexavalent chromium, Polybrominated biphenyls (PBB), Polybrominated diphenyl ethers (PBDE), Bis(2-ethylhexyl) phthalate (DEHP), Butyl benzyl phthalate (BBP), Dibutyl phthalate (DBP) and Diisobutyl phthalate (DIBP)

Test Method: With reference to IEC 62321-4:2013+AMD1:2017, IEC 62321-5:2013, IEC 62321-7-1:2015, IEC 62321-6:2015 and IEC62321-8:2017, analysis was performed by ICP-OES/AAS, UV-Vis and GC-MS.

Test Item(s)	Limit	Unit(s)	MDL	A2
Lead (Pb)	1000	mg/kg	2	ND
Mercury (Hg)	1000	mg/kg	2	ND
Cadmium (Cd)	100	mg/kg	2	ND
Hexavalent Chromium (Cr(VI))▼	-	µg/cm²	0.10	ND
Polybrominated biphenyls (PBB)	1000	mg/kg	-	ND
Monobrominated biphenyl (MonoBB)	-	mg/kg	5	ND
Dibrominated biphenyl (DiBB)	-	mg/kg	5	ND
Tribrominated biphenyl (TriBB)	-	mg/kg	5	ND
Tetrabrominated biphenyl (TetraBB)	-	mg/kg	5	ND
Pentabrominated biphenyl (PentaBB)	-	mg/kg	5	ND
Hexabrominated biphenyl (HexaBB)	-	mg/kg	5	ND
Heptabrominated biphenyl (HeptaBB)	-	mg/kg	5	ND
Octabrominated biphenyl (OctaBB)	-	mg/kg	5	ND
Nonabrominated biphenyl (NonaBB)	-	mg/kg	5	ND
Decabrominated biphenyl (DecaBB)	-	mg/kg	5	ND
Polybrominated diphenyl ethers (PBDE)	1000	mg/kg	-	ND
Monobrominated diphenyl ether (MonoBDE)	-	mg/kg	5	ND
Dibrominated diphenyl ether (DiBDE)	-	mg/kg	5	ND
Tribrominated diphenyl ether (TriBDE)	-	mg/kg	5	ND
Tetrabrominated diphenyl ether (TetraBDE)	-	mg/kg	5	ND
Pentabrominated diphenyl ether (PentaBDE)	-	mg/kg	5	ND
Hexabrominated diphenyl ether (HexaBDE)	-	mg/kg	5	ND
Heptabrominated diphenyl ether (HeptaBDE)	-	mg/kg	5	ND

SGS-CSTC Standards Technical Services Co., Ltd. Guangzhou Branch Testing Center, Chemical Laboratory
检验检测专用章 Inspection & Testing Services

Unless otherwise agreed in writing, this document is issued by the Company subject to its General Conditions of Service printed overleaf, available on request or accessible at https://www.sgs.com/en/Terms-and-Conditions. Attention is drawn to the limitation of liability, indemnification and jurisdiction issues defined therein. Any holder of this document is advised that information contained hereon reflects the Company's findings at the time of its intervention only and within the limits of Client's instructions, if any. The Company's sole responsibility is to its Client and this document does not exonerate parties to a transaction from exercising all their rights and obligations under the transaction documents. This document cannot be reproduced except in full, without prior written approval of the Company. Any unauthorized alteration, forgery or falsification of the content or appearance of this document is unlawful and offenders may be prosecuted to the fullest extent of the law. Unless otherwise stated the results shown in this test report refer only to the sample(s) tested.
Attention: To check the authenticity of testing /inspection report & certificate, please contact us at telephone: (86-755) 8307 1443, or email: CN.Doccheck@sgs.com

No.198, Kezhu Road, Science City, Economic & Technological Development Area, Guangzhou, Guangdong, China 510663 t (86–20) 82155555 www.sgsgroup.com.cn
中国·广东·广州高新技术产业开发区科学城科珠路198号 邮编: 510663 t (86–20) 82155555 sgs.china@sgs.com

Test Item(s)	Limit	Unit(s)	MDL	A2
Octabrominated diphenyl ether (OctaBDE)	-	mg/kg	5	ND
Nonabrominated diphenyl ether (NonaBDE)	-	mg/kg	5	ND
Decabrominated diphenyl ether (DecaBDE)	-	mg/kg	5	ND
Bis(2-ethylhexyl) phthalate (DEHP)	1000	mg/kg	50	ND
Butyl benzyl phthalate (BBP)	1000	mg/kg	50	ND
Dibutyl phthalate (DBP)	1000	mg/kg	50	ND
Diisobutyl phthalate (DIBP)	1000	mg/kg	50	ND

Notes:
(1) The maximum permissible limit is quoted from RoHS Directive (EU) 2015/863.
(2) IEC 62321 series is equivalent to EN 62321 series.
(3) ▼ =
a. The sample is positive for Cr(VI) if the Cr(VI)concentration is greater than 0.13 μg/cm^2. The sample coating is considered to contain Cr(VI).
b. The sample is negative for Cr(VI) if Cr(VI) is ND (concentration less than 0.10 μg/cm^2). The coating is considered a non-Cr(VI) based coating.
c. The result between 0.10 μg/cm^2 and 0.13 μg/cm^2 is considered to be inconclusive-unavoidable coating variations may influence the determination.

Information on storage conditions and production date of the tested sample is unavailable and thus Cr(VI) results represent status of the sample at the time of testing.

AfPS GS 2019:01 PAK-Polycyclic Aromatic Hydrocarbons (PAHs)

Test Method: With reference to AfPS GS 2019:01 PAK, analysis was performed by GC-MS.

Test Item(s)	CAS No.	Unit(s)	MDL	A2
Benzo(a)pyrene(BaP)	50-32-8	mg/kg	0.1	ND
Benzo(e)pyrene(BeP)	192-97-2	mg/kg	0.1	ND
Benzo(a)anthracene(BaA)	56-55-3	mg/kg	0.1	ND
Benzo(b)Fluoranthene(BbF)	205-99-2	mg/kg	0.1	ND
Benzo(j)fluoranthene(BjF)	205-82-3	mg/kg	0.1	ND
Benzo(k)Fluoranthene(BkF)	207-08-9	mg/kg	0.1	ND
Chrysene(CHR)	218-01-9	mg/kg	0.1	ND
Dibenzo(a,h)Anthracene(DBA)	53-70-3	mg/kg	0.1	ND
Benzo(g,h,i)perylene(BPE)	191-24-2	mg/kg	0.1	ND
Indeno(1,2,3-c,d)pyrene(IPY)	193-39-5	mg/kg	0.1	ND
Phenanthrene(PHE)	85-01-8	mg/kg	0.1	ND
Pyrene(PYR)	129-00-0	mg/kg	0.1	ND
Anthracene(ANT)	120-12-7	mg/kg	0.1	ND
Fluoranthene(FLT)	206-44-0	mg/kg	0.1	ND
Sum of Phenanthrene(PHE), Pyrene(PYR), Anthracene(ANT), Fluoranthene(FLT)	-	mg/kg	-	ND
Naphthalene(NAP)	91-20-3	mg/kg	0.1	ND
Sum of 15 PAHs	-	mg/kg	-	ND

检验检测专用章 Inspection & Testing Services
SGS-CSTC Standards Technical Services Co., Ltd. Guangzhou Branch Technical Services Co., Ltd. Chemical Laboratory

Unless otherwise agreed in writing, this document is issued by the Company subject to its General Conditions of Service printed overleaf, available on request or accessible at https://www.sgs.com/en/Terms-and-Conditions. Attention is drawn to the limitation of liability, indemnification and jurisdiction issues defined therein. Any holder of this document is advised that information contained hereon reflects the Company's findings at the time of its intervention only and within the limits of Client's instructions, if any. The Company's sole responsibility is to its Client and this document does not exonerate parties to a transaction from exercising all their rights and obligations under the transaction documents. This document cannot be reproduced except in full, without prior written approval of the Company. Any unauthorized alteration, forgery or falsification of the content or appearance of this document is unlawful and offenders may be prosecuted to the fullest extent of the law. Unless otherwise stated the results shown in this test report refer only to the sample(s) tested.
Attention: To check the authenticity of testing /inspection report & certificate, please contact us at telephone: (86-755) 8307 1443, or email: CN.Doccheck@sgs.com

No.198, Kezhu Road, Science City, Economic & Technological Development Area, Guangzhou, Guangdong, China 510663 t (86–20) 82155555 www.sgsgroup.com.cn
中国·广东·广州高新技术产业开发区科学城科珠路198号 邮编: 510663 t (86–20) 82155555 sgs.china@sgs.com

Test Item(s)	CAS No.	Unit(s)	MDL	A2
Material Category	-	-	-	-

Notes:

AfPS（German commission for Product Safety）: PAHs requirements

Parameter	Category 1	Category 2		Category 3	
	Materials intended to be placed in the mouth, or materials coming into long-term contact with skin (more than 30s) during the intended use -in toys according to Directive 2009/48/EC or -for the use by children[a,b] up to 3 years of age.	Materials not covered by category 1, coming into long-term contact (more than 30s) or short-term repetitive contact[c] with skin during the intended or foreseeable use[d].		Materials covered neither by category 1 nor by category 2, coming into short-term contact (up to 30s) with skin during the intended or foreseeable use.	
		a. use by children	b. other consumer products	a. use by children	b. other consumer products
Benzo(a)pyrene (BaP) mg/kg	< 0.2	< 0.2	< 0.5	< 0.5	< 1
Benzo(e)pyrene (BeP) mg/kg	< 0.2	< 0.2	< 0.5	< 0.5	< 1
Benzo(a)anthracene (BaA) mg/kg	< 0.2	< 0.2	< 0.5	< 0.5	< 1
Benzo(b)fluoranthene (BbF) mg/kg	< 0.2	< 0.2	< 0.5	< 0.5	< 1
Benzo(j)fluoranthene (BjF) mg/kg	< 0.2	< 0.2	< 0.5	< 0.5	< 1
Benzo(k)fluoranthene (BkF)mg/kg	< 0.2	< 0.2	< 0.5	< 0.5	< 1
Chrysene (CHR) mg/kg	< 0.2	< 0.2	< 0.5	< 0.5	< 1
Dibenzo(a,h)anthracene (DBA) mg/kg	< 0.2	< 0.2	< 0.5	< 0.5	< 1
Benzo(g,h,i)perylene (BPE) mg/kg	< 0.2	< 0.2	< 0.5	< 0.5	< 1
Indeno(1,2,3-cd)pyrene (IPY) mg/kg	< 0.2	< 0.2	< 0.5	< 0.5	< 1

SGS-CSTC Standards Technical Services Co., Ltd. Guangzhou Branch Testing Center Chemical Laboratory
检验检测专用章 Inspection & Testing Services

Unless otherwise agreed in writing, this document is issued by the Company subject to its General Conditions of Service printed overleaf, available on request or accessible at https://www.sgs.com/en/Terms-and-Conditions. Attention is drawn to the limitation of liability, indemnification and jurisdiction issues defined therein. Any holder of this document is advised that information contained hereon reflects the Company's findings at the time of its intervention only and within the limits of Client's instructions, if any. The Company's sole responsibility is to its Client and this document does not exonerate parties to a transaction from exercising all their rights and obligations under the transaction documents. This document cannot be reproduced except in full, without prior written approval of the Company. Any unauthorized alteration, forgery or falsification of the content or appearance of this document is unlawful and offenders may be prosecuted to the fullest extent of the law. Unless otherwise stated the results shown in this test report refer only to the sample(s) tested.
Attention: To check the authenticity of testing /inspection report & certificate, please contact us at telephone: (86-755) 8307 1443, or email: CN.Doccheck@sgs.com

No.198, Kezhu Road, Science City, Economic & Technological Development Area, Guangzhou, Guangdong, China 510663 t (86–20) 82155555 www.sgsgroup.com.cn
中国・广东・广州高新技术产业开发区科学城科珠路198号 邮编: 510663 t (86–20) 82155555 sgs.china@sgs.com

Member of the SGS Group (SGS SA)

Phenanthrene (PHE), pyrene (PYR), anthracene (ANT), fluoranthene (FLT), mg/kg	< 1 Sum	< 5 Sum	< 10 Sum	< 20 Sum	< 50 Sum
Naphthalene (NAP) mg/kg	< 1	< 2		< 10	
Sum of 15 PAHs	<1	< 5	< 10	< 20	< 50

Notes:
[a] A "Child" is legally defined as a person before reaching the age of 14 years.
[b] Use by children includes both active and passive contact by children.
[c] Definition "short-term repetitive contact" taken from REACH Annex XVII entry 50 amendment (Regulation (EC) No.1272/2013)
[d] According to the definition of the German Product Safety Act (ProdSG) (chapter 1 Article 2 No. 28) "foreseeable use" shall mean the use of a product in a manner that the person placing it on the market, has not intended, but which could be reasonably foreseeable.

Remark:
The German committee on Product Safety (AfPS) published a new PAHs document (AfPS GS 2019:01 PAK) on April 10, 2020, which will be binding for the issue of GS mark certificate from July 1, 2020.

Perfluorooctane Sulfonates (PFOS) and its derivatives

Test Method: Modified CEN/TS 15968:2010, analysis was performed by LC-MS or LC-MS/MS.

Test Item(s)	CAS No.	Unit(s)	MDL	A2
PFOS and its derivatives	-	mg/kg	-	ND
Perfluorooctane Sulfonates (PFOS) and its salts*	1763-23-1	mg/kg	0.010	ND
N-ethylperfluoro-1-octanesulfonamide (N-EtFOSA)	4151-50-2	mg/kg	0.010	ND
N-methylperfluoro-1-octanesulfonamide (N-MeFOSA)	31506-32-8	mg/kg	0.010	ND
2-(N-ethylperfluoro-1-octanesulfonamido) -ethanol (N-EtFOSE)	1691-99-2	mg/kg	0.010	ND
2-(N-methylperfluoro-1-octanesulfonamido) -ethanol (N-MeFOSE)	24448-09-7	mg/kg	0.010	ND
Perfluorooctane Sulfonamide (PFOSA)	754-91-6	mg/kg	0.010	ND

Notes:
(1) Perfluorooctane sulfonates (PFOS) and its salts* including PFOS (CAS No. 1763-23-1), POSF(CAS No. 307-35-7), PFOS-K (CAS No. 2795-39-3), PFOS-NH_4 (CAS No. 29081-56-9), PFOS-$N(C_{10}H_{21})_2(CH_3)_2$ (CAS No. 251099-16-8), PFOS-$NH_2(C_2H_4OH)_2$ (CAS No. 70225-14-8), PFOS-Li (CAS No. 29457-72-5), PFOS-$N(C_2H_5)_4$ (CAS No. 56773-42-3) and PFOS-Na (CAS No. 4021-47-0). The result of PFOS is used to represent PFOS and its salts.

检验检测专用章 Inspection & Testing Services
SGS-CSTC Standards Technical Services Co., Ltd. Guangzhou Branch Testing Center Chemical Laboratory

Unless otherwise agreed in writing, this document is issued by the Company subject to its General Conditions of Service printed overleaf, available on request or accessible at https://www.sgs.com/en/Terms-and-Conditions. Attention is drawn to the limitation of liability, indemnification and jurisdiction issues defined therein. Any holder of this document is advised that information contained hereon reflects the Company's findings at the time of its intervention only and within the limits of Client's instructions, if any. The Company's sole responsibility is to its Client and this document does not exonerate parties to a transaction from exercising all their rights and obligations under the transaction documents. This document cannot be reproduced except in full, without prior written approval of the Company. Any unauthorized alteration, forgery or falsification of the content or appearance of this document is unlawful and offenders may be prosecuted to the fullest extent of the law. Unless otherwise stated the results shown in this test report refer only to the sample(s) tested.
Attention: To check the authenticity of testing /inspection report & certificate, please contact us at telephone: (86-755) 8307 1443, or email: CN.Doccheck@sgs.com

No.198, Kezhu Road, Science City, Economic & Technological Development Area, Guangzhou, Guangdong, China 510663 t (86–20) 82155555 www.sgsgroup.com.cn
中国·广东·广州高新技术产业开发区科学城科珠路198号 邮编: 510663 t (86–20) 82155555 sgs.china@sgs.com

Element(s)

Test Method: With reference to US EPA 3050B:1996, analysis was performed by ICP-OES/AAS.

Test Item(s)	Unit(s)	MDL	A2
Beryllium(Be)	mg/kg	5	ND

Unless otherwise stated, the decision rule for conformity reporting is based on Binary Statement for Simple Acceptance Rule (*w*=0) stated in ILAC-G8:09/2019.

SGS-CSTC Standards Technical Services Co., Ltd. Guangzhou Branch Testing Center / Chemical Laboratory.

Unless otherwise agreed in writing, this document is issued by the Company subject to its General Conditions of Service printed overleaf, available on request or accessible at https://www.sgs.com/en/Terms-and-Conditions. Attention is drawn to the limitation of liability, indemnification and jurisdiction issues defined therein. Any holder of this document is advised that information contained hereon reflects the Company's findings at the time of its intervention only and within the limits of Client's instructions, if any. The Company's sole responsibility is to its Client and this document does not exonerate parties to a transaction from exercising all their rights and obligations under the transaction documents. This document cannot be reproduced except in full, without prior written approval of the Company. Any unauthorized alteration, forgery or falsification of the content or appearance of this document is unlawful and offenders may be prosecuted to the fullest extent of the law. Unless otherwise stated the results shown in this test report refer only to the sample(s) tested.
Attention: To check the authenticity of testing /inspection report & certificate, please contact us at telephone: (86-755) 8307 1443, or email: CN.Doccheck@sgs.com

No.198, Kezhu Road, Science City, Economic & Technological Development Area, Guangzhou, Guangdong, China 510663 t (86–20) 82155555 www.sgsgroup.com.cn
中国·广东·广州高新技术产业开发区科学城科珠路198号 邮编: 510663 t (86–20) 82155555 sgs.china@sgs.com

Member of the SGS Group (SGS SA)

ATTACHMENTS

Elements Testing Flow Chart

These samples were dissolved totally by pre-conditioning method according to below flow chart.

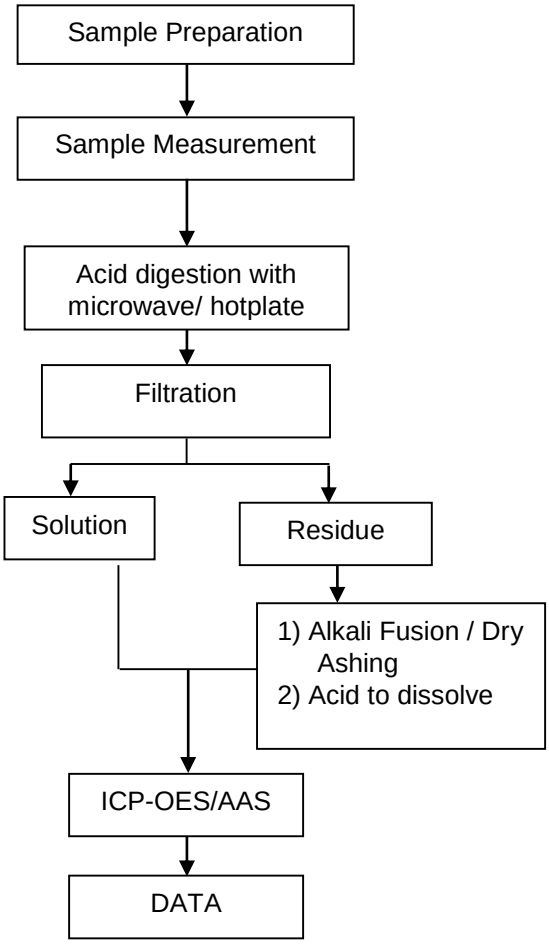

Unless otherwise agreed in writing, this document is issued by the Company subject to its General Conditions of Service printed overleaf, available on request or accessible at https://www.sgs.com/en/Terms-and-Conditions. Attention is drawn to the limitation of liability, indemnification and jurisdiction issues defined therein. Any holder of this document is advised that information contained hereon reflects the Company's findings at the time of its intervention only and within the limits of Client's instructions, if any. The Company's sole responsibility is to its Client and this document does not exonerate parties to a transaction from exercising all their rights and obligations under the transaction documents. This document cannot be reproduced except in full, without prior written approval of the Company. Any unauthorized alteration, forgery or falsification of the content or appearance of this document is unlawful and offenders may be prosecuted to the fullest extent of the law. Unless otherwise stated the results shown in this test report refer only to the sample(s) tested.
Attention: To check the authenticity of testing /inspection report & certificate, please contact us at telephone: (86-755) 8307 1443, or email: CN.Doccheck@sgs.com

SGS-CSTC Standards Technical Services Co., Ltd. Guangzhou Branch Testing Center / Chemical Laboratory
No.198, Kezhu Road, Science City, Economic & Technological Development Area, Guangzhou, Guangdong, China 510663 t (86–20) 82155555 www.sgsgroup.com.cn
中国·广东·广州高新技术产业开发区科学城科珠路198号 邮编: 510663 t (86–20) 82155555 sgs.china@sgs.com
Member of the SGS Group (SGS SA)

ATTACHMENTS

Hexavalent Chromium (Cr(VI)) Testing Flow Chart

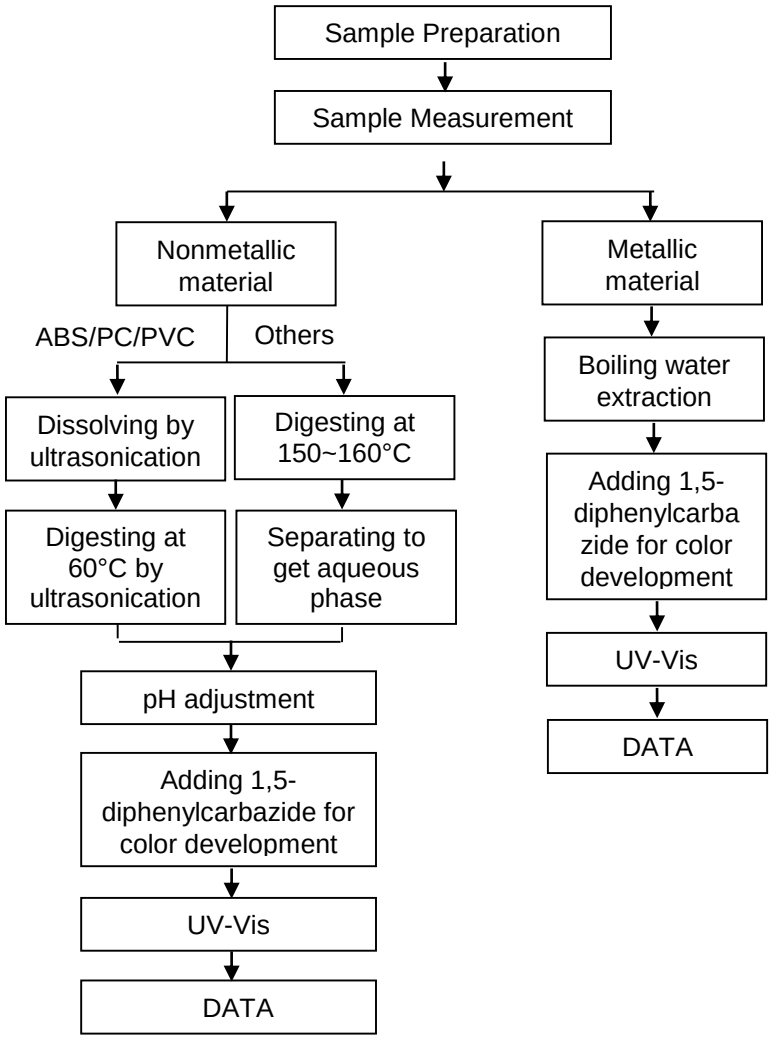

Unless otherwise agreed in writing, this document is issued by the Company subject to its General Conditions of Service printed overleaf, available on request or accessible at https://www.sgs.com/en/Terms-and-Conditions. Attention is drawn to the limitation of liability, indemnification and jurisdiction issues defined therein. Any holder of this document is advised that information contained hereon reflects the Company's findings at the time of its intervention only and within the limits of Client's instructions, if any. The Company's sole responsibility is to its Client and this document does not exonerate parties to a transaction from exercising all their rights and obligations under the transaction documents. This document cannot be reproduced except in full, without prior written approval of the Company. Any unauthorized alteration, forgery or falsification of the content or appearance of this document is unlawful and offenders may be prosecuted to the fullest extent of the law. Unless otherwise stated the results shown in this test report refer only to the sample(s) tested.
Attention: To check the authenticity of testing /inspection report & certificate, please contact us at telephone: (86-755) 8307 1443, or email: CN.Doccheck@sgs.com

SGS-CSTC Standards Technical Services Co., Ltd. Guangzhou Branch Testing Center
No.198, Kezhu Road, Science City, Economic & Technological Development Area, Guangzhou, Guangdong, China 510663
中国·广东·广州高新技术产业开发区科学城科珠路198号 邮编: 510663
t (86-20) 82155555 www.sgsgroup.com.cn
t (86-20) 82155555 sgs.china@sgs.com

ATTACHMENTS

PBB/PBDE Testing Flow Chart

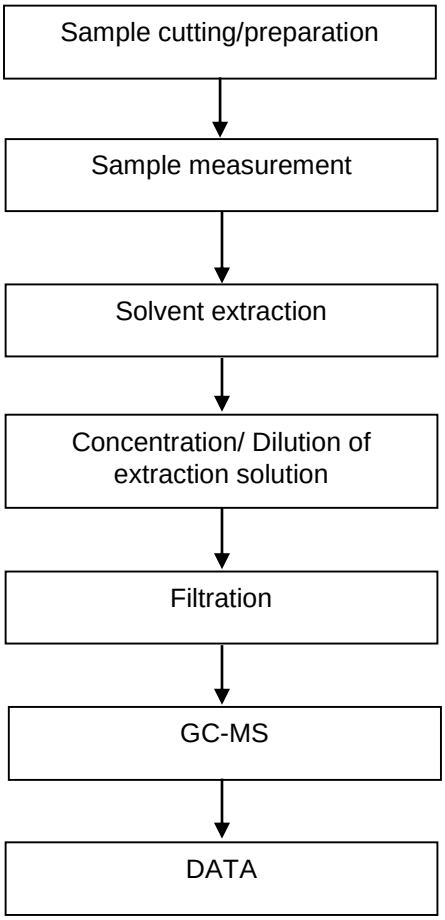

Unless otherwise agreed in writing, this document is issued by the Company subject to its General Conditions of Service printed overleaf, available on request or accessible at https://www.sgs.com/en/Terms-and-Conditions. Attention is drawn to the limitation of liability, indemnification and jurisdiction issues defined therein. Any holder of this document is advised that information contained hereon reflects the Company's findings at the time of its intervention only and within the limits of Client's instructions, if any. The Company's sole responsibility is to its Client and this document does not exonerate parties to a transaction from exercising all their rights and obligations under the transaction documents. This document cannot be reproduced except in full, without prior written approval of the Company. Any unauthorized alteration, forgery or falsification of the content or appearance of this document is unlawful and offenders may be prosecuted to the fullest extent of the law. Unless otherwise stated the results shown in this test report refer only to the sample(s) tested.
Attention: To check the authenticity of testing /inspection report & certificate, please contact us at telephone: (86-755) 8307 1443, or email: CN.Doccheck@sgs.com

SGS-CSTC Standards Technical Services Co., Ltd. Guangzhou Branch Testing Center / Chemical Laboratory
No.198, Kezhu Road, Science City, Economic & Technological Development Area, Guangzhou, Guangdong, China 510663 t (86–20) 82155555 www.sgsgroup.com.cn
中国·广东·广州高新技术产业开发区科学城科珠路198号 邮编: 510663 t (86–20) 82155555 sgs.china@sgs.com

ATTACHMENTS

Phthalates Testing Flow Chart

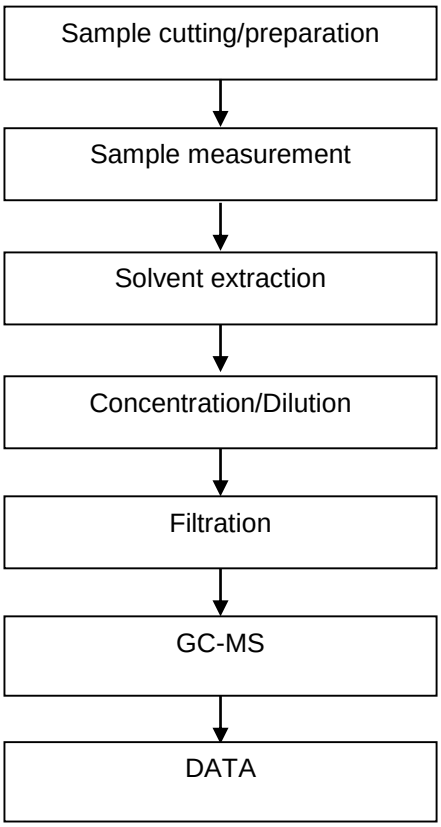

Unless otherwise agreed in writing, this document is issued by the Company subject to its General Conditions of Service printed overleaf, available on request or accessible at https://www.sgs.com/en/Terms-and-Conditions. Attention is drawn to the limitation of liability, indemnification and jurisdiction issues defined therein. Any holder of this document is advised that information contained hereon reflects the Company's findings at the time of its intervention only and within the limits of Client's instructions, if any. The Company's sole responsibility is to its Client and this document does not exonerate parties to a transaction from exercising all their rights and obligations under the transaction documents. This document cannot be reproduced except in full, without prior written approval of the Company. Any unauthorized alteration, forgery or falsification of the content or appearance of this document is unlawful and offenders may be prosecuted to the fullest extent of the law. Unless otherwise stated the results shown in this test report refer only to the sample(s) tested.
Attention: To check the authenticity of testing /inspection report & certificate, please contact us at telephone: (86-755) 8307 1443, or email: CN.Doccheck@sgs.com

SGS-CSTC Standards Technical Services Co., Ltd. Guangzhou Branch Testing Center / Chemical Laboratory
No.198, Kezhu Road, Science City, Economic & Technological Development Area, Guangzhou, Guangdong, China 510663 t (86–20) 82155555 www.sgsgroup.com.cn
中国·广东·广州高新技术产业开发区科学城科珠路198号 邮编: 510663 t (86–20) 82155555 sgs.china@sgs.com
Member of the SGS Group (SGS SA)

ATTACHMENTS

PAHs Testing Flow Chart

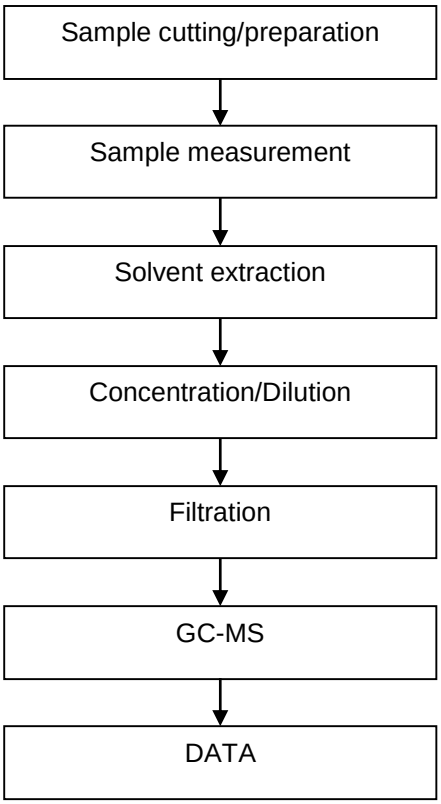

Unless otherwise agreed in writing, this document is issued by the Company subject to its General Conditions of Service printed overleaf, available on request or accessible at https://www.sgs.com/en/Terms-and-Conditions. Attention is drawn to the limitation of liability, indemnification and jurisdiction issues defined therein. Any holder of this document is advised that information contained hereon reflects the Company's findings at the time of its intervention only and within the limits of Client's instructions, if any. The Company's sole responsibility is to its Client and this document does not exonerate parties to a transaction from exercising all their rights and obligations under the transaction documents. This document cannot be reproduced except in full, without prior written approval of the Company. Any unauthorized alteration, forgery or falsification of the content or appearance of this document is unlawful and offenders may be prosecuted to the fullest extent of the law. Unless otherwise stated the results shown in this test report refer only to the sample(s) tested.
Attention: To check the authenticity of testing /inspection report & certificate, please contact us at telephone: (86-755) 8307 1443, or email: CN.Doccheck@sgs.com

SGS-CSTC Standards Technical Services Co., Ltd. Guangzhou Branch Testing Center
No.198, Kezhu Road, Science City, Economic & Technological Development Area, Guangzhou, Guangdong, China 510663 t (86–20) 82155555 www.sgsgroup.com.cn
中国·广东·广州高新技术产业开发区科学城科珠路198号 邮编: 510663 t (86–20) 82155555 sgs.china@sgs.com

ATTACHMENTS

PFASs/ PFOS/PFOA Testing Flow Chart

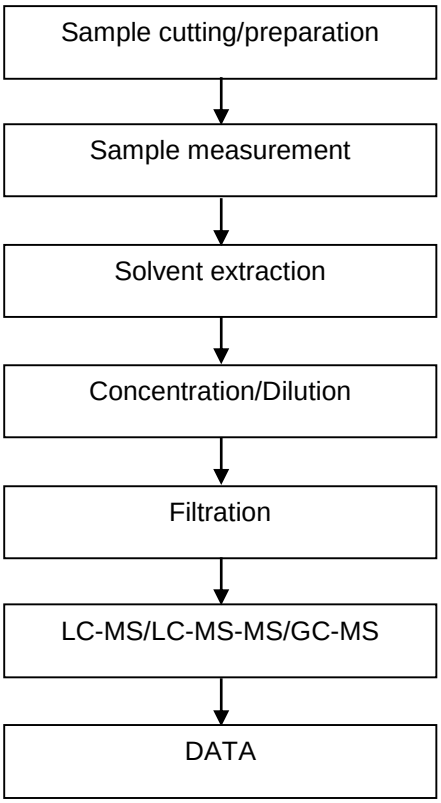

Unless otherwise agreed in writing, this document is issued by the Company subject to its General Conditions of Service printed overleaf, available on request or accessible at https://www.sgs.com/en/Terms-and-Conditions. Attention is drawn to the limitation of liability, indemnification and jurisdiction issues defined therein. Any holder of this document is advised that information contained hereon reflects the Company's findings at the time of its intervention only and within the limits of Client's instructions, if any. The Company's sole responsibility is to its Client and this document does not exonerate parties to a transaction from exercising all their rights and obligations under the transaction documents. This document cannot be reproduced except in full, without prior written approval of the Company. Any unauthorized alteration, forgery or falsification of the content or appearance of this document is unlawful and offenders may be prosecuted to the fullest extent of the law. Unless otherwise stated the results shown in this test report refer only to the sample(s) tested.
Attention: To check the authenticity of testing /inspection report & certificate, please contact us at telephone: (86-755) 8307 1443, or email: CN.Doccheck@sgs.com

SGS-CSTC Standards Technical Services Co., Ltd. Guangzhou Branch Testing Center / Chemical Laboratory
No.198, Kezhu Road, Science City, Economic & Technological Development Area, Guangzhou, Guangdong, China 510663 t (86–20) 82155555 www.sgsgroup.com.cn
中国·广东·广州高新技术产业开发区科学城科珠路198号 邮编: 510663 t (86–20) 82155555 sgs.china@sgs.com
Member of the SGS Group (SGS SA)

ATTACHMENTS

Elements Testing Flow Chart

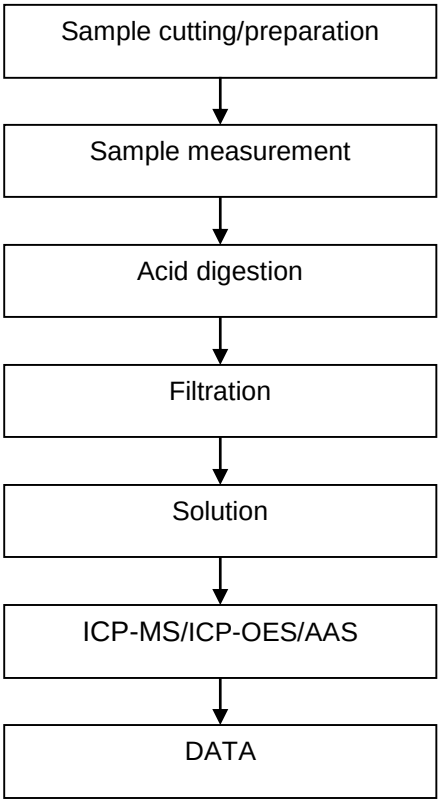

Unless otherwise agreed in writing, this document is issued by the Company subject to its General Conditions of Service printed overleaf, available on request or accessible at https://www.sgs.com/en/Terms-and-Conditions. Attention is drawn to the limitation of liability, indemnification and jurisdiction issues defined therein. Any holder of this document is advised that information contained hereon reflects the Company's findings at the time of its intervention only and within the limits of Client's instructions, if any. The Company's sole responsibility is to its Client and this document does not exonerate parties to a transaction from exercising all their rights and obligations under the transaction documents. This document cannot be reproduced except in full, without prior written approval of the Company. Any unauthorized alteration, forgery or falsification of the content or appearance of this document is unlawful and offenders may be prosecuted to the fullest extent of the law. Unless otherwise stated the results shown in this test report refer only to the sample(s) tested.
Attention: To check the authenticity of testing /inspection report & certificate, please contact us at telephone: (86-755) 8307 1443, or email: CN.Doccheck@sgs.com

SGS-CSTC Standards Technical Services Co., Ltd. Guangzhou Branch Testing Center / Chemical Laboratory
No.198, Kezhu Road, Science City, Economic & Technological Development Area, Guangzhou, Guangdong, China 510663 t (86–20) 82155555 www.sgsgroup.com.cn
中国·广东·广州高新技术产业开发区科学城科珠路198号 邮编: 510663 t (86–20) 82155555 sgs.china@sgs.com
Member of the SGS Group (SGS SA)

Sample Photo:

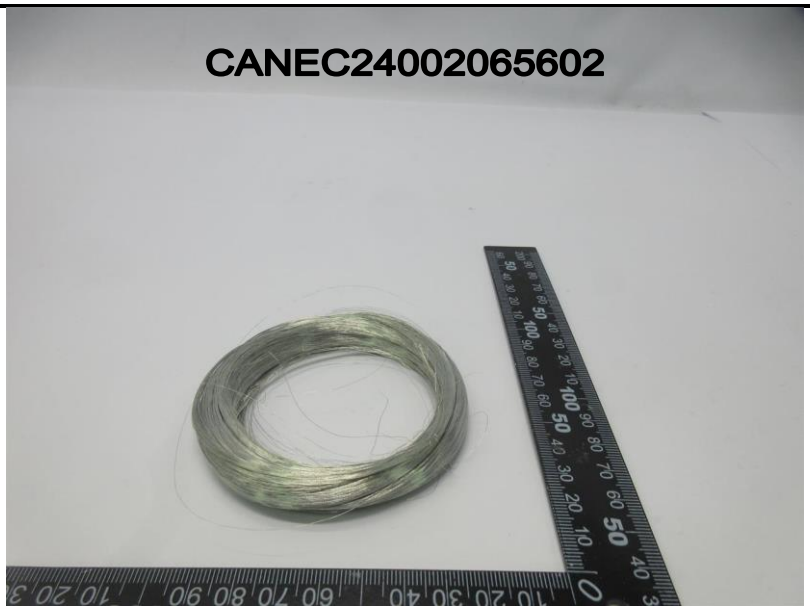

CAN24-0020656-0001.C002

SGS authenticate the photo on original report only

*** End of Report ***

Unless otherwise agreed in writing, this document is issued by the Company subject to its General Conditions of Service printed overleaf, available on request or accessible at https://www.sgs.com/en/Terms-and-Conditions. Attention is drawn to the limitation of liability, indemnification and jurisdiction issues defined therein. Any holder of this document is advised that information contained hereon reflects the Company's findings at the time of its intervention only and within the limits of Client's instructions, if any. The Company's sole responsibility is to its Client and this document does not exonerate parties to a transaction from exercising all their rights and obligations under the transaction documents. This document cannot be reproduced except in full, without prior written approval of the Company. Any unauthorized alteration, forgery or falsification of the content or appearance of this document is unlawful and offenders may be prosecuted to the fullest extent of the law. Unless otherwise stated the results shown in this test report refer only to the sample(s) tested.
Attention: To check the authenticity of testing /inspection report & certificate, please contact us at telephone: (86-755) 8307 1443, or email: CN.Doccheck@sgs.com

SGS-CSTC Standards Technical Services Co., Ltd. Guangzhou Branch Testing Center
No.198, Kezhu Road, Science City, Economic & Technological Development Area, Guangzhou, Guangdong, China 510663 t (86–20) 82155555 www.sgsgroup.com.cn
中国·广东·广州高新技术产业开发区科学城科珠路198号 邮编: 510663 t (86–20) 82155555 sgs.china@sgs.com