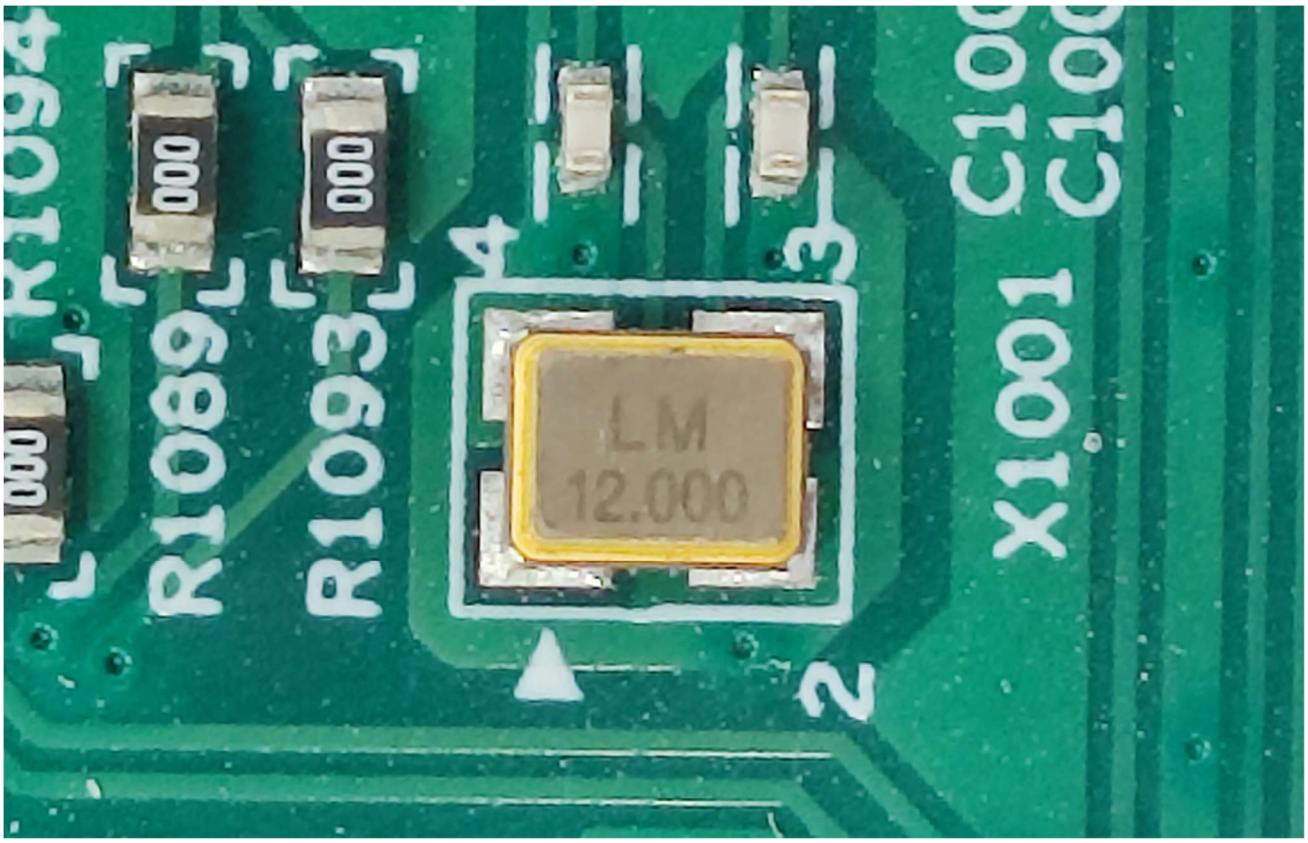

設計驗證
工程課
2024-12-31
發行

SPECIFICATION FOR APPROVAL
规格书

NO 编号： LM20241209-01

CUSTOMER 客 户： DIVA

PRODUCT 产 品： CRYSTAL RESONATOR

P/N 料 号： 3ZCR120A48Y(Z0537)

MODEL NO 型 号： SMD3225-12.000000-12-30-50E

PREPARED 编 制： 郑兴华 CHECKED 审 核： 张永刚

APPROVED 批 准： 張俊鹏 D A T E 日 期： 2022-12-09

CUSTOMER 客户确认意见：	
CHECKED 审 核：	設計驗證 工程課 2024-12-31 發行
APPROVED 批 准：	
D A T E 日 期：	

GENERAL SPECIFICATIONS（电气特性）:

1. Holder type: （型号）	SMD3225	
2.Normal Frequency: （标称频率）	12.000000MHz	
3.Oscillation Mode: （振动模式）	AT-Fundamental	
4.Load Capacitance(CL): （负载电容）	12 PF	
5.Frequency Tolerance 25±3℃: （频率偏差 25±3℃）	± 30 PPM	
6.Effective Series Resistance: （等效电阻）	≤ 80Ω	
7.DLD2 （不同功率下之最大与最小阻抗差值）	≤ 24Ω	0.01 uW~100 uW 10 steps
8.RLD2 （不同功率下之最大阻抗值）	≤ 80Ω	0.01 uW~100 uW 10 steps
9.FDLD (不同功率下之最大与最小 FR 差值)	≤ 8 PPM	0.01 uW~100 uW 10 steps
10.Shunt Capacitance(C0): （静态电容）	≤7 PF	
11. Typical drive level: （驱动功率）	100uW TYP.	
12.Operation Temperature Range: （工作温度范围）	-40℃ to +85℃	
13.Stability Over Temperature Range: （工作温度频率偏差）	±50 PPM at -40℃ to+85℃	
14.Insulation Resistance:（绝缘阻抗）	≥500 MΩ	.at DC 100V
15.Aging:（老化率）	±5 PPM/Year	
16.Storage Temperature:（存储温度）	-55℃ to +125℃	
17.Test circuit（测试仪器）	S&A 250B Pi-Network Crystal Measurement System	
Remark（备注）:		

DIMENSIONS SPECIFICATIONS（外形尺寸）

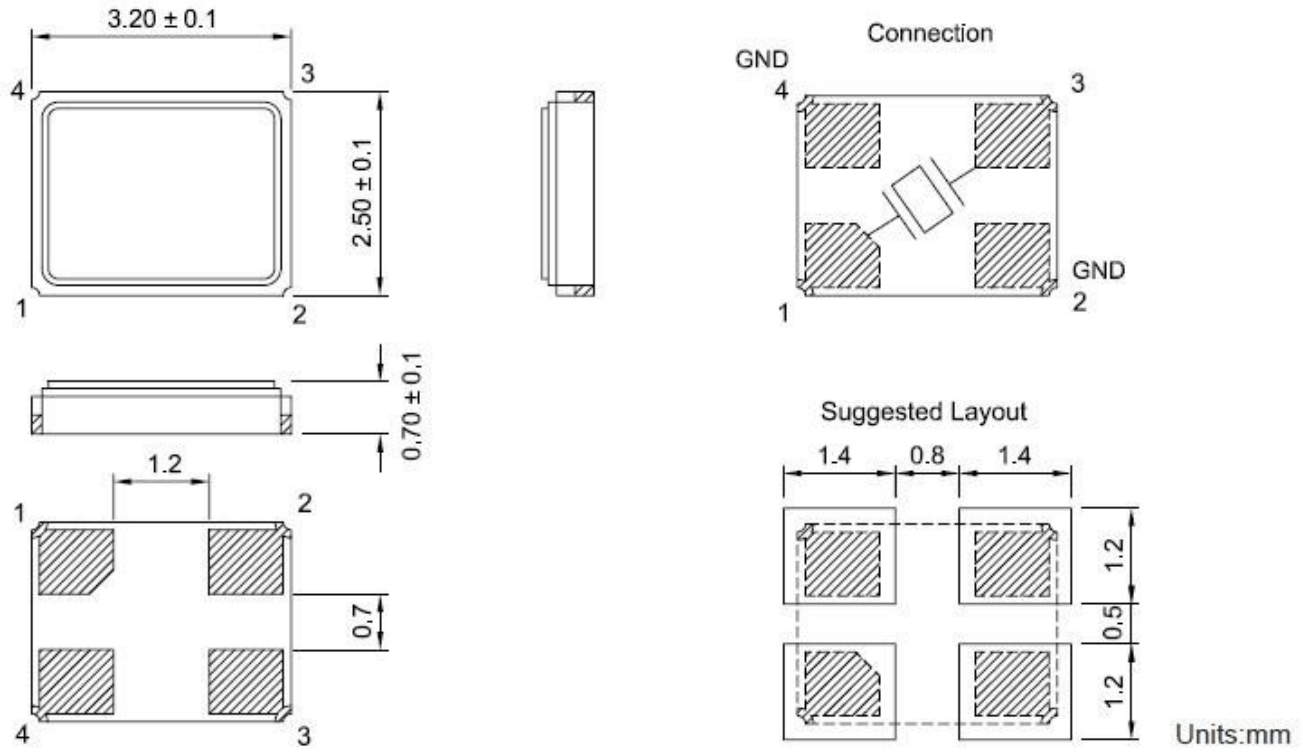

Recommended Soldering Pattern（引脚焊盘位置）

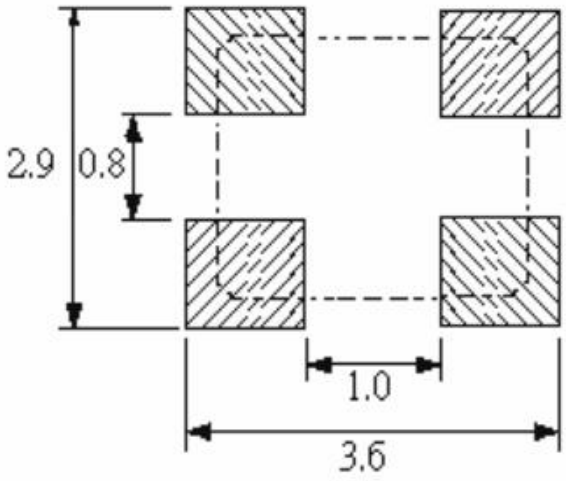

LASER MARK（激光印字）



PACKING（包装）

Shear strength between cover and carrier tape should be 30-100g.
Carrier tape should be folded over three times with no break at all.

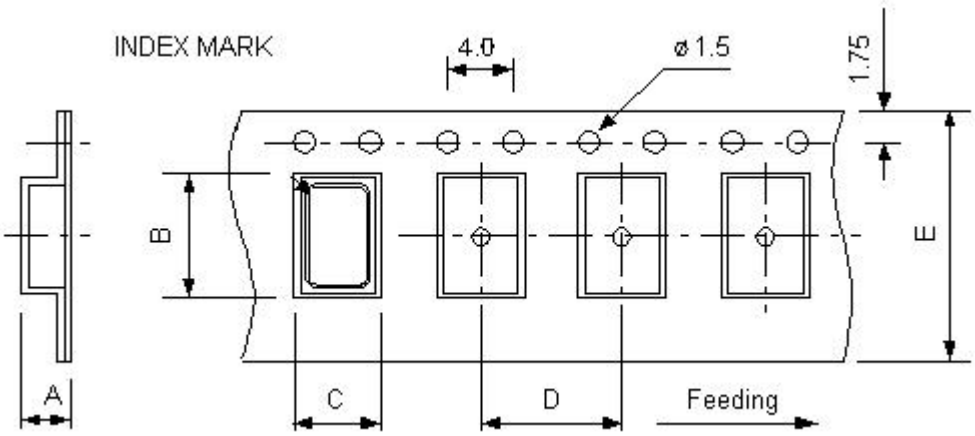

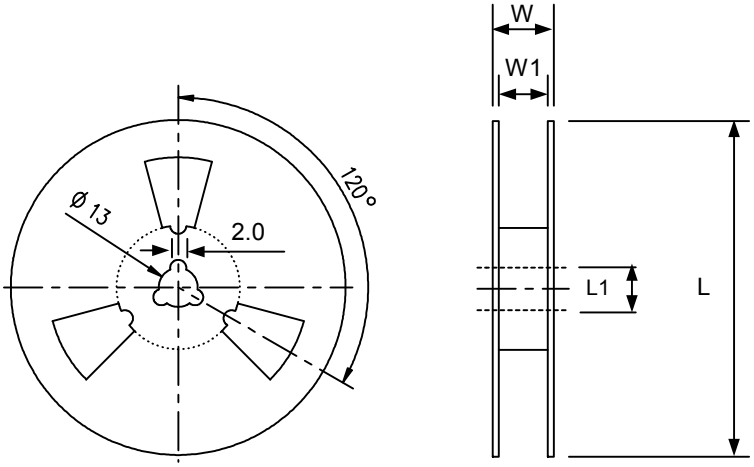

		A	B	C	D	E	L	L1	W	W1
DIMENSIONS	7050	2.15	7.9	5.4	8	16	180	13	21.5	17.5
	6035	1.5	6.4	3.9	8	12	180	13	15.4	13
	5032	1.5	5.5	3.6	8	12	180	13	15.4	13
	4025	1.5	4.4	2.8	8	12	180	13	15.4	13
	3225	1.4	3.4	2.7	4	8	180	13	11.5	8

Unit : mm
Standard Reel Quantity is 3,000 pcs per reel.

RELIABILITY SPECIFICATIONS 可靠性测试标准

NO.	ITEMS 项目	CONDITIONS 条件	SPECIFICATION 规格
1	Lead Bend 端子强度	a)Pulling：According to experiment of IEC 68-2-21 Ua1 experiment,pull 10N. a)拉力：按IEC 68-2-21中试验Ua1进行，拉力10N。 b)Bending:According to experiment of IEC 68-2-21 method Ub.Add the burthen of 5N to lead,and 2.5±0.5mm refer to the base for 3 times . b)弯曲强度：按IEC 68-2-21中试验Ub进行，负荷应限制在距晶体元件本体2.5±0.5mm处开始弯曲，所加质量负荷为5N，弯曲次数为3次。	B
2	Solderability 可焊性	According to experiment of IEC 68-2-20 Ta method 1 ,Solder temperature is 235℃. 按IEC 68-2-20中试验Ta的方法1进行， 焊接温度235℃。	C
3	Solder heat resistance 耐焊接热	According to experiment of IEC 68-2-20 method Tb 1A:solder slit method.Solder temperature:260±5℃,dip time 5±1s。 按IEC 68-2-20试验Tb方法1A：焊锡槽方法进行。 焊接温度：260±5℃，浸入时间：5±1秒。	A
4	Vibration 耐振性	According to experiment of 68-2-6 method Fc ,The entire frequency range,from 10Hz to 55Hz and return to 10Hz,and shall be transferred in 1 min.Amplitude(total excursion):1.5mm Durtion=2 hours for each of the main axes(x,y,z). 按IEC 68-2-6试验Fc进行，振动频率在1分钟内从10～55Hz，再回到10Hz，振幅1.5mm，X、Y、Z三个方向各2小时。	A
5	Shock 耐冲击性	According to experiment of IEC 68-2-27 method Ea,the biggest acceleration :981m/s2(100g),work time :6ms,and 6 surfaces , and 3 directions for each surface,and shall be Shocked 18 times in total. 按IEC 68-2-27试验Ea进行，最大加速度：981m/s2（100g),作用时间：6ms，6面，每面三个方向，共18次。	AB
6	Cold 耐寒性	According to experiment of IEC 68-2-1 method Aa, The quartz crystal unit should be stored at a temperature -40±3℃ for 2 hours,and then it shall be subjected to standard atmospheric conditions for 1 hour,after which measurement shall be made. 按IEC 68-2-1试验Aa进行，晶体在温度-40±3℃中放置2小时后，在常温常湿状态下放置1小时后测试。	A
7	Dry Heat 干 热	According to experiment of IEC 68-2-2 Ba,quartz crystal unit should be stored at a temperature 85±2℃ for 16 hours.Then it shall be subjected to standard atmospheric conditions for 1 hour ,after which measurement shall be made. 按IEC 68-2-2试验Ba进行，晶体在温度85±2℃中放置16小时后，在常温常湿状态下放置1小时后测试。	A
8	High heat and high humidity 稳态湿热	According to experiment of IEC 68-2-3 method Ca,quartz crystal unit shoud be stored at a temperature 40±2℃ and at humidity 90~95% for 96 hours.Then it shall be subjected to standard atmospheric conditions for 1 hour. 按IEC 68-2-3试验Ca进行，晶体在温度40±2℃，湿度90~95%中放置96小时后，在常温常湿状态下放置1小时后测试。	A
9	Temperature Cycling 温度变化	According to experiment of IEC 68-2-14 method Na,quartz crystal unit shall be made 5 temperature cycles ,and then it shall be subjetced to standard atmospheric conditions for 1 hour. 按IEC 68-2-14试验Na进行，晶体按下表做5个温度循环后，在常温常湿状态下放置1小时后测试。	A

	TEMPERATURE 温度	STORE TIME 放置时间
1	-40±3℃	30min
2	Normal Temp(常温)	30sec
3	100±3℃	30min
4	Normal Temp(常温)	30sec

10	Drop 跌落	According to experiment of IEC 68-2-32 method Ed,quartz crystal unit shall be dropped from 75cm height on 3cm hard board for 3 times. 按IEC 68-2-32试验Ed进行，晶体从75厘米高度自由下落至3厘米硬木板，重复3次。	AB
11	Reflow 回流焊	Reflow soldering cure see the chart. 回流焊曲线见下图。 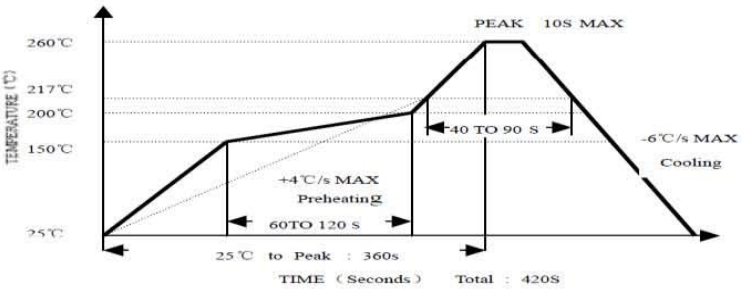	A
12	Leakage 气密性	Alcohol press method:quartz crystal unit shall be immerged in the can,and pressed by0.5kg press for 30min;Then put away press ,and dry it.Quartz crystal unit shall be test insulation resistance by 100V volts d.c . 酒精加压法：晶体浸入酒精罐中，加压（压力0.5kg，时间30分钟）；撤去压力后，晾干晶体，测量引线与外壳之间绝缘电阻（100V直流电压）。	D
13	Aging 老化	Quartz crystal unit shall be stored at a temperature 85±2℃ for 720±12 hours(30days),and then it shall be subjected to standard atmospheric conditions for 1 hour. 晶体在温度85±2℃中放置720小时（30天）±12小时后，在常温常湿状态下放置1小时后测试。	A

Accept Level:
判定标准:

No.	specification 标准
A	Satisfying the electric characteristic; Frequency change is at the range of 5PPM and resistance change is at the range of 5Ω. 电气性能可满足要求：频率变化量在5ppm以内,电阻变化量在5Ω以内。
B	After each test,no visible damage shall be manifested,nor shall the hermetic seal break down 试验后，无机械损伤
C	Dipping in 3 sec.A new uniform coating of solder shall covera minimum of 95% of the surface being immersed. 浸锡时间3秒以内，引线挂锡面积95%以上。
D	Insulation resistance of leads shall be more than 500MΩ(100V DC). 端子之间的绝缘电阻≥500MΩ(100V DC)。