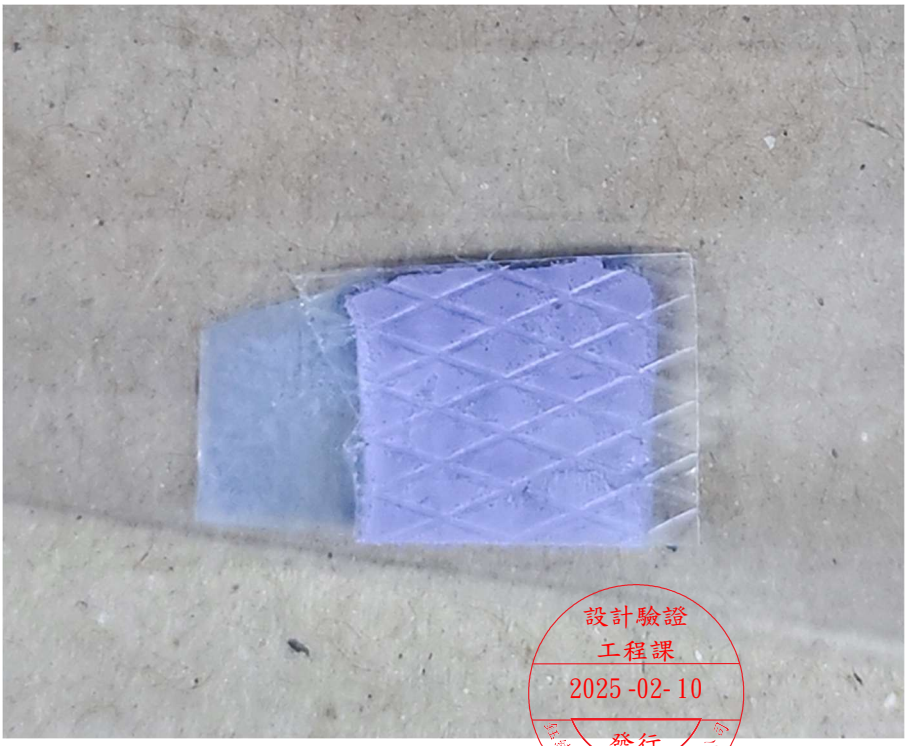

設計驗證
工程課
2025 -02- 10
發行

翰興科技股份有限公司
SUPA MATERIAL, INC.
235 新北市中和區中正路700號13樓之8
13F-8, No.700, Zhongzheng Rd., Zhonghe Dist., New Taipei City, Taiwan 235
Tel: 886-2-8227-8889 Fax: 886-2-8227-8890

APPROVAL

Customer Name : DIVA LABORATORIES, LTD.

Customer Part No. : 3H010010700(H0223)

Inspected By : _____

Checked By : _____

Approved By : _____

Date : _____

設計驗證
工程課
2025 -02- 10
發行
翰興科技開發股份有限公司

MODEL NO.	PART NO.	DESCRIPTION	SPEC NO.
Sarcon PG65A	3Y601000100100A	Highly-conformable, highly-compressible, high-performance, putty type silicone gap filler; thermal conductivity is 6.5 W/mK. Color: Purple Size: 10mm x 10mm Thickness: 1.0mm	PG65A

Please kindly find and approve the specifications inserted herein and return one copy hereof with your signature of approval.

Prepared By Amanda

Checked By Carrie

Confirmed By Joey

SARCON PG65A

Highly-conformable, highly-compressible,
high-performance, putty-type silicone gap filler
Available thickness 0.5 to 2mm

Characteristics	Unit	0.5mm	1.0mm	1.5mm	2.0mm
Color	/	Purple	Purple	Purple	Purple
Thermal impedance @ 14.5psi	°Cin^2/W	0.11	0.15	0.13	0.18
Thermal conductivity	W/mK	6.5	6.5	6.5	6.5
Breakdown voltage	KV/mm	11	11	11	11
Volume resistivity	MΩ*m	2 x10^9	2 x10^9	2 x10^9	2 x10^9
Thickness	mm	0.5 ± 0.15	1.0 ± 0.2	1.5 ± 0.2	2.0 ± 0.35
Specific gravity	/	3.2	3.2	3.2	3.2
Pressure for 10% of compression	psi	8.38	13.37	9.63	5.89
Pressure for 20% of compression	psi	31.27	22.88	21.07	19.26
Pressure for 30% of compression	psi	47.13	43.05	36.25	29.45
Pressure for 40% of compression	psi	80.66	60.72	49.84	38.97
Pressure for 50% of compression	psi	93.57	72.95	62.87	52.79
Sustain 50% of compression	psi	14.27	8.84	7.14	5.44
UL flammability class	/	94 V-0	94 V-0	94 V-0	94 V-0
Operating temperature range	°C	-40 to +150	-40 to +150	-40 to +150	-40 to +150

中望CAD教育版设计

REVISIONS				
LTR	DATE	UPDATE DESCRIPTION	SIGN	EC NO.
A	2025/02/05	第一次发行		

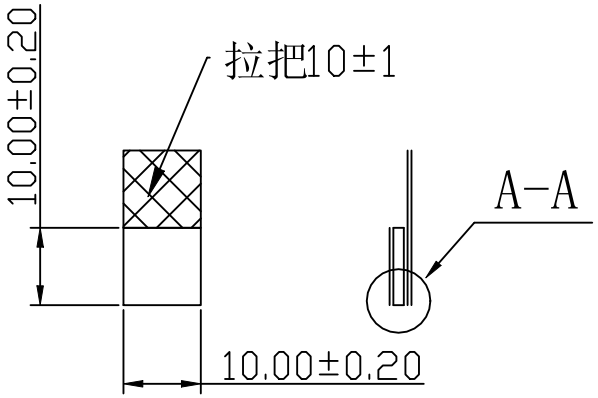

設計驗證
工程課
2025-02-10
發行
鈺緯科技開發股份有限公司

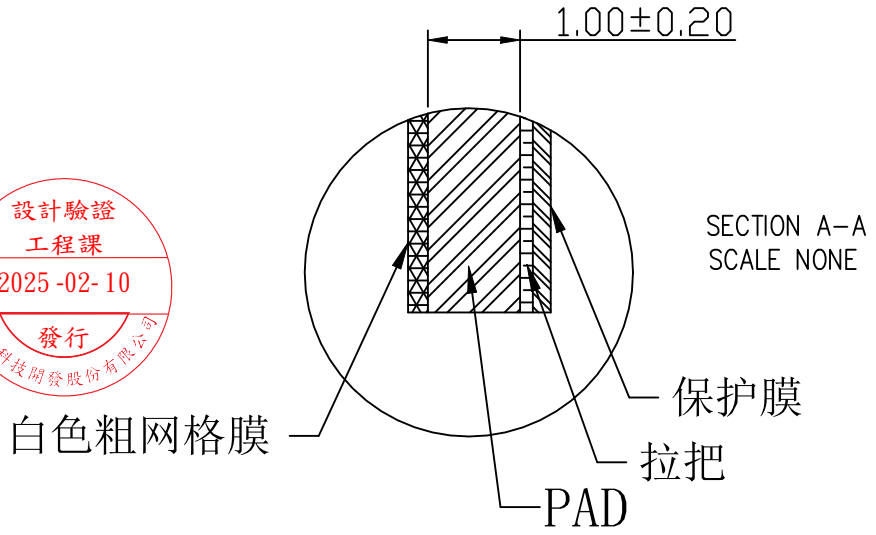

裁切要求	底膜拉把
原料材质	PG65A
原料颜色	紫色
成品上膜	网/白

Note:

1、散热片本身不可有指甲印、压伤、变形、脏污、异常变色等外观不良;

2、未注明公差见宽容表;

环保要求：禁止使用I级环境管理物质!符合伟翰公司环境管理物质使用规范或依客户环保要求。

图档编号. LS-10281 FINISH		昆山伟翰电子有限公司 EAPUS TECHNOLOGY (KUNSHAN) CO., LTD.		
加工方式	裁切	客户名称 Champleader 鈺緯	客户料号. 3H010010700(H0223)	
TOLERANCE TABLE		公司料号. 3Y601000100100A		
50.0— ~~ mm	±0.50			
30.0—50.0 mm	±0.40			
10.0—30.0 mm	±0.20	版本 A	UNIT mm 0 10	THIRD ANGLE PROJECTION
00.0—10.0 mm	±0.10			
ANGLE	±1°			
SHEET SIZE / SCALE / SHEET		核准者/DATE Seven 2025/02/05	审核者/DATE Seven 2025/02/05	制作者/DATE Jerry 2025/02/05
A4	1/1	1 of 1		

表单编号：KSA-FM-380 版本：A/1

中望CAD教育版设计

全尺寸测量報告

Part Number : 3H010010700 (H0223) Part Description : PG65A Revision :	Supplier : **偉翰電子(昆山)有限公司** ISR No : Material Spec: **10x10x1.0mm**	Date: **2025/2/6** Cavity / Tool # : Inspector: Lucky	New: Revised: Resubmission:

MOI-Method of inspection abbreviation: HG = Height gauge, MIC = Micrometer, DC = Dial Caliper, P = Protractor, OC = Optical Comparator, CG = Checking Gauge, CMM = Coordinate Measuring Machine, OMM = Optical Coordinate Measuring Machine, HT = Hardness Trester, TG = Thickness Gauge, VIS = Visual, PG = Plug Gauge,
OTHER:

DRAWING SPECIFICATIONS						INSPECTION RESULTS							INSPECTION ANALYSIS					
					Inspection	Sample Number			Deviation from Nominal				% Tolerance		Alert/Rej		Supplier	RD Engineering
ITEM	LOCATION	NOMINAL (单位：mm)	+TOL (单位：mm)	-TOL (单位: mm)	Method	1	2	3	1	2	3	Mean	UPPER	LOWER	HIGH	LOW	Remarks	Disposition
1	L	10.00	0.20	(0.20)	Caliper	10.03	10.03	9.96	***0.030***	***0.030***	***-0.040***	***10.007***	**15%**	**-20%**				
2	W	10.00	0.20	(0.20)	Caliper	10.03	10.04	9.96	***0.030***	***0.040***	***-0.040***	***10.010***	**20%**	**-20%**				
3	H	1.00	0.20	(0.20)	Caliper	1.03	1.04	0.96	***0.030***	***0.040***	***-0.040***	***1.010***	**20%**	**-20%**				

核准：朱月平　　审核：葛梦菲　　制成：倪玉

表单编号：KSA-FM-237　版本：A/2

SAFETY DATA SHEET

Date Prepared Oct. 4, 2022

1. Chemical Product & Company Information

Product Name : SARCON PG65A-00-PL

Manufacture's Name : Fuji Polymer Industries Co., Ltd.
Address : 175 Kajiyashiki-cho Toyota-shi Aichi, Japan
Telephone Number : +81-565-65-2121
(Aichi Plant / Quality Assurance Dept.)

2. Hazards Identification

GHS Classification :
Physical hazards : Classification not possible
Health hazards
Specific target organ toxicity – single exposure : Category 3(Respiratory tract irritation)
Specific target organ toxicity – repeated exposure : Category 1(Lung:inhalation)
Environmental hazards : Classification not possible

GHS Label Elements
Pictogram :



Signal Word : danger

Hazard Risk Statement : H335 May cause respiratory irritation
H372 Causes damage to organs through prolonged or repeated exposure.(Lung)

Precautionary Statement
Because it is a molded object, the risk of exposure is low and it must be considered that there is no inhalation of dust.
So please handle it with the following points in mind.

Prevention : Do not breathe dust.
Avoid breathing dust.
Wash hands thoroughly after handling.
Do not eat, drink or smoke when using this product.
Response : IF INHALED:Remove person to fresh air and keep comfortable for breathing.
Call a POISON CENTER/doctor/.../if you feel unwell.
Get medical advice/attention if you feel unwell.
Storage : In order to prevent any characteristics alteration, keep it away from direct sunlight, water leakage, moisture, and heat.
Disposal : Dispose of contents/container by outsourcing to an authorized waste disposer approved by the local prefectural governor.
Other Hazard : No information

3. Composition/Information on Ingredients

Chemical characterization : Mixture

Generic Name : Silicone Rubber

Ingredients and Contents

Part	Component Name	Content	CAS No.	METI Number
	Silicone polymer	3-7%	—	
	Aluminum oxide	90-93%	1344-28-1	(1)-23
	Filler	2-4%	—	
	Boron compound	<0.2%	—	
	Yttrium oxide	<0.2%	1314-36-9	(1)-560
	Other ingredients	<0.1%	—	

4. First Aid Measures

Although it is thought that this is not inhaled and not because of product, give a description as below.
Because it is a molded product, it must be considered not to inhale, swallow or get in one's eye, as described below.

In Case of Inhalation : Remove person to fresh air and keep comfortable for breathing.
Get medical advice/attention.
In Case of Skin Contact : Wash with plenty of soap and water.
If skin irritation occurs, it get medical advice/attention.
In Case of Eye Contact : Rinse cautiously with water for several minutes. Remove contact lenses, if present and easy to do. Continue rinsing.
If eye irritation persists, it get medical advice/attention.
In Case of Ingestion : Rinse mouth. Immediately spit it out .
Get medical advice/attention.
Important Symptoms and Hazard effects : No information
Personal Protection for First Aid or Rescue Personnel :
The rescuer wears a tool for protection such as rubber gloves, sealing up goggles.
Note to physicians : No information

5. Fire Fighting Measures

Suitable Extinguishing Media : We recommend any Dry chemical, Carbon dioxide(CO2), Foam, Water spray, Dry sand.
Unsuitable Extinguishing Media : Straight water injection
Specific Hazards : Fire may produce irritating and/or toxic gases.
Specific Fire Fighting : Prohibit the entrance except the person concerned to the outskirts of the fire scene. The fire fighting should be done from the windward side. Use an appropriate fire extinguishing method depending on a surrounding.
Protection for Fire-fighter : Wear appropriate protective equipment(e.g., gloves, goggles, mask) when fighting fires.

6. Accidental Release Measures

Personal Precautions, Protective Equipment and Emergency Procedures :
Wear appropriate protective equipment(e.g., gloves, goggles, protective clothing) when cleaning up spills.

Environmental Precautions :
Be careful not to be exhausted in a river, the sewer, the soil.
Methods and Materials for Containment and Cleaning up : Gather the material.
Prevention of secondary hazards :
Remove a thing becoming the nearby firing source immediately.
Set up a fire extinguisher, when fire it.

7. Handling and Storage

Handling :
Technical Measures : Implement the measures mentioned in "8.Exposure Controls/Personal Protection". Wear appropriate protective equipment.
Local and General Ventilation : In case of powder dust happens, install the local or general ventilation.
Safe Handling Advice : Keep away from heat/hot surfaces/sparks/open flames.
In case of powder dust happens, do not inhale it.
Avoid contact with eyes and the skin.
Wash hands thoroughly after handling.

Storage :
Technical Measures : Equip with adequate sunlight/lights and ventilation in a storing place .
Storage Conditions : In order to prevent any characteristics alteration, keep it away from direct sunlight, water leakage, moisture, and heat.
Store in a dry, well-ventilated place.
Substances to Avoid Mixing : Refer to precautions indicated in "10. Stability and Reactivity".
Packaging Material : In order to prevent from deterioration, use packing without any damage.

8. Exposure Controls/Personal Protection

Standard Control Notification : Not established.

Industrial Hygiene Standards :
Japan Association on Industrial Health Guideline :
Filler (Inhalable dust) : 2 mg/m^3, (Total dust) : 8 mg/m^3
Aluminum oxide (Inhalable dust) : 0.5 mg/m^3, (Total dust) : 2 mg/m^3
Yttrium oxide (Inhalable dust) : 2 mg/m^3, (Total dust) : 8 mg/m^3
Ammonia gas(As resolvent of Filler) 25ppm

ACGIH :
Filler (Total dust) : 10 mg/m^3
Aluminum oxide ALUMINUM METAL AND INSOLUBLE COMPOUNDS, RESPIRABLE FRACTION
TLV-TWA = 1 mg/m^3
Yttrium oxide (Total dust) : 1 mg/m^3
Ammonia gas(As resolvent of Filler) 25ppm(eight hours mean)

Engineering Measures : Risk of exposure due to moldings is low
Provide hand-washing, washing eyes and physical washing facilities in the place where the product is handled near, if necessary.
In case of powder dust happens, perform local or general ventilation.

Personal Protective Equipment
Respiratory protection : Wear protection mask and a tool for protection for breathing, if necessary.
Hand protection : Impermeable protection gloves, if necessary.
Eye protection : Protection glasses, goggles type protection glasses, if necessary.
Skin protection : Wear protective clothing or protection apron, if necessary.

Hygiene Measures : Do not eat, drink or smoke when using this product.
Wash hands thoroughly after handling.
Check the tool for protection by a tool for protection check list regularly.

9. Physical and Chemical Properties

Physical State	: Form	: Solid
	Color	: Purple
Odor	: none	
pH	: Not determined.	
Melting Point/Freezing Point	: Not determined.	
Boiling point, Initial Boiling Point, and Boiling Range	: Not determined.	
Flash Point	: Not determined.	
Autoignition Temperature	: Not determined.	
Combustion or explosion limit(Lower/Upper)	: Not determined.	
Vapor Pressure (mmHg)	: Not determined.	
Vapor Density (AIR=1)	: Not determined.	
Specific Gravity	: 3.25	
Solubility (Water)	: Insoluble	
Octanol/water partition	: Not determined.	
Decomposition Temperature	: Not determined.	
Other information	: Not determined.	

10. Stability and Reactivity

Reactive and Chemical Stability	: On the normal handling condition, it is stable.
Possibility of Hazardous Reactions	: None.
Conditions to Avoid	: Avoid substance to avoid mixing/contact
Substance to Avoid Mixing/Contact With	: Strong oxidising agents
Hazardous Decompositions Products	: Silicone polymer : If it is heated to >150 degrees C, trace quantities of formaldehyde may be released, and adequate ventilation is required.

11. Toxicological Information

We believe that harmful health effects do not occur with the recommended usage method, but below we describe the raw materials used.

Acute Toxicity(oral)	: Aluminum oxide	rat	LD50 > 5000mg/kg
	Filler	rat	LD50 > 2000mg/kg
	Boron compound	rat	LD50 > 5000mg/kg
	Yttrium oxide	rat	LD50 > 1000mg/kg
Acute Toxicity(dermal)	: No information		
Acute Toxicity(inhalation:gas)	: Not applicable		
Acute Toxicity(inhalation:vapor)	: No information		
Acute Toxicity(inhalation:dust/mist)	: No information		

Skin Corrosion/Irritation :

Filler

Repeated or prolonged contact with skin may cause dermatitis.

Serious Eye Damage/Irritation :

Filler

May cause slight inflammation.

Respiratory Organs Sensitization : No information

Skin Sensitization :

Filler

May produce stimulation to a nose, a throat and the lungs. Furthermore, may have an influence on the respiratory organs repeatedly when inhale it excessively.

Germ Cell Mutagenicity :

Aluminum oxide

It was negative with or without metabolic activation in Ames test using salmonella. When it did not become metabolic activation in genetic exchange test using bacillus subtilis, it was negative.

Carcinogenicity :

Aluminum oxide

Because it is classified in A4 in ACGIH, assumed it "Not classified". In addition, in the exposure test that inhaled aluminum oxide fiber for 86 weeks to a rat, fibrosis and oncogenesis were not seen. In the intrapleural administered test aluminum oxide fiber(whisker)of 4-types,The increase in pleura sarcoma incidence was seen. The oncogenesis was not seen in two other fiber and non-fibrillar test substance.

Reproductive Toxicity :

Aluminum oxide

In the examination that gave bait including the aluminum to a pregnancy rat, the influence was not seen in an embryo, the death rate of fetuses, the number of the litters, the weight and size of young rat.

Specific Target Organ. Systemic Toxicity(Single Exposure) :

Aluminum oxide

Classified it in Category 3 (Respiratory tract irritation) from a mention of upper respiratory tract irritation (ICSC (2000)). When inhale it at high density, it was confirmed cough, pant, respiratory tract irrtation by the physical action, unpleasant deposit of nasal meatus and the aggravation of the symptom in the Homo sapiens having ventilatory impairment.

Specific Target Organ. Systemic Toxicity(Repeated Exposure) :

Aluminum oxide

By occupational exposure, classified it in (EHC (1997)) mentioned in Category 1 where fibrosis of lung was accepted. In addition, in workers exposured by aluminum oxide dust of aluminum production and the pottery can not confirm the pneumoconiosis. According to the examination of inhalation exposure to a rat and a rabbit for 28 weeks, it was confirmed structural or functional change of the trachea or the bronchi, chronic pulmonary edema and dead.

Aspiration Hazard : No information

Other : No information

12. Ecological Information

We do not believe that the recommended usage method will affect the environment, but below we describe the raw materials used.

Ecotoxicity		
Fish	: Aluminum oxide	Salmo trutta: 96hr-NOEC > 100mg/L
Crustacea	: Aluminum oxide	Daphnia magna: 48hr-NOEC > 100mg/L
Algae	: Aluminum oxide	Algae: 72hr-NOEC > 100mg/L
Other	: No information	
Persistence and Degradability	: Filler	May decompose forming hazardous ammonia on contact with water or moisture.
Bioaccumulative Potential	: Silicone polymer	No bioaccumulation potential.
Mobility in Soil	: Silicone polymer	In soil, siloxanes are degraded.
Hazardous to the ozone layer	: Do not include an ingredient listed by an annex of Montreal Protocol.	
Other hazardousness	: Silicone polymer	Fate and Effects in Waste Water Treatment Plants No adverse effects on bacteria. Removed >90% by binding onto sewage sludge. The siloxanes in this product do not contribute to the BOD.

13. Disposal Considerations

Residual Waste :

Dispose of in accordance with relevant laws and local regulation.
Outsource to the industrial waste disposer who has the permission of govemor of each prefecture or local public body for adequate disposal.

14. Transport Information

International Regulations	Land Transport	: Follow a rule of ADR/RID.
	Sea Transport	: Follow a rule of IMO.
	Air Transport	: Follow a rule of ICAO/IATA.
	UN-Number	: Not applicable
	UN-Hazard classr	: Not applicable
	Proper Shipping Name	: Not applicable
	Packing group	: Not applicable
	Marine Pollutant	: Not applicable
Local Regulations	Land regulation information	: Follow the Fire Services Act.
	Marine regulation information	: Follow the Law for Safety of Vessels.
	Aviation regulation information	: Follow the Aviation Act.

Specific safety measures at the time of the transportation and condition :
Under loading, containers must be carefully handled to prevent damage of containers and must be fixed them tightly to prevent falling of containers.
Avoid the transportation under direct rays of the sun and the higher temperature
Avoid contact with the water
Transport it according to the standard of other laws concerned
Emergency Response Guidebook number : Not applicable

15. Regulatory Information

Law Concerning the Examination and Regulation of Manufacture, etc. of Chemical Substances. : Not applicable
Industrial Safety and Health Law : Article 57-2 Regulated Substance(s)
54 Yttrium and its compounds
189 Aluminum oxide

Poisonous and Deleterious Substance Control Law : Not applicable
Pollutant Release and Transfer Register(PRTR law) : 405 Boron and its compounds

Fire Service Law : Non-hazardous materials
Sea Pollution Prevention Act : Not applicable
Aviation Act : Not applicable
Law for Safety of Vessels : Not applicable

16. Other Information

Although the description content is based so far on our latest knowledge, absolute accuracy of the content and comprehensiveness of collecting information are not complete. Since all raw materials have unknown dangers, it is necessary to pay sufficient attention to handling.
Also, this information relates to raw materials and products being used, and we do not assume that this product is combined with other materials or processed.
This product is used for industrial; therefore, any other use of the product which involves medical purpose and other process is responsibility of the user. Do not use the purpose of implant for human body or if there is any possibilities to remain in body.
The contents of this SDS are subject to change without notice due to new findings.
The content of this SDS does not determine delivery specifications or rules.

TÜVRheinland®
Precisely Right.

Report No.:	242144467-02
Client:	**FUJIPOLY (THAILAND) CO., LTD.**
Contact Information:	55/8 Moo 13, Navanakorn Industrial Estate, Phase 4, Phaholyothin Road, Klong Nueng, Klong Luang, Pathumthanee 12120
Identification/ Model No(s):	SARCON PG65A Series
Sample Receiving date:	2024-09-30
Testing Period:	2024-09-30 to 2024-10-03
Delivery condition:	*Apparent good, Samples tested as received*

Test Specification:	*Test result:*
Test parameter and specification was selected by client;	
1. RoHS (recast): Restriction of the Use of Certain Hazardous Substances in Electrical and Electronic Equipment, 2011/65/EU and its amendment Directive (EU) 2015/863 of 31 March 2015	PASS

Other information:

Material Type: Silicone Product
Manufacturer: FUJIPOLY (THAILAND) CO., LTD.
Country of Origin: Thailand

For and on behalf of
TÜV Rheinland Thailand Ltd.

TÜV RHEINLAND THAILAND LTD. TÜV

2024-10-07 — Nutkritta Thongdee / Section Manager

Date — *Name/Position*

Sample information is provided by customer. Test result is drawn according to the kind and extent of tests performed.
This test report relates to the above mentioned test sample. Without permission of the test center this test report is not permitted to be duplicated in extracts. This test report does not entitle to carry any safety mark on this or similar products.
The Decision Rule is apply "Zero Guard Band" in accordance to ILAC-G8:09/2019 and IEC Guide 115:2021, describes the statement of conformity and its rule of enforcement for test results are applicable throughout this test report. Unless otherwise be required by the standard or requested by the customer.

Test Report No.: 242144467-02

Material List:

Item: SARCON PG65A Series

Material No.	Material	Color	Location
M001	Rubber	Purple	Refer to photo

Test Report No.: 242144467-02

1. Heavy metal content (Pb, Cd, Hg, Cr(VI))

Test Method: Total Lead - Ref. to IEC 62321-5 Edition 1.0 : 2013-06., determine by ICP-OES.
Total Cadmium - Ref. to IEC 62321-5 Edition 1.0 : 2013-06., determine by ICP-OES.
Total Mercury - Ref. to IEC 62321-4 : 2013 + AMD 1 : 2017, determine by ICP-OES.
Hexavalent Chromium (Cr VI)- Ref. to IEC 62321-7-2 Edition 1.0 : 2017-03, determine by UV-Vis Spectrometer.

Test Result:

		Test No.	T001
		Material No.	M001
Test Parameter	Unit	RL	Result
Lead	mg/kg	2	n.d.
Cadmium	mg/kg	2	n.d.
Mercury	mg/kg	2	n.d.
Hexavalent Chromium	mg/kg	5	n.d.

Abbreviation: < = Less Than
RL = Reporting Limit
n.d. = Not Detected (<MDL)
mg/kg = Milligram per kilogram is equal to Parts Per Million (ppm)

Remark:

1. Method Detection Limit (MDL) of Pb, Cd, Hg is 1 mg/kg and Cr(VI) is 3 mg/kg

Maximum permissible limit for RoHS (recast): Restriction of the Use of Certain Hazardous Substances in Electrical and Electronic Equipment, 2011/65/EU and its amendment Directive (EU) 2015/863 of 31 March 2015;

Elements	Maximum Permissible Limit
Lead (Pb)	1000 mg/kg
Cadmium (Cd)	100 mg/kg
Mercury (Hg)	1000 mg/kg
Hexavalent Chromium (Cr VI)	1000 mg/kg

2. Brominated Flame retardant: PBBs, PBDEs

Test Method: Ref. to IEC 62321-6 Edition 1.0, 2015-06, determine by GC-MS.

Test Result:

		Test No.	T001
		Material No.	M001
Test Parameter	Unit	RL	Result
Bromobiphenyl	mg/kg	5	n.d.
Dibromobiphenyl	mg/kg	5	n.d.
Tribromobiphenyl	mg/kg	5	n.d.
Tetrabromobiphenyl	mg/kg	5	n.d.
Pentabromobiphenyl	mg/kg	5	n.d.
Hexabromobiphenyl	mg/kg	5	n.d.
Heptabromobiphenyl	mg/kg	5	n.d.
Octabromobiphenyl	mg/kg	5	n.d.
Nonabromobiphenyl	mg/kg	5	n.d.
Decabromobiphenyl	mg/kg	5	n.d.
Sum Polybrominated biphenyls (PBBs)	mg/kg	--	n.d.
Bromodiphenylether	mg/kg	5	n.d.
Dibromodiphenyl ether	mg/kg	5	n.d.
Tribromodiphenyl ether	mg/kg	5	n.d.
Tetrabromodiphenyl ether	mg/kg	5	n.d.
Pentabromodiphenyl ether	mg/kg	5	n.d.
Hexabromodiphenyl ether	mg/kg	5	n.d.
Heptabromodiphenyl ether	mg/kg	5	n.d.
Octabromodiphenyl ether (OctaBDE)	mg/kg	5	n.d.
Nonabromodiphenyl ether	mg/kg	5	n.d.
Decabromodiphenyl ether (DecaBDE)	mg/kg	5	n.d.
Sum Polybrominated diphenyl ethers (PBDEs)	mg/kg	--	n.d.

Abbreviation: < = Less Than, n.d. = Not Detected (<MDL), RL = Reporting Limit
mg/kg = Milligram per kilogram is equal to Parts Per Million (ppm)
PBBs = Polybrominated Biphenyls, PBDEs = Polybrominated Diphenyl Ethers
1. Method Detection Limit (MDL) of each PBBs and PBDEs is 3 mg/kg

Remark:

Maximum permissible limit for RoHS (recast): Restriction of the Use of Certain Hazardous Substances in Electrical and Electronic Equipment, 2011/65/EU and its amendment Directive (EU) 2015/863 of 31 March 2015;

Elements	Maximum Permissible Limit
Polybrominated biphenyls (PBBs)	1000 mg/kg
Polybrominated diphenyl ethers (PBDEs)	1000 mg/kg

3. Phthalates content (BBP, DBP, DEHP, DIBP)

Test Method: Ref. to IEC 62321-8 Edition 1.0 : 2017-03 determine by GC-MS.

Test Result:

Test No.	Material No.	(mg/kg)			
		BBP	DBP	DEHP	DIBP
		RL (mg/kg)			
		50	50	50	50
T001	M001	n.d.	n.d.	n.d.	n.d.

Abbreviation:
< = Less than
RL = Reporting Limit
n.d. = Not Detected (<MDL)
mg/kg = Milligram per kilogram is equal to Parts Per Million (ppm)
BBP = Benzylbutyl phthalate
DBP = Dibutyl phthalate
DEHP = Bis(2-ethylhexyl) phthalate
DIBP = Diisobutyl phthalate

Remark:

1. Method Detection Limit (MDL) of BBP, DBP, DEHP and DIBP is 15 mg/kg

   Maximum permissible limit for RoHS (recast): Restriction of the Use of Certain Hazardous Substances in Electrical and Electronic Equipment, 2011/65/EU and its amendment Directive (EU) 2015/863 of 31 March 2015;

Elements	Maximum Permissible Limit
Benzylbutyl phthalate (BBP)	1000 mg/kg
Dibutyl phthalate (DBP)	1000 mg/kg
Bis(2-ethylhexyl) phthalate (DEHP)	1000 mg/kg
Diisobutyl phthalate (DIBP)	1000 mg/kg

Test Report No.: 242144467-02

Sample Photo



FLOW CHART

Flow chart of Pb and Cd Content

Test method: IEC 62321-5 Edition 1.0: 2013-06

1. The sample was totally dissolved by pre-conditioning method according to below flow chart.
2. Name of the person who made measurement: Natdanai Pornmula
3. Name of the person in charge of measurement: Natdanai Pornmula

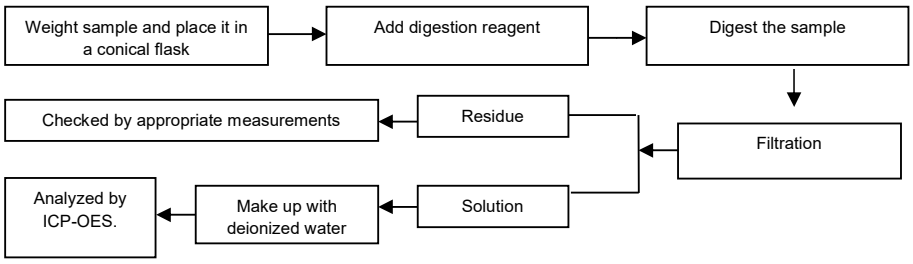

Flow chart of Hg Content

Test method: IEC 62321-4: 2013 + AMD 1: 2017

1. The sample was totally dissolved by pre-conditioning method according to below flow chart.
2. Name of the person who made measurement: Natdanai Pornmula
3. Name of the person in charge of measurement: Natdanai Pornmula

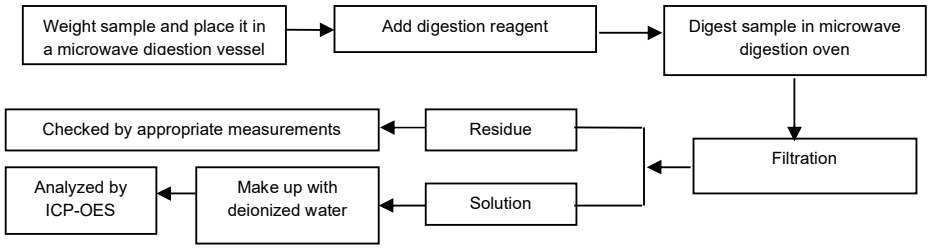

FLOW CHART

Flow chart of Extraction of Cr (VI) in Insoluble polymers

Test method: IEC 62321-7-2 Edition 1.0: 2017-03

1. The sample was totally dissolved by pre-conditioning method according to below flow chart.
2. Name of the person who made measurement: Tidaporn Rittisorn
3. Name of the person in charge of measurement: Tidaporn Rittisorn

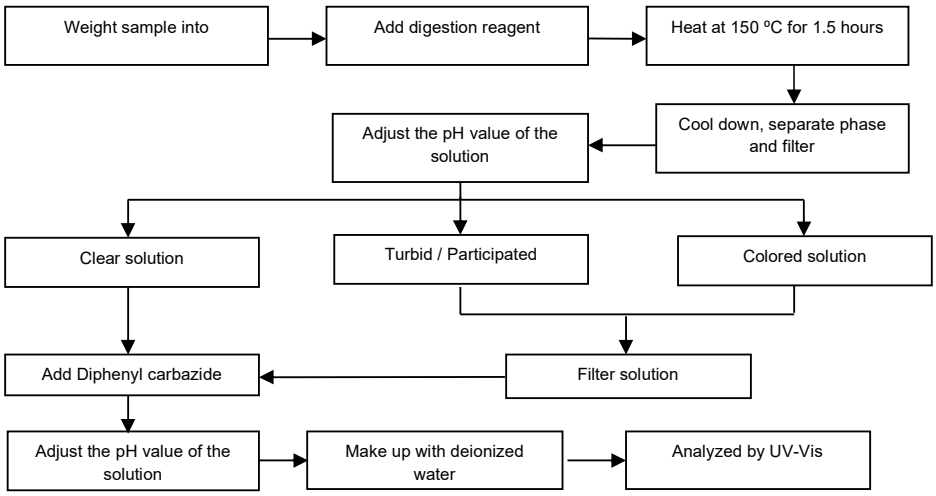

Flow chart of Brominated Flame retardant: PBBs, PBDEs

Test method: IEC 62321-6 Edition 1.0: 2015-06

1. The sample was totally dissolved by pre-conditioning method according to below flow chart.
2. Name of the person who made measurement: Rangrong Tassanapayak
3. Name of the person in charge of measurement: Rangrong Tassanapayak

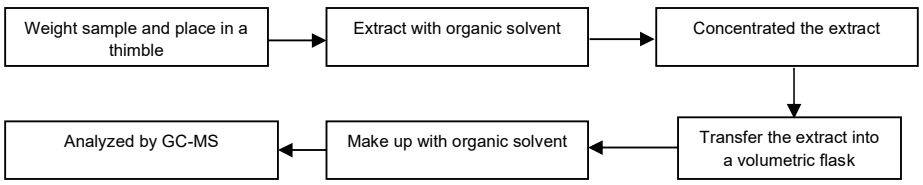

Flow chart of Phthalates content (BBP, DBP, DEHP, DIBP)

Test method: IEC 62321-8 Edition 1.0: 2017-03

1. The sample was totally dissolved by pre-conditioning method according to below flow chart.
2. Name of the person who made measurement: Atikamas Polampai
3. Name of the person in charge of measurement: Atikamas Polampai

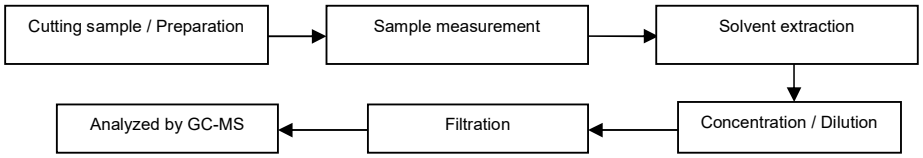

-END-

General Terms and Conditions of Business of TÜV Rheinland Thailand Ltd.

1. Scope

1.1 The following terms and conditions apply to agreed services including consultancy services, information, deliveries and similar services as well as ancillary services and other secondary obligations provided within the scope of contract performance.

1.2 The client's General Terms and Conditions of Business, including the client's Terms and Conditions of Purchasing, if any, shall not apply and shall hereby be expressly excluded. No contractual terms and conditions of the client shall form part of the contract even if TÜV Rheinland Thailand Ltd. does not explicitly object to them.

2. Quotations

Unless otherwise agreed, all quotations submitted by TÜV Rheinland Thailand Ltd. shall be subject to change without notice.

3. Coming into effect and duration of contracts

3.1 The contract shall come into effect for the agreed term upon the quotation letter of TÜV Rheinland Thailand Ltd. or a separate contractual document being signed by both contracting parties, or upon the works requested by the client being carried out by TÜV Rheinland Thailand Ltd.. If the client instructs TÜV Rheinland Thailand Ltd. without receiving a prior quotation from TÜV Rheinland Thailand Ltd. (quotation), TÜV Rheinland Thailand Ltd. is – in its sole discretion – entitled to accept the order by giving written notice of such acceptance (including notice sent via electronic means) or by performing the requested services.

3.2 The contract term starts upon the coming into effect of the contract in accordance with article 3.1 and shall continue for the term agreed in the contract.

3.3 If the contract provides for an extension of the contract term, the contract term will be extended by the term provided for in the contract unless terminated in writing by either party with a six-week notice to the end of the contractual term.

4. Scope of services

4.1 The scope of the services shall be decided solely by a unanimous declaration issued by both parties. If no such declaration exists, then the written confirmation of order by TÜV Rheinland Thailand Ltd. shall be decisive.

4.2 The agreed services shall be performed in compliance with the regulations in force at the time the contract is entered into.

4.3 Furthermore, TÜV Rheinland Thailand Ltd. is entitled to determine (in its sole discretion) the method and nature of the assessment unless otherwise agreed in writing or if mandatory provisions require a specific procedure to be followed.

4.4 On execution of the work there shall be no simultaneous assumption of any guarantee of the correctness (proper quality) and working order of either tested or examined parts nor of the installation as a whole and its upstream and/or downstream processes, organisations, use and application in accordance with regulations, nor of the systems on which the installation is based; in particular, no responsibility shall be assumed for the construction, selection of materials and assembly of installations examined, nor for their use and application in accordance with regulations unless these questions are expressly covered by the contract.

4.5 In the case of inspection work, TÜV Rheinland Thailand Ltd. shall not be responsible for the accuracy or checking of the safety programmes or safety regulations on which the inspections are based, unless otherwise expressly agreed in writing.

5. Performance periods/dates

5.1 The contractually agreed periods and dates of performance are based on estimates of the work involved which are prepared in line with the details provided by the client. They shall only be binding if confirmed as binding by TÜV Rheinland Thailand Ltd. in writing.

5.2 If binding periods of performance have been agreed, these periods shall not commence until the client has submitted all required documents to TÜV Rheinland Thailand Ltd. This also applies, even without express approval by the client, to all extensions of agreed dates for performance not caused by TÜV Rheinland Thailand Ltd..

6. The client's obligation to cooperate

6.1 The client shall guarantee that all cooperation required on its part, its agents or third parties will be provided in good time and at no cost to TÜV Rheinland Thailand Ltd..

6.2 Design documents, supplies, auxiliary staff, etc. necessary for performance of the services shall be made available free of charge by the client. Moreover, collaborative action of the client must be undertaken in accordance with legal provisions, standards, safety regulations and accident prevention instructions.

6.3 The client shall bear any additional cost incurred on account of work having to be redone or being delayed as a result of late, incorrect or incomplete information or lack of proper cooperation. Even where a fixed or maximum price is agreed, TÜV Rheinland Thailand Ltd. shall be entitled to charge extra for such additional expense.

7. Invoicing of work

7.1 If the scope of performance is not laid down in writing when the order is placed, invoicing shall be based on costs incurred. If no payment is agreed in writing, invoicing shall be in accordance with the TÜV Rheinland Thailand Ltd. price list valid at the time of performance.

7.2 Unless otherwise agreed, work shall be invoiced according to the progress of the work.

7.3 If the execution of an order extends over more than one month and the value of the contract or the agreed fixed price exceeds €2,500.00, TÜV Rheinland Thailand Ltd. may demand payments on account or in instalments.

8. Payment terms

8.1 All invoice amounts shall be due for payment without deduction on receipt of the invoice. No discounts shall be granted.

8.2 Payments shall be made to the bank account of TÜV Rheinland Thailand Ltd. as indicated on the invoice, stating the invoice and customer numbers.

8.3 In cases of default of payment, TÜV Rheinland Thailand Ltd. shall be entitled to claim default interest at a rate of 8% above the base interest rate of German central bank (Deutsche Bundesbank). At the same time, TÜV Rheinland Thailand Ltd. reserves the right to claim further damages.

8.4 Should the client default in payment of the invoice despite being granted a reasonable grace period, TÜV Rheinland Thailand Ltd. shall be entitled to cancel the contract, withdraw the certificate, claim damages for non-performance and refuse to continue performance of the contract.

8.5 The provisions set forth in article 8.4 shall also apply in cases involving returned cheques, cessation of payment, and commencement of insolvency proceedings against the client's assets or cases in which the commencement of insolvency proceedings has been dismissed due to lack of assets.

8.6 Objections to the invoices of TÜV Rheinland Thailand Ltd. shall be submitted in writing within two weeks of receipt of the invoice.

8.7 TÜV Rheinland Thailand Ltd. shall be entitled to demand appropriate advance payments.

8.8 TÜV Rheinland Thailand Ltd. shall be entitled to raise its fees at the beginning of a month if overheads and/or purchase costs have increased. In this case, TÜV Rheinland Thailand Ltd. shall notify the client in writing of the rise in fees. This notification shall be issued one month prior to the date on which the rise in fees shall come into effect (period of notice of changes in fees). If the rise in fees remains under 5% per contractual year, the client shall not have any special right of termination. If the rise in fees exceeds 5% per contractual year, the client shall be entitled to terminate the contractual relationship by the end of the period of notice of changes in fees. If the contract is not terminated, the changed fees shall be deemed to have been agreed upon expiry of the above period.

8.9 Only legally established and undisputed claims may be offset against claims by TÜV Rheinland Thailand Ltd.

9. Acceptance

9.1 Any part of the work ordered which is complete in itself may be presented by TÜV Rheinland Thailand Ltd. for acceptance as an instalment. The client shall be obliged to accept it immediately.

9.2 If the client fails to fulfil its acceptance obligation immediately, acceptance shall be deemed to have taken place 4 calendar weeks after performance of the work if TÜV Rheinland Thailand Ltd. has specifically made the client aware of the aforementioned deadline upon performance of the service.

10. Confidentiality

10.1 For the purpose of this agreement, "confidential information" means all information, documents, images, drawings, know-how, data, samples and project documentation which one party (the "disclosing party") hands over, transfers or otherwise discloses to the other party (the "receiving party"). Confidential information also includes paper copies and electronic copies of such information.

10.2 The disclosing party shall mark all confidential information disclosed in written form as confidential before passing it on to the receiving party. The same applies to confidential information transmitted by e-mail. If confidential information is disclosed orally, the receiving party shall be appropriately informed in advance.

10.3 All confidential information which the disclosing party transmits or otherwise discloses to the receiving party in accordance with this agreement:

a) may only be used by the receiving party for the purposes of performing the purpose of the contract, unless expressly otherwise agreed in writing with the disclosing party;

b) may not be copied, distributed, published or otherwise disclosed by the

TÜV Rheinland Thailand Ltd.
123/1, Soi Chalongkung 31
Ladkrabang Industrial Estate
Lamplatew, Ladkrabang,
Bangkok 10520, Thailand

Tel. +66 2 326 1333
Fax. +66 2 326 1334-5
Email: info@tha.tuv.com
Web: www.tuv.com

receiving party, unless this is necessary for fulfilling the purpose of the contract or TÜV Rheinland Thailand Ltd. is required to pass on confidential information, inspection reports or documentation to the authorities or third parties that are involved in the performance of the contract;

c) must be treated by the receiving party with the same level of confidentiality as the receiving party uses to protect its own confidential information, but never with a lesser level of confidentiality than that which is objectively required.

10.4 The receiving party shall disclose any confidential information received from the disclosing party only to those of its employees who need this information to perform the services required for the subject matter of this contract. The receiving party undertakes to oblige these employees to observe the same level of secrecy as set forth in this confidentiality clause.

10.5 Information for which the receiving party can furnish proof that:

a) it was generally known at the time of disclosure or has become general knowledge without violation of this agreement; or

b) it was disclosed to the receiving party by a third party entitled to disclose this information; or

c) the receiving party already possessed this information prior to disclosure by the disclosing party; or

d) the receiving party developed it itself, irrespective of disclosure by the disclosing party, shall not be deemed to constitute "confidential information" as defined in this agreement.

10.6 All confidential information shall remain the property of the disclosing party. The receiving party hereby agrees to immediately (i) return all confidential information, including all copies, to the disclosing party, and/or, on request by the disclosing party, to (ii) destroy all confidential information, including all copies, and confirm the destruction of this confidential information to the disclosing party in writing, at any time if so requested by the disclosing party but at the latest and without special request after termination or expiry of this contract. This does not extend to include reports and certificates prepared for the client solely for the purpose of fulfilling the obligations under this contract, which shall remain with the client. However, TÜV Rheinland Thailand Ltd. is entitled to make file copies of such reports, certificates and confidential information that form the basis for preparing these reports and certificates in order to evidence the correctness of its results and for general documentation purposes.

10.7 From the start of this contract and for a period of three years after termination or expiry of this contract, the receiving party shall maintain strict secrecy of all confidential information and shall not disclose this information to any third parties or use it for itself.

11. Copyrights

11.1 TÜV Rheinland Thailand Ltd. shall retain all exclusive and joint copyrights in the expert reports, test results, calculations, presentations etc. prepared by TÜV Rheinland Thailand Ltd..

11.2 The client may only use expert reports, test results, calculations, presentations etc. prepared within the scope of the contract for the contractually agreed purpose.

11.3 The client may use test reports, test results, expert reports, etc. only complete and unshortened. Any publication or duplication for advertising purposes needs the prior written approval of TÜV Rheinland Thailand Ltd..

12. Liability of TÜV Rheinland Thailand Ltd.

12.1. Irrespective of the legal basis and in particular in the event of a breach of contractual obligations and tort, the liability of TÜV Rheinland Thailand Ltd. for all damage, loss and reimbursement of expenses caused by legal representatives and/or employees of TÜV Rheinland Thailand Ltd. shall be limited to: (i) in the case of contract with a fixed overall fee, ten times the overall fee for the entire contract; (ii) in the case of contracts for annually recurring services, to the agreed annual fee; (iii) in the case of contracts expressly charged on a time and material basis to a maximum of 20,000 Euro and (iv) in the case of framework agreements that provide for the possibility of placing individual orders, to an amount equal to three times the fee for the individual order under which the damage occurred. The maximum liability of TÜV Rheinland Thailand Ltd. is limited in any event of damage or loss to 2.5 Mio Euro.

12.2. The limitation of liability according to article 12.1 above shall not apply to all damage and losses caused by malice, intent or gross negligence on the part of any of the legal representatives of TÜV Rheinland Thailand Ltd. or their vicarious agents. Such limitation shall also not apply to damages arising from a violation of obligations which TÜV Rheinland Thailand Ltd. has guaranteed to perform, damages caused by a person's death, physical injury or illness, or damages for which liability is assumed under the Thai Law.

12.3 In cases involving a fundamental breach of contract, TÜV Rheinland Thailand Ltd. will be liable even where minor negligence is involved. For this purpose, a "fundamental breach" is a material contractual obligation, the performance of which permits the due performance of the contract and which the client may rely on being complied with. Any claim for damages for a fundamental breach of contract shall be limited to the amount of damage reasonably foreseen as a possible consequence of such breach of contract at the time of the breach (reasonably foreseeable damage), unless any of the circumstances described in article 12.2 apply.

12.4 TÜV Rheinland Thailand Ltd. shall not be liable for personnel made available by the client to support TÜV Rheinland Thailand Ltd. in the performance of its services regulated under this contract, unless personnel made available may be regarded as vicarious agents of TÜV Rheinland Thailand Ltd.. If TÜV Rheinland Thailand Ltd. is not liable for personnel made available by the client under the foregoing provision, the client shall indemnify TÜV Rheinland Thailand Ltd. against any claims made by third parties.

12.5 The limitation periods for claims for damages shall be based on statutory provisions.

12.6 None of the provisions of this article 12 changes the burden of proof to the disadvantage of the client.

13. Partial invalidity, written form, place of jurisdiction

13.1 No ancillary agreements to this contract have been concluded.

13.2 All amendments and supplements must be in writing in order to be effective; this also applies to amendments and supplements to the requirement for the written form.

13.3 Should one or several of the provisions under this contract be or become ineffective, the contracting parties shall replace the invalid provision with a legally valid provision that comes closest to the content of the invalid provision in legal and commercial terms.

13.4 The place of jurisdiction for all disputes arising in connection with this contract shall be Bangkok, Thailand. This contract is governed by the Thailand substantive law.

Status: November 24, 2023

TÜV Rheinland Thailand Ltd.
123/1, Soi Chalongkung 31
Ladkrabang Industrial Estate
Lamplatew, Ladkrabang,
Bangkok 10520, Thailand

Tel. +66 2 326 1333
Fax. +66 2 326 1334-5
Email: info@tha.tuv.com
Web: www.tuv.com

Test Report No. 5873841 Date : 29-Apr-2024 **Page 1 of 4**

Client : Fujipoly (Thailand) Co., Ltd.
55/8 Moo 13 Navanakorn Industrial Estate Phase 4 Phaholyothin Road
Klong Nueng Klong Luang Phathumtanee 12120 Thailand

The following sample(s) was/were submitted and identified by client as:

Sample Name	: Sarcon PG65A Series
Sample Description	: Silicone rubber
Material Type	: Silicone rubber
Manufacturer/Vendor	: Fujipoly (Thailand) Co.,Ltd.
Country of Origin	: Thailand

The following sample(s) was/were identified by SGS as:

SGS Sample No.	: 6183498
Sample Condition	: Sample is contained in a plastic bag.
Quantity Submitted	: 1 pc
Sample Receiving Date	: 25-Apr-2024
Testing Period	: 25-Apr-2024 to 29-Apr-2024

Test Method & Results : Please refer to next page(s).

Signed for and on behalf of
SGS (Thailand) Ltd.

Patcharee T.

Patcharee Treeporncharoen
Laboratory manager - Chemical

"Any holder of this document is advised that should client or third party information be supplied with respect to the goods or sample, SGS may, at its discretion, attached or indicate such information to the report but SGS makes no warranties or accepts no liable for the veracity or lack thereof of such Information."
"This document is issued by the Company subject to its General Conditions of Service printed overleaf, available on request or accessible at http://www.sgs.com/en/Terms-and-Conditions.aspx and, for electronic format documents, subject to Terms and Conditions for Electronic Documents at http://www.sgs.com/en/Terms-and-Conditions/Terms-e-Document.aspx

Attention is drawn to the limitation of liability, indemnification and jurisdiction issues defined therein. Any holder of this document is advised that information contained hereon reflects the Company's findings at the time of its intervention only and within the limits of Client's instructions, if any. The Company's sole responsibility is to its Client and this document does not exonerate parties to a transaction from exercising all their rights and obligations under the transaction documents. This document cannot be reproduced except in full, without prior written approval of the Company. Any unauthorized alteration, forgery or falsification of the content or appearance of this document is unlawful and offenders may be prosecuted to the fullest extent of the law."

Unless otherwise stated the results shown in this test report refer only to the sample(s) received and such sample(s) are retained for 30 days only.

5575554

Test Report No. 5873841 Date : 29-Apr-2024

TEST RESULTS

Analysis	Method	Instrument	Unit	MDL	Result (1)
Halogen	-	-	-	-	-
Halogen - Fluorine (F) (CAS No.: 14762-94-8)	LBCH-08482 based on BS EN 14582 : 2016	Analyzed was performed by Ion Chromatography	mg/kg	50	n.d.
Halogen - Chlorine (Cl) (CAS No.: 22537-15-1)	LBCH-08482 based on BS EN 14582 : 2016	Analyzed was performed by Ion Chromatography	mg/kg	50	n.d.
Halogen - Bromine (Br) (CAS No.: 10097-32-2)	LBCH-08482 based on BS EN 14582 : 2016	Analyzed was performed by Ion Chromatography	mg/kg	50	n.d.
Halogen - Iodine (I) (CAS No.: 14362-44-8)	LBCH-08482 based on BS EN 14582 : 2016	Analyzed was performed by Ion Chromatography	mg/kg	50	n.d.

Note :
(a) mg/kg = ppm
(b) n.d. = not detected
(c) MDL = Method detection limit
(d) Test done on client submitted sample
(e) Result (1) purple rubber

"Any holder of this document is advised that should client or third party information be supplied with respect to the goods or sample, SGS may, at its discretion, attached or indicate such information to the report but SGS makes no warranties or accepts no liable for the veracity or lack thereof of such Information."

"This document is issued by the Company subject to its General Conditions of Service printed overleaf, available on request or accessible at http://www.sgs.com/en/Terms-and-Conditions.aspx and, for electronic format documents, subject to Terms and Conditions for Electronic Documents at http://www.sgs.com/en/Terms-and-Conditions/Terms-e-Document.aspx

Attention is drawn to the limitation of liability, indemnification and jurisdiction issues defined therein. Any holder of this document is advised that information contained hereon reflects the Company's findings at the time of its intervention only and within the limits of Client's instructions, if any. The Company's sole responsibility is to its Client and this document does not exonerate parties to a transaction from exercising all their rights and obligations under the transaction documents. This document cannot be reproduced except in full, without prior written approval of the Company. Any unauthorized alteration, forgery or falsification of the content or appearance of this document is unlawful and offenders may be prosecuted to the fullest extent of the law."

Unless otherwise stated the results shown in this test report refer only to the sample(s) received and such sample(s) are retained for 30 days only.

SGS (Thailand) Limited | Laboratory Services 10, 10/1-4 and 12 Soi Rama III S.59, Chong Nonsi, Yan Nawa, Bangkok
t +66 (0)2 683 05 41, 294 74 85-90 f +66 (0)2 294 74 84, 683 07 58 www.sgs.com
Member of the SGS Group

Analytical flow chart of halogen content

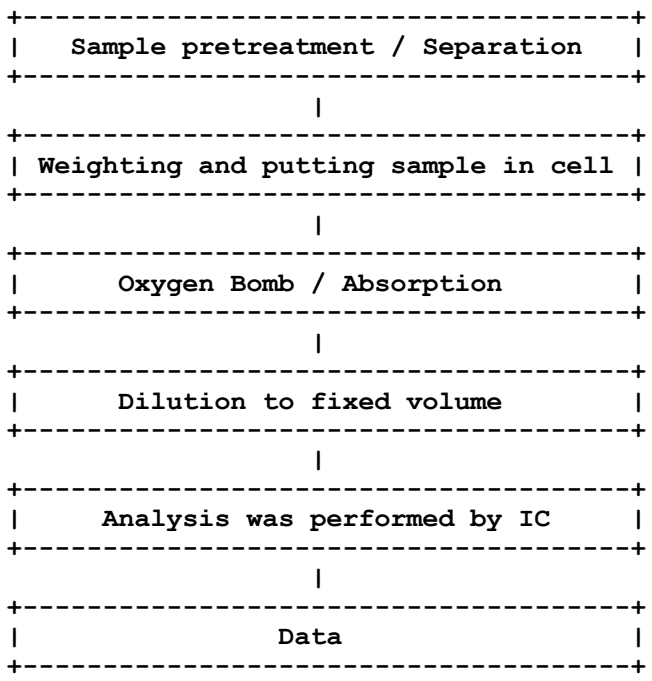

"Any holder of this document is advised that should client or third party information be supplied with respect to the goods or sample, SGS may, at its discretion, attached or indicate such information to the report but SGS makes no warranties or accepts no liable for the veracity or lack thereof of such Information."

"This document is issued by the Company subject to its General Conditions of Service printed overleaf, available on request or accessible at http://www.sgs.com/en/Terms-and-Conditions.aspx and, for electronic format documents, subject to Terms and Conditions for Electronic Documents at http://www.sgs.com/en/Terms-and-Conditions/Terms-e-Document.aspx

Attention is drawn to the limitation of liability, indemnification and jurisdiction issues defined therein. Any holder of this document is advised that information contained hereon reflects the Company's findings at the time of its intervention only and within the limits of Client's instructions, if any. The Company's sole responsibility is to its Client and this document does not exonerate parties to a transaction from exercising all their rights and obligations under the transaction documents. This document cannot be reproduced except in full, without prior written approval of the Company. Any unauthorized alteration, forgery or falsification of the content or appearance of this document is unlawful and offenders may be prosecuted to the fullest extent of the law."

Unless otherwise stated the results shown in this test report refer only to the sample(s) received and such sample(s) are retained for 30 days only.

SGS (Thailand) Limited | Laboratory Services 10, 10/1-4 and 12 Soi Rama III S.59, Chong Nonsi, Yan Nawa, Bangkok
t +66 (0)2 683 05 41, 294 74 85-90 f +66 (0)2 294 74 84, 683 07 58 www.sgs.com

Member of the SGS Group

SAMPLE/ATTACHMENT PICTURE

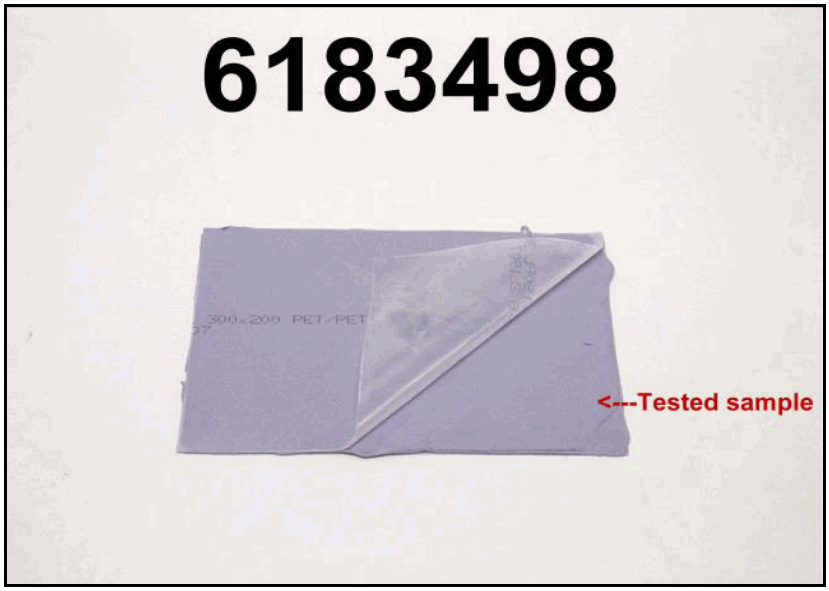

********** End of Report **********

"Any holder of this document is advised that should client or third party information be supplied with respect to the goods or sample, SGS may, at its discretion, attached or indicate such information to the report but SGS makes no warranties or accepts no liable for the veracity or lack thereof of such Information."

"This document is issued by the Company subject to its General Conditions of Service printed overleaf, available on request or accessible at http://www.sgs.com/en/Terms-and-Conditions.aspx and, for electronic format documents, subject to Terms and Conditions for Electronic Documents at http://www.sgs.com/en/Terms-and-Conditions/Terms-e-Document.aspx

Attention is drawn to the limitation of liability, indemnification and jurisdiction issues defined therein. Any holder of this document is advised that information contained hereon reflects the Company's findings at the time of its intervention only and within the limits of Client's instructions, if any. The Company's sole responsibility is to its Client and this document does not exonerate parties to a transaction from exercising all their rights and obligations under the transaction documents. This document cannot be reproduced except in full, without prior written approval of the Company. Any unauthorized alteration, forgery or falsification of the content or appearance of this document is unlawful and offenders may be prosecuted to the fullest extent of the law."

Unless otherwise stated the results shown in this test report refer only to the sample(s) received and such sample(s) are retained for 30 days only.

SGS (Thailand) Limited | Laboratory Services 10, 10/1-4 and 12 Soi Rama III S.59, Chong Nonsi, Yan Nawa, Bangkok
t +66 (0)2 683 05 41, 294 74 85-90 f +66 (0)2 294 74 84, 683 07 58 www.sgs.com

Member of the SGS Group

UL Product iQ®

Model SARCON PG65A-0(h)

File Number: E534843

Yellow Card™ ALSO CERTIFIED TO IEC REQUIREMENTS

COMPANY

FUJIPOLY (THAILAND) CO LTD

55/8 Moo 13
Navanakorn Industrial Estate Phase 4
Phaholyothin Road Klong Nueng
Klong Luang, Pathum Thani 12120 Thailand

MODEL INFO

SARCON PG65A-0(h)

Silicone "Room Temperature Vulcanizing" (RTV), furnished as dry-blended powder
(h) – The flammability test of 0.24 mm and 3.0 mm has been evaluated with 0.50 mm metal backing plate.

FLAMMABILITY PROPERTIES	VALUE	TEST METHOD
Flammability		ANSI/UL 94
0.24 mm, Color: PL	V-0	
3.0 mm, Color: PL	V-0	

ISO/IEC FLAMMABILITY PROPERTIES	VALUE	TEST METHOD
Flammability		IEC 60695-11-10
0.24 mm, Color: PL	V-0	
3.0 mm, Color: PL	V-0	

ELECTRICAL PROPERTIES	VALUE	TEST METHOD
Hot-wire Ignition (HWI) (3.0 mm)	PLC 1	UL 746A
High Amp Arc Ignition (HAI) (3.0 mm)	PLC 0	UL 746A
Comparative Tracking Index (CTI)	PLC 0	UL 746A
High Voltage Arc Tracking Rate (HVTR)	PLC 0	

High Voltage, Low Current Arc Resistance	PLC 0	

THERMAL PROPERTIES	VALUE	TEST METHOD
Relative Thermal Index - Elongation		UL 746B
0.24 mm	150 °C	
3.0 mm	150 °C	
Relative Thermal Index - Mechanical Impact		UL 746B
0.24 mm	150 °C	
3.0 mm	150 °C	
Relative Thermal Index - Mechanical Strength		UL 746B
0.24 mm	150 °C	
3.0 mm	150 °C	

Report Date: 2024-01-10

The appearance of a company's name or product in this database does not in itself assure that products so identified have been manufactured under UL Solutions' Follow - Up Service. Only those products bearing the UL Mark should be considered to be Certified and covered under UL Solutions' Follow - Up Service. Always look for the Mark on the product.

UL Solutions permits the reproduction of the material contained in Product iQ subject to the following conditions: 1. The Guide Information, Assemblies, Constructions, Designs, Systems, and/or Certifications (files) must be presented in their entirety and in a non-misleading manner, without any manipulation of the data (or drawings). 2. The statement "Reprinted from Product iQ with permission from UL Solutions" must appear adjacent to the extracted material. In addition, the reprinted material must include a copyright notice in the following format: "©2024 UL LLC."