SPECIFICATION
FOR
APPROVAL

( ) **Preliminary Specification**
(●) **Final Specification**

Title	21.5" Full HD TFT LCD

BUYER	
MODEL	

SUPPLIER	LG Display Co., Ltd.
*MODEL	LM215WF3
SUFFIX	SLC1

*When you obtain standard approval,
please use the above model name without suffix

Confidential ANF Technology co.,Ltd.(anf_tw)
2016.05.25 11:46 ANF

SIGNATURE	DATE
/	
/	
/	

Please return 1 copy for your confirmation
With your signature and comments.

APPROVED BY	DATE
Y.T. Woo / G.Manager	

REVIEWED BY

B.C. Lee / Manager [C]	
G.N. Jean / Manager [M]	
M.S. Kang / Manager [P]	

PREPARED BY	
B.Y. Ha / Engineer	05.24.2016

IT Development Division 1
LG Display Co., Ltd

2016.05.25 11:46 ANF ANF Technology co.,Ltd.(anf_tw)

Contents

No	ITEM	Page
	COVER	1
	CONTENTS	2
	RECORD OF REVISIONS	3
1	GENERAL DESCRIPTION	4
2	ABSOLUTE MAXIMUM RATINGS	5
3	ELECTRICAL SPECIFICATIONS	6
3-1	ELECTRICAL CHARACTREISTICS	6
3-2	INTERFACE CONNECTIONS	9
3-3	SIGNAL TIMING SPECIFICATIONS	14
3-4	SIGNAL TIMING WAVEFORMS	15
3-5	COLOR INPUT DATA REFERNECE	16
3-6	POWER SEQUENCE	17
3-7	V_{LCD} Power Dip Condition	18
4	OPTICAL SFECIFICATIONS	19
5	MECHANICAL CHARACTERISTICS	25
6	RELIABLITY	28
7	INTERNATIONAL STANDARDS	29
7-1	SAFETY	29
7-2	EMC	29
7-3	ENVIRONMENT	29
8	PACKING	30
8-1	DESIGNATION OF LOT MARK	30
8-2	PACKING FORM	32
9	PRECAUTIONS	34

Confidential
ANF Technology co.,Ltd.(anf_tw)
2016.05.25 11:46 ANF

2016.05.25 11:46 ANF ANF Technology co.,Ltd.(anf_tw)

RECORD OF REVISIONS

Revision No	Revision Date	Page	Description
0.0	Feb. 18. 2016	-	First Draft
0.1	Mar. 23. 2016	4	Change General Features : Power Consumption, Weight
		6	Change Electrical Characteristics : Power Supply Input Current, Power Consumption
		8	Change LED Bar Electrical Characteristics : LED String Current, LED String Voltage, Power Consumption
		14	Change Signal Timing Specifications : Total & Blanking of Horizontal
		19	Change Optical Characteristics : Color Coordinates
		25	Change Mechanical Characteristics : Weight
		27	Change Drawing : COF Area in drawing
		30	Change Packing Form : Package quantity in one box
1.0	May. 23. 2016	8	Change LED Bar Electrical Characteristics: Max. Value of LED String Current
		-	Final Draft

Confidential ANF Technology co.,Ltd.(anf_tw)
2016.05.25 11:46 ANF

2016.05.25 11:46 ANF ANF Technology co.,Ltd.(anf_tw)

1. General Description

LM215WF3 is a Color Active Matrix Liquid Crystal Display with a Light Emitting Diode (White LED) backlight system without LED driver. The matrix employs a-Si Thin Film Transistor as the active element. It is a transmissive type display operating in the normally black mode. It has a 21.5 inch diagonally measured active display area with FHD resolution (1080 vertical by 1920horizontal pixel array) Each pixel is divided into Red, Green and Blue sub-pixels or dots which are arranged in vertical stripes. Gray scale or the brightness of the sub-pixel color is determined with a 8-bit gray scale signal for each dot, thus, presenting a palette of more than 16,7M colors with A-FRC (Advanced Frame Rate Control).
It has been designed to apply the 8Bit 2 port LVDS interface.
It is intended to support displays where high brightness, super wide viewing angle, high color saturation, and high color are important.

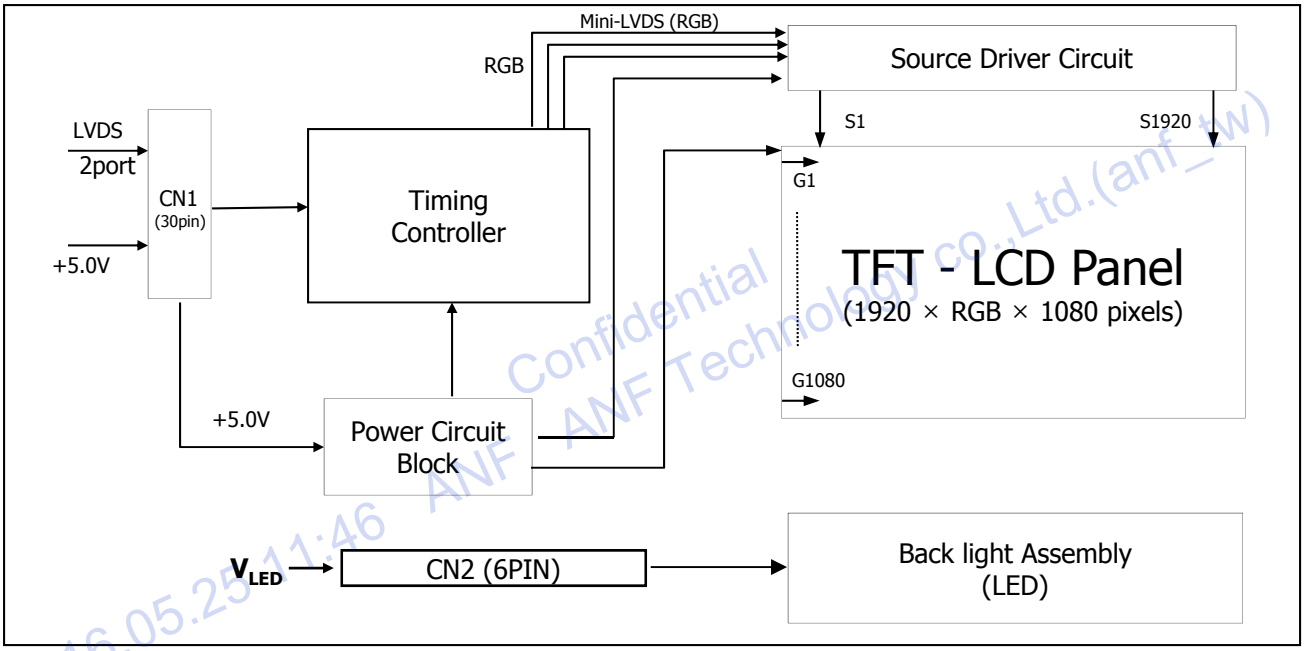

[Figure 1] Block diagram

General Features

Active Screen Size	21.46 inches(545.22mm) diagonal
Outline Dimension	495.6(H) x 292.2(V) x 10.2(D) mm (Typ.)
Pixel Pitch	0.2475 mm x 0.2475mm
Pixel Format	1920 horiz. By 1080 vert. Pixels RGB stripes arrangement
Color Depth	16,7M colors (6bit + A-FRC)
Luminance, White	250 cd/m^2 (Center 1 Point, Typ.)
Viewing Angle(CR>10)	View Angle Free (R/L 178(Typ.), U/D 178(Typ.))
Power Consumption	Total 18.0 Watt (Typ.) (3.5 Watt @V_{LCD}, 14.5 Watt @W/O Driver)
Weight	1185 g (typ.)
Display Operating Mode	Transmissive mode, normally black
Surface Treatment	Hard coating(3H), Anti-Glare treatment of the front polarizer

2016.05.25 11:46 ANF - ANF Technology co.,Ltd.(anf_tw)

2. Absolute Maximum Ratings

The following are maximum values which, if exceeded, may cause faulty operation or damage to the unit.

Table 1. ABSOLUTE MAXIMUM RATINGS

Parameter	Symbol	Values		Units	Notes
		Min	Max		
Power Input Voltage	VLCD	-0.3	6.0	Vdc	at 25 ± 2°C
Operating Temperature	TOP	0	50	°C	1, 2, 3
Storage Temperature	TST	-20	60	°C	
Operating Ambient Humidity	HOP	10	90	%RH	
Storage Humidity	HST	10	90	%RH	

Note : 1. Temperature and relative humidity range are shown in the figure below.
Wet bulb temperature should be 39 °C Max, and no condensation of water.
2. Maximum Storage Humidity is up to 40℃, 70% RH only for 4 corner light leakage Mura.
3. Storage condition is guaranteed under packing condition

FIG.2 Temperature and relative humidity

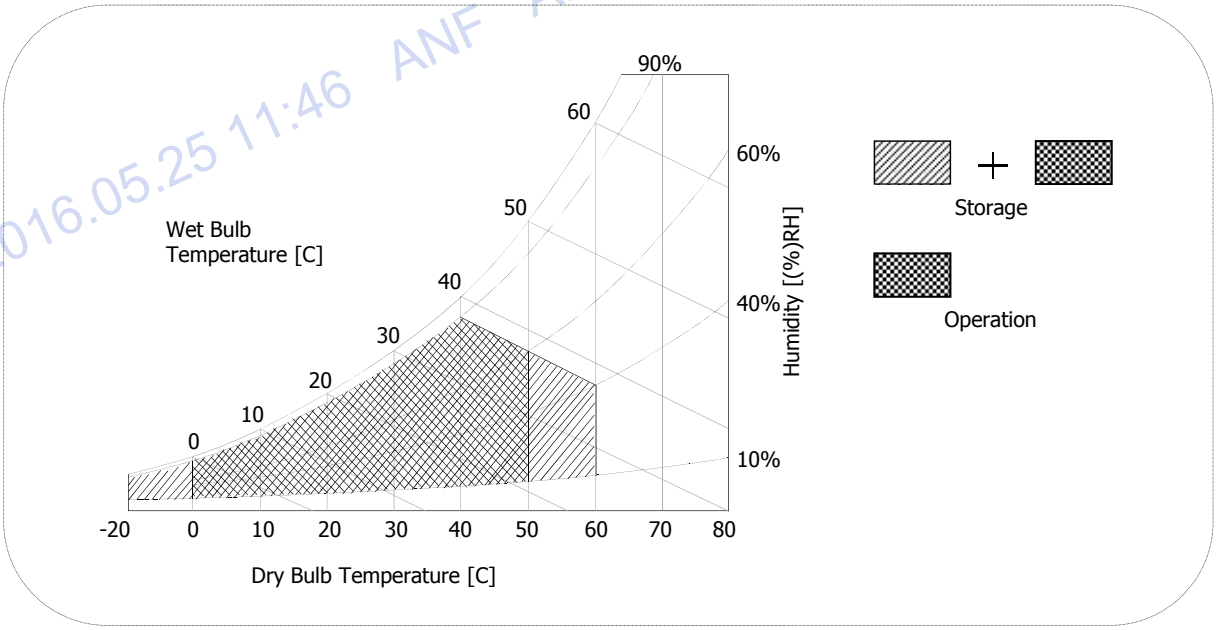

2016.05.25 11:46 ANF ANF Technology co.,Ltd.(anf_tw)
Confidential

2016.05.25 11:46 ANF ANF Technology co.,Ltd.(anf_tw)

3. Electrical Specifications

3-1. Electrical Characteristics

It requires two power inputs. One is employed to power the LCD electronics and to drive the TFT array and liquid crystal. The second input power for the LED/Backlight, is typically generated by a LED Driver. The LED Driver is an external unit to the LCDs.

Table 2-1. ELECTRICAL CHARACTERISTICS

Parameter	Symbol	Values			Unit	Notes
		Min	Typ	Max		
MODULE :						
Power Supply Input Voltage	V_{LCD}	4.5	5.0	5.5	Vdc	
Permissive Power Input Ripple	V_{dRF}			100	mV_{p-p}	1
Differential Impedance	Zm	90	100	110	Ohm	
Power Supply Input Current	I_{LCD}	-	700	805	mA	2
		-	840	966	mA	3
Power Consumption	$P_{C\ TYP}$	-	3.5	4.03	Watt	2
	$P_{C\ MAX}$	-	4.2	4.83	Watt	3
Rush current	I_{RUSH}	-	-	3.0	A	4

Confidential ANF Technology co.,Ltd.(anf_tw)
2016.05.25 11:46 ANF

Note :

1. Permissive power ripple should be measured under V_{LCD} =5.0V, 25°C, fV(frame frequency)=MAX condition and At that time, we recommend the bandwidth configuration of oscilloscope is to be under 20Mhz. See the next page.

2. The specified current and power consumption are under the V_{LCD}=5.0V, 25 ± 2°C,f_V=60Hz condition whereas Typical Power Pattern[Mosaic] shown in the [Figure 3] is displayed.

3. The current is specified at the maximum current pattern.

4. Maximum Condition of Inrush current :
   The duration of rush current is about 5ms and rising time of power Input is 500us ± 20%.(min.).

2016.05.25 11:46 ANF ANF Technology co.,Ltd.(anf_tw)

• **Permissive Power input ripple (**V_{LCD} =5.0V, 25°C, fV(frame frequency)=MAX condition**)**

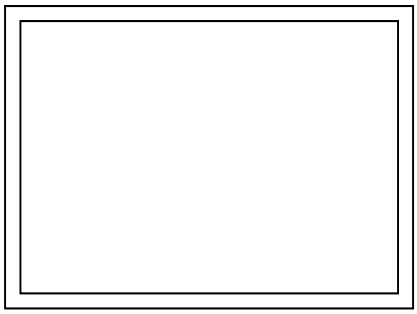

White pattern

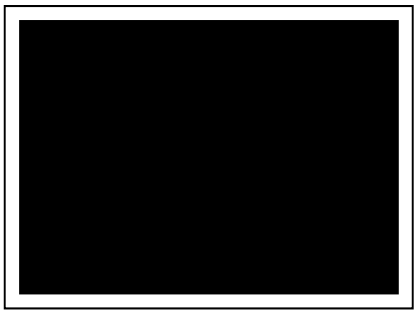

Black pattern

• **Power consumption (**V_{LCD} =5.0V, 25°C, fV (frame frequency=60Hz condition**)**

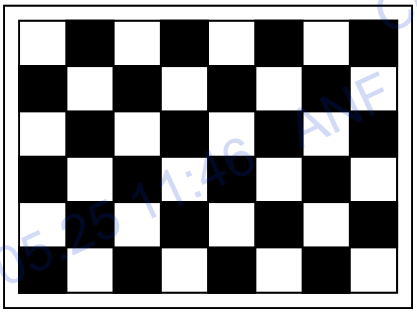

Typical power Pattern

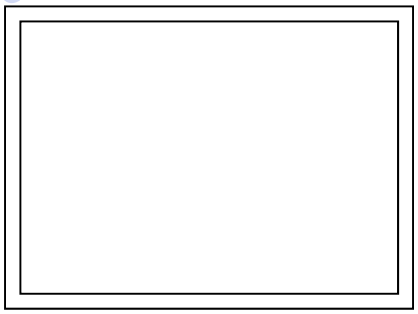

Maximum power Pattern

FIG.3 Mosaic pattern & White Pattern for power consumption measurement

2016.05.25 11:46 ANF Confidential ANF Technology co.,Ltd.(anf_tw)

2016.05.25 11:46 ANF ANF Technology co.,Ltd.(anf_tw)

Table 2-2. LED Bar ELECTRICAL CHARACTERISTICS

Parameter	Symbol	Condition	Values			Unit	Notes
			Min.	Typ.	Max.		
LED :							1,7
LED String Current	Is		-	90	95	mA	2,7
LED String Voltage	Vs		37.7	40.3	42.9	V	3,7
Power Consumption	PBar		-	14.5	15.4	Watt	4,6,7
LED Life Time	LED_LT		30,000	-	-	Hrs	5,7

LED driver design guide

1) The design of the LED driver must have specifications for the LED in LCD Assembly**.**
The performance of the LED in LCM, for example life time or brightness, is extremely influenced by the characteristics of the LED driver.
So all the parameters of an LED driver should be carefully designed and output current should be Constant current control.
Please control feedback current of each string individually to compensate the current variation among the strings of LEDs.
When you design or order the LED driver, please make sure unwanted lighting caused by the mismatch of the LED and the LED driver (no lighting, flicker, etc) never occurs.
When you confirm it, the LCD module should be operated in the same condition as installed in your instrument.

2) LGD recommend that Dimming Control Signal (PWM Signal) should be synchronized with Frame Frequency for Wavy Noise Free.

1. Specified values are for a single LED bar.
2. The specified current is input LED chip 100% duty current.
3. The specified voltage is input LED string and Bar voltage at typical 90 mA 100% duty current.
4. The specified power consumption is input LED bar power consumption at typical 90 mA 100% duty current.
5. The life is determined as the time at which luminance of the LED is 50% compared to that of initial value at the typical LED current on condition of continuous operating at 25 ± 2°C.
6. The LED bar power consumption shown above does not include loss of external driver.
The used LED bar current is the LED typical current.
Min Power Consumption is calculated with PBar = Vs(Min.) x Is(Typ.) x Nstring
Max Power Consumption is calculated with PBar = Vbar(Max.) x Is(Typ) x Nstring
7. LED operating DC Forward Current must not exceed LED Max Ratings at 25 ± 2°C

Confidential ANF Technology co.,Ltd.(anf_tw)
2016.05.25 11:46 ANF ANF Technology co.,Ltd.(anf_tw)

3-2. Interface Connections

3-2-1. LCD Module

- LCD Connector(CN1). : GT103-30S-HF15 (LSM) , IS100-L30O-C23 (UJU)
- Mating Connector : FI-X30C2L (Manufactured by JAE) or Equivalent

Table 3. MODULE CONNECTOR(CN1) PIN CONFIGURATION

No	Symbol	Description	No	Symbol	Symbol
1	FR0M	Minus signal of odd channel 0 (LVDS)	16	SR1P	Plus signal of even channel 1 (LVDS)
2	FR0P	Plus signal of odd channel 0 (LVDS)	17	GND	Ground
3	FR1M	Minus signal of odd channel 1 (LVDS)	18	SR2M	Minus signal of even channel 2 (LVDS)
4	FR1P	Plus signal of odd channel 1 (LVDS)	19	SR2P	Plus signal of even channel 2 (LVDS)
5	FR2M	Minus signal of odd channel 2 (LVDS)	20	SCLKINM	Minus signal of even clock channel (LVDS)
6	FR2P	Plus signal of odd channel 2 (LVDS)	21	SCLKINP	Plus signal of even clock channel (LVDS)
7	GND	Ground	22	SR3M	Minus signal of even channel 3 (LVDS)
8	FCLKINM	Minus signal of odd clock channel (LVDS)	23	SR3P	Plus signal of even channel 3 (LVDS)
9	FCLKINP	Plus signal of odd clock channel (LVDS)	24	GND	Ground
10	FR3M	Minus signal of odd channel 3 (LVDS)	25	NC	No Connection (I2C Serial interface for LCM)
11	FR3P	Plus signal of odd channel 3 (LVDS)	26	NC	No Connection.(I2C Serial interface for LCM)
12	SR0M	Minus signal of even channel 0 (LVDS)	27	PWM_OUT	For Control Burst frequency of Inverter
13	SR0P	Plus signal of even channel 0 (LVDS)	28	V_{LCD}	Power Supply +5.0V
14	GND	Ground	29	V_{LCD}	Power Supply +5.0V
15	SR1M	Minus signal of even channel 1 (LVDS)	30	V_{LCD}	Power Supply +5.0V

Note: 1. All GND(ground) pins should be connected together and to Vss which should also be connected to the LCD's metal frame.
2. All V_{LCD} (power input) pins should be connected together.
3. Input Level of LVDS signal is based on the IEA 664 Standard.
4. PWM_OUT signal controls the burst frequency of a inverter.
This signal is synchronized with vertical frequency.
It's frequency is 3 times of vertical frequency, and it's duty ratio is 50%.
If you don't use this pin, it is no connection.

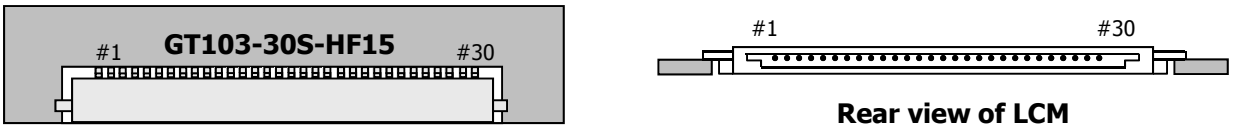

FIG.3 Connector diagram

2016.05.25 11:46 ANF ANF Technology co.,Ltd.(anf_tw)
Confidential ANF Technology co.,Ltd.(anf_tw) 2016.05.25 11:46

Table 4. REQUIRED SIGNAL ASSIGNMENT FOR Flat Link (TI:SN75LVDS83) Transmitter

Pin #	Pin Name	Require Signal	Pin #	Pin Name	Require Signal
1	Vcc	Power Supply for TTL Input	29	GND	Ground pin for TTL
2	D5	TTL Input (R7)	30	D26	TTL Input (DE)
3	D6	TTL Input (R5)	31	T_X CLKIN	TTL Level clock Input
4	D7	TTL Input (G0)	32	PWR DWN	Power Down Input
5	GND	Ground pin for TTL	33	PLL GND	Ground pin for PLL
6	D8	TTL Input (G1)	34	PLL Vcc	Power Supply for PLL
7	D9	TTL Input (G2)	35	PLL GND	Ground pin for PLL
8	D10	TTL Input (G6)	36	LVDS GND	Ground pin for LVDS
9	Vcc	Power Supply for TTL Input	37	TxOUT3+	Positive LVDS differential data output 3
10	D11	TTL Input (G7)	38	TxOUT3−	Negative LVDS differential data output 3
11	D12	TTL Input (G3)	39	T_X CLKOUT+	Positive LVDS differential clock output
12	D13	TTL Input (G4)	40	T_X CLKOUT−	Negative LVDS differential clock output
13	GND	Ground pin for TTL	41	T_X OUT2+	Positive LVDS differential data output 2
14	D14	TTL Input (G5)	42	T_X OUT2−	Negative LVDS differential data output 2
15	D15	TTL Input (B0)	43	LVDS GND	Ground pin for LVDS
16	D16	TTL Input (B6)	44	LVDS Vcc	Power Supply for LVDS
17	Vcc	Power Supply for TTL Input	45	T_X OUT1+	Positive LVDS differential data output 1
18	D17	TTL Input (B7)	46	T_X OUT1−	Negative LVDS differential data output 1
19	D18	TTL Input (B1)	47	T_X OUT0+	Positive LVDS differential data output 0
20	D19	TTL Input (B2)	48	T_X OUT0−	Negative LVDS differential data output 0
21	GND	Ground pin for TTL Input	49	LVDS GND	Ground pin for LVDS
22	D20	TTL Input (B3)	50	D27	TTL Input (R6)
23	D21	TTL Input (B4)	51	D0	TTL Input (R0)
24	D22	TTL Input (B5)	52	D1	TTL Input (R1)
25	D23	TTL Input (RSVD)	53	GND	Ground pin for TTL
26	Vcc	Power Supply for TTL Input	54	D2	TTL Input (R2)
27	D24	TTL Input (HSYNC)	55	D3	TTL Input (R3)
28	D25	TTL Input (VSYNC)	56	D4	TTL Input (R4)

Notes : 1. Refer to LVDS Transmitter Data Sheet for detail descriptions.
2. 7 means MSB and 0 means LSB at R,G,B pixel data

Confidential ANF Technology co.,Ltd.(anf_tw)
2016.05.25 11:46 ANF

2016.05.25 11:46 ANF ANF Technology co.,Ltd.(anf_tw)

LVDS Input characteristics

1. DC Specification

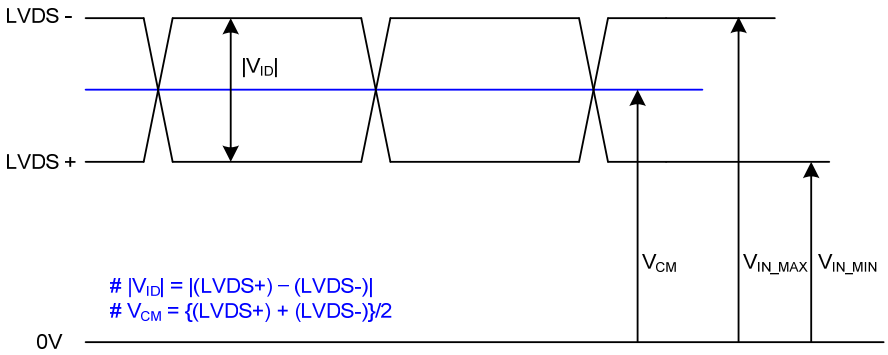

Description	Symbol	Min	Max	Unit	Notes
LVDS Differential Voltage	$\|V_{ID}\|$	200	600	mV	-
LVDS Common mode Voltage	V_{CM}	1.0	1.5	V	-
LVDS Input Voltage Range	V_{IN}	0.7	1.8	V	-
Change in common mode Voltage	ΔV_{CM}	-	250	mV	-

2. AC Specification

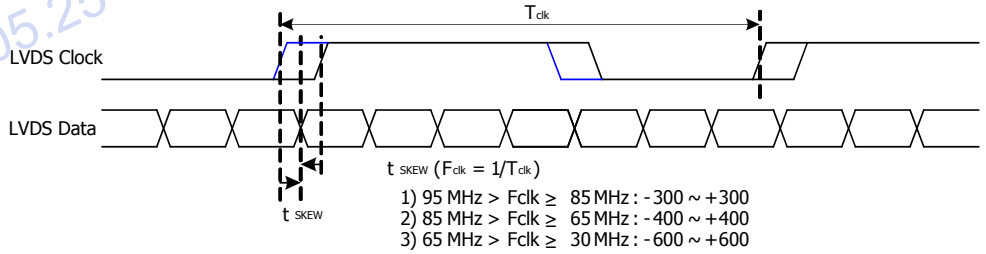

Description	Symbol	Min	Max	Unit	Notes
LVDS Clock to Data Skew Margin	t_{SKEW}	- 300	+ 300	ps	95MHz > Fclk ≥ 85MHz
	t_{SKEW}	- 400	+ 400	ps	85MHz > Fclk ≥ 65MHz
	t_{SKEW}	- 600	+ 600	ps	65MHz > Fclk ≥ 30MHz
LVDS Clock to Clock Skew Margin (Even to Odd)	t_{SKEW_EO}	- 1/7	+ 1/7	T_{clk}	-

2016.05.25 11:46 ANF ANF Technology co.,Ltd.(anf_tw)
Confidential

2016.05.25 11:46 ANF ANF Technology co.,Ltd.(anf_tw)

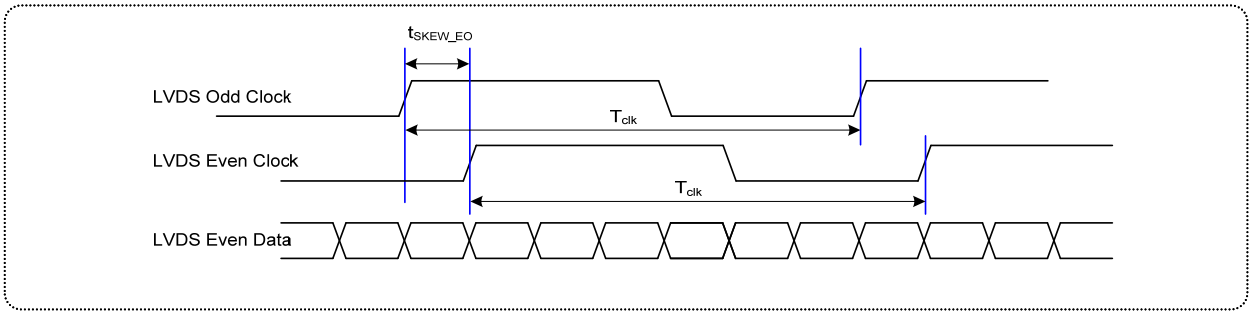

< Clock skew margin between channel >

3. Data Format

1) LVDS 2 Port

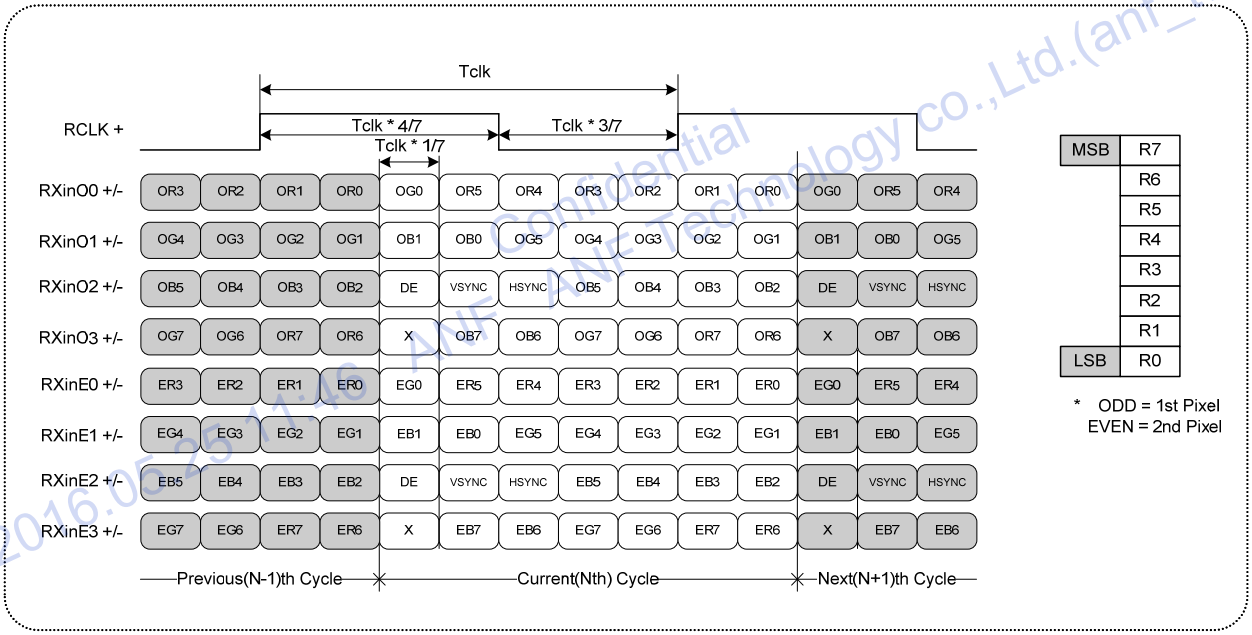

< LVDS Data Format >

2016.05.25 11:46 ANF Confidential ANF Technology co.,Ltd.(anf_tw)

2016.05.25 11:46 ANF ANF Technology co.,Ltd.(anf_tw)

Table 5. BACKLIGHT CONNECTOR PIN CONFIGURATION(CN2)

The LED interface connector is a model 10019HR-H06B manufactured by YEONHO.
The pin configuration for the connector is shown in the table below.

Pin	Symbol	Description	Notes
1	FB1	Channel1 Current Feedback	
2	FB2	Channel2 Current Feedback	
3	VLED	LED Power Supply	
4	VLED	LED Power Supply	
5	FB3	Channel3 Current Feedback	
6	FB4	Channel4 Current Feedback	

Confidential ANF Technology co.,Ltd.(anf_tw)
2016.05.25 11:46 ANF

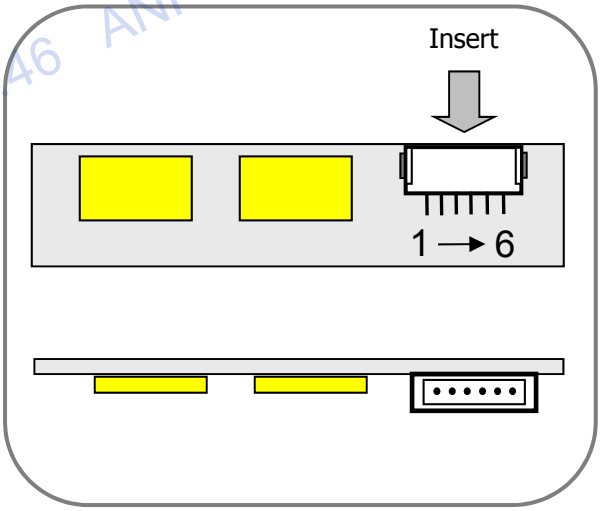

[Figure 5] Backlight connector View

2016.05.25 11:46 ANF ANF Technology co.,Ltd.(anf_tw)

3-3. Signal Timing Specifications

This is signal timing required at the input of the TMDS transmitter. All of the interface signal timing should be satisfied with the following specifications for it's proper operation.

Table 6. TIMING TABLE

ITEM	Symbol		Min	Typ	Max	Unit	Note
DCLK	Period	t_{CLK}	11.43	13.89	15.38	ns	
	Frequency	-	60	72	87.5	MHz	
Horizontal	total	t_{HP}	1024	1088	1120	t_{CLK}	
	Frequency	f_H	64	66	83	KHz	
	Blanking		64	128	160	t_{CLK}	
	valid	t_{WH}	960	960	960	$t_{CLK/2}$	
Vertical	total	t_{VP}	1090	1100	1160	t_{HP}	
	Frequency	f_V	50	60	75	Hz	
	Blanking		10	20	80	t_{HP}	
	valid	t_{WV}	1080	1080	1080	t_{HP}	

Note:

1. DE Only mode operation. The input of Hsync & Vsync signal does not have an effect on LCD normal operation.
2. The performance of the electro-optical characteristics may be influenced by variance of the vertical refresh rates.
3. Horizontal period should be even.

2016.05.25 11:46 ANF Confidential ANF Technology co.,Ltd.(anf_tw)

2016.05.25 11:46 ANF ANF Technology co.,Ltd.(anf_tw)

3-4. Signal Timing Waveforms

1. DCLK , DE, DATA waveforms

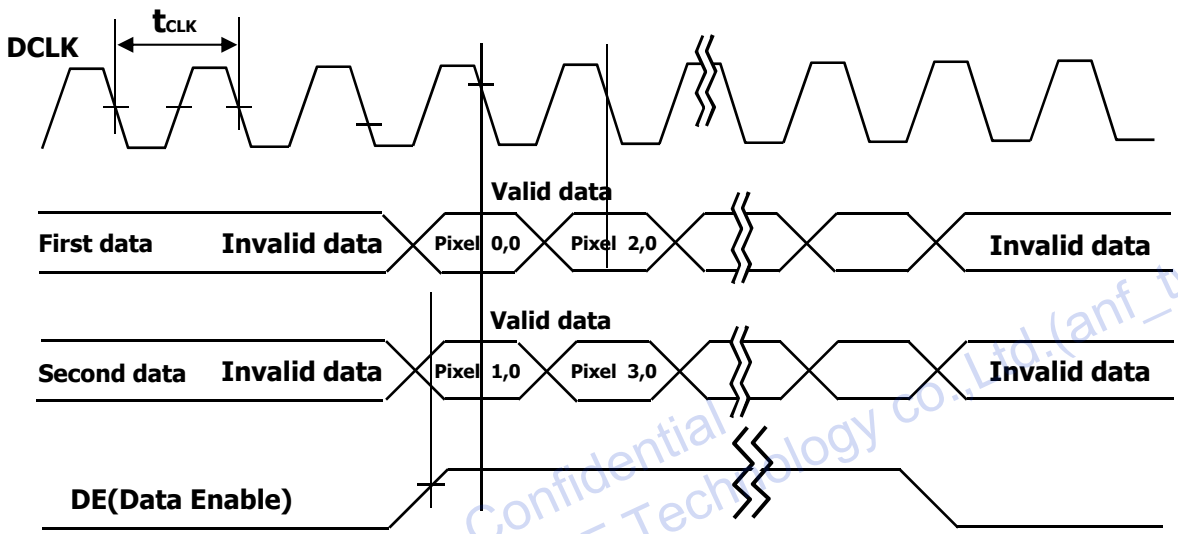

2. Horizontal waveform

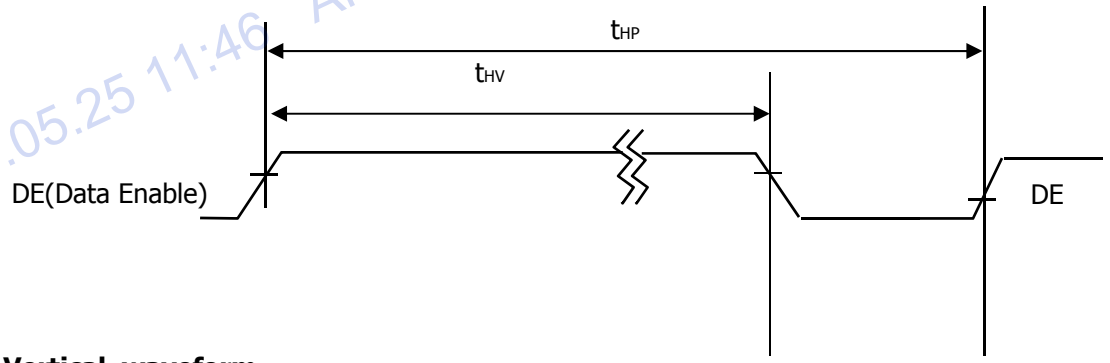

3. Vertical waveform

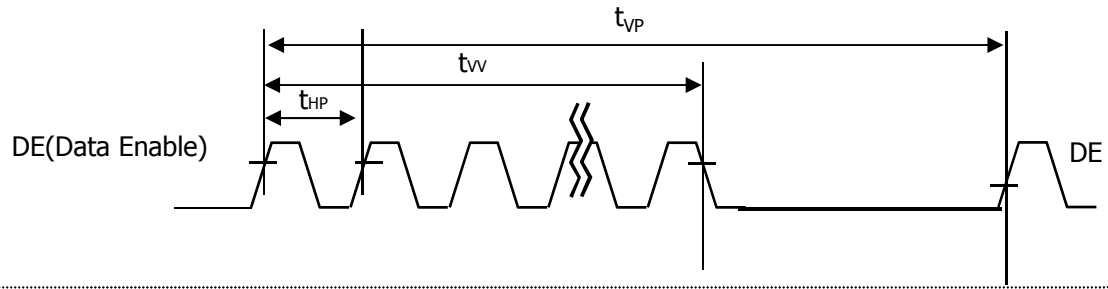

Confidential ANF ANF Technology co.,Ltd.(anf_tw)
2016.05.25 11:46 ANF

2016.05.25 11:46 ANF ANF Technology co.,Ltd.(anf_tw)

3-5. Color Input Data Reference

The Brightness of each primary color(red,green,blue) is based on the 8-bit gray scale data input for the color; the higher the binary input, the brighter the color. The table below provides a reference for color versus data input.

Table 7. COLOR DATA REFERENCE

Color		Input Color Data																							
		RED								GREEN								BLUE							
		MSB							LSB	MSB							LSB	MSB							LSB
		R7	R6	R5	R4	R3	R2	R1	R0	G7	G6	G5	G4	G3	G2	G1	G0	B7	B6	B5	B4	B3	B2	B1	B0
Basic Color	Black	0	0	0	0	0	0	0	0	0	0	0	0	0	0	0	0	0	0	0	0	0	0	0	0
	Red (255)	1	1	1	1	1	1	1	1	0	0	0	0	0	0	0	0	0	0	0	0	0	0	0	0
	Green (255)	0	0	0	0	0	0	0	0	1	1	1	1	1	1	1	1	0	0	0	0	0	0	0	0
	Blue (255)	0	0	0	0	0	0	0	0	0	0	0	0	0	0	0	0	1	1	1	1	1	1	1	1
	Cyan	0	0	0	0	0	0	0	0	1	1	1	1	1	1	1	1	1	1	1	1	1	1	1	1
	Magenta	1	1	1	1	1	1	1	1	0	0	0	0	0	0	0	0	1	1	1	1	1	1	1	1
	Yellow	1	1	1	1	1	1	1	1	1	1	1	1	1	1	1	1	0	0	0	0	0	0	0	0
	White	1	1	1	1	1	1	1	1	1	1	1	1	1	1	1	1	1	1	1	1	1	1	1	1
RED	RED (000) Dark	0	0	0	0	0	0	0	0	0	0	0	0	0	0	0	0	0	0	0	0	0	0	0	0
	RED (001)	0	0	0	0	0	0	0	1	0	0	0	0	0	0	0	0	0	0	0	0	0	0	0	0
	...				...								...								...				
	RED (254)	1	1	1	1	1	1	1	0	0	0	0	0	0	0	0	0	0	0	0	0	0	0	0	0
	RED (255)	1	1	1	1	1	1	1	1	0	0	0	0	0	0	0	0	0	0	0	0	0	0	0	0
GREEN	GREEN (000) Dark	0	0	0	0	0	0	0	0	0	0	0	0	0	0	0	0	0	0	0	0	0	0	0	0
	GREEN (001)	0	0	0	0	0	0	0	0	0	0	0	0	0	0	0	1	0	0	0	0	0	0	0	0
	...				...								...								...				
	GREEN (254)	0	0	0	0	0	0	0	0	1	1	1	1	1	1	1	0	0	0	0	0	0	0	0	0
	GREEN (255)	0	0	0	0	0	0	0	0	1	1	1	1	1	1	1	1	0	0	0	0	0	0	0	0
BLUE	BLUE (000) Dark	0	0	0	0	0	0	0	0	0	0	0	0	0	0	0	0	0	0	0	0	0	0	0	0
	BLUE (001)	0	0	0	0	0	0	0	0	0	0	0	0	0	0	0	0	0	0	0	0	0	0	0	1
	...				...								...								...				
	BLUE (254)	0	0	0	0	0	0	0	0	0	0	0	0	0	0	0	0	1	1	1	1	1	1	1	0
	BLUE (255)	0	0	0	0	0	0	0	0	0	0	0	0	0	0	0	0	1	1	1	1	1	1	1	1

Confidential
2016.05.25 11:46 ANF ANF Technology co.,Ltd.(anf_tw)

2016.05.25 11:46 ANF ANF Technology co.,Ltd.(anf_tw)

3-6. Power Sequence

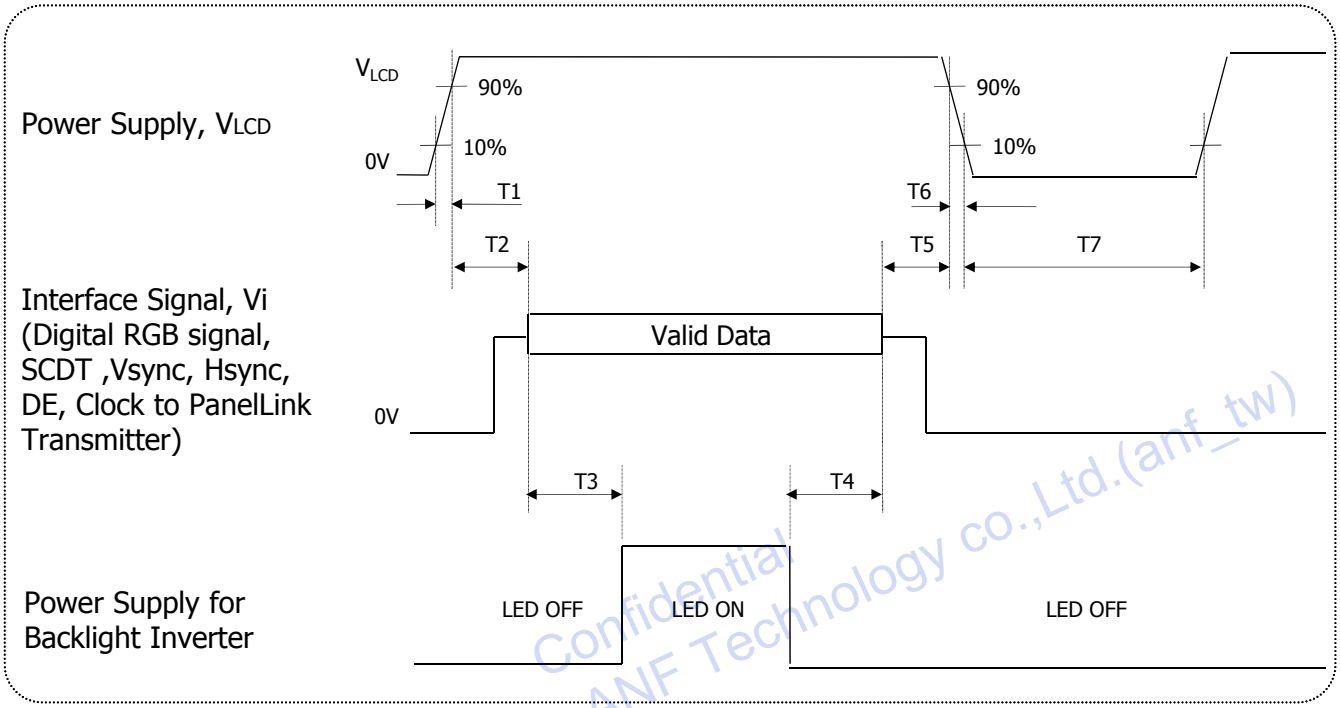

FIG.5 Power sequence

Table 8. POWER SEQUENCE

Parameter	Values			Units
	Min	Typ	Max	
T1	0.5	-	10	ms
T2	0.01	-	50	ms
T3	500	-	-	ms
T4	200	-	-	ms
T5	0.01	-	50	ms
T7	1000		-	ms

Notes : 1. Please avoid floating state of interface signal at invalid period.
2. When the interface signal is invalid, be sure to pull down the power supply for LCD V_{LCD} to 0V.
3. LED power must be turn on after power supply for LCD and interface signal are valid.

2016.05.25 11:46 ANF ANF Technology co.,Ltd.(anf_tw)
Confidential

2016.05.25 11:46 ANF ANF Technology co.,Ltd.(anf_tw)

3-7. V_{LCD} Power Dip Condition

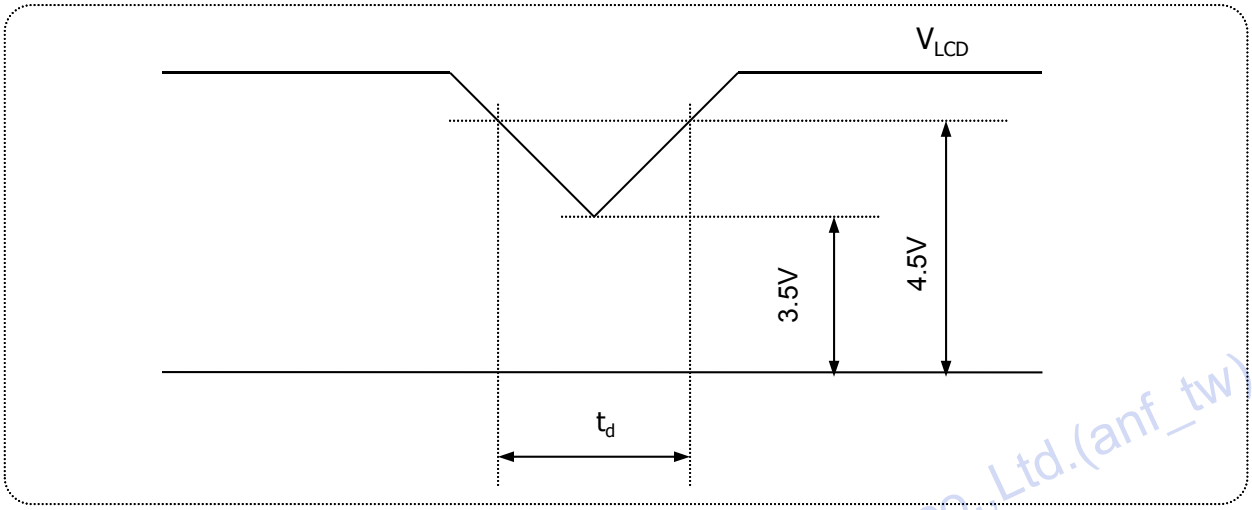

FIG.6 Power dip condition

Confidential
ANF ANF Technology co.,Ltd.(anf_tw)
2016.05.25 11:46 ANF

1) Dip condition

$3.5V \leq V_{LCD} < 4.5V$, $t_d \leq 20ms$

2) $V_{LCD} < 3.5V$

V_{LCD}-dip conditions should also follow the Power On/Off conditions for supply voltage.

2016.05.25 11:46 ANF ANF Technology co.,Ltd.(anf_tw)

4. Optical Specifications

Optical characteristics are determined after the unit has been 'ON' for approximately 30 minutes in a dark environment at 25±2°C. The values specified are at an approximate distance 50cm from the LCD surface at a viewing angle of Φ and θ equal to 0 ° and aperture 1 degree.

FIG. 1 presents additional information concerning the measurement equipment and method.

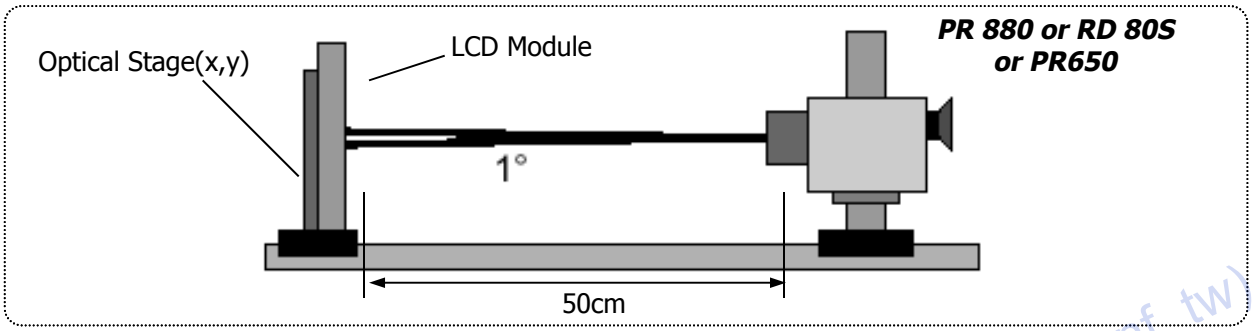

FIG.7 Optical Characteristic Measurement Equipment and Method

Table 9. OPTICAL CHARACTERISTICS (Ta=25 °C, V_{LCD}=5V, f_V=60Hz Dclk=144MHz, Is=90mA)

Parameter		Symbol	Values			Units	Notes
			Min	Typ	Max		
Contrast Ratio		CR	600	1000	-		1
Surface Luminance, white		L_{WH}	200	250	-	cd/m²	2
Luminance Variation		δ_{WHITE}	75	-	-	%	3
Response Time	Gray To Gray	T_{GTG_AVR}	-	14	25	ms	4
Color Coordinates [CIE1931] ***(By PR650)***	RED	Rx	Typ -0.03	0.655	Typ +0.03		
		Ry		0.336			
	GREEN	Gx		0.320			
		Gy		0.616			
	BLUE	Bx		0.150			
		By		0.054			
	WHITE	Wx		0.313			
		Wy		0.329			
Color Shift (Avg. Δu'v' < 0.02))	Horizontal	θ_{CST_H}	-	100	-	Degree	5
	Vertical	θ_{CST_V}	-	140	-		
Viewing Angle (CR>10)							
General	Horizontal	θ_H	170	178	-	Degree	6
	Vertical	θ_V	170	178	-		
GSR @ 60dgree (Gamma shift rate)	Horizontal	δ_{Gamma_H}	-	-	20	%	7
	Vertical	δ_{Gamma_V}	-	-	20		
Gray Scale		-		2.2			8

2016.05.25 11:46 ANF ANF Technology co.,Ltd.(anf_tw)

Notes 1. Contrast Ratio(CR) is defined mathematically as : ***(By PR880)***

$$\text{Contrast Ratio} = \frac{\text{Surface Luminance with all white pixels}}{\text{Surface Luminance with all black pixels}}$$

It is measured at center point(Location P1)

2. Surface luminance(L_{WH})is luminance value at Center 1 point(P1) across the LCD surface 50cm from the surface with all pixels displaying white. For more information see FIG.8 (By PR880)

3. The variation in surface luminance , δ WHITE is defined as : ***(By PR880)***

$$\delta_{WHITE} = \frac{\text{Minimum}(L_{P1}, L_{P2}, \ldots . L_{P9})}{\text{Maximum}\,(L_{P1}, L_{P2}, \ldots . L_{P9})} \times 100$$

Where L1 to L9 are the luminance with all pixels displaying white at 9 locations.
For more information see FIG.8

4. Gray to gray response time is the time required for the display to transition from gray to gray. For additional information see Table 10. ***(By RD80S)***

5. Color shift is the angle at which the average color difference for all Macbeth is lower than 0.02. For more information see FIG.9 ***(By EZ Contrast)***
- Color difference (Δu'v')

$$u' = \frac{4x}{-2x+12y+3} \qquad v' = \frac{9y}{-2x+12y+3} \qquad \Delta u'v' = \sqrt{(u'_1 - u'_2)^2 + (v'_1 - v'_2)^2}$$

$$Avg(\Delta u'v') = \frac{\sum_{i=1}^{24} (\Delta u'v')i}{24}$$

u'1, v'1 : u'v' value at viewing angle direction
u'2, v'2 : u'v' value at front (θ=0)
i : Macbeth chart number (Define 23 page)

- Pattern size : 25% Box size
- Viewing angle direction of color shift : Horizontal, Vertical

6. Viewing angle is the angle at which the contrast ratio is greater than 10. The angles are determined for the horizontal or x axis and the vertical or y axis with respect to the z axis which is normal to the LCD surface. For more information see FIG.10 ***(By PR880)***

7. GSR is the rate of gamma shift at up, down, left and right 60 degree viewing angle compare with center gamma. For more information see FIG.11 and FIG.12 ***(By EZ Contrast)***
- GSR (δ_{Gamma}) is defined as :

.

$$GSR = \left(1 - \frac{\text{View angle Gamma Value (Up, Down, Reft, Light 60 Degree)}}{\text{Center Gamma Value (0 Degree)}}\right) \times 100$$

2016.05.25 11:46 ANF ANF Confidential ANF Technology co.,Ltd.(anf_tw)

2016.05.25 11:46 ANF ANF Technology co.,Ltd.(anf_tw)

Notes 8. Gamma Value is approximately 2.2. For more information see Table 11.

Measuring point for surface luminance & measuring point for luminance variation.

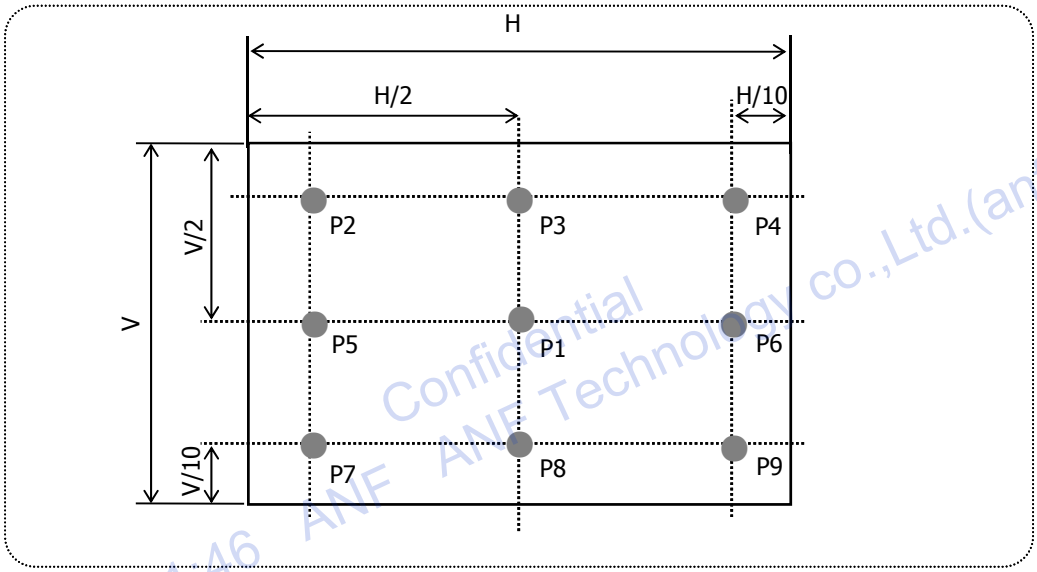

FIG.8 Measure Point for Luminance

The Gray to Gray response time is defined as the following figure and shall be measured by switching the input signal for "Gray To Gray ".

- Gray step : 5 Step
- TGTG_AVR is the total average time at rising time and falling time for "Gray To Gray ".
- if system use ODC (Over Driving Circuit) function, Gray to Gary response time may be 5ms~8ms GtG
  * it depends on Overshoot rate.

Table. 10 GTG Gray Table

Gray to Gray		Rising Time				
		G255	G191	G127	G63	G0
Falling Time	G255					
	G191					
	G127					
	G63					
	G0					

2016.05.25 11:46 ANF ANF Technology co.,Ltd.(anf_tw)
Confidential
ANF Technology co.,Ltd.(anf_tw)

Response time is defined as the following figure and shall be measured by switching the input signal for "Gray(N)" and "Black or White".

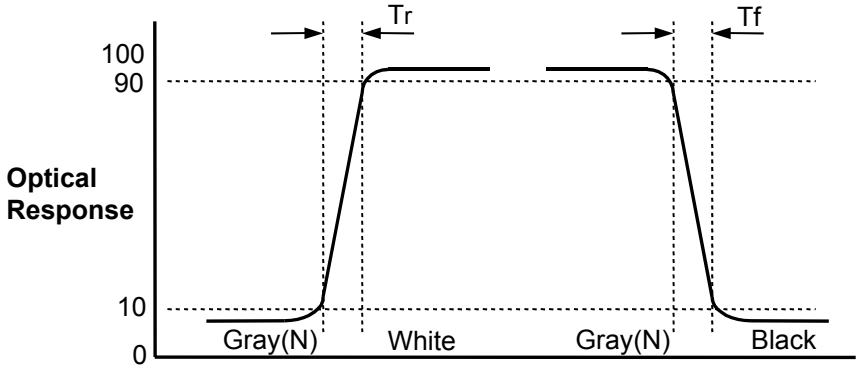

N = 0(Black)~255(White)

Color shift is defined as the following test pattern and color.

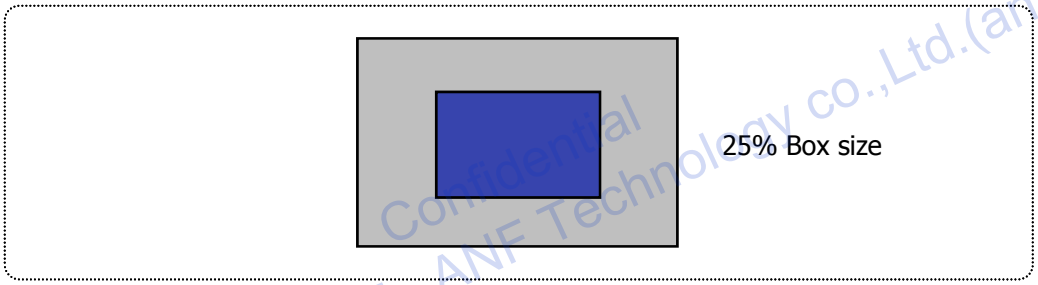

FIG.9 Color Shift Test Pattern

Average RGB values in Bruce RGB for Macbeth Chart

	Dark skin (i=1)	Light skin	Blue sky	Foliage	Blue flower	Bluish green
R	98	206	85	77	129	114
G	56	142	112	102	118	199
B	45	123	161	46	185	178
	Orange	Purplish blue	Moderate red	Purple	Yellow green	Orange yellow
R	219	56	211	76	160	230
G	104	69	67	39	193	162
B	24	174	87	86	58	29
	Blue	Green	Red	Yellow	Magenta	Cyan
R	26	72	197	241	207	35
G	32	148	27	212	62	126
B	145	65	37	36	151	172
	White	Neutral 8	Neutral 6.5	Neutral 5	Neutral 3.5	Black
R	240	206	155	110	63	22
G	240	206	155	110	63	22
B	240	206	155	110	63	22

2016.05.25 11:46 ANF ANF Technology co.,Ltd.(anf_tw)
Confidential

2016.05.25 11:46 ANF ANF Technology co.,Ltd.(anf_tw)

Dimension of viewing angle range.

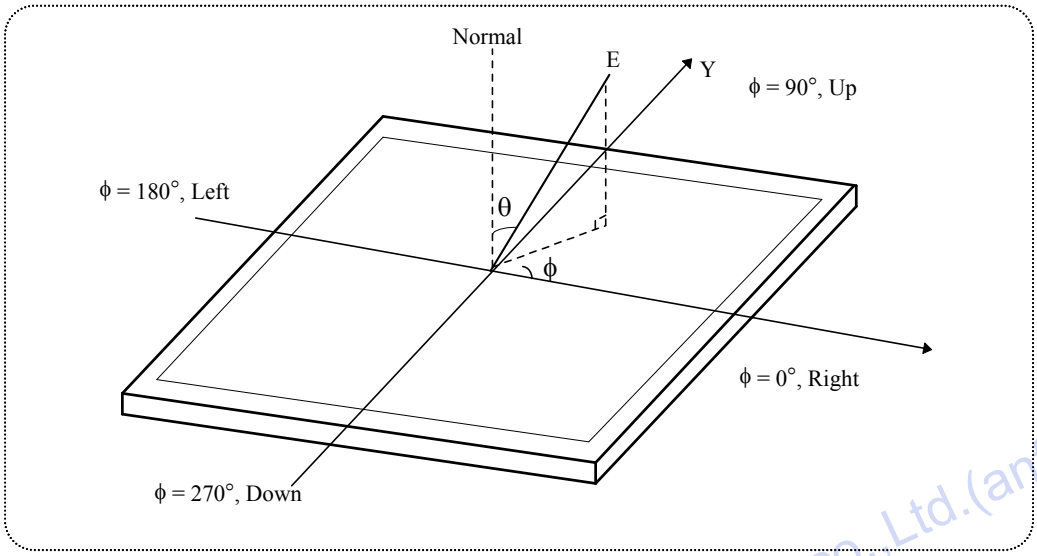

FIG.10 Viewing angle

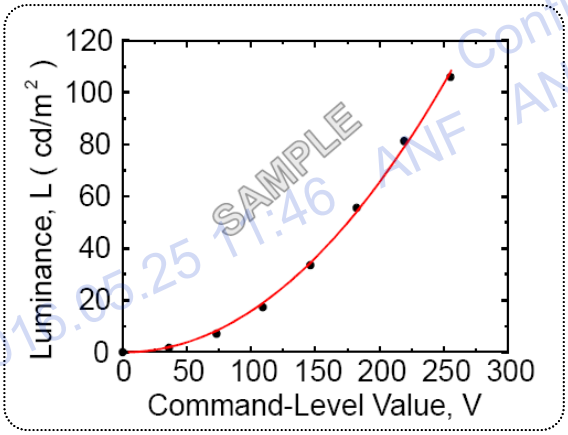

FIG.11 Sample Luminance vs. gray scale (using a 256 bit gray scale)

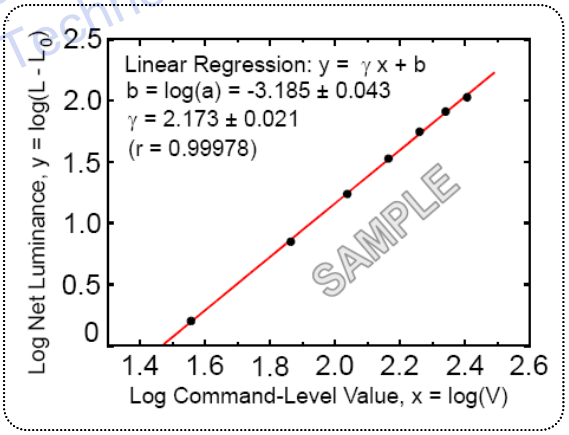

FIG.12 Sample Log-log plot of luminance vs. gray scale

$$L = aV^{r} + L_b$$

$$\log(L - L_b) = r\log(V) + \log(a)$$

Here the Parameter α and γ relate the signal level V to the luminance L.
The GAMMA we calculate from the log-log representation (FIG.11)

2016.05.25 11:46 ANF ANF Technology co.,Ltd.(anf_tw)
Confidential

Table 11. Gray Scale Specification

Gray Level	Relative Luminance [%] (Typ.)
0	0.11
31	1.08
63	4.72
95	11.49
127	21.66
159	35.45
191	53.00
223	74.48
255	100

Confidential
ANF Technology co.,Ltd.(anf_tw)
2016.05.25 11:46 ANF

2016.05.25 11:46 ANF ANF Technology co.,Ltd.(anf_tw)

5. Mechanical Characteristics

The contents provide general mechanical characteristics. In addition the figures in the next page are detailed mechanical drawing of the LCD.

Outline Dimension	Horizontal	495.6mm
	Vertical	292.2mm
	Depth	10.2mm
Bezel Area	Horizontal	478.8mm
	Vertical	271.3mm
Active Display Area	Horizontal	475.2mm
	Vertical	267.3mm
Weight	Typ : 1185 g , Max : 1245 g	
Surface Treatment	Hard coating(3H) Anti-Glare treatment of the front polarizer	

Notes : Please refer to a mechanic drawing in terms of tolerance at the next page.

Confidential
ANF Technology co.,Ltd.(anf_tw)
2016.05.25 11:46 ANF

2016.05.25 11:46 ANF ANF Technology co.,Ltd.(anf_tw)

<FRONT VIEW>

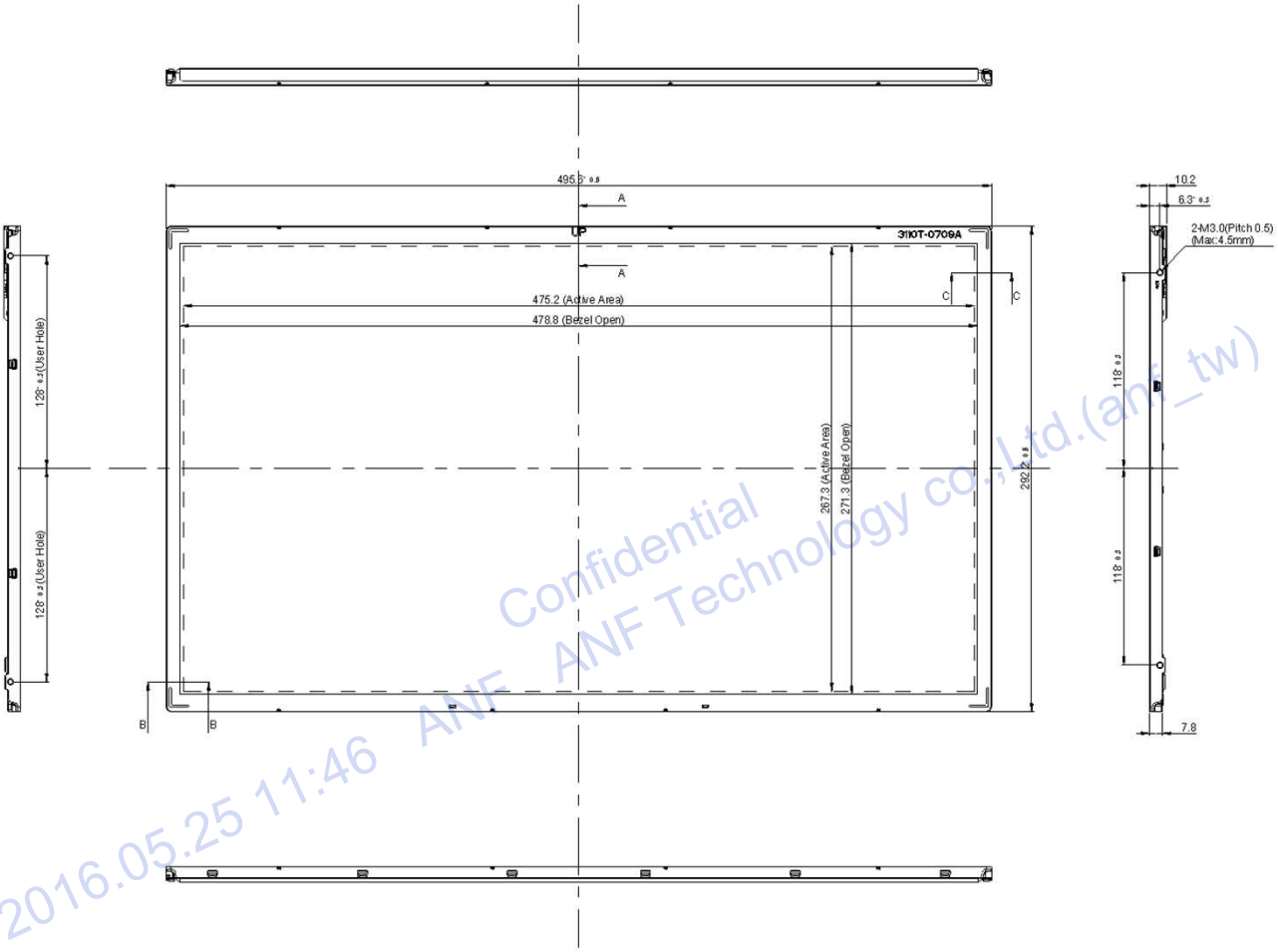

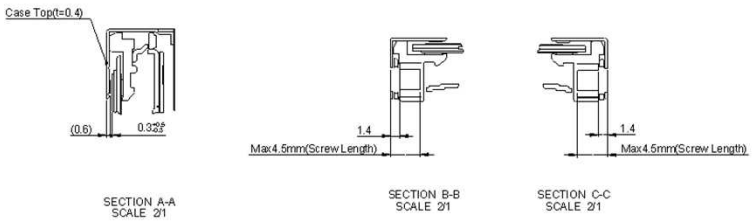

SECTION A-A
SCALE 2/1

SECTION B-B
SCALE 2/1

SECTION C-C
SCALE 2/1

Confidential
ANF ANF Technology co.,Ltd.(anf_tw)
2016.05.25 11:46 ANF

2016.05.25 11:46 ANF ANF Technology co.,Ltd.(anf_tw)

<REAR VIEW>

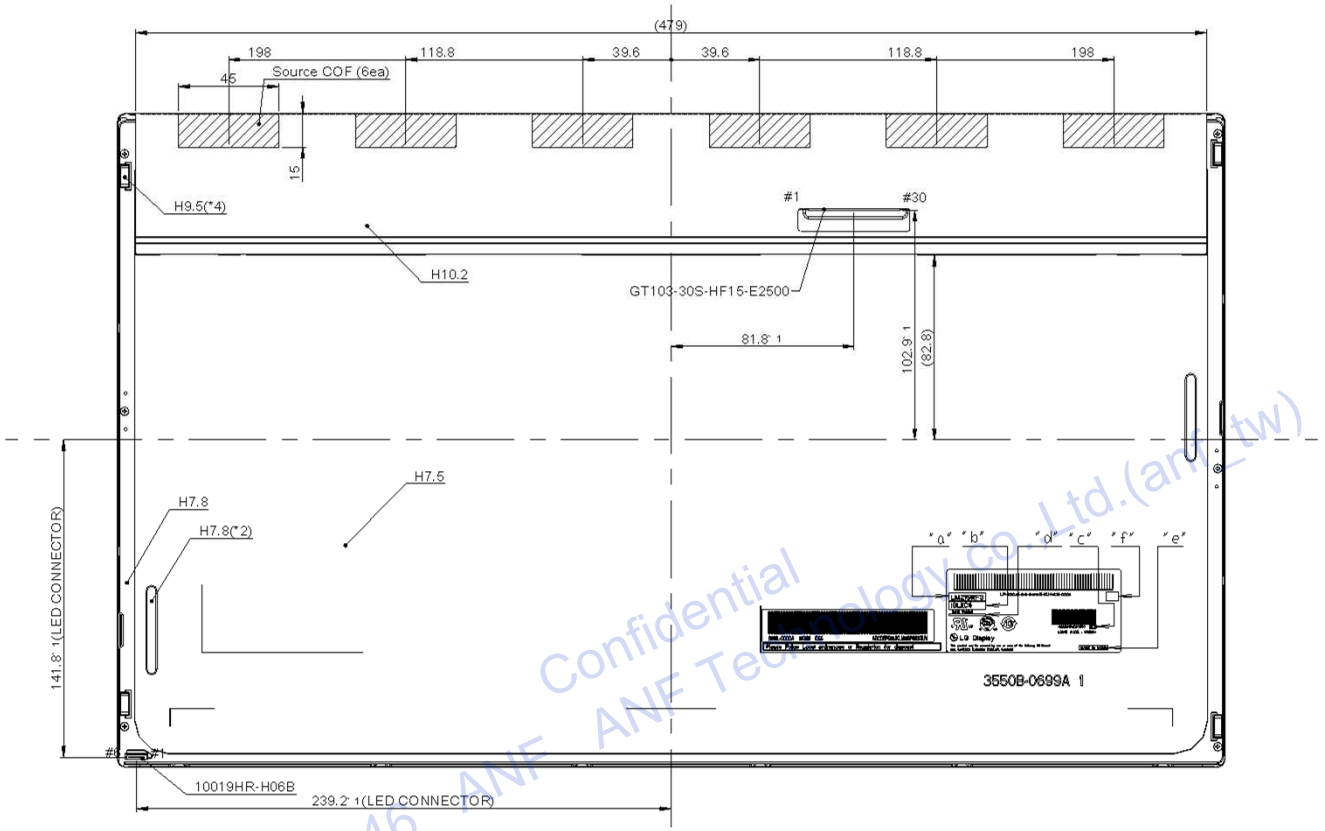

Confidential
ANF ANF Technology co.,Ltd.(anf_tw)
2016.05.25 11:46 ANF ANF Technology co.,Ltd.(anf_tw)

Notes
1. I/F Connector Specification : GT103-30S-HF15-E2500(LS Cable)
2. LED Connector specification
- 10019HR-H06B(Yeonho), 6PIN
3. Torque of user hole : 2.5~3.5 kgf-cm
4. Tilt and partial disposition tolerance of display area as following
(1) Y-Direction : IA-BI ≦1.0
(2) X-Direction : IC-DI ≦ 1.0

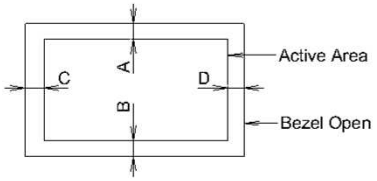

5. Unspecified tolerances to be ± 0.5mm
6. The COF area is weak & sensitive, So, please don't press the COF area.

LGD Highly recommendation :
As The IPS panel is sensitive & slim, please recommend the metal frame of the system supports the panel by the double side-mount.

2016.05.25 11:46 ANF ANF Technology co.,Ltd.(anf_tw)

6. Reliability

Environment test condition

No	Test Item	Condition
1	High temperature storage test	Ta= 60°C 240h
2	Low temperature storage test	Ta= -20°C 240h
3	High temperature operation test	Ta= 50°C 50%RH 240h
4	Low temperature operation test	Ta= 0°C 240h
5	Humidity condition Operation	Ta= 40 °C ,90%RH
6	Altitude operating storage / shipment	 0 - 10,000 feet(3,048m) 0 - 40,000 feet(12,192m)
7	Maximum Storage Humidity for 4 corner light leakage Mura.	Max 70%RH , Ta=40℃

{ Result Evaluation Criteria }

1. TFT-LCD panels test should take place after cooling enough at room temperature.
2. In the standard condition, there should be no particular problems that may affect the display function.

※. T_a= Ambient Temperature

Confidential
ANF ANF Technology co.,Ltd.(anf_tw)
2016.05.25 11:46

2016.05.25 11:46 ANF ANF Technology co.,Ltd.(anf_tw)

7. International Standards

7-1. Safety

a) UL 60950-1, Underwriters Laboratories Inc.
Information Technology Equipment - Safety - Part 1 : General Requirements.
b) CAN/CSA-C22.2 No. 60950-1-07, Canadian Standards Association.
Information Technology Equipment - Safety - Part 1 : General Requirements.
c) EN 60950-1, European Committee for Electrotechnical Standardization (CENELEC).
Information Technology Equipment - Safety - Part 1 : General Requirements.

7-2. EMC

a) ANSI C63.4 "American National Standard for Methods of Measurement of Radio-Noise Emissions from Low-Voltage Electrical and Electronic Equipment in the Range of 9 kHz to 40 GHz." American National Standards Institute (ANSI), 2003.
b) CISPR 22 "Information technology equipment – Radio disturbance characteristics – Limit and methods of measurement." International Special Committee on Radio Interference (CISPR), 2005.
c) CISPR 13 "Sound and television broadcast receivers and associated equipment – Radio disturbance characteristics – Limits and method of measurement." International Special Committee on Radio Interference (CISPR), 2006.

Confidential
ANF ANF Technology co.,Ltd.(anf_tw)
2016.05.25 11:46 ANF

7-3. Environment

a) RoHS, Directive 2011/65/EU of the European Parliament and of the council of 8 June 2011

2016.05.25 11:46 ANF ANF Technology co.,Ltd.(anf_tw)

8. Packing

8-1. Designation of Lot Mark

a) Lot Mark

A	B	C	D	E	F	G	H	I	J	K	L	M

A,B,C : SIZE(INCH)
D : YEAR
E : MONTH
F ~ M : SERIAL NO.

Note

1. YEAR

Year	2011	2012	2013	2014	2015	2016	2017	2018	2019	2020
Mark	A	B	C	D	E	F	G	H	J	K

2. MONTH

Month	Jan	Feb	Mar	Apr	May	Jun	Jul	Aug	Sep	Oct	Nov	Dec
Mark	1	2	3	4	5	6	7	8	9	A	B	C

b) Location of Lot Mark

Serial No. is printed on the label. The label is attached to the backside of the LCD module.
This is subject to change without prior notice.

2016.05.25 11:46 ANF ANF Confidential ANF Technology co.,Ltd.(anf_tw)

8-2. Packing Form

a) Package quantity in one box : 14 pcs

b) Box Size : 365 X 315 X 570mm

2016.05.25 11:46 ANF ANF Technology co.,Ltd.(anf_tw)

9. PRECAUTIONS

Please pay attention to the followings when you use this TFT LCD module.

9-1. MOUNTING PRECAUTIONS

(1) You must mount a module using holes arranged in four corners or four sides.
(2) You should consider the mounting structure so that uneven force (ex. Twisted stress) is not applied to the module. And the case on which a module is mounted should have sufficient strength so that external force is not transmitted directly to the module.
(3) Please attach the surface transparent protective plate to the surface in order to protect the polarizer. Transparent protective plate should have sufficient strength in order to the resist external force.
(4) You should adopt radiation structure to satisfy the temperature specification.
(5) Acetic acid type and chlorine type materials for the cover case are not desirable because the former generates corrosive gas of attacking the polarizer at high temperature and the latter causes circuit break by electro-chemical reaction.
(6) Do not touch, push or rub the exposed polarizers with glass, tweezers or anything harder than HB pencil lead. And please do not rub with dust clothes with chemical treatment.
Do not touch the surface of polarizer for bare hand or greasy cloth.(Some cosmetics are detrimental to the polarizer.)
(7) When the surface becomes dusty, please wipe gently with absorbent cotton or other soft materials like chamois soaks with petroleum benzene. Normal-hexane is recommended for cleaning the adhesives used to attach front / rear polarizers. Do not use acetone, toluene and alcohol because they cause chemical damage to the polarizer.
(8) Wipe off saliva or water drops as soon as possible. Their long time contact with polarizer causes deformations and color fading.
(9) Do not open the case because inside circuits do not have sufficient strength.
(10) As The IPS panel is sensitive & slim, please recommend the metal frame of the system supports the panel by the double side-mount.

9-2. OPERATING PRECAUTIONS

(1) The spike noise causes the mis-operation of circuits. It should be lower than following voltage :
V=±200mV(Over and under shoot voltage)
(2) Response time depends on the temperature.(In lower temperature, it becomes longer.)
(3) Brightness depends on the temperature. (In lower temperature, it becomes lower.)
And in lower temperature, response time(required time that brightness is stable after turned on) becomes longer.
(4) Be careful for condensation at sudden temperature change. Condensation makes damage to polarizer or electrical contacted parts. And after fading condensation, smear or spot will occur.
(5) When fixed patterns are displayed for a long time, remnant image is likely to occur.
(6) Module has high frequency circuits. Sufficient suppression to the electromagnetic interference shall be done by system manufacturers. Grounding and shielding methods may be important to minimized the interference.
(7) Please do not give any mechanical and/or acoustical impact to LCM. Otherwise, LCM can't be operated its full characteristics perfectly.
(8) A screw which is fastened up the steels should be a machine screw.
(if not, it causes metallic foreign material and deal LCM a fatal blow)
(9) Please do not set LCD on its edge.
(10) Yogore, image sticking can not be guarantee.

2016.05.25 11:46 ANF ANF Technology co.,Ltd.(anf_tw) Confidential

2016.05.25 11:46 ANF ANF Technology co.,Ltd.(anf_tw)

9-3. ELECTROSTATIC DISCHARGE CONTROL

Since a module is composed of electronic circuits, it is not strong to electrostatic discharge. Make certain that treatment persons are connected to ground through wrist band etc. And don't touch interface pin directly.

9-4. PRECAUTIONS FOR STRONG LIGHT EXPOSURE

Strong light exposure causes degradation of polarizer and color filter.

9-5. STORAGE

When storing modules as spares for a long time, the following precautions are necessary.

(1) Store them in a dark place. Do not expose the module to sunlight or fluorescent light. Keep the temperature between 5°C and 35°C at normal humidity.
(2) The polarizer surface should not come in contact with any other object.
It is recommended that they be stored in the container in which they were shipped.

9-6. HANDLING PRECAUTIONS FOR PROTECTION FILM

(1) The protection film is attached to the bezel with a small masking tape.
When the protection film is peeled off, static electricity is generated between the film and polarizer.
This should be peeled off slowly and carefully by people who are electrically grounded and with well ion-blown equipment or in such a condition, etc.
(2) When the module with protection film attached is stored for a long time, sometimes there remains a very small amount of glue still on the bezel after the protection film is peeled off.
(3) You can remove the glue easily. When the glue remains on the bezel surface or its vestige is recognized, please wipe them off with absorbent cotton waste or other soft material like chamois soaked with normal-hexane.

2016.05.25 11:46 ANF Confidential ANF Technology co.,Ltd.(anf_tw)

2016.05.25 11:46 ANF ANF Technology co.,Ltd.(anf_tw)